Biological Services Program

FWS/OBS-81/22
September 1981

MANAGING OIL AND GAS ACTIVITIES IN COASTAL ENVIRONMENTS: REFUGE MANUAL

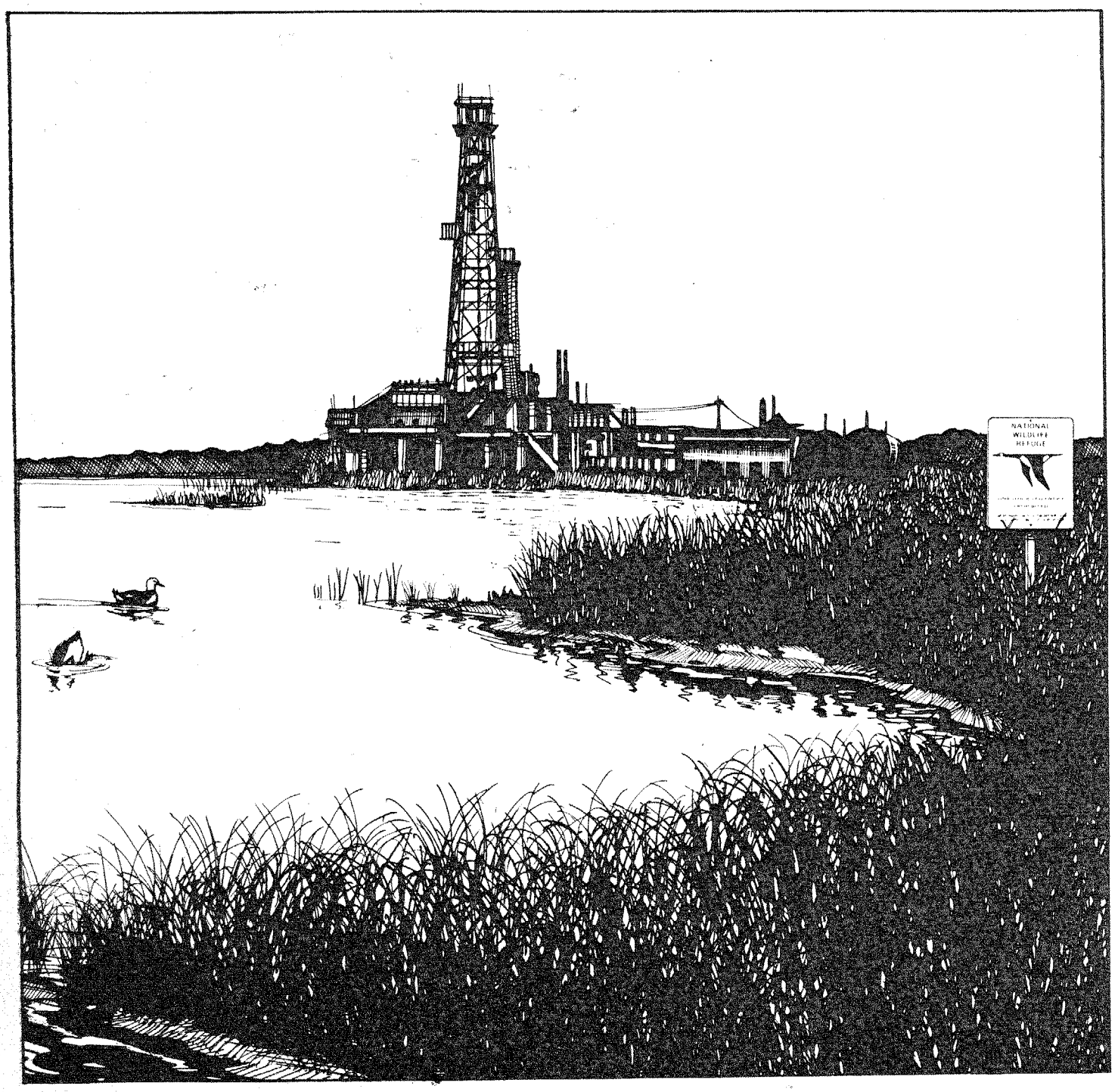

Fish and Wildlife Service

U.S. Department of the Interior

NATIONAL COASTAL ECOSYSTEMS TEAM
U. S. FISH AND WILDLIFE SERVICE
NASA-Slidell Computer Complex
1010 Gause Boulevard
Slidell, LA 70458

The Biological Services Program was established within the U.S. Fish and Wildlife Service to supply scientific information and methodologies on key environmental issues that impact fish and wildlife resources and their supporting ecosystems. The mission of the program is as follows:

- To strengthen the Fish and Wildlife Service in its role as a primary source of information on national fish and wildlife resources, particularly in respect to environmental impact assessment.
- To gather, analyze, and present information that will aid decisionmakers in the identification and resolution of problems associated with major changes in land and water use.
- To provide better ecological information and evaluation for Department of the Interior development programs, such as those relating to energy development.

Information developed by the Biological Services Program is intended for use in the planning and decisionmaking process to prevent or minimize the impact of development on fish and wildlife. Research activities and technical assistance services are based on an analysis of the issues, a determination of the decisionmakers involved and their information needs, and an evaluation of the state of the art to identify information gaps and to determine priorities. This is a strategy that will ensure that the products produced and disseminated are timely and useful.

Projects have been initiated in the following areas: coal extraction and conversion; power plants; geothermal, mineral and oil shale development; water resource analysis, including stream alterations and western water allocation; coastal ecosystems and Outer Continental Shelf development; and systems inventory, including National Wetland Inventory, habitat classification and analysis, and information transfer.

The Biological Services Program consists of the Office of Biological Services in Washington, D.C., which is responsible for overall planning and management; National Teams, which provide the Program's central scientific and technical expertise and arrange for contracting biological services studies with states, universities, consulting firms, and others; Regional Staffs, who provide a link to problems at the operating level; and staffs at certain Fish and Wildlife Service research facilities, who conduct in-house research studies.

788813

U.S. FISH & WILDLIFE
National Wetlands
NASA - Slidell Computer
1010 Gause Boulevard
Slidell, LA 70458

FWS/OBS-81/22
August 1981

MANAGING OIL AND GAS ACTIVITIES IN COASTAL ENVIRONMENTS: REFUGE MANUAL

by

William L. Longley, Rodney Jackson, and Bruce Snyder
RPC, Inc.
1705 Guadalupe
Austin, Texas 78701

Contract No. 14-16-0008-2152

Project Officer

Richard A. Wade
Coastal Ecosystem Activities Leader
U.S. Fish and Wildlife Service
Albuquerque, New Mexico 87103

Performed for

Coastal Ecosystems Project
Office of Biological Services
Fish and Wildlife Service
U.S. Department of the Interior
Washington, D.C. 20240

DISCLAIMER

The opinions, findings, conclusions, or recommendations expressed in this report/product are those of the authors and do not necessarily reflect the views of the Biological Services Program, Fish and Wildlife Service, U.S. Department of the Interior, nor does mention of trade names or commercial products constitute endorsement or recommendation for use by the Federal Government.

This manual should be cited as:

Longley, W.L., R. Jackson, and B. Snyder. 1981. Managing oil and gas activities in coastal environments: refuge manual. U.S. Fish and Wildlife Service, Office of Biological Services, Washington, D.C. FWS/OBS-81/22.

PREFACE

The refuges on the coast of the Gulf of Mexico contain some of the most productive marsh and estuarine systems for fish and wildlife in the Nation. Many of the refuges support a wide variety of land-use practices and have a history of oil and gas activities. Energy development, not only on the refuges, but also on adjacent lands and waters, and on the Outer Continental Shelf (OCS), will place additional stress on the refuges; therefore, it is necessary to devise methods and standards of operation to minimize impacts of the energy development program.

The objective of this study was to develop a report which describes and documents the management of oil and gas development on wildlife refuges along the Louisiana and Texas coasts through an analysis of guidelines, standards, and stipulations imposed on development activities in these areas. The report will also assist land managers and other decisionmakers in planning and managing oil and gas development on other public lands; it will help them prepare and review environmental impact statements and permits.

This refuge manager's manual is the third of three products. The first is a comprehensive technical report (printed in limited number for refuge managers) that describes and evaluates former and present practices on wildlife refuges to prevent and alleviate adverse impacts of oil and gas operations. The second product is a 66-page illustrated handbook, intended as an introductory reference that briefly highlights the activities and impacts associated with oil and gas development.

The refuge manager faced with decisions about petroleum development on his lands needs additional and more detailed information than is present in the handbook. On the other hand, the long-report is comprehensive and bulky, containing information essential to the study itself but not crucial for refuge management decisions. In recognition of these facts, the extended report has been condensed into a manager's manual, the third product. Four categories of information have been removed:

1) Ecosystems Diagrams (ESD's) - The analyses in this study were based on ecosystem diagrams, with on base diagram constructed for each coastal ecosystems type (coastal uplands, salt marsh, brackish marsh, fresh marsh,

Determining the Effects of Petroleum Development

A complete description of typical industry oil and gas practices was developed by observation and literature review. Differences in practices resulting from stipulated methods and standards on refuges were compiled from refuge records.

Probable effects of typical industry practices were analyzed for each phase of oil and gas development (preexploration, site access, site preparation and operation, placement and operation of production facilities, installation and maintenance of lines, spills and cleanup, and site shutdown and restoration). The analysis was made by using the ecosystems diagram for each ecosystem (coastal grasslands, brush-grass complex, maritime forest, salt marsh, brackish marsh, fresh marsh, delta marsh, and levee and spoil bank). Based on known relationships within ecosystems and the type of activity, its magnitude and duration, impacts were qualitatively predicted.

Analysis of Protective Measures

The protective measures used on refuges were assessed by contrasting them with potential impacts identified by the impact analysis. Protective measures were judged adequate or inadequate. In the latter case, modifications of the protective measures were suggested where necessary. In a few instances, no protective measures were utilized where a significant impact was potentially possible. Here proposed stipulations were suggested to alleviate the problem.

RESULTS OF THE STUDY

A wide variety of measures have been used to protect national wildlife refuge lands. Most of these methods have resulted from observation and experimentation by refuge managers. Particular site-specific conditions often dictated the necessary protective measures. However, legal circumstances often have determined the actual degree of compliance that may be required, and thus the success in protecting fish and wildlife habitat.

Refuge (land) managers must make their management decisions on a case-by-case basis, without overall development plans for an area. However, the most severe impacts are the result of incremental change on a scale larger than the individual site or project. These impacts may be independent of refuge oil and gas activities.

EXECUTIVE SUMMARY

Coastal wildlife refuges provide habitat for many species, particularly migratory waterfowl and numerous endangered species. In addition, refuge lands contribute energy, organic matter, water, sediment, and biota to nearby ecosystems. These contributions from adjacent aquatic, shoreland, and upland areas are necessary to allow continued functioning of coastal ecological systems.

In many coastal areas, oil and gas may be found in commercial quantities under large tracts of land, including refuges. Because of the legal circumstances of mineral leasing and reservation, many land owners, including the Federal Government, do not have complete control over the uses of their land. They have had to deal with oil and gas operations for many years. Additionally, because of the proximity to the coast, many land holdings have had pipeline crossings resulting from coastal oil and gas or OCS development.

PURPOSE OF THE STUDY

A study was undertaken to determine the impacts of all aspects of oil and gas development upon coastal ecological systems and to assess the safeguards used in protecting refuge lands. Wildlife refuges along the coasts of Texas and Louisiana were selected for intensive study. These refuges were characterized by (1) a diversity of ecosystems, (2) oil exploration, extraction, and transport, and (3) oil and gas development periods of varying durations.

METHODOLOGY

Site visits were made to (1) catalog the types of oil and gas activities that take place on refuges and nearby off-refuge control sites, (2) determine impacts, (3) collect information concerning ecosystems, and (4) inspect refuge records regarding protective measures taken. Ecosystem models (diagrams) were made for the refuges that have oil and gas development occurring within them.

delta marsh, levees and spoil banks). In particular, the impacts of each oil and gas development activity were discussed in Chapter 6 of the technical report with the aid of the appropriate base diagram, showing specific impact pathways as boldened lines, and with a relatively lengthy section on "Attribute Alterations". The base diagrams, used in Chapter 3 in describing the dynamics of the six coastal ecosystems, were retained for this manual. The impact diagrams presented in Chapter 6 were removed.

2) Analyses of stipulations - also presented in Chapter 6, along with the discussion of each development activity and associated ecological impacts, was an analysis of existing stipulations used on the five National Wildlife Refuges covered in the study. Where appropriate, the existing stipulations were modified, and where necessary, new stipulations were proposed. While it is instructive to compare standards in their current wordings with more effective modified forms, such an analysis is not crucial for the refuge manager. Chapter 7 is a summary of the most useful existing, modified, and proposed stipulations.

3) Other information regarding stipulations - an appendix contained lists of the existing stipulations and their sources. Again, reasoning that the refuge manager would not often require these sources, this information was removed for the purpose of conserving space.

4) Miscellaneous information - In other instances, information not essential to refuge management was excluded.

The extended technical report has been printed in limited numbers and is accessible to refuge managers and interested organizations. Managers are encouraged to make use of the long version, in particular the ecosystem diagrams that graphically show how the impacts wrought by oil and gas activities track the pathways between components in coastal ecosystems.

The reader will note that some of the information in this manual, particularly in Chapters 6 and 7, is repeated, either within an ecosystem type or across types. This manual is intended to be a useful reference, in which specific information is easily accessible. Information blocks have been repeated where necessary to avoid time-consuming cross-referencing and page-jumping. The same organizational format has been used throughout, and corresponds to the format in both the long report and the handbook.

For information contact: Information Transfer Specialist
National Coastal Ecosystems Team
U.S. Fish and Wildlife Service
1010 Gause Blvd.
Slidell, LA 70458

TABLE OF CONTENTS

	Page
PREFACE	iii
EXECUTIVE SUMMARY	v
LIST OF FIGURES	xii
LIST OF ABBREVIATIONS	xiii
ACKNOWLEDGMENTS	xiv
1. INTRODUCTION	1
The National Wildlife Refuge System	1
Petroleum Development on the Gulf Coast	1
Ownership and Surface Rights	3
Federally Owned Oil and Gas	3
Excepted Oil and Gas	3
Reserved Oil and Gas	4
Ownership Circumstances on National Wildlife Refuges	5
Management of Oil and Gas Activities	6
Permits	6
Role of the Refuge Manager	7
Purpose and Objectives of the Study	8
Project Methodology	8
Task 1, Case Study Sites	8
Task 2, Compilation and Synthesis of Environmental Data	8
Task 3, Description of Hydrocarbon Resource Extraction and Transport Operations	9
Task 4, Impact Assessment	9
Task 5, Evaluation of Safeguards	9
Task 6, Proposed Methods and Standards	10
Final Report	10
2. SELECTION OF REFUGES	11
Criteria for Selection	11
Institutional and Legal Considerations	11
Environmental Aspects and System Types	12
Actual Methods Used	12
Miscellaneous Differences	13

Page

Refuges Selected for Study 13

3. ECOSYSTEMS DESCRIPTIONS. 15
Use of Ecosystems Diagrams 15
Modeling the Systems 19
Coastal Uplands 20
Salt Marsh 32
Brackish Marsh 36
Fresh Marsh 42
Delta Marsh 47
Levees and Spoil Banks 50
National Wildlife Refuge Descriptions 55
Aransas National Wildlife Refuge 57
Brazoria and San Bernard National Wildlife Refuges 62
Delta National Wildlife Refuge 68
Sabine National Wildlife Refuge 72

4. HYDROCARBON RESOURCE EXTRACTION AND TRANSPORT METHODS 77
Introduction 77
Purpose 78
Overview of Phases of Oil and Gas Activities Found On and Off Refuges 78
Detailed Account of Typical Off-Refuge Oil and Gas Activities . . 83
Preexploration 84
Access to the Site 87
Site Preparation and Operation 93
Placement and Operation of Production Facilities 101
Petroleum Transportation 111
Oil and Gas Activities on Wildlife Refuges 122
Aransas National Wildlife Refuge 122
Brazoria National Wildlife Refuge 126
Delta National Wildlife Refuge 128
Sabine National Wildlife Refuge 131
San Bernard National Wildlife Refuge 135
Sources of Methods and Standards Required on Refuges 137

5. OVERVIEW OF IMPACTS ON ECOSYSTEM FUNCTION 138
Coastal Uplands 138
Marsh Ecosystems 139

6. ECOLOGICAL IMPACTS OF OIL AND GAS ACTIVITIES 143

Use of Ecosystem Diagrams for Impact Assessment 143
Development Activities 143
Primary Ecological Alterations 144
Ecosystems Analysis 146
Impact Assessment 148

Page

Systematic Impact and Methods Assessment 148
Coastal Uplands 149
Seismic Preexploration 149
Access to Site 152
Wellsite Preparation and Operation 156
Installation and Maintenance of Lines 160
Placement and Operation of Production Facilities 166
Spills and Cleanup 169
Site Shutdown and Restoration 172
Salt Marsh 175
Seismic Preexploration 175
Gravity Preexploration 177
Site Access by Leveed Road 179
Site Access by Canal and Wellsite Dredging 183
Wellsite Preparation and Operation for Leveed Marsh Floor Locations 187
Installation and Maintenance of Lines 191
Placement and Operation of Production Facilities 196
Spills and Cleanup 199
Site Shutdown and Restoration 202
Brackish Marsh 206
Seismic Preexploration 206
Gravity Preexploration 208
Site Access by Leveed Road 210
Site Access by Canal and Wellsite Dredging 214
Wellsite Preparation and Operation for Leveed Marsh-Floor Locations 218
Installation and Maintenance of Lines 221
Placement and Operation of Production Facilities 228
Spills and Cleanup 231
Site Shutdown and Restoration 235
Fresh Marsh 238
Seismic Preexploration 238
Gravity Preexploration 240
Site Access by Leveed Road 242
Site Access by Canal and Wellsite Dredging 245
Wellsite Preparation and Operation for Leveed Marsh-Floor Locations 249
Installation and Maintenance of Lines 251
Placement and Operation of Production Facilities 257
Spills and Cleanup 261
Site Shutdown and Restoration 265
Delta Marsh 268
Seismic Preexploration 268
Gravity Preexploration 270
Site Access by Canal and Wellsite Dredging 272
Dredged Wellsite Operation 276
Installation and Maintenance of Lines 277
Placement and Operation of Production Facilities 284
Spills and Cleanup 288
Site Shutdown and Restoration 291

Page

Levees and Spoil Banks 294
Seismic Preexploration 294
Gravity Preexploration 296
Site Access by Road 298
Site Access by Canal 298
Wellsite Preparation and Operation 301
Installation and Maintenance of Lines 303
Placement and Operation of Production Facilities 308
Spills and Cleanup 311
Site Shutdown and Restoration 313
7. SUMMARY OF SUCCESSFUL AND PROPOSED STIPULATIONS 316
Coastal Uplands 317
Seismic Preexploration 317
Access to Site 319
Wellsite Preparation and Operation 320
Installation and Maintenance of Lines 322
Placement and Operation of Production Facilities 324
Spills and Cleanup 326
Site Shutdown and Restoration 327
Salt Marsh 329
Seismic Preexploration 329
Gravity Preexploration 331
Site Access by Leveed Road 332
Site Access by Canal and Wellsite Dredging 333
Wellsite Preparation and Operation for Leveed Marsh-Floor Locations 334
Installation and Maintenance of Lines 336
Placement and Operation of Production Facilities 340
Spills and Cleanup 342
Site Shutdown and Restoration 344
Brackish Marsh 345
Seismic Preexploration 345
Gravity Preexploration 347
Site Access by Leveed Road 348
Site Access by Canal and Wellsite Dredging 351
Wellsite Preparation and Operation for Leveed Marsh-Floor Locations 352
Installation and Maintenance of Lines 354
Placement and Operation of Production Facilities 358
Spills and Cleanup 361
Site Shutdown and Restoration 363
Fresh Marsh 364
Seismic Preexploration 364
Gravity Preexploration 365
Site Access by Leveed Road 366

Page

Site Access by Canal and Wellsite Dredging 368
Wellsite Preparation and Operation for Leveed Marsh-Floor Locations 369
Installation and Maintenance of Lines 371
Placement and Operation of Production Facilities 374
Spills and Cleanup 377
Site Shutdown and Restoration 378
Delta Marsh 380
Seismic Preexploration 380
Gravity Preexploration 381
Site Access by Canal and Wellsite Dredging 382
Dredged Wellsite Operation 384
Installation and Maintenance of Lines 385
Placement and Operation of Production Facilities 388
Spills and Cleanup 391
Site Shutdown and Restoration 393
Levees and Spoil Banks 394
Seismic Preexploration 394
Gravity Preexploration 395
Site Access by Canal 396
Wellsite Preparation and Operation 398
Installation and Maintenance of Lines 399
Placement and Operation of Production Facilities 402
Spills and Cleanup 403
Site Shutdown and Restoration 404

REFERENCES 407

APPENDIXES
A. Activities Associated with Oil and Gas Exploration and Production 420
B. List of Common and Scientific Names Used in Text 439

GLOSSARY 443

LIST OF FIGURES

Number		Page
3-1	Modules of the energy circuit language	18
3-2	Ecosystems diagram of the maritime woodand	24
3-3	Ecosystems diagram of the coastal grassland	28
3-4	Ecosystems diagram of the brush-grass complex	30
3-5	Ecosystems diagram of the salt marsh	33
3-6	Ecosystems diagram of the brackish marsh	38
3-7	Ecosystems diagram of the fresh marsh	43
3-8	Ecosystems diagram of the delta marsh	48
3-9	Ecosystems diagram of levees and spoil banks	51
3-10	Refuge/ecosystem matrix	56
6-1	Potential primary ecological alterations resulting from petroleum development activities	145

LIST OF ABBREVIATIONS

API	American Petroleum Institute
BLM	Bureau of Land Management
BSFW*	Bureau of Sport Fisheries and Wildlife
CFR	Code of Federal Regulations
cm	Centimeter
ESD	Ecosystems Diagram
FWS*	Fish and Wildlife Service
g	Gram
HMC	Harris-Morey-Clodine soil association
km	Kilometer
l	Liter
m	Meter
MP	Miller-Pledger soil association
msl	Mean sea level
NWR	National Wildlife Refuge
NWRS	National Wildlife Refuge System
OCS	Outer continental shelf
PEA	Primary Ecological Alteration
PM	Pledger-Miller soil association
ppt	Parts per thousand
ROW	Right-of-way
sp., spp.	Species; singular, plural
USACE	United States Army Corps of Engineers
USDA	United States Department of Agriculture
USDC	United States Department of Commerce
USDI	United States Department of the Interior
USDT	United States Department of Transportation
USFWS	United States Fish and Wildlife Service
USGS	United States Geological Survey
WPA	Works Progress Administration

* Agency abbreviation in some documents previous to official redesignation of agency name.

ACKNOWLEDGMENTS

We wish to acknowledge the assistance of several persons in conducting this study. Andrew Reed and Alan Dutton helped with conceptual ideas, geologic interpretation, and experience in impact assessment. Steve Minick and Denise Girrard provided aid in finding literature, maps, and information, as well as organizing tables and drafting figures. Nancy Grona was technical editor and coordinated all aspects of producing the technical report.

We are particularly grateful to the many refuge managers and staff who provided information for this project. We particularly would like to thank: Frank Johnson and the staff of the Aransas National Wildlife Refuge; Larry Ivy and the staff of the Brazoria and San Bernard National Wildlife Refuges; Ted Clark and Charles Stutzenbaker of Texas Parks and Wildlife Department; John Walther and the staff of the Sabine National Wildlife Refuge; Alan Ensminger and Ted Joanen of Louisiana Wildlife and Fisheries Commission; and Cecil McMullen and the staff of the Delta National Wildlife Refuge.

We would also like to thank Larry Shanks, Vic Kay, and Tom Smith of the U.S. Fish and Wildlife Service for their assistance, and Richard Wade who served as Project Officer for the Office of Biological Services. Finally, we thank Larry Lodwick of Texas Parks and Wildlife Department, who lent essential literature, and Gary Austin and his associates of the Atlantic Richfield Company, who provided information concerning petroleum industry practices.

This report was submitted in fulfillment of Contract No. 14-16-008-2152 by RPC, Inc., under the sponsorship of the Coastal Ecosystems Project, National Coastal Ecosystems Team, Office of Biological Services, U.S. Fish and Wildlife Service. Work was completed as of 29 November 1977. Subsequent review and editing were performed by Timothy Sipe and Jill Parker of the Coastal Team.

1. INTRODUCTION

THE NATIONAL WILDLIFE REFUGE SYSTEM

The National Wildlife Refuge System (NWRS) originated in 1903 with the designation of Pelican Island, Florida, as a preserve and breeding ground for native birds. The refuge program grew slowly until 1934. Then, the Bureau of Biological Survey of the Department of Agriculture, at the urging of the President, gathered some key experts and formulated a plan for acquisition of refuges for wildlife and waterfowl. The plan included significant funding from land-retirement, special, and Works Progress Administration rehabilitation funds.

In short order, the refuge program included a number of migratory waterfowl refuges, including the Delta (1935), Sabine (1937), and Lacassine (1937) National Wildlife Refuges (NWR) in Louisiana, and the Aransas NWR (1937) in Texas.

In 1939, the Bureau of Biological Survey was transferred to the Department of the Interior and became the U.S. Fish and Wildlife Service (USFWS). Since then, four other coastal refuges have been established on the Texas coast: Laguna Atascosa (1946), Anahuac (1963), Brazoria (1966), and San Bernard (1968) NWR. As of 1976, there were 397 NWR units comprising more than 13,770,000 ha (34,000,000 acres) in the refuge system.

PETROLEUM DEVELOPMENT ON THE GULF COAST

The petroleum industry on the gulf coast began at almost the same time as the refuge system. The Spindletop field near Beaumont was established in 1901 by the drilling of a 100,000-barrel/day gusher. In 1902, development of South Louisiana's petroleum industry began with drilling at Jennings. Petroleum development took place at a moderate pace near the coast, but it was not until the 1930's that development expanded onto refuge marsh areas in Louisiana. Davis (1973) attributed this delay to the development of equipment and techniques necessary to explore for minerals in coastal marshes. The equipment that was needed was a submerisble drilling barge that could be floated to the drilling

site via canal and sunk in a few meters of water. There, sediments with low bearing strengths could support the weight of the drilling structure and drill string.

By 1937 the industry had moved into the open Gulf of Mexico. The first offshore well was located 1.5 km (1 mi) offshore and about 16 km (3.6 mi) east of the mouth of Lake Calcasieu (Gusey and Maturgo, 1972). This location was less than 9 km (5.4 mi) from the East Cove area of the Sabine NWR.

In Louisiana, there was drilling and production on the lands that became the Sabine Refuge more than three yr before the area was formally acquired (Jemison, 1966). According to refuge records, two wells were drilled and were in production by April 1936. After the refuge was acquired, drilling did not begin again until after World War II. To date, more than 25 wells have been drilled, though only about 7 are currently producing.

On the Delta Refuge, activities associated with exploration began in late 1940, and the first drilling took place in 1941. By April of 1942, three wells had been drilled and more were planned. Since then, more than 200 wells have been drilled on the refuge and more than half of them are currently in production.

In Texas, oil and gas production proceeded in the coastal region. In January 1940, the first well as drilled on the Aransas NWR (McNulty, 1966). Here, nearly all of the development took place in upland areas, and to date there have been more than 60 wells drilled, the most recent in 1977. Nearly half of these wells are currently producing.

Oil and gas activity predates refuge creation of both the Brazoria and San Bernard Refuges. The first well was drilled on Brazoria Refuge land in 1952. There have been at least 15 wells drilled on the property, though only 3 have been drilled since the land became a refuge. None of these wells, however, are currently productive.

On San Bernard Refuge land, the first recorded well was drilled in 1936. There have been at least 18 wells drilled on the San Bernard Refuge, though only 3 have been undertaken since the area was purchased. All the latter wells have been dry, and today there is no production on this refuge.

On some refuges, the oil and gas activities are extensive. On the Aransas Refuge there are many producing wells; yet the casual visitor is unaware of this activity. Only by driving in the refuge interior does one see evidence of oil and gas operations. Even then, the impression is that the effects are minor. The Delta Refuge, however, is criss-crossed with canals, pipelines, and flowlines; numerous wellsites and production facilities are scattered thourghout the refuge. The maze and extent of canals is apparent, and one

wonders what the effects of these changes are upon the entire marsh system. Officials of the USFWS have estimated that more than 18 percent of the refuge's 19,764 ha (48,799 acres) "have been substantially modified by extensive criss-crossing of access canals" (Gusey and Maturgo, 1972).

In most instances, the right to explore for and produce petroleum on refuge land has been beyond the control of the USFWS. Oil and gas development has proceeded on wildlife refuges as a result of circumstances of land ownership.

OWNERSHIP AND SURFACE RIGHTS

The legal question regarding ownership is very complicated. In brief, however, there are three circumstances that are found in coastal refuges: Federal ownership, excepted oil and gas, and reserved oil and gas.

Federally Owned Oil and Gas

Federal ownership of oil and gas in refuges does not occur very often. In a few cases, however, there is complete ownership of all land interests - termed "fee simple absolute" - of at least some of the land tracts making up a refuge. This land may be leased for minerals when the U.S. Geolgocial Survey (USGS) has determined that the lands are subject to "drainage" (43 CFR 3103.3-1). This term refers to the loss of petroleum from formations tapped by oil and gas wells on adjacent lands. Otherwise, no leases for oil and gas may be made on wildlife refuge lands where the U.S. Government owns all oil and gas interests (43 CFR 3103.3-3).

Where a determination is made by the USGS that lands are subject to drainage, the lands may be leased by competitive bid, and petroleum development may proceed under the direction of the USFWS and the Bureau of Land Management (BLM). Use of the surface lands by the petroleum exploration company is then subject to the terms of the lease and the normal rights of ownership. On the Sabine NWR, the U.S. Government believes it owns all land interests in the East Cove unit, but the area's status is in litigation with a private mineral owner. On the Delta NWR, the U.S. Government owns all interests on the western portion of the refuge, and currently is leasing the oil and gas rights.

Excepted Oil and Gas

In many instances, a land owner may divide interests in his land as he sees fit. For example, he may sell or lease his oil and gas interests (commonly called the mineral estate). Separation of the oil and gas mineral estate may be accomplished by an agreement with a third party, or by retaining ownership of the minerals in a conveyance of the rest of the land (Hemingway, 1971). For example, in 1924 the Texas Company sold the surface lands down to 61 m (200 ft) on what was later to become the Sabine NWR to the Orange-Cameron Land

Company. When the Sabine Refuge was acquired in 1937 by decree of a U.S. District Court, the U.S. Government acquired only the surface rights and none of the minerals or land lying below 61 m. Thus, the oil and gas under a large portion of the refuge is excepted from refuge ownership and control.

Likewise, on the Aransas, Brazoria, Delta, and San Bernard Refuges, oil and gas interests on some of the tracts were leased for various periods to individuals or exploration companies. When these tracts were purchased by the U.S. Government, the terms of the preexisting leases had to be honored. Leases were often made for a duration of 20 or 30 yr. However, they usually contained a clause allowing the lease to remain in effect beyond this primary term as long as oil or gas was being produced from the land. Indeed, even if the primary term expired and no oil or gas was being produced, there was usually a clause in the agreement keeping the lease in force so long as drilling operations were being conducted in good faith on the land. If production resulted from such operations, then the lease would remain in force.

For wildlife refuges, the result of excepted oil and gas may be that minerals under a refuge are either owned by another party or are controlled through a long-term lease by a third party. The significance of this situation becomes apparent when the rights to surface access of the mineral owner/lessee are examined. In virtually all legal jurisdictions, it is agreed that oil and gas ownership or lease, in the absence of language to the contrary, gives an exclusive right to enter the land, conduct exploratory drilling, and extract oil and gas until the reserves are exhausted. In addition, unless specifically prohibited in terms of a lease, the owner/lessee of the minerals may use or occupy as much of the surface as is reasonably necessary and convenient for mineral exploration and development. Furthermore, the owner/lessee may occupy or use the surface for these purposes even to the preclusion of any other surface possession whatsoever (Hemingway, 1971).

Reserved Oil and Gas

A reservation is a clause in a conveyence, such as a deed, that returns to the seller or grantor a right, service, or good from the property sold to the buyer or grantee. A common use of this device is to reserve minerals in a land sale for later use by the original owner, his heirs, or assigns. There is a shade of difference between the cases of minerals being excepted and those being reserved. For the former, the minerals are withdrawn from consideration in a later land transaction, either permanently or until a lease agreement expires. For the latter, the seller or grantor conveys the land to the buyer or grantee but makes particular conditions concerning the sale. He reserves the right to enter the land, explore, extract, and reap the benefits of sale of the minerals for a period of time. This period may be a specific number of years, though 20 or 30 is common, or it may be in perpetuity. In cases of limited duration of reservation, a clause similar to the one previously described for leases is usually found, allowing the reservation to continue as long as oil and gas is being produced.

Reservations are often used in conjunction with exceptions. Thus, on many of the refuges, the sellers of the land to the U.S. Government reserved the oil and gas for themselves, both where they had not leased the minerals and where they had.

Ownership Circumstances on National Wildlife Refuges

Courts have disregarded the subtle distinction between exception and reservation and have focused on the intent in either case to retain and control the mineral estate by the seller (Hemingway, 1971). The net result of these conditions of ownership is that holders of exceptions, leases, reservations, etc. have developed a clear set of legal precedents giving them the right to sell, lease, explore, and extract oil and gas. Furthermore, in most instances they may utilize the surface lands in nearly any way they see fit in pursuit of these ends, often for as long as there is oil and gas to be extracted.

In the case of federally owned oil and gas, the U.S. Government has absolute control over development. Either it is not allowed, or it is allowed through a restrictive lease and with on-site direction by officials, including refuge management. However, Federal ownership of refuge oil and gas is rare.

More frequently, minerals are leased to a third party and in the same agreement are reserved by the seller for himself. In this case, the refuge has minimal authority as the surface owner since the lease predates the purchase agreement. General State and Federal environmental regulations and laws are still applicable, however. The same holds true if the minerals are actually owned by a different party and the owner develops the oil and gas resources himself (e.g., as in the Sabine Refuge).

If, however, the owner or person reserving the minerals leases the oil and gas after the purchase agreement is made (barring specific contract clauses to the contrary), the lessee will be subject to apply for and receive permits with stipulations consistent with deed clauses. The lessee cannot be prohibited from exploring for and producing oil and gas, but he may be required to fulfill certain stated conditions in the process.

Consequently, if it is known that minerals exist in commercial quantities under refuge lands, it is almost certain that attempts will be made to extract and develop them at some time. If the minerals are federally owned, the USFWS will have considerable control over developmental actions. If the minerals are excepted or reserved, however, the ability to manage the mineral development to protect or promote other land uses may range from a moderate amount of authority to almost no control.

A statement in many judgements concerning use of surface lands declares that the mineral owner or lessee may occupy as much of the surface as is "necessary and convenient" for his purposes. Through precedent, it has been

established that roads, levees, canals, seismic operations, drilling rigs, drilling operations, production facilities, production operations, storage facilities, flowlines, and pipelines off the refuge to carry petroleum products for sale constitute uses of the surface that are "necessary and convenient" for the enjoyment of oil and gas exceptions and reservations. Other uses, however, may not fall into this category. Consequently, the USFWS may have sufficient authority as surface owner to regulate these other uses. Pipelines leading into and across refuges, but not emanating from operations on the refuge, are a case in point. The USFWS does have the authority to regulate these pipelines so that they cause a minimum of disruption and destruction to the refuge.

MANAGEMENT OF OIL AND GAS ACTIVITIES

Where minerals are "outstanding" (excepted), the USFWS has a limited ability to manage surface oil and gas activities. The refuge manager is responsible for assuring that there is a legal right to enter for oil and gas operations and for maintaining close cooperation with the operator to minimize disturbance and damage. He also sees that conditions of prior leases or deeds are fulfilled from the viewpoint of refuge interests. In fact, one of the keys to successful management lies in the cooperation between the refuge manager and the operator. On many refuges where the USFWS has had little control due to circumstances of ownership, it has been the cooperation between manager and operator that has resulted in minimizing many potential impacts.

Permits

There are several types of permits given by the USFWS for oil and gas activities. For seismic operations, a special use permit is required. If the applicant is anyone other than the owner or lessee of the minerals, he is required to show proof of authorization from the mineral owner/lessee. Usually, the seismic operator or owner/lessee informs the refuge manager, and often the appropriate regional office, of intent to make a seismic survey. The refuge manager and regional office confer by phone or letter during which time the manager may give site-specific details concerning the route or special circumstances. They agree upon a set of stipulations to accompany the permit, and the regional office issues the permit. Usually, a fee is charged based on the number of shot holes drilled. The manager ensures that the terms of the permit are carried out by the applicant.

Permits are issued for other activities as well. Gravity-meter surveys follow the same sort of procedure described for seismic surveys. In some areas, canal use has required issuance of a permit by refuge managers. Access-road and drilling permits have been issued where the USFWS has had clear regulatory authority. For pipelines, two permits are usually issued. The first is a temporary permit for construction of the line. A temporary easement is granted in this permit, and a number of stipulations for the construction are detailed. A second permit is issued defining the operation right-of-way easement, duration of the easement, and stipulations for the operation of the pipeline.

It is nearly impossible to generalize about when permits are required and when they are not. Complexities of ownership require that each case be judged on its own peculiar circumstances. In nearly all cases, however, the pattern described for seismic permits is followed. When large-scale activities such as dredging, construction of levees, placement of wells and production equipment, and pipeline construction are proposed, there are often one or more meetings between company engineers and officials, regional office representatives, and the refuge manager to discuss placement, alternative proposals, and many details of the project. Sometimes site visits are made to familiarize the applicant with the area or to clarify particular conditions. These meetings serve as negotiating sessions where agreements are made on placement, construction methods, and many other aspects of the proposed project. Based on the results of those meetings and conferences between the manager and regional office, a permit may be issued with a list of stipulations. These stipulations are in essence the special requirements made of the applicant. They must be followed or fulfilled during his activities on the refuge.

Role of the Refuge Manager

During all of these proceedings, the refuge manager is the person in the middle. He is on-the-scene representing the USFWS and sees that the terms of the permit are fulfilled. More importantly, he is the resident expert concerning the refuge. Better than anyone else involved in the permit process, he knows the characteristics of the land, the sites, wildlife and waterfowl use of the area, and objectives for management of any specific place. When an application for a permit is made, he is the first (and sometimes only) judge of the effects of the activity on the site and surrounding areas. His opinions are sought by the regional office regarding both the potential impacts on the refuge environment and methods or alternatives that would lessen or eliminate the undesirable consequences of oil and gas activities.

Many of the methods and standards detailed in stipulations or communicated orally by refuge managers to oil and gas operators have evolved from experience. Specific problems have been identified by managers' observations of the effects of activities on the habitats they manage. Managers have suggested methods to lessen effects, many of which have been successful. They have communicated these ideas among themselves, to regional refuge system officials, and to the newer refuge employees that may become managers in the future.

Transfer of managers from one refuge to another may result in a manager unfamiliar with oil and gas development suddenly being faced with oil and gas management responsibilities. Furthermore, energy development, not only on the refuges but on adjacent water or land or on the continental shelf, may place additional activities on existing refuges or initiate new actions on refuges previously not exposed to the petroleum industry. Private lands or refuges may feel these activities as well. Consequently, land managers for refuges, other public lands, or private lands might find a review of oil and gas industry practices, critical factors and impacts associated with oil and gas development, and successful and proposed methods and standards useful in formulating criteria for their own specific problems.

PURPOSE AND OBJECTIVES OF THE STUDY

The purpose of this study is to provide land managers with information about oil and gas activities, their effects on the environment, and successful or proposed methods of alleviating or eliminating their undesirable effects in order to protect fish and wildlife resources and their supporting coastal habitats. The project objectives are as follows:

1. To describe and discuss the activities related to oil and gas development that are relevant to the objectives of this study

2. To determine catastrophic and chronic impacts upon the biota of the activities related to oil and gas resources exploitation

3. To identify, discuss, and evaluate any and all procedures or safeguards, whether purposeful or inadvertent, that protect or enhance fish and wildlife resources and their support systems during oil and gas development and production

4. To develop standards of operation and safeguards for protecting or mitigating impacts on fish and wildlife resources and their support systems on refuges and similar blocks of publicly owned lands during all phases of exploitation of oil and gas resources

PROJECT METHODOLOGY

The project was divided into six tasks, and each task was divided into subtasks. Each subtask was defined by a discrete series of steps and had an output that was either used in another task or was placed in the final report.

Task 1, Case Study Sites

Subtask 1:1, criteria and selection of study sites. There were 21 State and Federal refuges in the study area. Based on visits to six Federal and two State refuges, various criteria were recognized for selection of study sites. A list of these criteria was drawn up, and the study sites were selected jointly by the contractor and the USFWS.

Task 2, Compilation and Synthesis of Environmental Data

Subtask 2:1, control site selection. Control sites located near the refuges were identified based on similarity of ecosystems. Two types of control sites were found, those with oil and gas activities, and those without petroleum

development. The control site list provided input for Subtask 2:2 and for Task 3.

Subtask 2:2, description and modeling of ecosystems. For each ecosystem type, a literature search was made to find relevant scientific documentation of the structure and function of the ecosystem. The information was synthesized into an ecosystem diagram of each system, showing the functional relationships among the elements. These ecosystem models served as the analytical framework for the analysis in Task 4. They were representative of relatively unaltered ecosystems in the study areas.

Task 3, Description of Hydrocarbon Resource Extraction and Transport Operations

Subtask 3:1, control site oil and gas activities. Typical industry practices were determined by control site visits, literature search, and contact with industry representatives. The information served as input for Task 4.

Subtask 3:2, wildlife refuge oil and gas activities, regulations, and stipulations. Several trips were made to the refuge study areas. Refuge oil and gas activities were determined by site visits and refuge documentation. Regulations and stipulations were found by extensive search of refuge files, conversations with refuge personnel, and search of Federal regulations. Gathering of background material - memoranda, correspondence, maps, and project specifications - were especially useful in interpreting refuge activities and stipulations. The information was used as input to Task 5.

Task 4, Impact Assessment

Subtask 4:1, assessment of impact of typical oil and gas activities. An ecosystem-specific analysis was made for each oil and gas activity phase by applying specific information about the activity to an ecosystem diagram and interpreting the resulting system changes. The analysis included the following elements: review of the specific activity sequence; determination of primary ecological alterations; description of ecosystem attribute alterations (impacts); and identification of key attribute alterations, the most important ecosystem attribute changes. The analyses provided inputs to Task 5 and 6.

Task 5, Evaluation of Safeguards

Subtask 5:1, determination of satisfactory methods and standards. Past and present methods and standards used by refuges were examined in light of the identified impacts resulting from oil and gas activities from Subtask 4:1. Each phase of oil and gas activities for each ecosystem was examined separately. Analysis identified why a method was successful or why it was inadequate. Successful methods were noted, and the analysis provided input to Subtask 5:2 and to Task 6.

Subtask 5:2, modification of unsuccessful methods and standards. Unsuccessful methods were examined and modifications were made so that the method or standard was effective in protecting wildlife, habitats, and other ecosystem aspects. The analysis provided input to Task 6.

Task 6, Proposed Methods and Standards

Subtask 6:1, proposals for safeguards not currently addressed. Significant potential impacts of oil and gas activities not currently covered by refuge methods and standards were identified by comparing successful and modified methods and standards (Subtasks 5:1 and 5:2) with the potential attribute alterations resulting from oil and gas activities (Subtask 4:1). Each phase of oil and gas activities for each ecosystem was examined separately. Safeguards were proposed to specifically address attribute alterations not currently embraced by methods and standards.

Final Report

The final report was derived from Subtasks 1:1, 2:2, 3:1, 3:2, 4:1, 5:1, 5:2, and 6:1. Most of the report involves a description of oil and gas activities, description of past and present refuge methods and standards, examination of the impacts of oil and gas activities, and analysis, modification, and proposal of procedures to protect fish, wildlife, and habitat. Also included are sections describing the refuge selection criteria, the ecosystem models, the refuges themselves, and an overview of impacts. The final section is a compilation of successful, modified, and proposed methods and standards from the analysis. These should be considered as attempts to point out successful ideas, suggest improvements, and proposed additions where current procedures are wanting. In no way should the analysis or conclusions be considered as USFWS policy.

2. SELECTION OF RFFUGES

Criteria for selection of refuges fell into four categories: institutional and legal considerations, environmental aspects and system types, actual methods used, and miscellaneous differences. A brief discussion of these categories and a justification for selecting particular refuges follows.

CRITERIA FOR SELECTION

Institutional and Legal Considerations

Several different circumstances of ownership or control of refuge minerals exist on the Texas and Louisiana coasts. On most refuges, the surface rights are owned by the Federal Government while various mineral interests are held by another party. In some cases the other party may be an oil or gas corporation. More frequently, a person, estate, or land corporation holds a mineral reservation and leases the right to develop minerals to an exploration company. In a few cases, the mineral interests are owned by the government.

Ownership is important since, to a large extent, it determines the control (or perceived control) that the refuge system has over the development of oil and gas. In the case where the government does not control the minerals, it must grant access to the developer. At this point the situation becomes complex. A series of Federal and State laws and regulations are applicable to oil and gas development and to the auxiliary activities associated with development. In addition, there are different perceptions of how much regulatory authority the refuge system has over development.

There are differences in mission, operation, and staffing of the refuges under consideration. For instance, the Aransas NWR is intimately involved in the protection of the whooping crane, a rare and endangered species. The Refuge has a larger staff than most refuges because of its great popularity. Other refuges are more remote and operate with smaller staffs. The monitoring of petroleum activities is a function of the extent of activity, staff time available, and refuge size.

Environmental Aspects and System Types

The gulf coastal refuges have a wide geographic distribution from the mouth of the Mississippi to the Coastal Bend area of Texas. This includes a range of climates from humid subtemperate to subhumid subtropical. The ecosystems affected by oil and gas activities include maritime forest, coastal grassland, brush-grass transition area, salt marsh, brackish marsh, fresh marsh, and delta marsh, as well as levees and spoil banks. Most of the development of coastal refuge oil and gas in the U.S. has taken place in the marshes of Texas and Louisiana. In addition there has been much alteration of areas by dredging of channels, placement of spoil, and creation of new land.

The coastal areas of Louisiana and Texas have experienced extensive changes as a result of man's activities. One of the larger projects has been the Gulf Intracoastal Waterway. This canal parallels the entire coast, and possibly only the Delta Refuge has not been directly affected by it. In other areas, however, the dredging of this canal and the segmenting of marshes and bays with spoil has led to changes in waterflow and circulation patterns. This has ultimately resulted in alterations of the ecosystems as new balances of conditions are reached.

Other man-made activities which have had large-scale effects on the refuges include: drainage of marshlands; construction of flood control structures; construction of agricultural water control areas; dredging of major shipping lanes; channelization and "stabilization" of major river systems; and alteration of the patterns of natural"intermittent extremes," such as occasional flooding or fires, that were part of the functioning of many coastal ecosystems.

All of the refuges under consideration have been affected by these activities. In addition, natural phenomena have had large effects on the area. Hurricane Camille altered the Delta Refuge considerably. Other hurricanes may have contributed to changes in vegetation on the Sabine Refuge. Erosion and subsidence, two naturally occurring phenomena, were particularly evident at some Louisiana sites. These processes may be accelerated by man's activities.

The interplay of these natural and man-induced alterations produces large effects which can be measured against the results of oil and gas extraction.

Actual Methods Used

Differences were noted in some of the actual methods used in oil and gas operations. Some of the differences were due to contrasting ecosystems or environmental conditions. For example, some marsh soils have such low bearing strength that the only practical method of access is by canal. Roadways would not have the strength to support heavy vehicles.

Some differences were due to technological developments. Whereas most marshland pipelines were formerly laid by the flotation method, the development of equipment and techniques led to use of the "push" method in all but the softest marsh sediments. Development of high-capacity pumps allowed pipelines to be "jetted" into soft sediments that formerly were excavated by dredge.

The methods observed presented a range of techniques indicative of the variety of industry practices. Access to sites included land roadways, marine (dredged) sites, and a combination whereby vehicles were moved by barge to roadways built on marshes. One refuge offered a pipeline corridor leading across the land, with all pipelines within a lateral distance of a few hundred meters. Several types of pipeline-laying methods were used, including flotation, pushing, jetting, and the typical upland pipeline "spread." Marsh buggies on refuges in Texas tended to have large rubber tires; in Louisiana, nearly all marsh buggies were tracked vehicles.

Muds and drilling fluids were confined, sometimes in steel containers, barges, or earthen levees. Drillsites themselves consisted of shell pads, leveed marsh-floor locations, older elevated marsh locations, and marine locations. Waterflow and water circulation structures varied: small and large culverts, low wooden bridges, or no structures at all were at different sites. Various restorative measures ranged from none at all to complete restoration of natural contours and vegetation.

Numerous other practices were present in different forms, even within a single refuge. These included: canal orientation; herbicide use; revegetation techniques; orientation of overland access routes; use of former sites; methods of laying pipeline across canals; sedimentation control levees; bulkheading types; placement of tank batteries; seismic survey methods; dredge types; spoil placement; camouflage; site placement criteria; slant drilling; and secondary retaining levees.

Miscellaneous Differences

The refuges differed with respect to size, age, and extent of oil and gas activities. There was also variety in the accessibility of sites, records, and personal experience of the refuge managers with oil and gas activities on a particular refuge.

REFUGES SELECTED FOR STUDY

Based on the selection criteria discussed above, six wildlife refuges were chosen for intensive study. They were:

1. Aransas National Wildlife Refuge - Lying near the center of the Texas Coastal Bend, and encompassing 22,300 ha in parts of Aransas, Refugio, and

Calhoun Counties, the Aransas Refuge was selected as a study site for the coastal uplands ecosystem. The most desirable features of the Aransas Refuge were the upland sites and the amount of environmental information available.

2. Brazoria and San Bernard National Wildlife Refuges - Both the 4,040-ha Brazoria and 7,840-ha San Bernard Refuges lie in Brazoria County, Texas, due south of Houston; they were chosen as study sites because of their coastal marsh ecosystems. The Brazoria and San Bernard Refuges had some very interesting sites due to recent construction and evidence of a blowout accident. Additionally, there were very good control areas nearby.

3. Delta National Wildlife Refuge - The 19,750-ha Delta Refuge lies in Plaquemines Parish, Louisiana, 120 km southeast of New Orleans, on the east bank of the present Mississippi River delta. The refuge was chosen as an example of the delta marsh ecosystem. The Delta Refuge represented and extensive operation in a highly dynamic environment. The natural changes in this environment may have actually overwhelmed the effects of oil and gas development.

4. Sabine National Wildlife Refuge - The Sabine Refuge is located on the Texas-Louisiana border in the southwestern corner of Cameron Parish, Louisiana; it comprises 57,000 ha. The Sabine Refuge was selected to represent coastal wetland ecosystems. The Sabine Refuge represented a set of ecosystems very characteristic of the Louisiana coast. There was much activity, some of it very old, on this refuge. There were good control sites nearby and some interesting innovations, including pipeline corridors, trestles, marsh-buggy ramps, and combination sites.

These four refuges were all Federal holdings and represented a range of ecosystems, management techniques, climate, and differences in State law, age and size of refuge, various oil and gas developments, refuge missions, and mineral holdings.

3. ECOSYSTEMS DESCRIPTIONS

USE OF ECOSYSTEMS DIAGRAMS

The ecosystems diagram approach is a procedure that integrates a large amount of diverse information about a natural system into a graphic model. This model may then be used to predict impacts resulting from changes in the system. Collected information includes data about organisms, chemical and physical factors, substrates, morphology, hydrology, and natural processes of coastal areas. Any topic within these disciplines is complicated and it is only through substantial inquiry and continued synthesis of both new and old information that a better understanding of coastal environments results.

A relatively new discipline, "system" science, has been essential to this process. Individual small pieces concerning systems are fitted into a much larger context. With the advent of this systems approach, scientists are able to describe the operation of various complex natural systems that have been recognized for a long time as distinct entities. The ecosystems diagram is one application of the systems approach.

Each ecosystem is made up of a number of components: populations of organisms, chemical materials, substrates, and other parts. Each system has not only characteristics of its individual components but also characteristics that result from combinations and interactions of the components. A key realization regarding populations is that energy acquisition and use are basic to every organism. Physiological and morphological adaptations, day-to-day functioning, and evolutionary strategy are closely linked to the energy sources and stress in the natural system.

There is a network of connections between populations of species. The connections include the food web, for example, as well as complicated and subtle linkages with heat, salinity, sediment, fire, soil moisture, and other components.

In order to describe the complex network of the system, some common connecting link is needed. By using the first law of thermodynamics, we can express the link between components in units of energy flow. Thus, energy can serve as the required link.

With these concepts established, a system may be defined as an interacting, interdependent group of components functioning as a whole. External driving inputs are received, outputs are exported to other systems, and transformations of energy and storage of material or energy occur within the system. By knowing details of how each component operates and relations between components, the characteristics of the whole system may be described.

Ecosystems are complex. The large number of links and the different regulating factors make it difficult and often cumbersome to explain an ecosystem simply by a narrative description. Quantitative models are available for some systems or components thereof. These are excellent predictors of dynamic systems. However, it is difficult to visualize the systems that these models describe from a group of equations alone. Often, the model's greatest use in describing a system is through graphic presentation.

H.T. Odum (1967, 1971, 1972a, 1972b) suggested an energy circuit diagram language to allow the visualization of ecosystems. This tool shows graphically the same sorts of relationships among ecosystem components as are seen among the elements of electrical circuit diagrams or computer program flowcharts. While not a perfect representation of the system, the circuit diagram does allow conceptualization of system operation. Odum has extended this concept to simulation models on analog computers. The use of the energy circuit diagram language here, however, is not quantitative and will be limited to identification of important components and characterization of possible impacts through changes in energy, material, and information flow. By tracing through the pathways, storages, energy transformations, and workgates, possible results of system alternations, based on a logical sequence of events, often can be described.

The ecosystems diagram does not claim to be a definitive or perfect treatment of ecosystems in general, or of any ecosystem in particular. The diagram does not include all the detail, subtleties, complexities, or eventualities. Only the important aspects necessary to characterize the functioning of ecosystems have been included - other details have purposely been omitted. Some aspects of ecosystems are very difficult to show without making the diagrams too complicated to use. Time relationships are difficult to show graphically, particularly if some of the processes modeled take place on different time scales. For example, temperature phenomena are measured in terms of days or months (seasons). Subsidence, however, occurs on a time scale of decades or centuries. Yet both must appear in the same model for appreciation of some systems.

Patterns of variation within the same time frame are also difficult to show. Without considerably complicating the diagram, the consequences of flooding in spring are indistinguishable from those in fall. The use of the diagrams, therefore, requires knowledge concerning quantities, durations, variability, and patterns of variation. The ecosystems diagram is a generalized description of the system, and can be a useful tool in thinking about how natural ecosystems operate.

The diagram approach is open ended. The subtleties of biota and environmental interaction as well as the potential impacts on them can be integrated into the diagram format as new knowledge is acquired.

The system diagram approach does, however, require specific information for its construction and interpretation. H.T. Odum (1971, 1972a) introduced a symbolic language which combined energy laws, principles of kinetics, and some philosophical tenets of electrical systems. The language consists of several basic modules shown in Figure 3-1. A circular symbol (Figure 3-1a) represents a source of materials or energy from outside the system such as the sun, tidal forces, suspended sediment, or rainfall. Also referred to as "forcing functions," these entities are described as outside programs affecting temporal patterns inside the system. In a few cases, these inputs are man-induced or controlled: for example, ditching, channelization, and impounding. The circular symbols also show losses or outputs leaving system boundaries and entering adjacent ecosystems.

The large bullet-shaped symbol (Figure 3-1b) represents primary producers, which receive energy from the sun. They transform radiant energy into plant material and are affected by numerous components within the ecosystem. Often several producer symbols are used to represent major functional plant groups in the ecosystem. These have been included to show differential effects of various ecosystem components and relationships between plant groups.

The tank-shaped symbol with the slanting roof (Figure 3-1c) represents a storage site of materials, which receives inputs from other sources and transfers material, energy, or information to other storage sites and organisms or out of the system.

The hexagons (Figure 3-1d) represent consumer organism groups (herbivores, detritivores, omnivores, and carnivores). Consumers utilize energy produced in the system and pass on energy to higher trophic levels. Perhaps the most important aspect of consumers is their regulatory function, selectively preying on or consuming certain species and, as a result, maintaining a particular equilibrium of producers and consumers. The trophic status of the consumer groups may be noted by the position relative to the flows and other consumer groups on the diagram.

A special case of consumers appears on diagrams where a storage and hexagon have been combined (Figure 3-1e). This is the detritus-microbe complex. Since detritus and micro-organisms are intimately associated, what affects one affects the other. Therefore they are combined.

The control (regulating) mechanism, or workgate, is shown by an arrow-shaped symbol (Figure 3-1f). Energy or material flows in the concave end and out the pointed end. The flow rate is controlled by the pathway leading in from the side. The symbol defines some sort of regulating process and may be considered analogous to a valve or faucet. Inside the workgate is another symbol, either "x" or "-," which show the direction of control of the

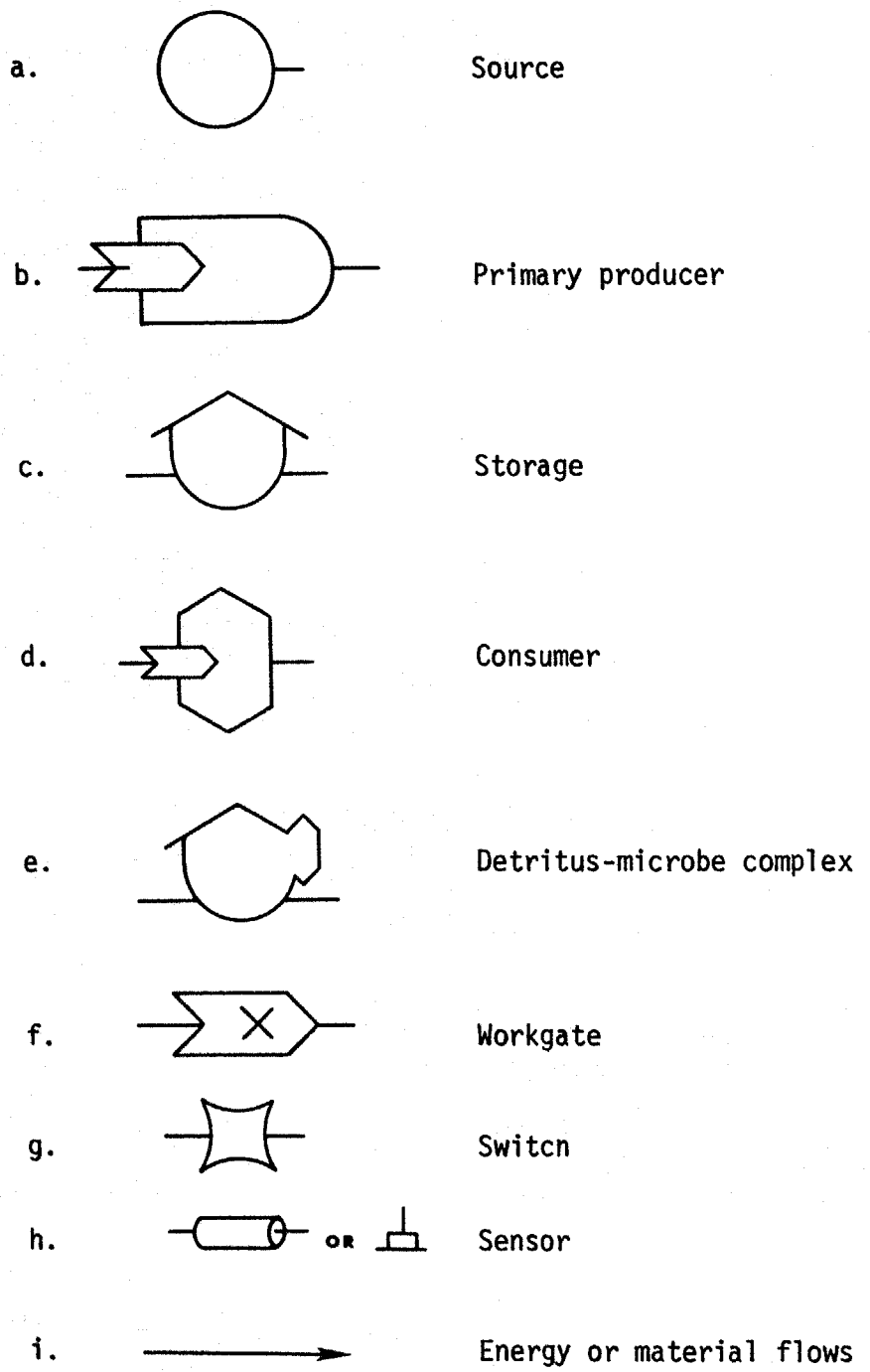

Figure 3-1. Modules of the energy circuit language.

rate-controlling pathway over the flow through the workgate. The "x" indicates that as the magnitude of the rate-controlling element increases, the flow through the workgate increases. The "-" indicates that as the magnitude of the rate-controlling element increases, the flow decreases.

The symbol with concave sides (Figure 3-1g) is a switch. It may be similar to a workgate, except that it does not control flow by varying continuously - it is either on or off. Several types of switches exist: some are simple on and off switches; others are on when two or more energy flows occur simultaneously or are at proper levels.

The pipe or tube symbol (Figure 3-1h) is a sensor. Sensors indicate passive effects of particular material flows. Another symbol indicating sensor-like functions is the cap, which is attached to primary producers (bullet symbol) or storages (tank symbol) and represents a passive function. For example, plants produce shade as a result of their growth.

Solid lines (Figure 3-1i) represent the flow of energy or materials into the system, out of the system, and within the system. The direction of the flow is indicated by arrowheads on the lines.

The ecosystems diagrammatic approach makes sense only when the diagram (and thus the ecosystem) is viewed as a whole. The model should be considered as an entire functioning system. Then by quick inspection of the diagram, the idea of "what affects what" may be summarized. This idea is particularly useful in predicting impacts as was pointed out by Odum (1972b). He noted that a good impact statement (one that accurately predicts impacts) is by definition a good model.

Known changes in inputs or internal organization can be entered into the diagram, and affected components can be identified. Usually the direction of change in the affected components may be discerned, and with careful use of logic and judgment, predictions of ecosystem change may be made. Such is the sort of tool necessary to assess the effects of oil and gas development and to determine the success of protective and mitigative measures.

MODELING THE SYSTEMS

The basic design of the ecosystems diagram and its utility in modeling natural systems is fully described in the preceding section. This section analyzes the dynamics of the six coastal ecosystems. It describes the ecological function of each community within each ecosystem and the links within and between the ecosystems.

Coastal Uplands

Conceptually, the upland ecosystem is composed of two primary systems - the abiotic system and the biotic system. The biotic system, in turn, is a complex composed of three equivalent subsystems (communities): the maritime woodland subsystem, the coastal grasslands subsystem, and the brush-grass subsystem. In the field, the biotic component will express itself as a particular subsystem or community functioning under the regulatory influence of the abiotic system. The abiotic system operates directly on the plant itself and/or indirectly through competition by other plants. The convention of separating the abiotic system from the communities is justified by the similarities of physical and chemical processes which operate in each community, which provide support for each community in the form of storage of various limiting factors, and which act as connecting links between adjacent ecosystems. Thus, four ecosystems are easily recognizable and will be analyzed separately, though in reality each system is inseparable from the others.

On the coastal plain uplands where grasslands and forests blend, the important regulatory factors that determine the existence and nature of the plant communities are fire and soil moisture (Wells, 1928; Oosting, 1956; Fowells, 1965; E. Odum, 1971). The major consequences of the presence, absence, and availability of these, as well as other components and the regulating factors which affect them, are important aspects that are addressed below.

Particular references are made to the Aransas NWR, but it should be recognized that the upland model is applicable to most coastal uplands and chenier ridges.

Abiotic system. The abiotic system describes (1) the physical and chemical processes and components which are common to the different aspects of the upland system and (2) microbial activity. The soil microbiota are more intimately associated with the abiotic system than with any particular community (Wiebe, 1971).

The abiotic system receives external inputs (driving forces) in the forms of sunlight, atmospheric water and gases, surface water from upland drainage, groundwater flowing down a hydrologic gradient, and gulf salt spray (E. Odum, 1971; Au, 1974). Additional system inputs such as nutrients and detritus are received from the particular community supported by the site. The abiotic system provides outputs as flows to the biotic components, flows that regulate community development. Such abiotic outputs include soil moisture, fire, soil salts, plant surface salts, nutrients, and soil heat. Finally, certain outputs of the abiotic system are lost from the system, at least temporarily, to become potential inputs of adjacent ecosystems, such as brackish or fresh marshes. Such system losses include evaporated water, eroded soils, leached nutrients and salts and surface-water runoff.

The abiotic system is dominated by two important and intimately associated subsystems, the hydrological cycle and the nutrient cycle. However, the nutrient cycle, important as it is, is contingent upon the hydrological cycle to make the nutrients available for use (Spurr, 1964). This is one reason it is essential to consider the hydrological cycle in detail. The treatment points out factors which regulate the flows within and between each subsystem.

The hydrology of the Aransas Refuge is discussed in the refuge descriptions in this chapter. The primary source of water input to the local hydrologic system is rainfall and groundwater flows in shallow aquifers (Bernard and LeBlanc, 1965). Other coastal upland areas may receive significant freshwater inputs from additional sources - sheetflow from further inland and riverine flooding.

Water is stored in the abiotic system as surface water or as groundwater. The surface-water storage includes nonpoint surface runoff; standing water bodies such as Bergentine and Long Lakes and numerous ponds, sloughs, and wet depressions; and flowing streams such as Bergentine, Twin and Salt Creeks.

The surface and groundwater storages interface through soil water storages. The two soil water storages (macropore and micropore water) are functions of two physical attributes of the soil: soil structure and soil texture. These two important physical properties regulate water-holding capacity and gaseous exchange capabilities. Soil structure, as it controls the effective pore size of the soil, is the regulator of water and air permeability (Buckman and Brady, 1969). The macrostructure of the soil provides larger pore spaces (macropores) between aggregates of soil material, which facilitate the rapid movement of air and percolating water. In contrast, the microstructure of a soil (micropores) pertains to the intergranular porosity. Pore sizes are much reduced, and consequently air movement is greatly impeded and water movements are restricted to capillary action. Soil water is stored temporarily as macropore water and more permanently as micropore water. Soil texture regulates the development of soil structure. Sandy soils permit the rapid movement of water and air because of the dominance of macropores, and they are typically mositure deficient (Spurr, 1964). Particle cohesion is high in fine-textured soils (clays and silts) and restricts the development of macropore spaces; micropore spaces are dominant and become easily filled with firmly bound soil water. Since the effective pore spaces are water-filled, soil aeration becomes inadequate for satisfactory root development and microbial activity.

Surface-water infiltration into the soil macropore spaces is regulated by land slope and vegetative cover. Increasing land slope tends to reduce percolation rates, but presence of vegetative cover will increase this rate (Spurr, 1964). Surface-water runoff contributes to the export and loss of nutrients and soil materials from the system. Adjacent systems receive these flows as inputs. Water filtering through the soil horizons may enter the groundwater storage or be retained as soil moisture. The rate and extent of downward percolation is affected by soil structure, soil texture, clay content, and the concentration of organic microdetritus, which contributes to high water-retention properties. Throughout much of the low-lying coastal areas, the groundwater

level is near the surface and receives the percolated water. The hydrologic gradient moves groundwater into the adjacent ecosystems (brackish or fresh marsh) where it contributes to standing water.

Evaporation occurs along several pathways: from the surface of standing water, from micropore water, and from plant transpiration. Climatic conditions regulate the evaporation rate from the storages. In addition, the rate of micropore water evaporation is regulated by soil heat, soil structure, concentration of organic materials, and vegetative cover. Soil moisture is the major contribution of the hydrologic cycle to vegetative growth. Many authors (Clements et al., 1929; Lehmann, 1941; Oosting, 1956; Marks and Harcombe, 1975; and others) allude to this point when discussing the influences of tropography, elevation, drainage, slope, and soil texture upon plant distribution.

The nutrient cycle is a major, tremendously complex element of the abiotic system. Return or recycle mechanisms in many cases require flows through biotic components (H.T. Odum, 1971). The storage of available nutrients in this upland ecosystem is of secondary importance as compared to the regulatory significance of soil moisture and fire (Bourdeau, 1954; Spurr, 1964). Soil moisture is the transport medium for soil nutrients (Buckman and Brady, 1969).

A brief summary of the complex nutrient cycle is necessary, however, to indicate at least the fundamental flows as well as to mention the primary regulating factors. To summarize this complicated cycle requires simplification and generalization.

There are three main sources of materials stored in the nutrient cycle. These are inorganic nutrients found in the substrate (Spurr, 1964); plant materials from the ecosystem (Oosting, 1956); and marine salts, either relict or from wind-borne salt spray (Au, 1974). Inorganic nutrients derived from either the parent material or the marine salts are made available to plants via strictly physical/chemical processes. Examples are phosphorus, potassium, and magnesium. Soil moisture and soil pH regulate these processes (Buckman and Brady, 1969). Inorganic nutrients derived from organic sources involve more complex pathways, requiring nutrient flows through the soil biota to permit inorganic nutrient release. Two important elements that require biotic "recycling" are nitrogen and sulphur. Regulatory factors control not only the physiochemical aspects of the soil chemistry, but also determine the soil's suitability as an environment for the soil biota, which accomplish the biochemical conversions. Soil moisture, soil heat, soil aeration, pH, and the availability of inorganic nutrients are important regulating factors (Buckman and Brady, 1969).

Fire can regulate the abiotic system directly through its effects on soil properties or, more significantly, it can regulate site quality indirectly through its impact on vegetation (Ahlgren and Ahlgren, 1960; Spurr, 1964; Daubenmire, 1968). Fire increases the available nutrient pool and accelerates the conversion of complex organic materials to simpler compounds, thus aiding the soil biota. Increased inorganic (primarily calcium and magnesium) nutrients raise the soil pH and improve soil fertility for about three yr (Daubenmire,

1968). Removing the organic layer (ground litter and vegetative cover) with fire also increases evaporation losses from macropore water. However, nutrient storage in sandy soils on gentle terrain, as in the southern coastal plain, suffer no appreciable losses by sheetflow erosion (Fahnestock, 1973). Soil heat is temporarily increased by fire; critical soil temperature is 100 C (212 F), above which most soil organisms die. However, high temperatures associated with fires are of short duration and penetrate only the first few mm of soil (Daubenmire, 1968).

As a regulatory factor influencing the ecological succession of biotic communities, fire is of paramount importance on the coastal plain uplands. Dominance of the prairie grasslands over the woody components of brush and forest is maintained, in large part, by periodic fires. The mechanisms that are involved are presented in the treatment of coastal grasslands.

Several other aspects of the abiotic system are important. Soil heat is an important regulating factor for several physical/chemical/biological processes including, for example, evaporation and microbial activity. Soil heat is a function of insulation, regulated by the darkness of the soil color (concentration of organic materials) and by vegetative cover.

Soil aeration is an important limiting factor of plant and microbial growth. It is regulated by soil structure, soil water, and the churning activities of the soil macrobiota. Sufficient gaseous exchange must occur between the soil and the atmosphere to satisfy the respiratory requirements of root biomass (Oosting, 1956; Spurr, 1964).

Wind-borne salt spray is an important limiting factor affecting plant competiton (Oosting and Billings, 1942; Boyce, 1954). It restricts plant growth in nearshore locations to those species best adapted physiologically to tolerate the desiccating salt and wind. Constant exposure to salt spray results in zonation of vegetation with the most salt-tolerant species found nearest the shoreline. Rain washes accumulated salts from plant surfaces into the soil.

Maritime woodlands. An ecosystems diagram for the maritime woodland is presented in Figure 3-2. The maritime woodland is the edaphic climax community of the coastal uplands (Johnston, 1955). There is no evidence that after becoming established this system is ever replaced naturally by subsequent seral stages. This community is a variant of the coastal evergreen forest, from which many species have been removed by salt stress. Characteristic vegetation includes many evergreen and aromatic trees and shrubs. The dominant tree species is live oak (*Quercus virginiana*). Associate subdominants usually include yaupon (*Ilex vomitoria*), red bay (*Persea borbonia*), wax myrtle (*Myrica cerifera*), and laurel oak (*Quercus laurifolia*) (Bourdeau and Oosting, 1959). This subsystem has low ecological diversity as compared to other inland forest sites (Bellis and proffitt, 1976). A complete list of common and scientific names used in this text is found in Appendix C.

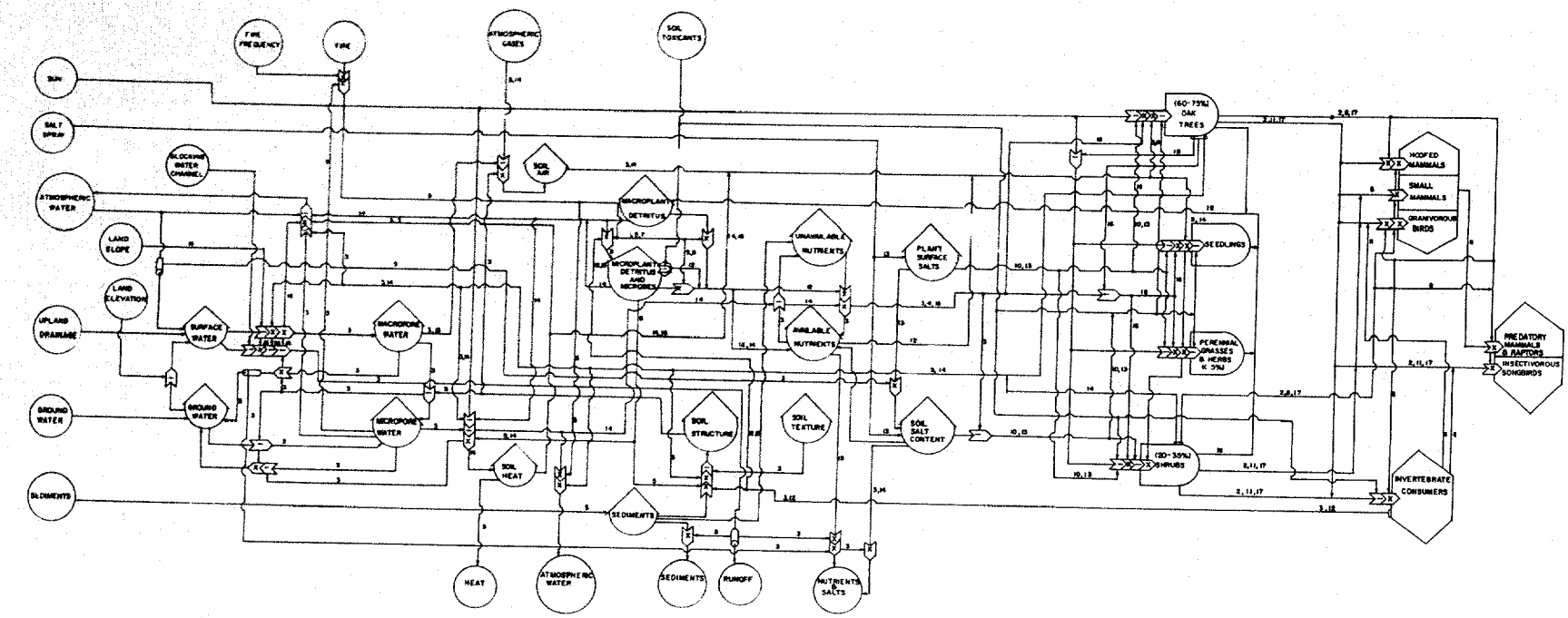

Legend:

1 - Ahlgren and Ahlgren, 1960
2 - Blakey, 1947
3 - Buckman and Brady, 1969
4 - Clements, Weaver, and Hanson, 1929
5 - Daubenmire, 1968
6 - Davis, 1974
7 - Edminster, 1954
8 - Halloran, 1943
9 - Hoffpauir, 1961
10 - Johnston, 1955
11 - Martin, Zim, and Nelson, 1951
12 - Odum, 1971
13 - Oosting, 1954
14 - Oostin, 1956
15 - Smith, 1966
16 - Spurr, 1964
17 - White, 1973

Figure 3-2. Ecosystems diagram of the maritime woodland.

Live oak dominance is ensured because its seedlings can establish and maintain themselves under the thick canopy in conditions of low light intensities and strong root competition for soil water - conditions too stressful for intolerant species (Spurr, 1964). Some oak seedlings eventually become components of the canopy, while tolerant seedlings of associated subdominant species form the characteristic understory. Competition for available soil water is one of the most important biotic regulating factors maintaining community structure. The extensive root system developed by the dominant species effectively blocks seedling roots from reaching a dependable water source. Low light intensities produced by the dense overhead canopy increase the stress on the seedling, if it is not shade tolerant, by blocking the energy source necessary for producing seedling root biomass (Clements et al., 1929; Spurr, 1964).

The maritime woodland has adapted to a very stressful abiotic environment. Salt stress is imposed by its proximity to the sea and the steady coastal winds. Sandy dune soils contain few mineral nutrients, and such nutrients as are available tend to be very mobile and readily lost from the root zone through leaching (Johnson et al., 1974). Highly porous sands permit the rapid percolation of rainfall through the soil strata and movement beyond the root zone. The typical available moisture content of coarse sands is approximately two percent (Oosting, 1956). Physiological drought may be accompanied by physical drought, depending upon the availability and timing of rainfall. Rainfall provides the only source of fresh water. Much of the rainfall occurs during the fall and early spring, but water requirements are greatest during summer. Water conservation is a prime function of the maritime woodland and is accomplished through shielding, reflection, insulation, and water storage (Bellis and Proffitt, 1976).

Most of the nutrient inputs are derived from salt spray. Sodium, magnesium, and chloride ions generally are present in surplus. Nitrogen, phosphorus, calcium, and potassium tend to be scarce and are generally tied up in the biomass. The root zone acts as an ion filter by transmitting excessive ions and by conserving and recycling scarce ions released by detrital decay (Spurr, 1964).

Compared to the adjacent coastal marshes, the maritime woodland is less productive. Low productivity probably results from total limited primary production, which in turn is the result of salt stress and low mineral base. However, careful studies of southern maritime forest productivity and trophic structures have not been published (Johnson et al.; 1974 Bellis and Proffitt, 1976). This community appears to be a producer-decomposer system capable of rapidly recycling essential nutrients back into the vegetation. Nutrients not tied up in biomass or bound to soil surfaces are quickly leached out of the system. Both import and export of organic matter seem to be minimal (Bellis and Proffitt, 1976).

Four groups of primary producers are distinguishable in this system. They differ in the roles fulfilled in community structure and the trophic input to consumer groups.

Live oak is the dominant producer of this community by virtue of its large biomass contribution and the controlling influence it exerts on the internal environment of the system; it regulates soil mosture, light, soil heat, plant detritus, and food and cover for consumer groups. Woody understory species comprise the second largest producer component and increase the competitive forces on the lower strata. The lowest strata, perennial grasses and herbs and hardwood seedlings, account for only a small fraction of the community primary productivity.

Primary producers regulate the flow of energy to the successive consumer levels and also satisfy their many diverse cover requirements. In this community the primary consumers consist of four generalized categories: hoofed mammals - for example white-tailed deer (Odocoileus virginianus), javelina (Pecari tajacu), and feral swine (Sus scrofa); small mammals, such as rabbits, (Sylvilagus spp.) and rodents; granivorous song- and gamebirds, such as the turkey (Meleagris gallopavo), bobwhite (Colinus virginianus), and sparrows; and insects. That the community dominant plays an important role in the transfer of energy to consumer groups is demonstrated by an analysis of the food habits of the Aransas Refuge deer population: 76 percent of the annual diet consists of live oak products (White, 1973). Other primary consumers equally dependent on live oak are the fox squirrel (Sciurus niger), wild turkey, and several woodpecker species. The predatory mammals (bobcat (Lynx rufus), raccoon (Procyon lotor), and grey fox (Urocyon cinereoargenteus), for example); raptors such as the Cooper's hawk (Accipiter cooperii) and great horned owl (Bubo virginianus), and the insectivorous songbirds are three categories of secondary consumers that feed on the small woodland mammals and/or insect groups. The woodland community also satisfies their resting and shelter requirements.

Flows between system components include the uptake of light, soil water, soil oxygen, and nutrients by the producers and transfer of energy from producers to consumers through the food chain. System detritus is derived from the producers, primarily the dominant and subdominant components. Consumer supplements to the detritus storage are comparatively minor.

System outputs include losses to the abiotic system through groundwater outflows.

The maritime woodland is expanding throughout many coastal grassland areas as a result of man's land management activities. Live oak encroachment is enhanced when grasslands are weakened by intensive grazing and infrequent fires (Daubenmire, 1968).

The primary value of the maritime woodland is that it helps stablilize a geologically unstable system. Direct benefits include (1) protection of loose sandy soils from wind erosion, (2) accumulation and storage of fresh water, (3) mineral ion filtration, and (4) production and development of organic soils (Bellis and Proffitt, 1976), although profile development is not extensive (Johnson et al., 1974).

Coastal grasslands: An ecosystem diagram for the coastal grassland is presented in Figure 3-3. The coastal grassland is a fire disclimax community: a subclimax seral stage maintained through time by the regular disruptive forces of fire. Fire is the essential regulating factor that determines community structure and composition. Without fire, forest or brush species invade and soon dominate former prairie areas (Johnston, 1963; Daubenmire, 1968; Bragg and Hulbert, 1976). Supporting this concept are the following observations: both the live oak woodland and coastal grasslands can exist on the same site (Blakey, 1947); with the cessation of fire, grasslands proceed directly to live oak woodland or other woody community types (Blakey, 1947); and once established the woodlands are not replaced by coastal grasslands (Johnson et al., 1974). The timing and frequency of burning is important in determining the influence of fire.

Fire regulates the community by favoring species exhibiting various adaptations and strategies for fire survival. Two general adaptive forms include the survival of underground plant parts and fire-resistant fruits or seeds. Also favored are plant forms that can invade a burned area and quickly establish sufficient biomass to ensure a dependable source of water and light (Clements et al., 1929). Herbaceous species are capable of rapid growth and regeneration from protected underground buds. Woody plants have slower regeneration times and greater sensitivity to fire damage.

A regime of periodic fires selects against woody seedlings by killing or weakening them. Weakened seedlings are unable to effectively compete against the stresses imposed by dominant herbaceous species. Continued fires help maintain the competitive edge of grasses.

Fire elimination enables woody seedlings, once established, to suppress grasses by direct shading. Beyond a critical size and density, hardwood vegetation is normally resistant to prairie fires (Blakey, 1947; Box et al., 1967). Established maritime woodlands and small oak mottes are fire-resistant, due to lack of sufficient ground fuel to support a tree-damaging fire (Johnson et al., 1974).

Again, competition for available soil water is the most important biotic regulating factor maintaining community structure. Light again plays a secondary role (Clements et al., 1929). Grasslands will dominate sites with edaphic conditions too severe for establishment of maritime woodlands. Such edaphic conditions may be poorly drained sites with excessive soil moisture or coastline margins with high soil salinities. The species composition of these grassland types will vary depending on the soil moisture, soil salinity, and soil structure.

The community structure and species composition differ from that of the woodlands, but the ecological roles of the various components are similar. The primary producers include the perennial grasses, perennial herbs, and small components of annuals and suppressed brush (each less than one percent of the total composition). Grazing will alter the primary producer structure to favor woody brush, perennial herbs, and annual weeds. Grazing intensity will regulate

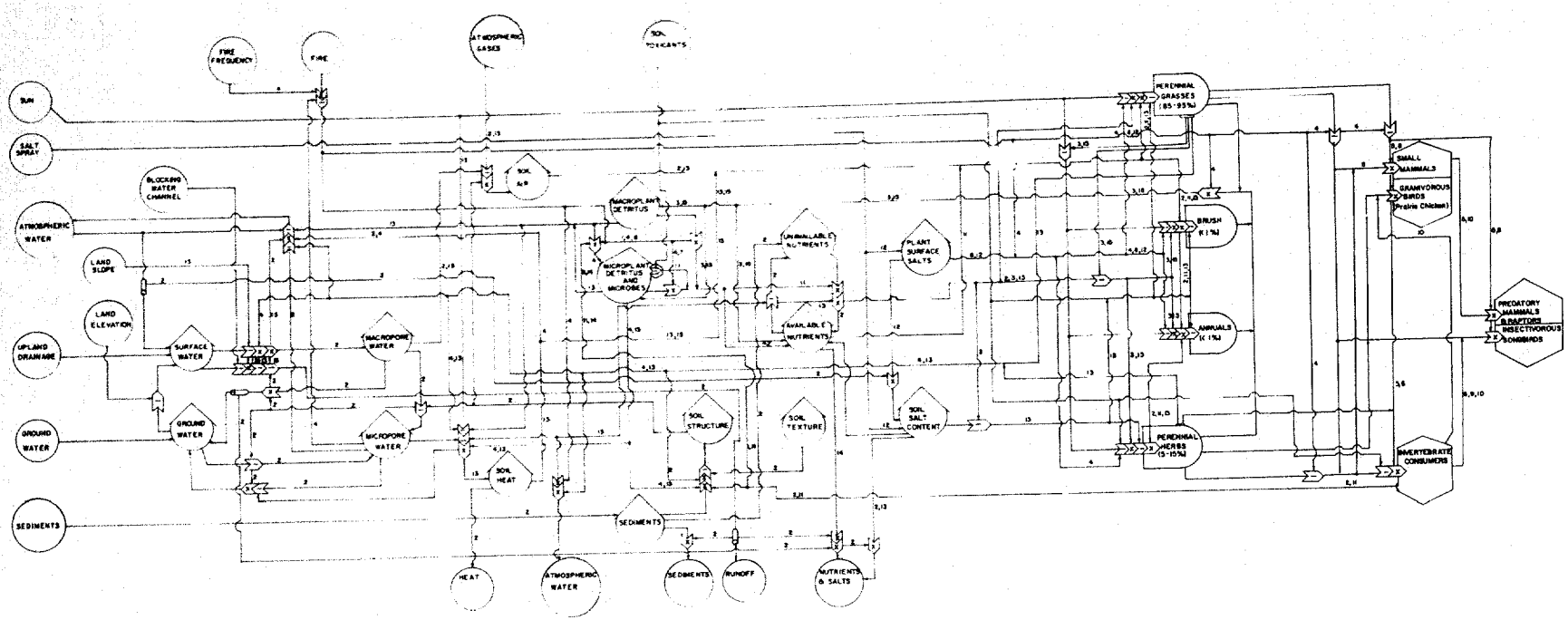

Legend:

1 - Ahlgren and Ahlgren, 1960
2 - Buckman and Brady, 1969
3 - Clements, Weaver, and Hanson, 1929
4 - Daubenmire, 1968
5 - Davis, 1974
6 - Edminster, 1954
7 - Hoffpauir, 1961
8 - Johnston, 1955
9 - Lehmann, 1941
10 - Martin, Zim, and Nelson, 1951
11 - Odum, 1971
12 - Oosting, 1954
13 - Oosting, 1956
14 - Smith, 1966
15 - Spurr, 1964

Figure 3-3. Ecosystems diagram of the coastal grassland.

the extent of change (Weaver, 1954; Ellison, 1960). Overgrazing accelerates the rate of grassland conversion to woody growth (Ellison, 1960).

The primary consumers include insects, granivorous birds, such as the eastern meadowlark (Sturnella magna) and prairie chicken (Tympanuchus sp.), and numerous small mammals (rodents). The grasses and other herbaceous species of different stand densities and life forms provide food and cover for the consumers. Aattwater's prairie chicken (Tympanuchus cupido attwateri) is especially dependent upon grassland presence and diversity. Loss of grasslands due to agriculture, ranching, and brush encroachment has caused extensive population reductions (Lehmann, 1941).

Secondary consumers in the coastal grasslands include predatory mammals, primarily the coyote (Canis latrans), and raptors such as the marsh hawk (Circus cyaneus) that fly in from adjacent systems; reptiles; and insectivorous songbirds. The predatory mammals and raptors hunt the rodent populations typically associated with grasslands, such as the hispid cotton rat (Sigmodon hispidus). The red wolf (Canis rufus) was formerly an important secondary consumer, but its ecological role has since been assumed by the coyote.

The limiting factors of the coastal grassland producers include the same components as in the maritime woodland, with the addition of fire. Portions of the system adjacent to the shoreline are subject to salt stress from periodic storm-surge flooding and salt spray, which increases soil salinity. These sites are rarely influenced by normal tidal action. Fire affects the consumer groups by destroying nests and young, eliminating cover types and temporarily removing or exposing food sources. Fire attracts several consumer groups to recently burned sites to forage on new, succulent, and nutritious vegetation (Allen, 1952).

System detritus is derived from the producers, primarily the perennial grasses. Humification in the grasslands is rapid, but mineralization is slow (Smith, 1966). System outputs include energy losses to the abiotic system through detritus, surface-water outflows, and groundwater outflows. Sheetwater flows carry nutrients into adjacent aquatic ecosystems, such as brackish and fresh marshes, ponds, and swales.

Brush-grass complex. An ecosystems diagram for the brush-grass complex is presented in Figure 3-4. This ecotonal community represents the intermediate stage in the successional transition from coastal grasslands to maritime woodland. In regions of low rainfall, as in south Texas, dense woody brush becomes the climax community. As an interfacing system, this brush-grass complex functions under all the previously described regulatory components. Community structure and species composition are spatially and temporally variable. As a transitional stage, the system is very dynamic with respect to dominants, producer composition, and structure.

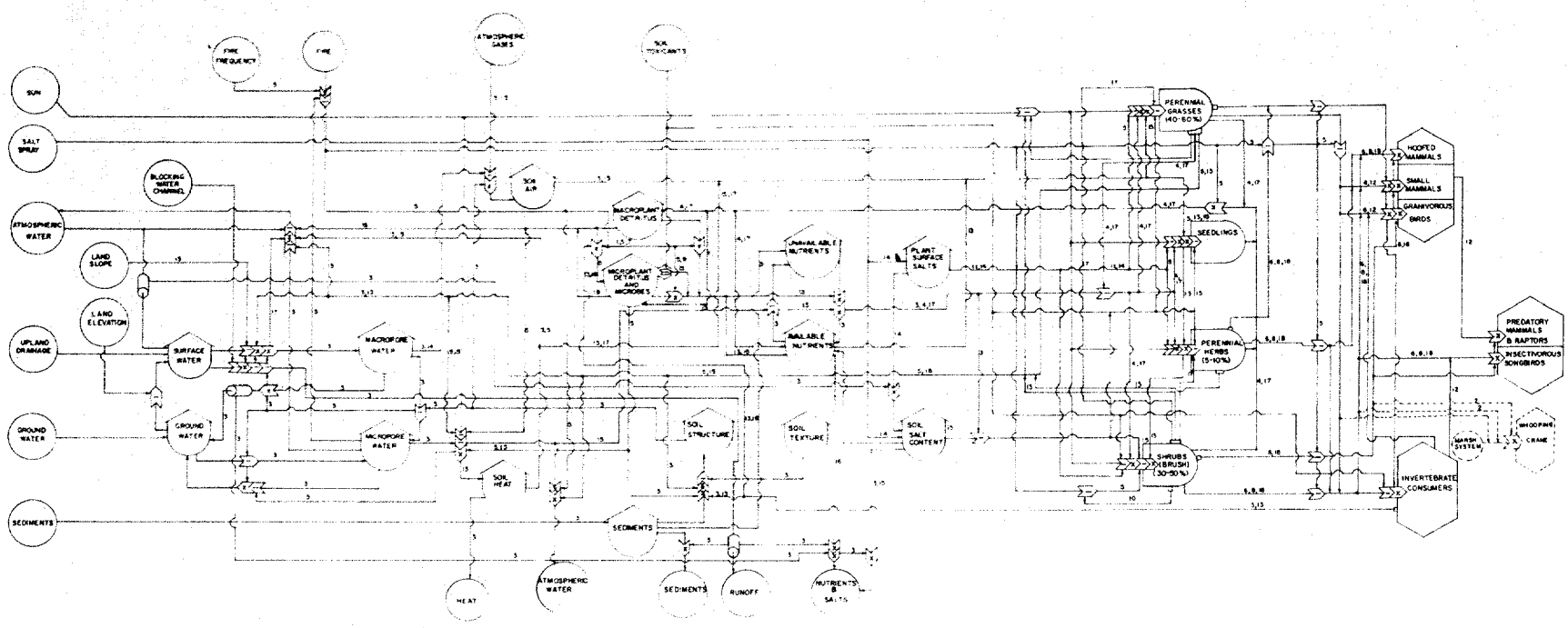

Legend:

1 - Ahlgren and Ahlgren, 1960
2 - Allen, 1952
3 - Buckman and Brady, 1969
4 - Clements, Weaver, and Hanson, 1929
5 - Daubenmire, 1968
6 - Davis, 1974
7 - Edminster, 1954
8 - Halloran, 1943
9 - Hosspauir, 1961
10 - Johnson, Hillestad, Shanholtzer, and Shanholtzer, 1974
11 - Johnston, 1955
12 - Martin, Zim, and Nelson, 1951
13 - Odum, 1971
14 - Oosting, 1954
15 - Oosting, 1956
16 - Smith, 1966
17 - Spurr, 1964
18 - White, 1973

Figure 3-4. Ecosystems diagram of the brush-grass complex.

Unlike the grassland or woodland, which are relatively resistant to short-term environmental fluctuations, the brush-grass ecotone is more responsive to changes in the magnitude or timing of critical regulating factors. Slight changes can enhance or suppress the competitive advantage of either component and will determine the final dominant. Fire is the most critical regulating factor, and its timing, frequency, and intensity determine the successional direction of the community (Daubenmire, 1968; Weaver, 1954). Under most circumstances, grazing will cause the same ecological effects as fire suppression in reducing the competitive advantage of grasses and favoring woody plant expansion (Ellison, 1960).

Primary producers include perennial grasses, hardwood shrubs (brush), perennial herbs, and to a lesser extent annual herbs and grasses and mature trees. Either brush or perennial grasses will dominate, depending on the stage of transition and current fire and grazing regime. Plant competition for soil moisture operates through the same mechanism as previously discussed. The effects of shading still regulate the complex interactions involved with the competition for soil water.

Primary consumers include the hoofed mammals (white-tailed deer, javelina, and feral swine), small mammals (rats, mice, and rabbits), granivorous song and gamebirds (turkey, dove, quail, sparrow, etc.), and the diverse insect group. The shrubs, particularly if not too dense, and perennial herbs are of great food and cover value to many wildlife species (Blakey, 1947). The high degree of cover-type interspersion produces a diverse environment in terms of life forms and species composition. Consumer groups reflect the desirable conditions and high primary productivity by maintaining elevated population levels. White-tailed deer have maintained population levels of 1 deer per 2 to 4 ha (5 to 10 acres), and turkeys reached densities of 1 bird per 16 ha (10 acres) on Aransas Refuge; both are extremely high productivity levels (Blakey, 1947). Overall consumer diversity is greater than productivity levels (Blakey, 1947). Overall consumer diversity is greater than in either the grassland or woodlands.

Secondary consumers include the predatory mammals (coyote, bobcat, grey fox, raccoon, and others); raptors such as the red-tailed hawk (*Buteo jamaicensis*), Harris' hawk (*Parabuteo unicinctus*), and great horned owl; and insectivorous songbirds such as vireos (*Vireo* spp.), Carolina chickadee (*Parus carolinensis*), and warblers. These species may forage in the grassland or maritime woodland periodically, but most of the hunting activity for rodents, rabbits, and insects occurs in the ecotone. On occasion, some of the secondary consumers shift trophic levels by feeding extensively on seasonally abundant fruits.

The whooping crane (*Grus americana*) uses portions of the community that adjoin the marsh for protection from severe northerly winds and as an occasional feeding area (Allen, 1952).

System outputs to the abiotic system are similar to those described for the woodland and grassland systems.

Salt Marsh

An ecosystems diagram for the salt marsh is presented in Figure 3-5. A coastal salt marsh is often considered to be a pioneer stage of successional development (Allan, 1950; Penfound, 1952), and it is therefore expected to be characterized by high primary productivity and relatively low species diversity (Odum, 1969). Smooth cordgrass (*Spartina alterniflora*) is typically dominant and may produce 1,500-3,000 g dry wt/m^2 per year. This large biomass is the major source of detritus which accumulates annually and supports the fauna of the marsh community; the excess production is exported to the adjacent water system via tidal flushing (Day et al., 1973).

This highly productive ecosystem is dependent upon tidal forces for import and export of materials and energy. Vegetative zonation and succession are governed by elevation, salinity, drainage/aeration, and edaphic conditions - all of which are directed by tidal fluxes (Daiber, 1974). Freshwater inputs may be significant also; their magnitude varies geographically and seasonally.

The primary components of the salt marsh ecosystem include stored sediment, nutrients, salt, heat, and detritus; standing crops of flora (grasses, epiphytes, and phytoplankton); and fauna (primary, secondary, and tertiary consumers).

Nutrients, sediment, and heat are moved to and from adajcent systems by tidal flushing forces. In contrast, freshwater runoff is responsible only for an inflow of materials and energy.

Tides. Periodic components of tides are due to gravitational forces. Along the Gulf of Mexico the annual tidal ranges resulting from these forces are small, usually ranging between 0.3 and 0.6 m (1 and 2 ft) (Marmer, 1954). The effects of winds can be significant in altering the areas of inundation in a marsh. Prevailing winds from the southeast are common in summer, and strong north winds occur intermittently in fall and winter months. Periodic hurricanes represent another seasonal phenomenon which may strongly influence this ecosystem. Thus, gravitation, wind, and elevation act to determine the frequency of inundation in the salt marsh, which, in turn, controls the general hydroperiod of any given area.

The frequency of inundation is an important regulator of gaseous exchange between plants and their environment and the chemical state of nutrients in the soil. Although smooth cordgrass cannot withstand complete submergence for extended periods (Redfield, 1972), a well developed vascular system allows this species a significant competitive advantage in the regularly flooded salt marsh (Teal and Kanwisher, 1966). Permanently saturated or flooded soils are characterized by a lack of oxygen. The resulting low redox potentials favor the reduced (and more available) form of nutrients. Periodic exposure to air increases rates of oxidation; this phenomenon provides an adequate supply of plant-available nutrients to support the high rates of growth in smooth cordgrass (Redman and Patrick, 1965; Brupbacher et al., 1973; De Laune et al., 1976).

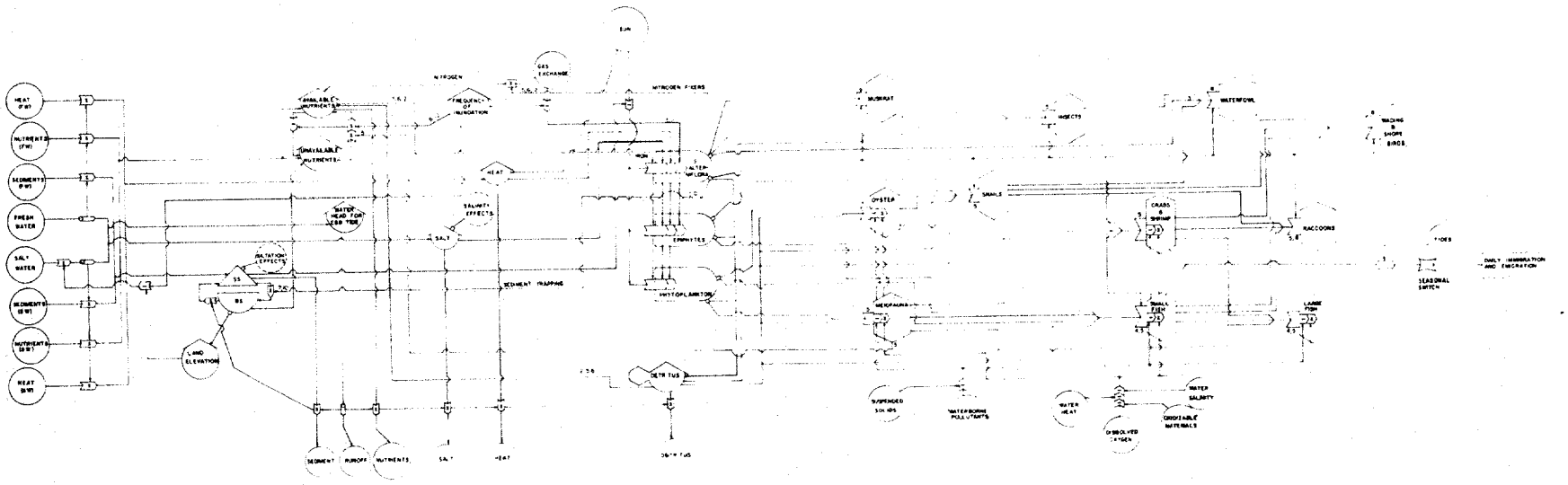

Legend:

1 - Adams, 1963
2 - Brupbacker, Sedberry, and Willis, 1973
3 - Daiber, 1974
4 - Darnell, 1961
5 - Day, Jr., Smith, Wagner, and Stowe, 1973
6 - De Laune, Patrick, Jr., and Brannon, 1976
7 - Lambert, 1964
8 - Martin, Zim, and Nelson, 1951
9 - Palmisano, 1972
10 - Penfound, 1952
11 - Redfield, 1972
12 - Tusneem and Patrick, 1971

Figure 3-5. Ecosystems diagram of the salt marsh.

Sediment. Sediment storage in the salt marsh may be partitioned into two components: bottom sediment and suspended sediment. Flows in and out of the system are suspended in water. The root system and dead standing crop of vegetation are responsible for trapping some of this suspended sediment; the deposition of sediment results in an increase in elevation. Successional phenomena are dependent upon this aggradation (Wells, 1928; Penfound, 1952; Lambert, 1964).

Exogenous mineral materials are of greater importance than peat accumulations in the salt marsh sediments. The ranges of average organic matter content of salt, brackish, and fresh marshes in Louisiana are 2 to 26 percent, 26 to 49 percent, and 6 to 66 percent, respectively (Chabreck, 1972). Brupbacher et al. (1973) reported the average organic matter contents of 45, 50, and 66 percent from salt, brackish, and fresh marshes, respectively. Thus salt marshes tend to accumulate organic material, although to a lesser extent than other marsh ecosystems (Chabreck, 1972; Brupbacher et al., 1973). Nutrients bound to these sandy and silty clays may provide a significant contribution to the storage of nutrients in the system.

Suspended sediments may affect the system via two pathways. The most direct pathway involves siltation effects. Bottom flora (algae, diatoms) and fauna (burrowers, oysters) may be partially or completely covered. The turbidity due to suspended sediment may decrease primary productivity by decreasing the light energy available to photosynthetic organisms.

Nutrients. The sources of nutrients in the salt marsh include exogenous (fresh and salt water) dissolved organic and inorganic material, nitrogen fixation, and detritus. Unavailable nutrients can be converted to available nutrients by two main processes. The bulk of nutrient regeneration (converting complex organic molecules to simple, usable forms) is accomplished by bacteria and protozoa. The important nutrients involved include phosphate and ammonia (Day et al., 1973; De Laune et al., 1976). The second nutrient conversion process is submergence and the release of extractable nutrients. This process affects the availability of nitrogen, iron, manganese, phosphorus, potassium, magnesium, calcium, sulfate, and chloride. The actual increases in available forms of nutrients are highly variable and depend upon complex chemical characteristics of the soils (Brupbacher et al., 1973; De Laune et al., 1976). De Laune et al. (1976) reviewed the literature and provided further data that indicate nitrogen may be the limiting nutrient in salt marshes. Although the quantity of total nitrogen present may be large, the plants are dependent on the available nitrogen (ammonia), which is provided by algae and bacteria via nitrogen fixation and regeneration. Thus, the rate of production of ammonia may be the limiting factor involved.

Primary producers. The vegetation of salt marshes is surprisingly similar along the entire Atlantic and gulf coasts (Allan, 1950; Cottam and Bourn, 1952). Smooth cordgrass is the dominant grass. Black needlerush (*Juncus roemerianus*), saltwort (*Batis maritima*), glasswort (*Salicornia* spp.), saltgrass (*Distichlis spicata*), and marshhay cordgrass (*Spartina patens*) are angiosperms commonly found associated with the dominant, but always on the higher, better drained areas.

Epiphytic algae and diatoms grow primarily on smooth cordgrass and supplement its primary production. Benthic algae are relatively sparse along the northern coast of the Gulf of Mexico, but they contribute measurable amounts of primary production in localized areas (Day et al., 1973).

Phytoplankton in the water column comprise the last important component of primary producers in this system. The seasonality of all components should be emphasized. Production of smooth cordgrass is greatest in spring. Different species of epiphytes exhibit peak productions throughout the year; species of phytoplankton are most abundant in the summer. Day et al. (1973) have provided estimates of these annual production rates for the Barataria Bay area of Louisiana. Average net productions for grasses, epiphytes, benthic algae and diatoms, and phytoplankton are 1518, 26, 488, and 418 g dry wt/m^2/yr, respectively.

All of these producers are affected by tides, sediment, and nutrients as previously discussed. Salinity and heat differentially affect vegetation; competition determines the dominant species and its associates for any given set of conditions. The important point is that all the producers contribute to the pool of detritus, the base of the food pyramid in the salt marsh systems of the gulf coast (Darnell, 1961 and 1967; Teal, 1962; Day et al., 1973).

Consumers. Day et al. (1973) have used past studies and their own data to present coverage of the food chain in a gulf coast salt marsh. The fauna in a salt marsh are dependent upon the vegetation for cover as well as for food. The muskrat, for example, uses smooth cordgrass stems to construct its home. Snails and insects are protected from predators while grazing on epiphytes and plant blades, respectively. Likewise, the waterfowl, wading birds and shorebirds, raccoon, and small fish use the vegetation for cover while feeding and resting.

Some species consume the marsh grasses directly. Muskrat, nutria (*Myocastor coypus*), and waterfowl eat rhizomes of smooth cordgrass while insects prefer blades. Oysters, meiofauna (worms, ostrocods, copepods), snails, and some fish are primary consumers that feed on phytoplankton and epiphytes. Waterfowl, crabs, shrimp, and some fish feed on these primary consumers. They, in turn, are eaten by raccoons, wading birds, shorebirds, and large fish.

Many of the secondary and tertiary consumers are migratory species, and therefore they are present only during portions of the year. Superimposed upon this regime of annual movements are the daily movements of fish, crabs, and shrimp (and their predators), mediated by the tides. Consumers return materials and energy to the ecosystem via feces and carcasses.

Other important factors which may directly affect the aquatic consumers include salinity, suspended sediments, pollutants, and dissolved oxygen. The latter is subject to effects of heat, salinity, and content of oxidizable material. All of these factors are greately influenced by anthropogenic activities.

Summary. In summary, the salt marsh system is characterized by relatively few species maintaining a high annual primary productivity. This production level is accomplished by seasonal shifts in the major producing components of the system. Grasses dominate in spring and summer, phytoplankton production is greatest during warm months, and production by benthic plants and epiphytes is highest in the winter. The result is a constant supply of detritus, the material which supports the food web of the system.

Producers, consumers, and flows of material and energy are regulated by tidal phenomena, which also undergo regular temporal changes in magnitude.

Brackish Marsh

An ecosystems diagram for the brackish marsh is presented in Figure 3-6. In a long-range time scale of general marsh succession, brackish marshes are expected to precede coastal prairie and more upland-type systems and follow salt marshes (Allan, 1950; Cottam and Bourn, 1952). Several stages of succession may be seen within the brackish marsh system. The number of stages, the duration of each, and the species compositions are geographically variable and highly dependent on local climate and edaphic conditions. Marshhay cordgrass is the characteristic dominant and is frequently codominant with marsh saltgrass. These species are variously associated with sedges, rushes, canes, shrubs, and woody vegetation, depending primarily upon the elevation of the surface. It is the elevation which indirectly regulates several important components of the hydroperiod of a given marsh (Wells, 1928; O'Neil, 1949; Daiber, 1974). The measured productivity of a brackish marsh is less than that of a salt marsh; this may be an artifact of sampling and due to the tendency of smooth cordgrass to form pure stands, where marshhay cordgrass often exists in mixed stands (Keefe, 1972; Henderson and Harcombe, 1976). The brackish marsh is subject to irregular saltwater inundation ranging in frequency from semi-monthly to semi-annually; the extent of inundation is dependent upon wind direction, intensity, and duration (Fisher et al., 1972, 1973). The freshwater inputs are relatively more important than in the salt marsh system (Cottam and Bourn, 1952).

The major components of the brackish marsh ecosystem include storage of water (macropore, micropore, and standing), sediment, nutrients, heat, salt, detritus; standing crops of flora (grasses and sedges); and fauna (primary, secondary, and tertiary consumers). Forcing functions from outside the system include water flow (fresh and saline), management practices (impoundments, drawdowns, ditching, fire), and pollution. Sediment, salt, and nutrients are imported from adjacent systems via moving water.

Water fluxes. Water is of primary importance in the dynamics of the brackish marsh. It is responsible for the transport of materials and energy (nutrients, sediment, heat, salt). Each type of water input (fresh and saline) may be simplistically imagined as coming from opposite directions and counteracting the magnitude of the other. Thus, relative increases in freshwater effects (via rainfall, storms, or impounding) will be accompanied by decreases

in saline effects, and vice versa (via channelization or hurricanes). The timing of these water fluxes (discussed later) may be very important.

No matter what their source, water inputs into the brackish marsh will follow one of three pathways: (1) they may percolate into the macropore and micropore spaces of the soil; (2) if the soil is saturated, they may add to the storage of standing water; or (3) they may flow out of the system as runoff.

The storage of standing water is important for several reasons. First, it provides habitat for all the aquatic plants and animals. Second, the reservoir of standing water is a regulator of gaseous exchange between the air and soil; this is an important factor in the physiological mechanisms of marsh vegetation. The depth of water and the duration of submergence help determine the species of plants that will dominate an area. Third, the biological and chemical properties of flooded soils are quite different from those of aerated soils. Of primary concern is the rate of decomposition of organic material, the end products of such decomposition, and the chemical state of nutrients in the soil. In saturated soils, decomposition proceeds slowly and results in reduced forms of end products. The reduced (more motile) forms of trace nutrients predominate also (Redman and Patrick, 1965; Tusneem and Patrick, 1971; De Laune et al., 1976). Frequent aeration of saturated soils (via lowering of the water level) allows oxidation of organic materials to intermittently proceed at a faster rate and thus provides a constant high level of available nutrients to the vegetation.

Management practices are oriented toward controlling these forcing functions (water depth, duration of submergence, and frequency of sumergence/emergence) with timing as an added variable. Natural succession can be reversed and held at an earlier stage if all of these factors are properly controlled (Rossa and Chabreck, 1972).

Sediment. Sediment storage in the brackish marsh may be partitioned into two components - bottom sediment and suspended sediment. Flows of material into and out of the system are suspended in water and are proportional to the rate of flow of water. The nutrients complexed with bottom sediment contribute to the pool of nutrients in the system. The accumulation of bottom sediment leads to an increase in elevation. That portion of the peat due to the rough mat of dead marshhay cordgrass/saltgrass may become very significant, especially when one is considering competition and fire.

The organic matter content of brackish marsh soils (26 to 49 percent) is intermediate to those of saline and fresh marshes (Chabreck, 1972; Brupbacher et al., 1973). Such a range reflects the balance between importation of mineral materials and deposition of endogenous plant remains.

Suspended sediment may affect the system via two pathways. The most direct pathway involves siltation effects on benthic flora and fauna. Increased turbidity due to suspended sediment may decrease primary productivity by decreasing the light energy available to photosynthetic organisms.

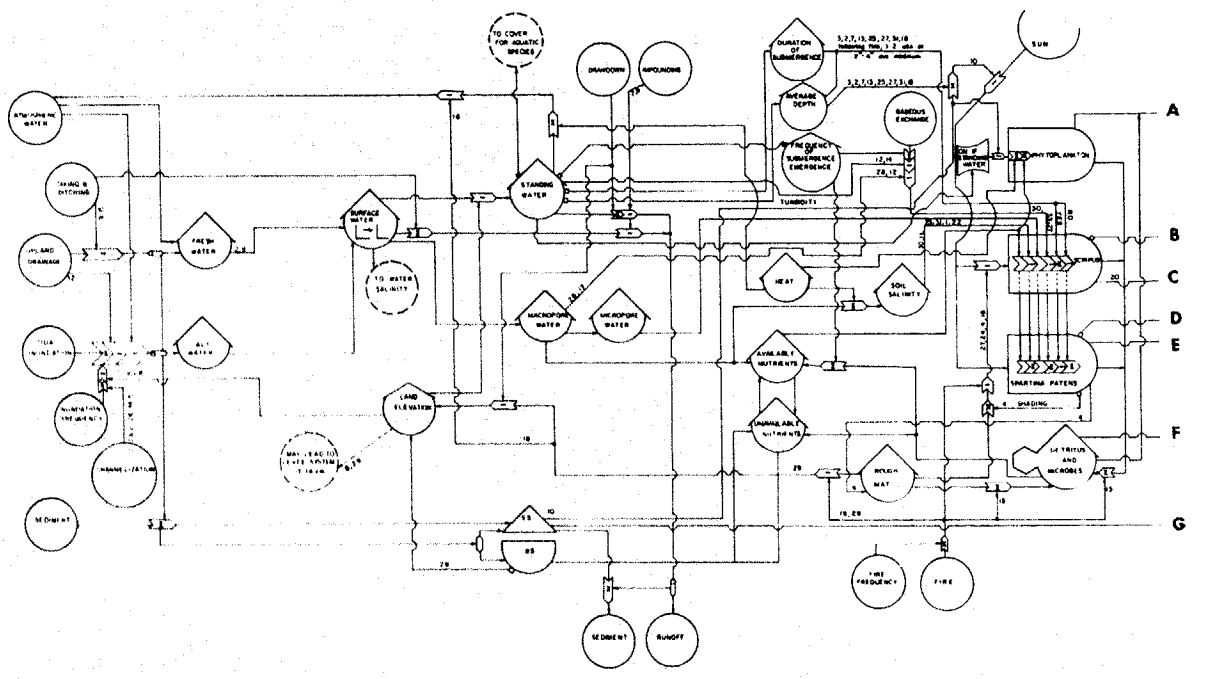

Figure 3-6. Ecosystems diagram of the brackish marsh.

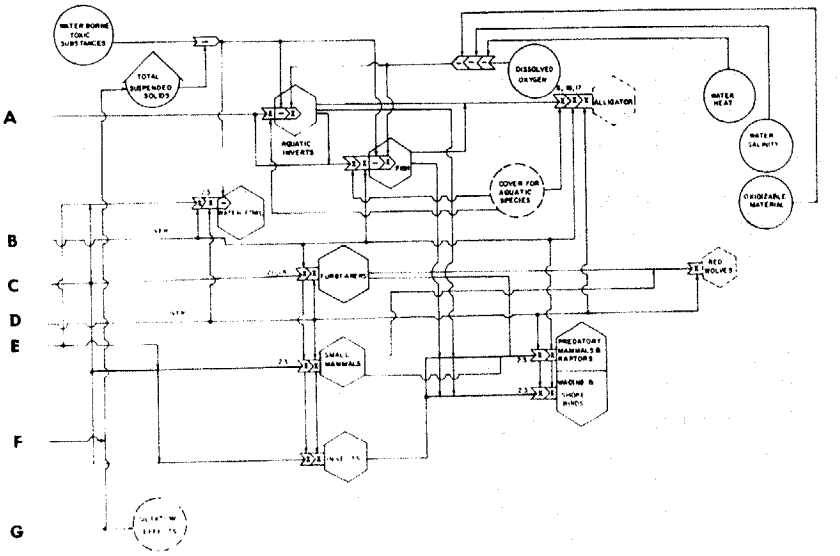

Figure 3-6 (concluded)

Nutrients. Significant nutrient sources in the brackish marsh include exogenous dissolved organic and inorganic materials (from fresh and saline water), detritus, and bottom sediment. The relative contributions of each differ with the location and climate of a given area. Because these marshes are infrequently inundated by tides, the nutrient contribution from saline sources is less in brackish marshes than in salt marshes. The significance of this contribution depends on (1) the volume of freshwater input and (2) the concentrations of nutrients in the fresh water.

Nutrient transformations between unavailable and available forms are similar to those described for a salt marsh. It must be emphasized, however, that the brackish marsh is not inundated daily by tides. Areas may be flooded or exposed for short or long periods, depending primarily upon elevation, rainfall/evaporation rates, and management practices. Nutrient regeneration is accomplished by bacteria acting on detritus and other particulate organic material. Nitrates and phosphates are released for plant utilization in aerated soils. Submergence, however, changes the oxidation-reduction systems and the microbial populations which are active. The result is biological production of ammonia rather than of nitrate. Also, the reduced forms of inorganics (magnesium, manganese, iron, potassium, calcium) predominate; these forms are generally more available to plants than the oxidized forms (Redman and Patrick, 1965; Brupbacher et al., 1973; De Laune et al., 1976).

Primary producers. The vegetation of brackish marshes is typically dominated by marshhay cordgrass. Saltgrass is the most commonly found associate and may codominate in more saline soils (Allan, 1950).

The rough mat formed by the dead culms of these species is an effective self-preservation mechanism (Blum, 1968). Competition from other species is insignificant unless this mat is removed by fire, storms, or mechanical means (Lynch et al., 1947; McNease and Glasgow, 1970; Smith, 1970; Hess et al., 1975). Pure stands of rushes and sedges (*Scirpus* spp.) may be locally abundant in lower wet areas. These subdominants have a narrower salinity range than marshhay cordgrass or saltgrass and their competitive advantage is dependent upon the levels of standing water and temporal variation (Babcock, 1967; Palmisano and Newsom, 1968; Rossa and Chabreck, 1972). Furthermore, when stands of sedges do manage to thrive, they are selectively consumed by waterfowl, muskrat, nutria, and cattle (Lynch et al., 1947; O'Neil, 1949; Chabreck, 1968). Hence, the natural fluctuation of various environmental factors favors marshhay cordgrass as the climax species.

Although the primary productivity of mashhay cordgras/saltgrass is generally less than that of smooth cordgrass, it is still very impressive. Henderson and Harcombe (1976) report values between 1,300 and 1,900 $g/m^2/yr$ for the gulf coast. By comparison, the production of phytoplankton is insignificant. However, the phytoplankton comprise an important food source for aquatic invertebrates and small fish.

In addition to the production of foodstuff, the vegetation of the brackish marsh also provides cover for the fauna. Many of the conspicuous animals (muskrat, nutria, alligator (Alligator mississippiensis), birds) utilize vegetation for construction of nests; all terrestrial animals may employ the vegetation for concealment from predators (O'Neil, 1949; Joanen, 1969; Chabreck, 1971b).

The primary producers are differentially regulated by water fluxes, sediment, salinity, and nutrients as previously discussed. Interaction between these factors results in the area's total vegetative composition being available to consumers.

Consumers. The primary consumers of the brackish marsh may by categorized as terrestrial or aquatic. Small fish and invertebrates comprise the bulk of the latter category; they feed primarily upon detritus and phytoplankton. These aquatic organisms are regulated by the volume of standing water; concentrations of oxygen and toxic substances may affect their physiology. Suspended substances, salinity, and heat may modify these parameters. Secondary consumers, which rely heavily on these aquatic species, include alligators, mammals, and birds (Chabreck, 1971a, 1971b).

Insects, waterfowl, muskrat, nutria, and other small mammals consume primary producers directly. It is well established that waterfowl, muskrat, and nutria prefer the rhizomes of sedges to those of marshhay cordgrass or saltgrass. This preference has led to "eatouts" of large areas in the past. Although detrimental to the further survival of sedges, these areas may prove to be beneficial to ducks (Lynch et al., 1947; O'Neil, 1949). All of these terrestrial primary consumers may utilize the vegetation for cover and/or nest construction.

Many secondary consumers - large mammals (raccoon, oppossum (Didelphis marsupialis), armadillo (Dasypus novemcinctus), wolf), marsh hawks, and other birds (red-wing blackbird (Agelaius phoeniceus), bittern, rail, crane, sandpiper) - rely heavily on the terrestrial primary consumers for food.

Although man may be considered the top carnivore in this system, his activities that alter land and water characteristics are more significant than his predation (Gagliano, 1973).

Summary. The brackish marsh system is characterized by a highly productive grass or grass/sedge community dominated by marshhay cordgrass. Its dominance can be suppressed only by proper regulation of fire, hydroperiod, and salinity. The vegetation supports a variety of economically important animals. The primary forcing functions in the system are the fluxes of water (fresh and saline), which regulate the flows of nutrients, sediment, salt, and heat. In addition, the water inputs determine the frequency of submergence/emergence, duration of submergence, and depth of standing water. These factors are regulators of the primary producers and consumers. Management practices and other human activities affect the system, primarily by altering the temporal and spatial relationships of water.

Fresh Marsh

An ecosystems diagram for the fresh marsh is presented in Figure 3-7. Fresh marshes are generally characterized by deeper water, fewer salts, and more numerous species than are brackish or salt marshes. The water flow regime (hydroperiod) controls the phenomena of plant zonation and succession of the classic open-pond/meadow system. Coontail (Ceratophyllum demersum), pondweed (Potamogeton spp.), and southern naiad (Najas guadalupensis) are common submergent species; dense growths of alligatorweed (Alternanthera philoxeroides), water hyacinth (Eichornia crassipes), or duckweed (Lemna minor, Spirodella polyrhiza) may dominate the zone of floating vegetation. The species composition of the emergent zone is quite variable and may be composed of canes, rushes, and/or sedges, depending upon edaphic conditions. Cattail (Typha latifolia and T. angustifolia), roseau cane (Phragmites communis), sedges, bulltongue (Sagittaria falcata), water hyssop (Bacopa monnieri) are common dominants. The meadow marsh zone is typically dominated by grass species such as maiden cane (Panicum hemitomon), sprangletop (Leptochloa fascicularis), wild millet (Echinochloa walteri) or wild rice (Zizania aquatica) (Allan, 1950; Penfound, 1952; Palmisano, 1970).

Fresh marshes are frequently more nutrient-limited than are brackish or salt marshes. This is presumably due to the lack of input from saline environments and to alterations of natural drainage patterns (Palmisano, 1970; Bayley and Odum, 1976). However, if adequate phosporous is available, the measurements of primary productivity in fresh marshes may approach those for brackish or salt marsh systems (Keefe, 1972).

The main components of the fresh marsh ecosystem are storage of water (macropore, micropore, and standing), sediment, nutrients, peat, salt; standing crops of flora (phytoplankton, grasses, emergents, floating mats, and submergents); and fauna (primary and secondary consumers). Flows of salt, nutrients, sediments, and gases are moved to and from adajcent systems by flowing water. Forcing functions from outside the system include management practices (ditching, channeling, diking, fire, drawdowns) and pollution.

Water fluxes. Upland drainage and rain are the sources of water in fresh marsh systems; in addition, they are the primary sources of nutrients (Bayley and Odum, 1976). The inland locations of these marshes prevent inputs from saline environments; however, river delta marshes and marshes subjected to channelization may sporadically be affected by saltwater intrusion, especially during hurricanes. The water inputs into the system must follow one of three pathways: (1) they may percolate into the macropore and micropore spaces of the soil; (2) if the soil is saturated, they may add to the storage of standing water; or (3) they may flow out of the system as runoff.

Standing water is the crucial storage site in this system; the depth of water and duration of submergence determine the vegetative zonation and succession in a given area. This effect is realized via regulation of the soil moisture, soil aeration, and soil chemistry (O'Neil, 1949; Penfound, 1952;

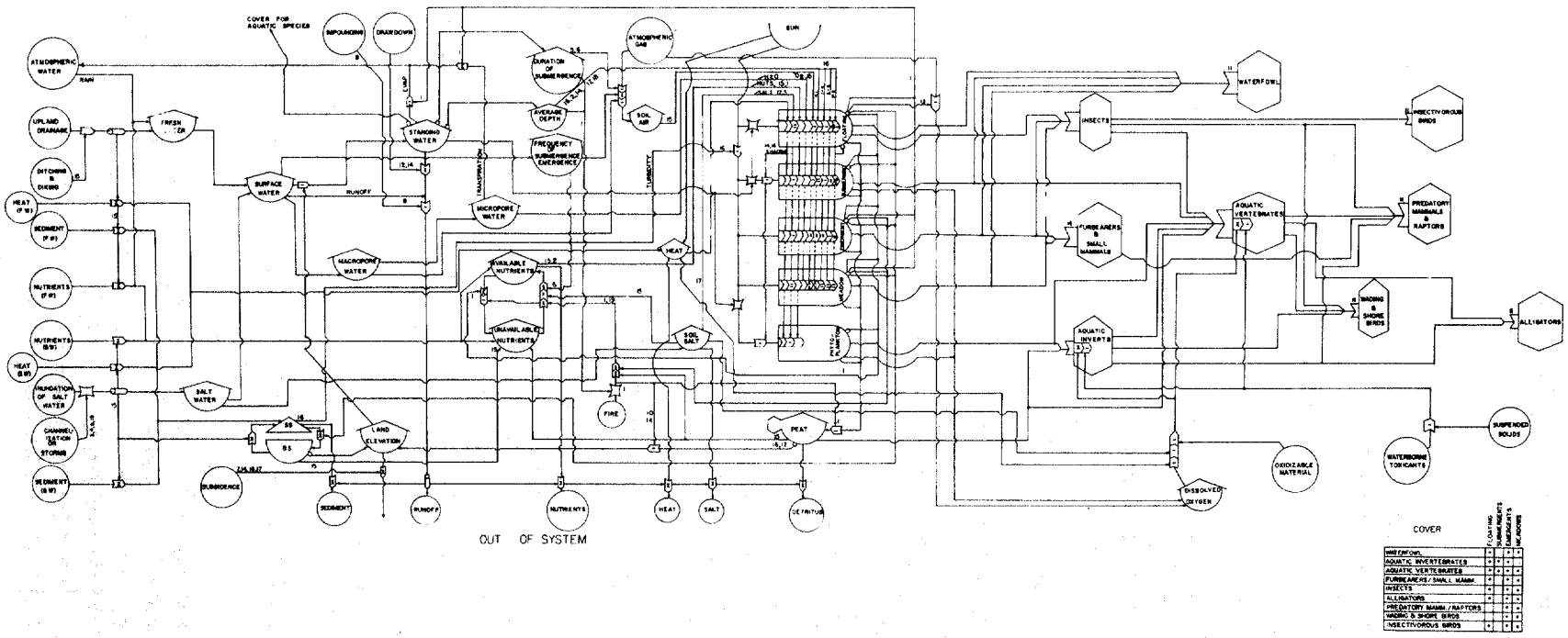

Legend:

1 - Bayley, Suzanne, and Odum, 1976
2 - Chabreck, 1971
3 - Chabreck and Palmisano, 1973
4 - Clark and Juve, 1962
5 - Day, Jr., Wagner, and Stowe, 1973
6 - De Laune, Patrick, and Brannon, 1976
7 - Eleuterius, 1971
8 - Ensminger, 1963
9 - Ensminger, and Nichols, 1957
10 - Lynch, 1941
11 - Martin, Zim, and Nelson, 1951
12 - Meeks, 1969
13 - Mitsch, 1976
14 - O'Neil, 1949
15 - Palmisano, 1970
16 - Penfound, 1952
17 - Penfound and Hathaway, 1938
18 - Smith, 1970
19 - Vogl, 1973

Figure 3-7. Ecosystems diagram of the fresh marsh.

Palmisano, 1970; Bayley and Odum, 1976). The biological and chemical properties of flooded soils are significantly different from those of aerated soils. Nutrient regeneration is slower in saturated soils, and growth of vegetation may be limited by the lack of available nutrients (Redman and Patrick, 1965; Palmisano, 1970).

The goal of many management practices is to control the flow and storage of water in the system. Impoundments and drawdowns are most common in this marsh type. Through proper timing of water level regulation, the vegetation can be controlled to favor cattle, waterfowl, fish, or other wildlife (Ensminger, 1963; Shiflet, 1963; Meeks, 1969; Smith, 1970).

It must be emphasized that flowing water is the main transporter of sediments into and out of the system. The primary effect of decreases in water flows (resulting from levees and channels) may be due to the reduced sediment input rather than to the reduced nutrient input per se (Penfound and Hathaway, 1938; Gagliano, 1973).

Standing water, of course, provides the necessary habitat for all aquatic plants and animals. Phytoplankton and fish, for example, are totally dependent upon ponds for their existence.

Sediment. The primary source of mineral sediment in a typical fresh marsh is upland drainage. As mentioned earlier, the location of the marsh (river mouth) or man-induced alterations (channelization) may allow marine influences in some fresh marshes. Regardless of their origin, the allochthonous sediments bear important nutrients complexed to their surfaces.

The highly organic soils of fresh marshes indicate a predominance of peat deposition over importation of mineral sediments. Chabreck (1972) and Brupbacher, et al. (1973) reported average organic matter content of mucks and peats from Louisiana fresh marshes as high as 66 percent. Brackish and salt marshes, in comparison, were 50 and 45 percent organic, respectively. Bayley and Odum (1976) found that one-seventh of the total plant biomass in a sawgrass marsh is converted to peat. This accumulation of material is important in counteracting the effects of subsidence in coastal areas. If the rate of peat accumulation is sufficient, net land elevation may increase. This would initiate a successional change in vegetation. Vegetation may also change as a consequence of a change in the type of sediment deposited. Roseau cane, for example, is usually found on mineral soils; cattail, however, is commonly the dominant in similar systems with organic soils (O'Neil, 1949).

Suspended sediment may affect the biota of this system via two pathways. Turbidity due to suspended sediment decreases the light energy available to photosynthetic organisms, and thus it reduces primary productivity. The mat-forming species are unaffected because their photosynthetic tissues are almost entirely above water. The second pathway involves siltation effects on benthic flora and fauna. Because the quantity of suspended sediment is relatively low

in this marsh system, these effects are not expected to play as significant a role as they do in brackish and salt marshes.

Nutrients. Sources of nutrients in the fresh marsh include dissolved organic and inorganic materials (from rain and upland drainage), peat decomposition, and sediment deposition. The latter source is expected to be the least significant if the system is removed from marine influences.

The amount of extractable nutrients in a fresh marsh system is generally lower than in brackish or salt marshes (Palmisano, 1970; Brupbacher et. al., 1973). However, within a given marsh type there are strong positive correlations between water-soluble nutrients (sodium, magnesium, potassium, and phosphorus) and organic matter content of soil materials. Phosphorus is notably low in samples from fresh marsh systems. Palmisano (1970) stated that phosphorus apparently accumulates in plant tissues in a form which is unavailable to succeeding generations of vegetation; this and other micronutrients, through complexation with organic molecules, may be limiting to species in organic soils. Bayley and Odum (1976) also indicated that phosphorus is the limiting nutrient in freshwater sawgrass marshes.

The interconversion of unavailable and available nutrients is controlled by several processes. Sodium concentration may influence the displacement of other cations from exchange sites on clay micelles and organic molecules (Palmisano, 1970). The magnitude of this effect is ultimately dependent upon the amount of saltwater inundation. Fires convert some of the nutrients incorporated in peat and living biomass back into an available form. This may account for the more vigorous growth frequently noted after marsh fires (Vogl, 1973). Fire may also release some nutrients to the air, but the significance of such losses in marsh systems remains unknown (Bayley and Odum, 1976). Submergence and its effects on oxidation-reduction systems and microbial populations have been discussed previously. In general, the reduced forms of nutrients that result from flooding are more available to plants. However, the actual changes in nutrient titers depend on the complex chemical characteristics of the soil materials (Redman and Patrick, 1965; Brupbacher et al., 1973).

Primary producers. Fresh marsh is characterized by a large number of species. Chabreck (1972) listed 93 species found in the fresh marshes of Louisiana. In comparison, 40 and 17 species were listed for brackish and salt marshes, respectively. This difference is presumably due to (1) wider ranges in some ecologically important variables (topography, soil type, hydroperiod) and (2) the decrease in extremes of salinity and inundation regimes found in the fresh marsh ecosystem. Competition thus becomes more subtle a process rather than an "all or none" situation, and the result is a large number of coexisting species. Our model allows for categories of vegetation (submergent, floating, emergent, meadows, phytoplankton), but it is not concerned with species. These plant categories are regulated primarily by water depth. Salt, oxygen, soil type, and nutrient availability also have different effects and play roles in determining the vegetative composition of an area.

The total biomass of floating, emergent, and meadow type vegetation regulates the level of standing water in the system via evaporation and transpiration effects.

Floating vegetation not only eliminates submergents and phytoplankton by shading (Penfound, 1952), but it may become so dense as to significantly interfere with oxygen diffusion across the air-water interface (Mitsch, 1976).

The total vegetation in an area, regardless of its species composition, will contribute to the accumulation of peat and the concomitant decrease of available nutrients. However, the greater the amount of flammable peat and vegetative cover, the greater the effect of a fire in converting unavailable nutrients to available nutrients.

In addition to providing food for consumers, the plant species may also provide cover. Many of the animals use vegetation for nest construction (birds, alligator, nutria) and/or concealment.

Consumers. The primary consumers of a fresh marsh may be categorized as terrestrial or aquatic. When one considers the flow of materials and energy, the most important component of the former category is waterfowl. Resident and migrant members alike rely heavily on the floating, submergent, emergent, and meadow type vegetation. Chabreck (1971b) reported that the waterfowl value of fresh marshes is greater than that of brackish marshes, which is greater than that of salt marshes. He believed that this is due to the larger number of species and greater plant coverage in fresh marsh systems. Insects, furbearers (nutria, muskrat), and other small mammals ingest vegetation, and they are in turn eaten by secondary consumers. Small fish, turtles, and invertebrates (crayfish and other crustaceans) comprise the majority of important aquatic primary consumers; they feed on submergents, phytoplankton, and decomposing peat. The survival of such aquatic fauna is directly dependent upon a volume of standing water; toxic substances and low oxygen titers in the water may have detrimental physiological effects. Suspended substances, salinity, and heat may modify the magnitude of these physiological effects. All of these primary consumers use one or more vegetative types for cover and/or nest construction.

The list of secondary consumers that prey upon primary consumers includes large fish, wading birds and shorebirds (egret, crane, heron, sandpiper, etc.), alligators, large mammals (raccoon, oppossum, armadillo, etc.), marsh hawks, and insectivorous birds. These animals also use fresh marsh vegetation for cover and/or nest construction. All the marsh consumers return materials and energy to the ecosystem via decomposition of carcasses and feces.

Summary. Several attributes of the fresh marsh differentiate it from other marsh ecosystems - a large number of plant species, deep water, and low nutrient concentrations. Soils of the fresh marshes are high in organic content due to the accumulation of peat and the lack of marine inputs. Usually the only source of mineral sediment (and its accompanying nutrient load) is upland drainage. Phosphorus is probably a limiting nutrient in many fresh marshes.

The diverse vegetation may be composed of one or more of several plant categories: submergent, floating, emergent, or meadow grasses. The primary productivity of fresh marshes ranges from moderate to high and depends on (1) nutrient availability, and (2) species composition. The latter is controlled by the hydroperiod (depth of water, duration of submergence, and frequency of submergence/emergence). Management practices are designed to regulate water regimes in order to control the biota of an area. These marshes support many animal species which man finds desirable: waterfowl, fish, furbearers, birds, and alligator.

Delta Marsh

An ecosystems diagram for the delta marsh is presented in Figure 3-8. The delta marsh ecosystem originates as a series of deltaic islands, dissected by numerous channels or passes. Formation processes have been completely described (O'Neil, 1949; Morgan, 1972); the phenomena can be simplistically viewed as concomitant forces of deposition and subsidence. The marsh that exists depends on the relative magnitude of these two forces. Construction of flood control levees has allowed subsidence to supersede deposition. This allows lakes and bays to merge; water bodies are frequently separated only by the higher portions of levees (Morgan, 1972). Nevertheless, large amounts of sediment may be deposited during floods and effect a change in the dominant vegetation type. Floating, submergent, emergent, and meadow species may be present at any given time; the abundance of each reflects the natural changes in the deltaic processes.

Unlike the typical fresh marsh, this ecosystem is not nutrient-limited. When the volumninous unidirectional flow of water decreases to a low level in the fall (September-November) of dry years, tidal inundation usually supplies ample materials and energy to the ecosystem.

The main components of the delta marsh system are the same as those of the fresh marsh. However, the storage of peat and salt in the delta marsh are less important than in the typical fresh marsh. Materials and heat are moved into and through the system via the dendritic branches of the river system. Amounts of materials and heat transported by tidal flows are relatively unimportant. Principal forcing functions from outside the system include drainage alterations (ditching, diking, and canal construction) and pollution.

Water fluxes. The mean annual discharge of the Mississippi River is approximately 12,750 m^3 (450,000 ft^3) per second. This flow regime generally follows an annual cycle: a low-water season from late August through November, followed by a relatively long flood period with a peak usually occurring in late April (Gagliano et al., 1971). This flowing water is the main transporter of materials into and out of the system. Indeed, the entire ecosystem depends on and is regulated by this discharge of water with its accompanying sediment and nutrients. The water storage in this system is the same as that discussed for the fresh marsh.

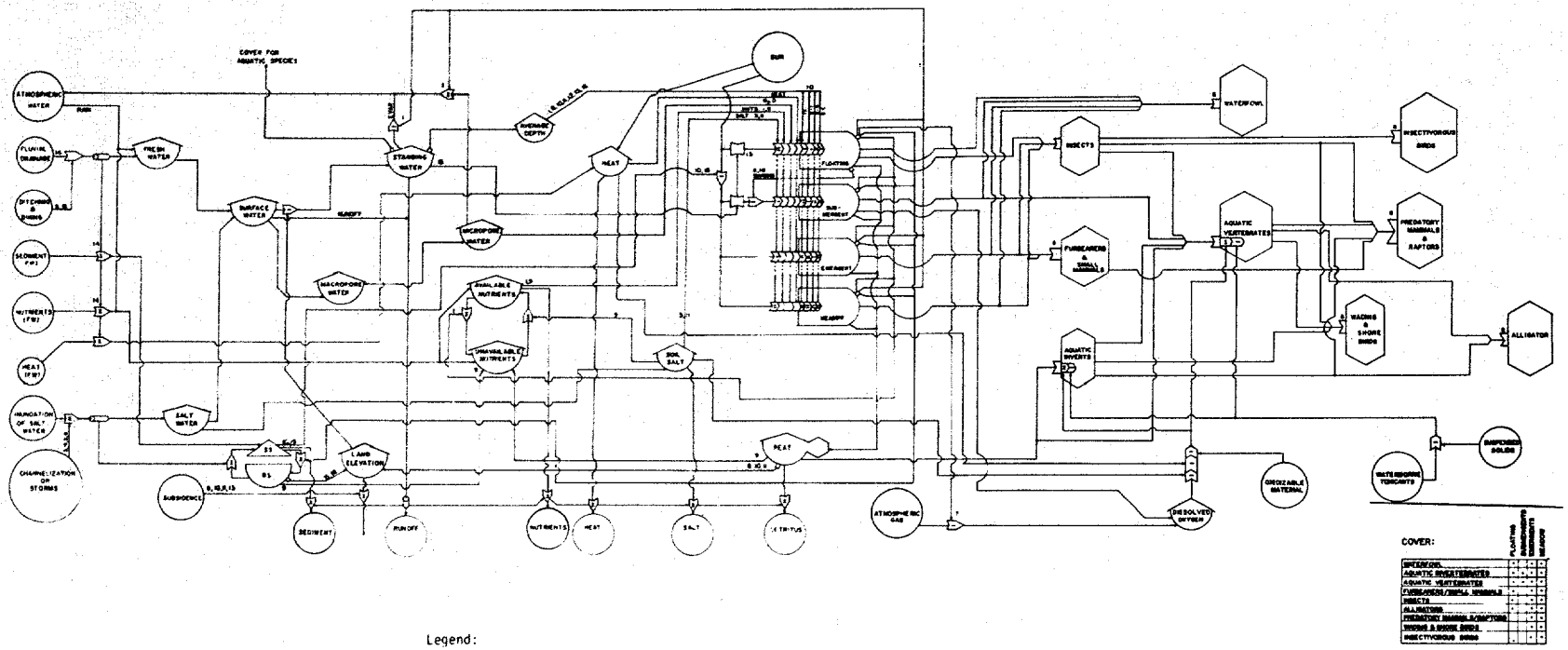

Legend:

1 - Bayley and Odum, 1976
2 - Chabreck, 1971
3 - Chabreck and Palmisano, 1973
4 - Clark and Juve, 1962
5 - Ensminger and Nichols, 1957
6 - Gagliano, Light, and Becker, 1971
7 - Martin, Zim, and Nelson, 1951
8 - Mitsch, 1976
9 - Morgan, 1972
10 - O'Neil, 1949
11 - Palmisano, 1970
12 - Penfound, 1952
13 - Penfound and Hathaway, 1938
14 - Smith, 1970
15 - Valentine, Jr., 1969
16 - Valentine, Jr., 1970

Figure 3-8. Ecosystems diagram of the delta marsh.

In this system, the most important water storage is the average water depth, the main regulator of vegetation. Natural subsidence affects this variable via land elevations. Flood protection levees and channel alterations have decreased or eliminated overbank flow; the result is decreased sediment deposition. Hence, the open ponds become deeper and frequently merge; sometimes only thin strands of levee system remain to partition them (Morgan, 1972).

The characteristics of saturated soils discussed in the description of fresh marshes are applicable to this system.

Sediment. In contrast to the highly organic soils of typical fresh marshes, the delta marsh soils are chiefly composed of mineral sediments from upland drainage. Calculations of the average sediment load of the Mississippi River approach three million tons per day (Gaglinao et al., 1971). Before levees and channels were constructed, the accretion of some of this material counteracted natural subsidence and actually resulted in the formation of new delta marsh habitat. Presently, however, a significant portion of the sediment load (previously deposited on the delta) flows through the system and is discharged into deeper water in the Gulf of Mexico, where currents carry it in a westerly direction. Notwithstanding this large discharge into the Gulf of Mexico beyond the marsh, regular annual flooding of lower levees deposits a tremendous amount of silt in interdistributary ponds. Delta NWR files indicate that turbidity and siltation effects are very significant factors in controlling vegetation.

The low organic content of most soils (less than 10 percent) is due to the relatively small amount of peat accumulation which occurs in ponds and other areas of quiet waters (Brupbacher et al., 1973).

Nutrients. Although the sources of nutrients are the same as discussed in the description of fresh marshes, concentrations of nutrients are greater. The large volume of water moving through the delta marsh ensures an opulent supply of dissolved and complexed organic and inorganic nutrients. Reactions and mechanisms occurring in saturated soils have been previously discussed and are applicable to this system.

Primary producers. All of the vegetation types of the fresh marshes may be found within the delta marsh. The largest difference between the two systems is the extreme fluctuation in species composition and abundance in the delta marsh. The vegetative types (floating, submergent, emergent, meadow) and species compositions are controlled primarily by the river discharge and by hurricanes. Thus, dominance by one or more species is ephemeral, and drastic changes in composition may occur within a one-yr period (Valentine, 1970).

Onsite management practices are minimal in this ecosystem due to the overwhelming forces of the Mississippi River. Past techniques of vegetation management (grazing, planting, burning) have been aimed at providing food and cover for waterfowl, but they have been largely inconsequential. The vegetation is destined to reflect the constant natural changes within the delta plain that are brought about by the water fluxes.

Consumers. The discussion of consumers in the fresh marsh description is applicable to the delta marsh. It should be emphasized that waterfowl and colonial birds rely heavily upon this ecosystem. Terrestrial animals are, of course, restricted to natural levees or artificially constructed high ground. The fauna may be forced to occupy a restricted area during the flooding season; food and cover can be very scarce during this period.

Summary. The delta marsh is a very dynamic system, which is dependent upon (and almost totally regulated by) the upland drainage. Riverine flows are responsible for transporting the sediment and nutrient loads that support and extend the delta. Subsidence and deposition are concomitant processes which determine water depth, the main regulator of vegetation. Vegetative composition is thus in a constant state of flux, adapting to or failing to adapt to the natural perturbations of the deltaic cycle. The total consumer biomass that can be supported by this vegetation is, in turn, highly variable. Inter- and intraspecific competition become significant when vegetation favorable to wildlife is scarce.

Levees and Spoil Banks

An ecosystems diagram for levees and spoil banks is presented in Figure 3-9. Ridges, levees, and spoil banks are the result of either artificial or natural changes in the geomorphology of the coastal substrate. Artificial levees and spoil banks are formed as a result of various coastal reclamation, developmental, or operational activities and alterations, and they are becoming increasingly numerous. Physical properties of the levee substrate are dictated in part by the kind of original material dredged, whether sand, silt, mud, or a mixture, and are therefore highly variable (Fisher et al., 1973). Newly formed levees and spoil areas are unvegetated and extremely susceptible to formed erosion and reworking. Stabilizing vegetation can modify these processes.

Natural ridges, commonly referred to as cheniers in Louisiana and parts of Texas, are geologic formations produced by interactions between the depositional processes of riverine systems, primarily the Mississippi River delta, and the erosional mechanisms of coastal waters (Chabreck, 1972; Fisher et al., 1973). Chenier ridges are typically narrow, elongate, and composed of sand and silt with minor amounts of shell material (Chabreck, 1972). Relief is typically low, and elevation ranges from one to two m (three to six ft) above mean sea level. Chenier ridges in Texas are restricted in distribution, are largely grass covered, and only locally support scrub oak vegetation. Ridges in Louisiana are more extensive, well defined, and characteristically support dense live oak stands (O'Neil, 1949; Fisher et al., 1973). Intervening lowlands or swales between chenier ridges support either brackish or salt marshes.

Natural levees in the lower Mississippi drainage form through the processes of reworking depositional materials. Relief is usually less than 2 m (6 ft), and width is normally less than 305 m (1,000 ft). Tree growth may be dense on the higher levees (O'Neil, 1949).

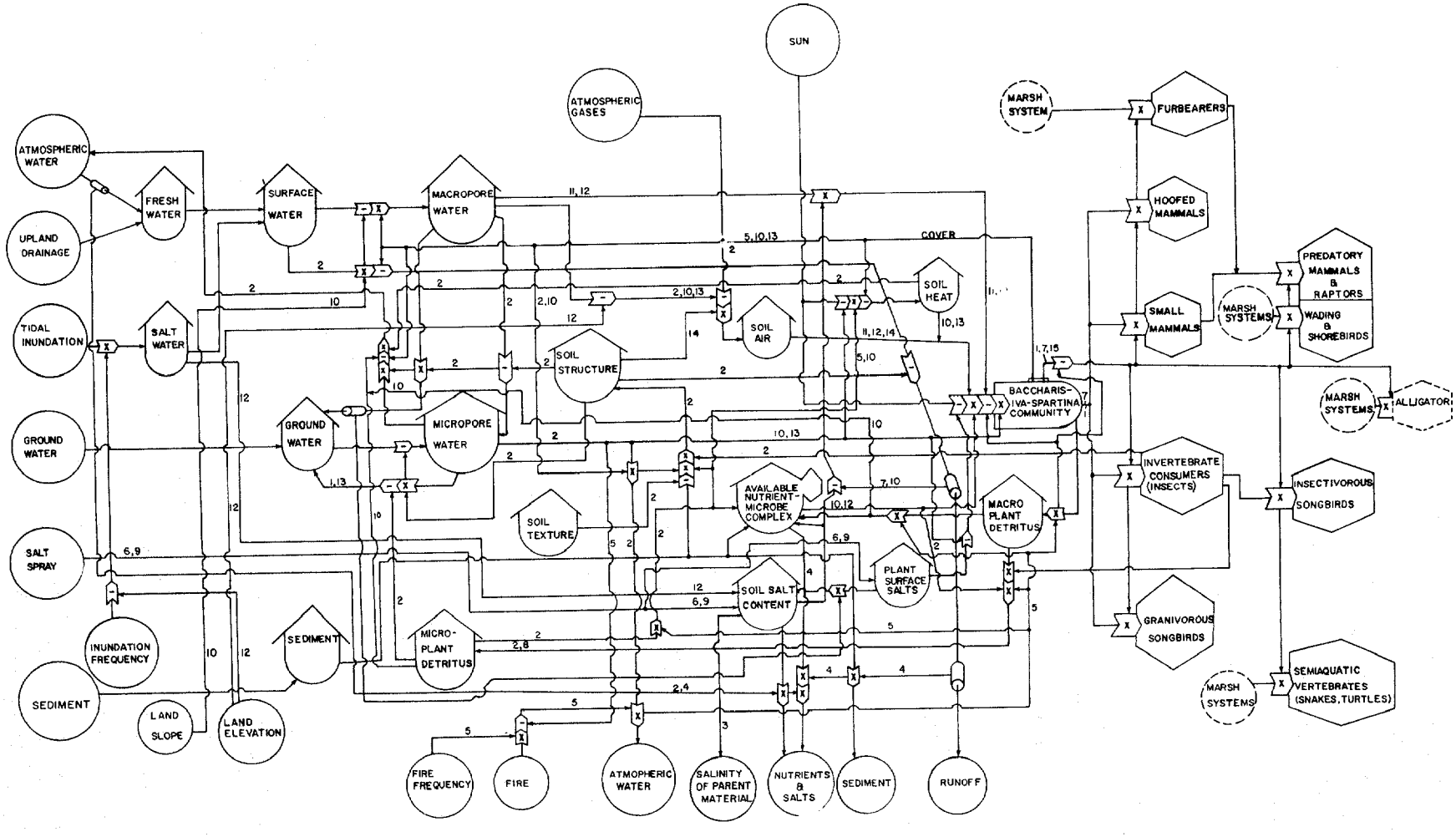

Legend:

1 - Bahr, Jr., Day, Jr., Gayle, Gooselink, Hopkinson, Smith, and Stellar, 1977
2 - Buckman and Brady, 1969
3 - Chabreck, 1972
4 - Darnell, 1976
5 - Daubenmire, 1968
6 - Johnson, Hillestad, Shanholtzer, and Shanholtzer, 1974
7 - Lay and O'Neil, 1942
8 - Odum, 1971
9 - Oosting, 1954
10 - Oosting, 1956
11 - Penfound, 1952
12 - Penfound and Hathaway, 1938
13 - Spurr, 1964
14 - Walker and Collier, 1969
15 - Willingham, Cornaby, and Engstrom, 1975

Figure 3-9. Ecosystems diagram of levees and spoil banks.

The elevated cheniers, levees, and spoil areas function as important regulators of the hydrologic regimes in adjacent marsh and estuarine systems, provide roosting and resting sites for wildlife, and serve as transportation avenues for the "invasion" of wetlands by terrestrial organisms. Structurally, the system combines wetland and terrestrial vegetation, and it typically supports abundant above-ground biomass (Bahr et al., 1977). As such, then, these elevated systems become transitional zones between the maritime woodland or upland grasslands and the coastal marshes. Depending on the location of a specific levee or ridge system, it may support xeric marsh or hydric forest components. Regardless of its specific location, the successional direction of the biotic elements is toward the upland ecosystem. Several key abiotic factors regulate the rate and extent of this movement; these are soil oxygen (Penfound and Hathaway, 1938; Penfound, 1952; Walker and Collier, 1969), elevation (Penfound and Hathaway, 1938; Wells, 1928), soil mosture (Kerwin and Pedigo, 1971); and soil water salinity (Penfound and Hathaway, 1938). These parameters and other regulating functions are discussed below.

Like the upland ecosystem, the conceptual model of this system consists of two primary components: the abiotic system and the biotic system. Fundamental interactions between these components are similar to those of the upland model.

Abiotic system. The abiotic system receives external inputs (driving forces) in the forms of sunlight, atmospheric water and gases, surface water from upland drainage (Bourn and Cottam, 1950) and occasional tidal inundation (Penfound and Hathaway, 1938), gulf salt spray (E. Odum, 1971; Au, 1974), transported sediments (Fisher et al., 1973), and groundwater flowing through a hydrologic gradient. Additional system inputs, such as nutrients and detritus, are received from the biotic community occupying the site. The abiotic system provides outputs as flows that regulate community development; these outputs include soil gases, soil moisture, soil salts, plant surface salts, nutrients, and soil heat. Finally, certain outputs of the abiotic component are lost from this system, at least temporarily, to become potential inputs to adjacent ecosystems such as the coastal marshes. System losses include evaporated water, leached nutrients and salts, transported detritus, surface-water runoff, and most significantly, eroded soil materials. Transported soil materials released by erosion contribute to increased water turbidity and sedimentation rates in adjacent aquatic systems (Darnell, 1976).

As in the upland ecosystems, the abiotic component of the levee system is dominated by one important subsystem, the hydrologic cycle. This cycle regulates the critical edaphic parameters of aeration, moisture, and salinity, which in turn determine the specific nature of the producer component. It is therefore essential to consider the hydrologic cycle in detail, pointing out the factors which regulate flows within and between systems, describing the function of each output, and relating the hydrology of this system to surrounding systems.

The particular hydrologic characteristics of levee, ridge, and spoil systems may vary considerably between types depending on elevation, parent material and the nature of the surrounding ecosystems. The primary sources of water

input to the local hydrologic system are rainfall, upland drainage, and tidal inundations. Of these, rainfall is most often the source. However, low levees or ridges in adjacent coastal areas may receive significant water inputs through infrequent tidal or storm surges. Natural or artificial levees adjoining major streams may receive major hydrologic inputs from periodic flooding. In either situation, however, increasing elevation above the surrounding landscape will reduce the frequency of inundation and thus the contribution from these sources (Penfound and Hathaway, 1938; O'Neil, 1949).

Water is stored in the abiotic system as either surface water or groundwater. Surface-water storage may exist temporarily as nonpoint surface runoff or in small ponds or wet depressions in low areas on more extensive spoil banks. Groundwater is the primary reservoir for water storage.

The surface and groundwater storages interface through soil water storages. The two soil water storages (macropore and micropore) are functions of soil structure and soil texture, as covered previously in the uplands system discussion.

Soil water salinity is influenced by salt spray, tidal inundation, and, in the case of dredged levees and spoil banks, the salinity of the parent material. Salinity plays an important role in regulating the tolerance of levee vegetation to soil moisture (Penfound and Hathaway, 1938; Penfound, 1952). With progressive elevation of the soil surface above the water level, there is a progressive decrease in soil water salinity; tidal inundation is decreased and surface water percolation is increased (Penfound and Hathaway, 1938). Soil texture and soil structure regulate the rate of percolation.

Evaporation occurs through pathways similar to those of the upland model. Moisture losses result from micropore water, from plant transpiration, and from the surface of existing standing water. Climatic conditions regulate the evaporation rate from these sources. Soil heat, soil structure, amount of organic detritus in the soil, and plant cover regulate the rate of micropore water evaporation.

Surface water percolation into the soil macropore spaces is regulated by land slope and vegetative cover. Increasing land slope tends to reduce percolation rates, but the presence of plant cover will increase this rate (Spurr, 1964). Water filtering through the soil horizons may enter the groundwater storage or be retained as soil mosture. The rate and extent of downward percolation is affected by soil structure, texture, clay content, and the concentration of organic materials. Organic materials and clay particles have high water-retention properties. In the case of man-made levees and spoil banks, excavation leaves the parent material less compact than the original state, increasing its permeability and susceptiblity to erosion (Fisher et al., 1973). Excavation in saline environments also facilitates the rapid oxidation of organic soil materials, which leads to changes in soil pH and potential shifts of plant composition. Throughout much of the low-lying coastal areas, the groundwater level is near the surface and receives percolated water. The

hydrologic gradient moves groundwater into adjacent coastal marshes where it contributes to the standing-water storage.

Levees, ridges, and spoil areas have effects on other, more profound, hydrologic aspects of the coastal marshes. Drainage patterns (Chabreck, 1972), water table heights (Chapman, 1960), salinity regimes (Odum, 1967), sedimentation rates (Fisher et al., 1973), and nutrient flows (Darnell, 1976) are regulated by these topographic features. The coastal marsh is a semiaquatic system in equilibrium with the prevailing climatic, hydrographic, geological, and biological forces of the coast. Abrupt changes or even slight modifications in the hydrologic character by alterations of the local topographic relief through dredging and spoiling activities upset the equilibrium and greatly modify the biological characteristics of the system (Fisher et al., 1973; Darnell, 1976).

The remaining abiotic aspects of the levee, ridge, and spoil bank system involve the same linkages and relative relationships as the abiotic components of the upland ecosystem. These system regulators include soil heat, plant surface salts, and nutrient-microbe cycle, leaching of salts and nutrients to the subsoil, fire, and additional aspects of detrital decomposition and incorporation into the soil. The reader is referred to the appropriate sections of the upland model for further information.

Biotic system. The plant communities of the levees, ridges, and other elevated marsh sites can differ markedly from the surrounding marsh biota. Soil saturation (macropore water), soil oxygen, and soil water salinity are the three primary regulators determining specific plant communities. Plants exhibit an inverse tolerance to soil moisture and soil aeration; soil water salinity can moderate these levels substantially (Penfound and Hathaway, 1938).

Aggregation of the substrate produces a lowering of the water table and a corresponding increase in soil aeration. Marsh species favored by water-saturated soils are replaced by more efficient species favoring drier, well aerated soils. Under certain circumstances, typical marsh species (*Spartina patens*, for example) may invade or occupy high sites if the soil water concentration is relatively large and highly saline. Species with less salt tolerance will then be restricted to higher, drier elevations. As salinity levels decrease, the same species will occupy progressively lower elevations where soil moisture levels are greater and soil oxygen levels are lower (Penfound, 1952).

Groundsel (*Baccharis halimifolia*) and marsh elder (*Iva frutescens*) are characteristic wood composites which rapidly invade new levees and spoil areas. Under soil conditions of low moisture and moderate to high salinity, such as exist in brackish or salt marshes, these two species may dominate and constitute the climax community. In other instances where the soil's zone of aeration is sufficiently developed and the soil water is virtually fresh, such as in fresh marshes, bottomland sites, deltas, and older cheniers, these early invaders will be replaced by forest seres: for example, live oak scrub, maritime forest, or bottomland hardwoods (Wells, 1928; Monte, 1975).

Species diversity increases on levees and ridges as a larger variety of plants are capable of tolerating the more favorable growth conditions (Spindler and Noble, 1974). Plant biomass levels may meet or exceed production levels in adjacent marsh systems (Willingham et al., 1975). Dead plant biomass enters the detrital storage and may contribute to soil enrichment through the microbe-nutrient complex, or it may be exported to adjacent systems through surface runoff (Buckman and Brady, 1969; Willingham et al., 1975; Darnell, 1976). Plant biomass increases the infiltration rate of surface water into the soil macropore water, reduces the rate of surface water runoff, and thereby diminishes the associated erosion processes. This particular aspect is important in stabilizing new levee and spoil areas (Darnell, 1976).

Plant succession on spoil banks and levees is regulated by two agents, fire and subsidence. As in other systems, fire retards succession or returns it to earlier seres. On coastal marsh levees, woody growth, typically groundsel, will be replaced by marshhay cordgrass or other grassy species following repeated burning. Pioneering species are encouraged and species diversity is increased (Spindler and Noble, 1974). Subsidence of the levee system will cause a return to the marsh vegetation that existed before land elevation occurred (Bourn and Cottam, 1950; Spindler and Noble, 1974).

Terrestrial and semiaquatic consumer groups derive various inputs from tne increased habitat diversity associated with elevated sites. The type and amount of inputs received depends upon the cover types present, the system's extent, its location, and the local faunal species.

Elevated levees and ridges serve as travel lanes for terrestrial organisms feeding in the wetlands but residing in nearby uplands - for example, white-tailed deer, raccoon, coyote and livestock (Lay and O'Neil, 1942). In addition, marsh levees and spoil areas may function as habitat extensions for species typically associated with more upland environs: for example, swamp rabbit (Sylvilagus aquaticus), eastern cottontail (Sylvilagus floridanus), hispid cotton rat, bobwhite, and numerous other granivorous songbirds. The stratified and often dense vegetation can fulfill particular nesting, refuge, and resting cover requirements for numerous wetland species. Nutria, muskrat, mink (Mustela vison), otter (Lutra canadensis), alligator, and numerous snakes routinely use high points in the marsh as sunning or resting locations (Lay and O'Neil, 1942). Herons and egrets may nest or roost in the woody growth atop levees. Many species of nesting birds are attracted by the diversity of plant strata, plant composition, and abundant insect populations. Cheniers and levees provide refuge areas during periods of high water in the marsh (Lay and O'Neil, 1942).

NATIONAL WILDLIFE REFUGE DESCRIPTIONS

This section contains a description of the location, geology, soils and topography, climatology, hydrology, vegetation, and wildlife of each of the refuges studied. Figure 3-10 shows the ecosystems present in each of the refuges.

Ecosystem \ Refuge	Aransas	Brazoria	San Bernard	Sabine	Delta
Grassland	●	●	●		
Brush-grass	●	●	●		
Maritime woodlands	●				
Salt marsh	●	●	●	●	●
Brackish marsh	●	●	●	●	●
Fresh marsh				●	
Delta marsh					●
Levees and spoil banks		●	●	●	●

Figure 3-10. Refuge/ecosystem matrix.

Aransas National Wildlife Refuge

The Aransas NWR was selected as one study site to determine the ecological effects of gas and oil exploration and development in the coastal upland ecosystem of the Texas and Louisiana Gulf coast. Determination of potential ecological impacts requires: (1) a thorough understanding of the normal abiotic and biotic processes and interactions regulating the communities of concern and (2) an accurate ecological model of these systems to serve as an analytical tool for the assessment routine. The following provides a description of the environmental setting of the refuge.

Location. Aransas Refuge lies in the Texas Coastal Bend; it encompasses parts of Aransas, Refugio, and Calhoun Counties and occupies nearly 22,000 ha (55,000 acres) of the Blackjack (St. Charles) Peninsula and nearby mainland. It is bounded by St. Charles Bay and Highway 35 on the west and by Aransas, Mesquite, and San Antonio Bays on the east. St. Joseph and Matagorda Islands protect these bays from the open waters of the Gulf of Mexico.

Although located roughly in the center of a rural section of the Texas Coastal Bend, Aransas NWR is within a 4-hr drive of 2.5 million people. San Antonio, 240 km (150 mi) to the northeast, Corpus Christi, 104 km (65 mi) to the southwest, and Houston, 280 km (1975 mi) to the northeast, contribute the largest portion of this total.

Geology. Aransas Refuge is situated on a Pleistocene barrier-strand plain system known as the Ingleside complex. This system consists of a 4.8 to 12.8 km (3 to 8 mi) wide strip of deep whitish sand deposits (referred to as the Live Oak Ridge) north of Corpus Christi Bay that represents the remnants of ancient barrier islands and shorelines that formed though the erosion and redeposition of deltaic sands (Jones, 1975; McGowen et al., 1976). Deposition of these sands occurred from Baffin Bay north to San Antonio Bay and beyond. Strand-plain sand commonly overlies mud and is bound landward by Pleistocene deltaic sand, mud, and clay deposits. This boundary occurs north of the refuge.

These sand bodies form local shallow aquifers, commonly with perched water tables. Relict beach ridges are easily distinguished in aerial photography as a series of live-oak-covered ridges oriented parallel to the existing shoreline. These low ridges are locally truncated by mud-filled swales and depressions. Freshwater marshes occupy the many remnant swales and relict drainage systems that were cut into the strand-plain sand. Mud-veneered sheet sands (derived from outwash and eolian sand from the stand plain) are located inland (northwest corner of the refuge, near Burgentine Lake) of the main strand-plain sand body (McGowen et al., 1976).

Soils and topography. Refuge topography ranges from nearly level to gently undulating. The land slopes slowly but steadily southward toward the coastline. Slope gradients are generally less than 5 percent (frequently much less), but some remnant dune areas of the interior may approach as much as 12 percent.

Shallow poorly drained depressions are scattered throughout the uplands and may exist as either fresh marshes or seasonally flooded wetlands. Elevation of the highest surface features, which are concentrated in the northeast corner of the refuge, approach 6.1 m (20 ft). Most of the refuge, however, lies at or below the 4.5-m (15-ft) elevation contour. Upland communities begin occurring above the 1.5-m (5-ft) contour (Allen, 1952).

The refuge soils belong to the Galveston-Mustang-Dianola association (USDA, 1976). Due to the geologic history of the Blackjack Peninsula, the soils are primarily deep eolian and depositional sands of low fertility and rapid permeability. Soil horizons are typically indistinct. The water table lies near the 102-cm (40-inch) depth and is normally shallow enough to maintain available moisture within reach of grass and tree roots. Upland swales and other depression areas with poor drainage may pond water permanently or seasonally, depending upon the depth of the water table. These soils have a high organic content.

Portions of Aransas Refuge north and northwest of Burgentine Lake and between St. Charles Bay and Texas State Highway 35 have soils with higher clay and silt contents (Victoria, Orelia, and Clareville series) than the strandplain sands. Consequently, these soils are more fertile and exhibit low to moderate permeability and drainage characteristics. These northermost soils are derived from lagoons which formed behind the ancient barrier islands.

Climatology. The climate is humid subtropical with warm summers. The prevailing southeasterly winds from the Gulf of Mexico provide a moderating oceanic climate. Daily temperatures are warmer in winter and cooler in summer than for inland locations. Mean annual relative humidity is estimated at 65 percent at noon. Cold air masses, greatly moderate in severity by the time they reach the Texas coast, provide seasonal variation and can produce rapid temperature reductions for a few days during the period from November to February.

Mean annual precipitation is 93.5 cm (36.8 inches), with the greatest monthly average occurring in September. March is the driest month, averaging 4.1 cm (1.6 inches). Heaviest precipitation occurs from mid-July to late October as a result of the numerous slow-moving thunderstorms or occassional tropical disturbances characteristic of the season. However, the total annual precipitation is quite variable and may fluctuate more than 50.8 cm (20 inches) between years. Therefore, alternating periods of flooding and drought conditions are characteristic of the climatic history of the area. The mean annual evaporation potential for the area ranges between 317 and 150 cm (124 and 59 inches) and thus exceeds the mean annual rainfall of 102 cm (Springer, 1975).

The long-term mean monthly temperatures (1942-71) varied from 11.1°C (52°F) in January to 30°C (86°F) in July and August. The extreme temperatures recorded during this period were -12.2°C (10°F) and 39.4°C (103°F) (Springer, 1975).

Because of its location, the Aransas Refuge is vulnerable to the sporadic hurricanes (and associated tornadoes) which typically frequent the gulf coast during late summer and fall. Storm-associated damages result from the effects of high-velocity winds and/or flooding. Water damage is caused by abnormally high tides preceding the storm and/or flooding resulting from accompanying heavy rains. The barrier islands (St. Joseph and Matatorda Islands) moderate the storm effects and thus offer significant protection.

Hydrology. The Ingleside barrier complex, which was deposited on top of impermeable clays of a preceding geologic period, lies beneath the Aransas Refuge. Underlying these impermeable clays is the gulf coast aquifer, a series of interconnected lenses and fingers of sands, silts, and clays. The source of water for the shallow (17 m, or 56 ft) surface unit is direct percolation of rainwater through the overlying sands. This water is slightly saline to saline due to saltwater seepage and leaching of wind-borne surface salts. The strata comprising the Gulf Coast aquifer slope seaward (0.5 to 0.8 m per km, or 1 to 1.5 ft per mi), and groundwater in this aquifer thus occurs under artesian flow conditions. Groundwater is recharged inland where the units outcrop (Bernard and LeBlanc, 1965).

The relatively low surface relief and the rapid permeability of the sandy substrate discourage the formation of extensive surface drainage features. Existing drainage is generally to the south and southwest via small creeks and groundwater. Burgentine, Twin, and Salt Creeks discharge into northern St. Charles Bay after collecting surface runoff from the less permeable soils of higher clay and silt content. No major rivers pass through the refuge, nor do any major creeks flow across the deep sand substrate of the peninsula. Soil erosion is not a problem.

Low-lying areas of the uplands commonly form wetlands varying from slightly wet depressions to deeper ponds and sloughs. There can be considerable annual variation in the areal coverage of these sites, depending on topography, degree of soil saturation, and annual precipitation. The largest body of standing water in the refuge uplands, Burgentine Lake, was created by the impoundment of Burgentine Creek.

Saltwater flooding associated with hurricane tidal surges can be expected to affect uplands below the 3-m (10-ft) contour. However, much of the land below an elevation of 6.1 m (20 ft) may be flooded locally when maximum storm-surge conditions are focused on this specific section of the shoreline. Inland freshwater flooding will result from stream flooding and hurricane-aftermath rainfall (Brown et al., 1974).

Vegetation. The Aransas Refuge lies in the Gulf Prairies and Marshes vegetational area of Texas (Gould, 1969). Site elevation, proximity to salt water, and fire frequency are the chief factors regulating the vegetation of the refuge. Upland terrestrial communities have been catagorized by various authors as consisting of several vegetation types: oak thickets or mottes, oak brush, savannahs, and meadows or grass-sedge flats. (Halloran, 1943; Blakey, 1947; White, 1973; Springer, 1975).

Numerous depressions ranging from less than 0.8 to more than 120 ha (2 to 300 acres) occur throughout the interior. Shallow depressions form temporary ponds, where standing water remains a few days to several weeks after flooding. Rainfall is the primary source of water. Deeper depressions form permanent lakes and ponds. Rushes, sedges, and moisture-tolerant grasses dominate. Tidal flats, brackish marshes, and salt-tolerant grasslands occur in low areas subject to tidal action; saltwort, shoregrass (Monanthochloe littoralis), and cordgrass predominate.

Review of the botanical literature describing the Gulf Coast Prairie and specifically the Aransas Refuge makes it clear that major and extensive vegetational changes are occurring among the upland communities. Numerous authors discuss the encroachment and expansion of woody vegetation, particularly live oak, over areas formerly covered by tall-grass prairies (Blakey, 1947; Johnston, 1963; Box, 1964). Although generally still considered a grassland, the area today is actually a brush-grass complex, basically a grassland with brush of various densities covering almost all sites except the deepest sands. The last hundred years have witnessed the greatest rate of change (Lehmann, 1965).

The present upland terrestrial vegetation on the refuge consists primarily of oak mottes, oak brushland, and grassy savannahs. Depressions of various sizes support wetland complexes throughout the interior, but these sites are considered to be components of the aquatic ecosystem. Live oak is unquestionably the dominant species occurring in both shrub and tree form (White, 1973). Live oak trees are scattered in small groves, or mottes, up to several hectares in size. The brush is often very dense and may reach 3 m (10 ft) in height. This species is the most aggressive local invader, and it apparently has replaced much of the original savannah (Blakey, 1947; White, 1973).

Subdominant trees and shrubs associated with live oak woodlands and brush are: redbay, laurel oak, blackjack oak (Quercus marilandica), wax myrtle, American beauty-berry (Callicarpa americana), yaupon and sparkleberry (Vaccinium arboreum). Greenbriar (Smilax, spp.) and mustang grape (Vitis mustangensis) are common woody vines (White, 1973). It is clear this association is equivalent, if not identical, to the maritime woodlands of the Southeastern Coastal Plain as described by various authors (Wells and Shunk, 1931; Oosting, 1954; Bordeau and Oosting, 1959; Johnston et al., 1974), even though specific literature references to the existence of the maritime woodland in Texas are rare.

Loose sand sites between oak mottes and brush complexes, near swales, and in a strip 50 to 100 m (165 to 330 ft) broad along the bay fronts are covered by small patches of upland prairie. Where not too badly grazed, these prairies are composed mostly of little bluestem (Schizachyrium scoparius var. littoralis), switch grass (Panicum virgatum), and gulfdune paspalum (Paspalum monostachyum). Grazing reduces the abundance of these species, which then are replaced by a great variety of grasses and forbs. Many herbaceous species rare or even lacking in undisturbed stands assume importance upon disturbance. Undisturbed grass lands are uncommon on the Gulf Coastal Plain (Johnston, 1955; Box, 1964).

For the purposes of this investigation, the terrestrial communities of the Aransas uplands are catagorized as maritime woodland, coastal grasslands, and brush-grass ecotone. The ecotonal community represents the major successional stage in the natural transition from coastal grasslands (bluestem grasslands) to maritime woodland (live oak forest). The transition rate and direction are effectively regulated by several important environmental factors. These factors were described in the ecological analysis of the coastal uplands.

Wildlife. Because the local abundance and diversity of wildlife populations are directly tied to the heterogeneity of the existing plant communities, the Aransas Refuge, with its diverse habitat variation, supports and outstanding wildlife population. Three endangered species are included among the more than 300 species of birds and 35 species of mammals that utilize the refuge. The most widely publicized member of this category is the whooping crane. The refuge, adjacent bays, and nearby islands comprise the principal wintering ground for the world's last ancestral flock of whooping cranes, North America's largest and rarest migratory bird. The birds occupy the refuge from mid-October to mid-April. Other resident endangered species include the eastern brown pelican (*Pelecanus occidentalis carolinensis*), and Attwater's prairie chicken. Occasionally, the peregrine falcon (*Falco peregrinus*) may inhabit the refuge during migration. Over 55 species of reptiles and amphibians are found on the refuge.

Waterfowl are an important and conspicuous component of the wildlife population, particularly during the fall and winter months when local marshes, ponds, swales, and grain fields attract large wintering flocks. In 1976, a total of 3,478,530 waterfowl use-days were recorded for 21 species (USDI, 1976a). The most abundant species were the Canada goose (*Branta canadensis*), snow goose (*Chen hyperborea*), shoveler (*Spatula clypeata*), American wigeon (*Anas strepera*), green-winged teal (*Anas crecca*), and American coot (*Fulica americana*).

Upland species of particular interest associated with the maritime woodlands and brush-grass complex are the white-tailed deer, javelina, feral swine, raccoon, bobcat, coyote, fox squirrel, armadillo, turkey, and bobwhite. Rarely observed mammalian species include the ringtail (*Bassariscus astutus*), coati (*Nasua narica*), badger (*Taxidea taxus*), mountain lion (*Felis concolor*), swamp rabbit, rice rat (*Oryzomys palustris*), and pygmy mouse (*Baiomys taylori*).

The gradual expansion of the woody components (woodlands/brush-grass complex) into the grasslands has been insidious, and has had both good and bad effects upon certain wildlife species. Those species linked to the woodlands and ecotonal areas for food and cover benefit from habitat expansion; those associated with the dwindling grassland resources have experienced steady population declines (Blakey, 1947). Attwater's prairie chicken, a grassland associate, has been especially affected as broad grassy expanses have disappeared (Lehmann, 1941), while the white-tailed deer and Rio Grande turkey, ecotonal and woodland species, maintain very high population levels on the refuge (Blakey, 1947; White, 1973).

Live oak is the single most significant plant species influencing the dynamics of upland wildlife populations. It achieves such importance by virtue of its community dominance and its dependable supply of nutritious and preferred food. As a community dominant, live oak satisfies the diverse cover requirements of many species. Its dependable annual seed crop forms the seasonal nucleus of many consumer food webs.

Brazoria and San Bernard National Wildlife Refuges

The Brazoria and San Bernard NWR represent the two most recent additions to the NWR system in Texas. The Brazoria NWR was established in 1966, and the San Bernard NWR in 1968. Both refuges were treated as a single unit for the following reasons: (1) a shortage of baseline and historical data exists for each refuge individually; (2) the refuges are in close proximity; (3) the refuges have many similar ecological characteristics; and (4) both refuges are currently administered as one management unit. Throughout this discussion, important differences will be noted when necessary.

Location. Both the Brazoria and the San Bernard NWR lie in Brazoria County, Texas. The 4,041-ha (9,978-acre) Brazoria Refuge is located in the south central portion of the county approximately 27 km (17 mi) southeast of Angleton. Its boundary on the east and south are formed by Bastrop, Christmas, and Drum Bays; its northern boundary is Bastrop Bayou. The 7,850-ha (19,382-acre) San Bernard Refuge, located 16 km (10 mi) southwest of Freeport, is bound by the San Bernard River on the east; by Cedar Lake Creek, which is also the Matagorda County line, on the west; and by the Gulf of Mexico on the south. Both refuges lie within easy driving distance of Houston, Galveston, Freeport, and Texas City.

Geology. The development of the Quaternary geology in the vicinity of the San Bernard Refuge is the basis for understanding oil and gas potential, substrate characteristics, and ground fluids characteristics. The geology around the San Bernard Refuge was to a great extent affected by the relative position of sea level between the stages of glaciation. However, another important parameter was the activity of the ancestral Brazos and Colorado Rivers in combining to fill their sizable estuary between 3,000 and 1,500 yr ago, after the present sea level had been established. This coastal sedimentation has resulted in the unique characteristic on the Texas coast of a well-developed mainland-type shoreline without an offshore barrier island.

The modern Brazos River (the mouth of which was relocated in 1929) drains an area of more than 11,600 Km (44,600 mi), making it one of the largest river systems in the Gulf of Mexico basin, and therefore one of the major sources of sediment. The coastal delta lobe of this system has developed a cuspate shape representing the opposing levels of the energy involved in supplying sediment, basin subsidence, and the reworking of the sediment. Within the broad area defined by the cuspate delta, there are, of course, several subdeltaic features: natural levees, abandoned mud-filled channels, overbank flood basin silts and clays, and marshes, swamps, and lakes. The area of the San Bernard NWR is an interdistributary area between the Brazos and San Bernard fluvial systems. It

is therefore characterized by a history of interdistributary bays, lakes, subaerial plains, and distributary channels.

Groundwater withdrawal in the area is limited mainly to stock or domestic uses. The dissolved solids content of the water ranges from 850 to 3,100 mg/l, characterizing slightly to moderately saline water. The hydrologic unit tapped in the area by wells from 160 to 300 m (520 to 1,000 ft) in depth is the Chicot aquifer, a major component of the Gulf Coast aquifer. The aquifer is recharged northwest of Brazoria County.

Land surface subsidence is a concern in other portions of the Texas coastal area. However, due to the relatively small rates of withdrawal of ground fluids (whether oil, gas, or water), subsidence is not a critical problem in this rural area. Further inland, subsidence on the order of 0.06 to 0.3 m (0.2 to 1 ft) has occurred in the past 35 yr associated with water withdrawal for irrigation (Brown et al., 1974). In the coastal area of the refuge, however natural subsidence (resulting from compaction of subsurface clays under pressure of the overburden) may contribute a greater component of overall decrease in elevation. The presence of coastal lakes with shores tending to be smooth circular outlines may be taken as evidence of natural subsidence, as such geomorphic features antedate ground fluid extraction. Where marsh is dominant in low areas, ponds are confined between natural levees and have irregular shapes. Where subsidence has lowered marshes so that dominance of landform is lost to the expansion of water bodies, ponds in the low areas merge into one another so that the number of individual ponds is reduced, but the average size of each is greatly increased. Under these conditions each lake tends to establish rounded outlines (Russell, 1936).

The Brazoria NWR is at the eastern edge of the old Brazos River cuspate delta lobe, and therefore has many geological characteristics in common with the San Bernard Refuge area to the southwest. However, the Brazoria Refuge area, occurring at the fringe of the delta system rather than within the delta system between major river courses, has been subject to geological environments different from those of the San Bernard Refuge, and which are represented today by different mappable features.

In the westernmost area of the refuge are substrates representing a Pleistocene coastal upland developed between distributary channels, such as Oyster Creek to the southwest and Bastrop Bayou to the northeast, former courses of the Brazos River. This interdistributary area contains flood-basin, or overbank, deposits of mud, clay, and associated soils of the Pleistocene coastal plain.

The meandering channels of former courses of the Brazos River have resulted in several abandoned channels in the area, including Big Slough as well as other smaller distributary channels. These channels are of late Pleistocene and Holocene age. The smaller channels form mud-filled topographic lows within the previously mentioned low coastal plain. Flanking Big Slough are levee deposits resulting from overbank flooding. The levee of silt and mud is thickest

and highest adjacent to the Big Slough course, and it thins and slopes away into the adjacent interdistributary and marsh areas.

The final principal geologic entities in the Brazoria Refuge are coastal salt, brackish, and fresh marshes and associated coastal lakes. The substrate units developed by low-energy shallow-water deposition in modern time (last 1,000 yr) and, to an extent, overlap the subsiding margin of the coastal interdistributary area. The low-lying coastal area is protected from wave activity and circulating currents by Follet's and Galveston Islands. The entire Brazoria Refuge, with the exception of levees adjacent to Big Slough, lies less than 1.5 m (5 ft) above sea level.

Soils and Topography. Topography on the Brazoria Refuge ranges from nearly level to gently undulating, especially near Big Slough. The land slopes slowly but steadily toward the coastline. Slope gradients on both refuges are generally less than five percent and frequently much less. Highest surface elevations on the Brazoria Refuge approach 3 m (10 ft); however, 75 percent of the refuge is less than 1.25 m (4 ft) above mean sea level. These features are the scattered natural ridges found along the Big Slough drainage. Numerous shallow depressions pond surface waters, forming Salt, Nicks, Wolf, and Cox Lakes.

Much of the San Bernard Refuge is low-lying coastal flats, with approximately 80 percent of its area lying near the 1.5-m (5-ft) contour. The higher 3-m (10-ft) sites exist along the northern boundary. A broad shallow central depression collects and channels surface flow inward toward a complex of small lakes, ponds, and potholes called Cow Trap Lake.

The soils represented in the Brazoria Refuge are of the Harris-Morey-Clodine soil association. The Clodine series loam typifies the upland interdistributary area and the Harris series predominates (in the Soil Conservation Service classification) in the low coastal marshland (USDA, 1973).

The surficial soils represented in the San Bernard Refuge area are the result of recent sedimentation associated with channel, delta flood basin, and delta (interdistributary) plain environments. They include the Harris-Morey-Clodine (HMC) soil association, the Pledger-Miller (PM) association, and the Miller-Pledger (MP) association.

The HMC soil association covers most of the area. The Harris series contains fine silt and montmorillonitic clay typifying level coastal marshland less than 1.5 m (5 ft) above sea level and formed in saline clayey coastal sediments. The Morey series consists of poorly drained acidic soils with a light silty clay loam subsoil developed from alkaline to calcareous dry and silty sediment. The Clodine series contains coarse-grained siliceous loam developed on upland areas and typifying broad, nearly level coastal prairies.

Both PM and MP soil associations occur along the southwestern border of the refuge, flanking the San Bernard River. Coastward, the Miller series predominates with reddish clays formed in subaerial alluvium of low-level

floodplains. The Pledger series dominates further inland on high-level floodplains with calcareous, reddish, stratified clayey and silty sediments (USDA, 1973).

Climatology. The climate of the area is subtropical with short mild winters and long hot summers. High humidity and abundant evenly distributed rainfall are characteristic throughout the year. Extended periods of subfreezing temperatures are rare, as are significant amounts of snowfall.

Summer conditions extend from about May to September, with highest temperatures normally occurring during July and August. There is little variation in day-to-day weather patterns, except for an occasional tropical storm that may affect the area. The coastal circulation is influenced by sea breezes during the afternoon and evening.

Winter conditions extend from December through February, although little cold weather is experienced before mid-December. Intrusions of cool (and dry) polar air masses are generally short-lived and alternate with days of warmer weather. Fall (October and November) and spring (March and April) conditions are short-lived and are characterized by mild, pleasant weather.

The annual mean temperature is 21.1^{o}C (69.9^{o}F). The highest average daily maximum temperature, 30.8^{o}C (87.5^{o}F), occurs during August, while the lowest average daily minimum temperature, 9.6^{o}C (49.3^{o}F), occurs during January (USDC, 1971).

Monthly average rainfall ranges from a maximum of 16.8 cm (6.6 inches) in September to a minimum of 6.9 cm (2.7 inches) in March. The annual average precipitation is 116 cm (45.5 inches). Monthly precipitation extremes at Galveston vary from zero to over 66 cm (26 inches USDC, 1971).

The prevailing wind directions at Galveston are south and southeast. The annual average wind speed is 5.1 m/sec (11.5 mph) (USDC, 1973).

Thunderstorms occur most frequently during the summer season. Thunderstorm damage may result from hail, high winds, flooding, or an infrequent tornado. Tropical cyclones, including hurricanes, represent another category of serious weather disturbance. These storms lose strength rapidly as they move inland, and the greatest concern is potential damage from high winds and excessive rainfall. The close proximity of the refuges to the coast exposes both locations to the additional hazards of hurricane tides (waves and swells). The hurricane season extends from June to October, with storms most frequent during August and September.

Hydrology. Geologic formations containing fresh to slightly saline water in Brazoria County range in age from Pliocene to Holocene. These units are

the Goliad sand, Willis sand, Bently formation, Montgomery formation, Beaumont clay, and the Quaternary alluvium. The formations dip toward the Gulf at an angle greater than the slope of the land surface. They have greater depth and thickness in the gulfward direction and consequently influence subsurface hydrologic units and their water-bearing characteristics. The Chicot and Evangeline aquifers are the only hydrologic units bearing fresh or slightly saline water in Brazoria County (Sandeen and Wesselman, 1969). Except for a few sands located in the upper unit of the Chicot aquifer, water-bearing formations crop out and are recharged in counties to the north. Recharge is mostly from precipitation percolating through surface sands, but some recharge is also attributable to the San Bernard River. Flow along the hydrologic gradient follows a southeast direction toward Brazosport. Mixing of fresh and saline groundwater depends on the sequence and nature of aquifer interbedding, presence of nearby salt domes, and other subsurface features.

Surface waters in the San Bernard Refuge area drain into the San Bernard River and Intracoastal Waterway. Surface water in the Brazoria Refuge drain into the Intracoastal Waterway as well as Christmas and Drum Bays. Since both refuges are characterized by extensive lowlands and marshes with elevations of less than 1.5 m (5 ft) above mean sea level, these areas are very poorly drained. Internal drainage and runoff are very slow. Drainage occurs primarily through a series of ponds, lakes, and interconnecting streams, which eventually discharge into the Intracoastal Waterway or other flowing watercourses. A permanent water table fluctuates from the soil surface to a depth of about 127 cm (50 inches) (USDA, 1973).

Periodic flooding of areas below the 1.5-m (5-ft) may result from (1) high tides and hurricane-induced surges and (2) overflow from the San Bernard and Brazos Rivers. Consequently, most marsh areas, ponds, and lakes below the 1.5-m (5-ft) line contain brackish water; salinity varies according to the time of year, available precipitation, and degree of flooding (Seadock, 1974).

Vegetation. Floristically, the Brazoria and San Bernard Refuges are very similar in composition and in structure. Both refuges lie in the Gulf Prairies and Marshes vegetational area of Texas (Gould, 1969). Site elevation, which regulates surface hydrologic regime, and site proximity to salt water are the primary regulatory factors of the coastal vegetation. Brackish to freshwater marsh flora and coastal grasses, primarily gulf cordgrass (*Spartina spartinae*), are the two dominant vegetation types.

The marsh systems are typically located in low-lying, often inundated sites. Salinity varies locally, being influenced by the ratio of upland freshwater drainage to saltwater inundation; marsh salinity decreases northward. Marshhay cordgrass, saltgrass, and several species of bulrush are common brackish marsh species. Smooth cordgrass dominates less extensively, chiefly along shores of bays, bayous, the Intracoastal Waterway, and numerous low depressions frequently exposed to saline water. Several fairly extensive stands of smooth cordgrass exist in the Brazoria Refuge along the shores of Bastrop and Drum Bays. Areas of high salinity represent an edaphic climax because soil salinity limits plant

growth to a few halophytic species such as saltgrass, glasswort, saltwort, and salt matrimony-wine (Lycium carolinianum).

The coastal grassland or prairie lies further inland and may extend inland 8 to 24 cm (5 to 15 mi) in certain coastal sectors. The coastal grasslands resemble a mosaic, with the brackish marshes in a discontinuous pattern, frequently along lines of irregular elevation. The gulf cordgrass vegetation type is another stable, edaphic climax system maintained by high soil salinities resulting from irregular brackish or saltwater inundation. Once established, no apparent changes in its composition normally occur, unless disruptive forces such as overgrazing or increased standing water are introduced. Groundsel and marsh elder are two common woody species associated with recently disturbed marsh and coastal prairie sites. These two associates characteristically grow on recent spoil banks, spoil levees, access canals, and well pads - wherever the substrate has been devegetated and abandoned.

Other less extensive cover types include some elements of the maritime woodlands, primarily live oak mottes along the northwestern corner of the San Bernard Refuge. These components appear as the gulf cordgrass system blends into more typically upland systems. Several isolated depressions in the Brazoria Refuge support two or three small fresh marsh systems. The ecosystems are located in the northeast corner of the refuge near Bastrop Bayou. One unique aspect of Brazoria's floristic resources is the presence of one of the NWR system's 174 Natural Research Areas. This unit preserves 70.8 ha (175 acres) of southern cordgrass prairie on Christmas Point for future research (USDI, 1975).

Wildlife. Without doubt, the major wildlife attraction of these two refuges is the large number of waterfowl, particularly the vast flocks of snow geese that appear each winter. The coastal marshes, ponds, swales, and grain fields provide favorable habitat conditions for large segments of the central flyway's wintering waterfowl population. Personnel of the San Bernard Refuge counted peak populations of 100,000 to 103,000 snow geese and 14,000 to 16,000 ducks, primarily, green-winged teal, shoveler, and American wigeon, during December and January 1976 (USDI, 1976b,c). The Brazoria Refuge contained similar population totals and species compositions for ducks, but only about 25,000 to 65,000 snow geese for the same period. In 1976, a total of 6,965,370 waterfowl use-days were recorded on the Brazoria Refuge (USDI, 1976b,c).

Other avian species of particular interest that frequent the refuge areas are the roseate spoonbill (Ajaia ajaja), reddish egret (Dichromanassa rufescens), white-tailed hawk (Buteo albicaudatus), wood ibis (Mycteria americana), and osprey (Pandion haliaetus). Numerous common wading birds, shorebirds, and other wetland associates exploit the diverse array of available habitats, becoming especially abundant wherever a high degree of shoreline/surface-water interspersion exists. Here heron, egret, ibis, sandpiper, and others feed primarily on crustaceans, other invertebrates, and fish that inhabit the shallow ponds, sloughs, and wet depressions.

Of the mammalian species of interest, the raccoon is the most abundant (USDI, 1976b,c). Two other common brackish marsh associates are the muskrat and nutria. Less commonly encountered is the river otter. The coyote is common to both refuges and is most frequently associated with the grasslands where it subsists on a diet of cottontail, swamp rabbit, hispid cotton rat, rice rat, and other small- to medium-sized prey. The bobcat has been encountered on the San Bernard Refuge, probably in association with the small woodland complex along Cedar Lake Creek.

The productive tidal creeks, cuts, ponds, lakes, and other estuarine areas support a very diverse biota and complex food web. The productivity of such areas is well documented. Species composition and abundance is a function of the season of the year, salinity regime, water depth, and accessibility from Gulf areas. Cow Trap Lake contains numerous oyster (*Crassostrea virginica*) reefs. Other typical estuarine species in refuge lakes, ponds, and brackish wetlands include the blue crab (*Callinectes sapidus*), young shrimp (*Peneaus* spp.), southern flounder (*Paralichthys lethostigma*), Atlantic croaker (*Micropogon undulatus*), bay anchovy (*Anchoa mitchilli*), speckled seatrout (*Cynoscion nebulosus*), and redfish (*Sciaenops ocellatus*).

The American alligator, which occurs only on the Brazoria Refuge, is the only threatened species in either refuge. This species is restricted to areas of abundant surface water with well interspersed marsh vegetation. In such shallow-water ponds, channels, and openings, the alligator becomes an efficient predator of slower fish, turtles, nutria, muskrats, snakes, and whatever else it can capture.

Delta National Wildlife Refuge

The Delta NWR is the site of some major oil and gas developments which provide the federal government with more than one million dollars in mineral revenues per year. The following is a brief description of the environmental setting of the refuge.

Location. Delta NWR is located on the east bank of the present "birdsfoot delta" of the Mississippi River. The refuge lies in Plaquemines Parish, Louisiana, about 121 km (75 mi) southeast of New Orleans; it occupies 19,749 ha (48,800 acres) of deltaic marshes, ponds, passes, and canals. Since its establishment in 1935 as a sanctuary for waterfowl, it has been a popular attraction for scientists and laymen; all visitors must drive to Venice, Louisiana (the terminus of Louisiana State Highway 23) and proceed by boat across the Mississippi River to the refuge headquarters.

Geology, soils, and topography. The refuge lands consist of alluvium deposited by the Mississippi River over the past three to four centuries. Topography generally consists of low islands cut by numerous "passes," or channels. The only solid ground is found on the natural levees occupying the immediate banks of the passes. Land slopes downward from the top of these

levees toward the interior of the islands, with finger-like extensions penetrating several marsh types, and it terminates in open "inside ponds."

The geologic development of the entire Mississippi River Delta is closely associated with changing sea level over the past 50,000 yr, since the close of the Peorian Interglacial stage. As sea level fell at the beginning of Late Wisconsin glaciation, the Mississippi River became entrenched in the prairie terrace, deposited during the Peorian. With this entrenchment, groundwater table height fell. This resulted in oxidation, leaching, and weathering of the soil on the exposed prairie surface (Fisk and McFarlan, 1955).

As the Late Wisconsin glaciation decreased, raising the sea level toward its present level, the river gradient and carrying capacity decreased. The entrenched valley was filled by a sequence of sands and gravels under fine sands, silts, and clays. In the late phase of sea level rise, over the last 5,000 yr, the Mississippi River prograded its delta over 11,395,900 ha (44,000 square mi) of the continental shelf and slope, depositing more than 33,345 km^3 (8,000 cubic mi^3) of sediment (Fisk and McFarlan, 1955). Various major subdeltas were constructed, abandoned, and, to various degrees, destroyed through this period of relative sea level stability. The modern birdsfoot delta lies at the end of a 40-km (25-mi) extension of the Mississippi deltaic plain. It was initiated about 1500 A.D. (Fisk and McFarlan, 1955).

The phases of delta development may be grouped as constructional, abandonment, and destructional. The phases are the result of opposing rates of sediment accumulation and relative subsidence, the latter representing both the effects of subsurface compaction and sea level rise. In the constructional phase, deposition exceeds subsidence, and the delta progrades. In abandonment, the two processes approach equal rates. In the destructional phase, net subsidence exceeds the rate of sediment accumulation, and marshland is lost to encroachment of open water and to the action of wave and current erosion.

The constructional phase begins as a stream discharges its sediment load into a standing body of water. At this point, the stream mouth is unconfined and its channel is wide and shallow. Channel-mouth sand bars are deposited, which divert the flow of water to either side of the bar, beginning the distributary network. As the distributaries elongate, the mouth bar progresses gulfward forming long, finger-like sand deposits known as bar fingers. As the channel further develops, natural levees form from flood-water deposition of silty clay and clayey silt (Fisk and McFarlan, 1955). Sedimentary filling of broad areas between the distributaries occurs frequently as flood water is not yet confined by the levees.

The growth of the branching channel network typically favors one path over another because of differential stream gradients. The distributary with the lesser gradient shoals rapidly and is abandoned. Eventually, even the main distributary is overextended. A new channel is initiated by breaching the levees. This decline in water and sediment inflow to the previous subdelta area marks the beginning of the abandonment phase (Morgan, 1972).

While the previously described process is being repeated in the newly created subdelta, important events are continuing in the older area. First, with the decrease in frequent flooding and deposition of inorganic sediments, vegetation density increases over the broad interdistributary areas. The formation of peat layers proceeds with little contamination from the inorganic sediments. Second, the dense bar fingers and adjacent levees continue to weigh down on the underlying water-saturated clays deposited in open water (before delta progradation began). The compaction of the underlying clays allows the bar fingers to accumulate a thickness not possible in their depositonal environment alone. Finally, as this subsidence proceeds with little addition of inorganic deposits, open water gradually covers more and more land. Depressions along levee flanks form, enhanced by the subsidence of the levees and bar fingers. Ponds in the middle of the interdistributary marsh expand and coalesce. These processes of abandonment take place more gradually than those of delta construction.

As open-water areas expand, increased wave erosion occurs because of increased fetch. Longshore currents smooth the coastline of the delta. Destruction of the delta proceeds more rapidly until an abandoned distributary is reopened, reinitiating the process of delta growth.

The angle at which new distributaries leave the main channel of the river (when levee crevasses form) determines the success of that potential subdelta growth. Acute angles of distributary formation allow large volumes of water-relative to sediment transport - to pass through the channel. In contrast, as the angle of departure from the main channel increases to and beyond 90°, the proportion of water volume to sediment load decreases. Under such conditions, the new channel tends to shoal rapidly. Furthermore, distributary networks leaving the main channel at acute angles tend to exhibit simple branching patterns with few major distributaries. Because of the greater relative sediment load, bifurcation of distributaries departing at a greater angle results in complex branching and anastomosing of channels (Russell, 1936). The vast branching network of natural channels of the Delta NWR is, therefore, attributable to simple geologic processes.

The Cubit's Gap subdelta, bound on the south by Pass a Loutre, on the west by the Mississippi River, and on the north by Baptiste Collette subdelta, has developed via constructional and abandonment phases since 1838. The subdelta rapidly prograded between 1869 and 1905. Since 1932, abandonment of the subdelta has given way to the destructional phase, as evidenced by the increased acreage of open-water bodies (Morgan, 1972). The decline of the subdelta may in part be attributed to (1) decreased sediment inflow, resulting from the artificial leveeing of the Mississippi River and (2) bayou and man-made cuts within the Cubit's Gap subdelta.

Climatology. The climate of this region is typicaly of northern gulf coastal areas - warm and humid with hot summers. The prevailing winds provide a moderating effect on daily temperature extremes in summer and winter. Precipitation maxima occur in summer and winter/early springs; minima occur during autumn. Mean annual precipitation is nearly 152 cm, or 60 inches (Gagliano et

al., 1970). Mean monthly temperatures reach peaks in July and August; January is usually the coldest month of year. Mean annual temperatures for this region approach 21°C, or 70°F (Gagliano et al., 1970). Southeastern Louisiana experiences infrequent "northers" (cold air masses) during the winter; the low temperatures are usually well-buffered by the time a front reaches the delta.

Two of the most destructive hurricanes in history have come ashore near the Delta Refuge: Betsy in 1965 and Camille in 1969. Resulting economic (structural) damage was extreme, but the disruption of refuge ecosystems was moderate and transient. Flood water completely covered the marshes, thus reducing the destruction of the substrate by wave action; the storm's concomitant precipitation nullified the adverse effects of salinity. Large vegetational losses occurred as a result of the sweeping action of wind and water, but recovery was essentially complete after one year (Chabreck and Palmisano, 1973).

Vegetation. The fringe of the delta system is subject to the influence of marine waters. Consequently, there is a zone of salt marsh, dominated by smooth cordgrass, grading into a narrow zone of brackish marsh. Plants typical of this latter strip are roseau cane, saltgrass, leafy threesquare (*Scirpus robustus*), and marshhay cordgrass.

The vegetation of the bulk of the Delta Refuge is typical of fresh marshes. This is because the largest proportion of surface area consists of open ponds, which are flushed by a large volume of fresh water from the Mississippi River; the average discharge is approximately 12,742 m^3/sec, or 450,000 ft^3/sec (Gagliano et al., 1971).

The natural levees support stands of black willow (*Salix nigra*), groundsel, coffeebean (*Sesbania exaltata*), and other woody plants. Dogtooth grass (*Panicum repens*) frequently dominates the slopes of the levees.

Examination of refuge files indicates that species composition of the open ponds exhibits extreme variability through time. This is a consequence of the dynamic forces - primarily hurricanes and river discharge patterns - that interact and control the physical and chemical characteristics of the water column and substrate. Dominant species are ephemeral, and drastic changes in composition may occur within a one-yr period (Valentine, 1970; Chabreck and Palmisano, 1973). Since 1970, the dominant submerged species have included southern naiad (*Najas guadalupensis*), pondweeds (*Potamogeton* spp.), widgeongrass (*Ruppia maritima*), and coontail. Floating plants such as water hyacinth, duckweed (*Lemna minor*), and alligatorweed are abundant, except after hurricanes (Chabreck and Palmisano, 1973). Roseau cane, Eurasian watermilfoil (*Myriophyllum spicatum*), water hyssop, bulltongue, and delta duckpotato (*Sagittaria platyphylla*) dominate the emergent zones.

Wildlife. The Delta Refuge is one of the principal wintering areas for geese and ducks. Snow, Canada, and white-fronted geese (*Anser albifrons*) prefer the flats and pass forks, which usually harbor dense growths of three-square and other emergents. Wigeon, gadwall, pintail (*Anas acuta*), shovelers, and teal arrive in the fall and feed on vegetation in and near the open ponds. The mottled duck (*Anas fulvigula*) is a year-round resident.

In the warmer months, many species of wading and shorebirds inhabit the refuge. Herons, egrets, ibises, and sandpipers are abundant. Bitterns, gallinules, and rails nest in the rank vegetation of levee banks.

The system of branching levees also supports a considerable number of mammals, including white-tail deer, raccoon, swamp rabbit, and opossum. Nutria, mink, muskrat, and otter are the important furbearers found on the refuge. The nutria, released near the refuge in 1950, require annual removal by local trappers in order to keep the population in check.

The open ponds of the refuge are commercially fished for garfish, catfish, and buffalo. Other freshwater fish include shad, crappie, and bass. Brackish and salt waters near the Gulf of Mexico contain typical estuarine fish: mullet, porgy, croaker, flounder, trout, shrimp, and crab.

Sabine National Wildlife Refuge

The Sabine Refuge is the second of two that were selected as study sites in Louisiana for the determination of ecological effects of oil and gas activities in coastal wetland systems. The following is a discussion of the ecosystems present and provides a description of the environmental setting in the Sabine NWR.

Location. Sabine NWR is located in the southwestern corner of Cameron Parish, Louisiana, and occupies more than 56,680 ha (140,000 acres). The refuge is bound on the north by cultivated fields (rice) and marsh; on the south by pasture lands and coastal redges; on the east by Calcasieu Lake; and on the west by Sabine Lake and the Texas-Louisiana state border. Approximately nine km (five mi) separates the Gulf of Mexico from the souther boundary of the refuge. The refuge headquarters are located on State Highway 27 about 11 km (7 mi) south of Hackberry, Louisiana. Delta NWR, the other study site chosen in Louisiana, is about 400 km (250 mi) to the east.

Geology. The substrate of the Sabine Refuge is a relatively thin veneer of recent sediments. It was deposited on sands, silts and clays, which were lain down in the gulf coast geosyncline during the Cenozoic period. The Cenozoic, lasting 70 million yr, witnessed many marine transgressions and regressions (Williamson, 1959). However, sea level has maintained its relative position for thousands of yr. During this time, the various distributaries of the Mississippi River shifted position, providing material which was carried laterally by longshore currents to form marsh, tidal flat, and bay deposits.

During periods of slight sediment supply, wave action on the gulf shore winnowed away fine sediments and brought in nearshore shelf sands to form beach ridges, or cheniers. The alteration of sediment supply and "starvation" resulted in net progradation of the marshland, with cheniers incorporated into the marshland paralleling the coast and standing out in topographic relief. The cheniers are steep on the gulf side and slope away on their shoreward side, where washover sands and gravels are interbedded with marsh sediments (Morgan, 1972). Radiocarbon dating of mollusc shells occurring in the cheniers indicates that the area including the Sabine Refuge was formed about 2,100 yr ago. Very little of the bulk of the cheniers actually occurs on the Sabine Refuge; most are restricted to the eight-km (five-mi) wide strip of land separating the Gulf of Mexico from the refuge boundary. One exception is Back Ridge, to the west of Calcasieu Lake. Several Pleistocene terraces, rising only about 0.6 m (2 ft) above the marsh surface, are in the northeast and northwest poritons of the refuge (Van Dyck, 1963).

Other ridges not of terrace origin are the lake ridges. The ancient and larger Calcasieu and Sabine Lakes were responsible for the formation of low ridges and associated back slopes, which are located on the east and west sides of the refuge. Thus, the refuge is roughly a shallow basin - bound on the south by cheniers and on the east and west by lake-formed ridges. Networks of large and small canals and channels have disturbed this natural basin morphology within the last 50 yr (Van Dyck, 1963).

Soils and topography. Pleistocene terraces formed as deltaic deposits of the Mississippi. These subsiding units are overlain in most of the Sabine Refuge by recent alluvial and marine deposition. The general terrain is very flat, with ground elevations ranging from 0 to 0.6 m (2 ft) above sea level. A number of small lakes and potholes are interspersed throughout the Pleistocene terraces and the recent coastal marsh.

Most of the area of the refuge basin is comprised of soils in the Harris Salt Water Marsh association - saline soils (predominantly oxidized, gray, silty clays) with an organic topsoil (peats and muck formed by submergent, emergent, and floating vegetation). The soil is poorly drained because of the impervious clay hardpan. The Harris, Cheniere Variant - Palm Beach soil association comprises the soils of the cheniers. The poorly drained Harris soils make up the leeside of the relict beach ridges ot the south. The soil of the lake ridges is composed of saline clays and shallow organic matter formed by grasses (USDA, 1976). There are few differences distinguishing the general physical features of the terrace from the lake ridges; the latter are usually slightly lower in elevation.

Climatology. The climate of this area is generally humid subtropical with warm summers. Prevailing winds from the Gulf of Mexico provide a moderating oceanic climate - daily temperatures are warmer in winter and cooler in summer tan for inland locations.

The average annual rainfall is 132 cm (52 inches). Generally, the periods of highest rainfall occur in July and August, and the periods of lowest rainfall occur in September and October.

Temperatures range from around -7°C (20°F) in December and January to a high of 35°C (95°F) in July and August. Temperature extremes for the 1947-59 period were -12°C (11°F) and 38°C (100°F) (data from Hackberry, Louisiana, weather station).

Sabine Refuge is subject to occasional hurricanes, which typically develop and strike the gulf coast during late summer and fall. Storm-associated damages result from the effects of high-velocity winds and/or flooding. Although the barrier cheniers on the south afford some degree of protection, the high tides enter refuge lands via Sabine and Calcasieu Lakes and the channels penetrating the refuge.

Hydrology. The Sabine and Calcasieu Rivers empty into the lakes bearing their names. Both these lakes are important shipping lanes, and their openings into the gulf have been enlarged to facilitate ship traffic. Because the interchange of water is rapid, the salinities of the nearshore gulf and these lakes are generally similar. The refuge ground elevations are low and are greatly affected by tide levels and the Sabine and Calcasieu Lake levels.

Several large systems of bayous originally drained the refuge marshes to the west, south, and east. The drainage pattern of the western section of the refuge has been completely altered by canals. Similar canals now border the perimeter and dissect the refuge such that Calcasieu Lake, Sabine Lake, and the Gulf of Mexico are interconnected. Fresh water that drains from the marsh is therefore mixing with waters from these artificial estuaries. Natural bayous are mostly blocked or otherwise altered. Wood weirs and earthen plugs were originally placed at intersections of canals and natural drains. But these have since deteriorated, and saline water can now intrude throughout the network of canal systems which permeates the refuge.

Several impoundments have been constructed on the refuge (using levees), but they are plagued with maintenance problems. Presently, only one impoundment, containing 2,064 ha (5,100 acres) is functional. Rainfall is the sole source of fresh water; the optimal water depth is about 1.2 m (4 ft) above mean sea level.

There are relatively large supplies of hard (100-200 mg/l) water in southwestern Louisiana. Wells, ranging in depth from 60 to 210 m (200 to 700 ft), tap the Chicot aquifer, comprised of Pleistocene formations. Before the mid-1940's, the direction of groundwater flow was gulfward. Heavy pumping in the Lake Charles area has occurred since that time, and a cone of depressed groundwater level has developed. This changed the direction of coastal groundwater movement toward the north.

Vegetation. Sabine Refuge is located on the Gulf Coastal Plain. Soil salinity, elevation, and fire are the chief factors regulating vegetation on the lands. The dominant plant on all areas except the lowest elevations is marshhay cordgrass; it forms rank stands that cover thousands of acres. This dominant species is characteristic of brackish marshes throughout the entire gulf coast region. Salt grass frequently replaces marshhay cordgrass (or codominates) in low areas subject to flooding by brackish water. Rushes and sedges commonly associated with cordgrass include Olney's threesquare (*Scirpus olneyi*), saltmarsh bulrush (*Scirpus robustus*), and nutgrass (*Cyperus* sp.). Grazed lakefront meadows often harbor jointgrass (*Paspalum vaginatum*); the tail slopes of ridges are commonly dominated by bullwhip (or southern bulrush, *Scirpus californicus*), hogcane (*Spartina cynosuroides*), and/or roseau cane. The highest elevations of some ridges are often covered with the latter species and/or gulf cordgrass.

Grazing and fires can disturb the natural succession toward marshhay cordgrass and encourage the growth of annuals, such as panic grass (*Panicum dichotomiflorum*), sprangletop, and millet. These annuals are excellent duck and goose food.

Prior to the mid-1950's, sewgrass (*Cladium jamaicensis*) dominated extensive low areas of the refuge marshes. A die-off (presumably due to high soil salinity; Valentine, 1962) occurred following hurricane Audrey (1957), and these areas were invaded by emergents such as bulltongue, millet, and smartweed (*Polygonum* spp.).

The vegetation of the impoundments and natural ponds depends almost entirely on the water levels and salinities. Floating and submerged vegetation found in deeper portions of water bodies include white water lily (*Nymphaea odorata*), duckweed, pondweed, and coontail (*Ceratophyllum demersum*). Sedges, rushes, and other emergents line the borders of standing water bodies; alligatorweed is also found here. Roseau cane, maidencane, hogcane, or marshhay cordgrass may dominate the tops of levees.

Wildlife. The majority of the faunal groups of Sabine Refuge are aquatic or semiaquatic. The numerous canal spoil banks have allowed several terrestrial mammals to penetrate the interior of refuge lands - white-tailed deer, grey fox, opossum, skunk, and armadillo. Swamp rabbits, cottontails, and small rodents are also present.

Economically important mammals include the mink, otter, muskrat, and nutria. The latter two species are voracious feeders on rushes and sedges. During population explosions, they frequently denude large areas of land. These extensive "eatouts" then may become shallow ponds and undergo invasion by openwater species. When present in smaller numbers, these rodents serve as one important mechanism to opening dense stands of vegetation to waterfowl and other species (Lynch et al., 1947).

The blue-winged teal (Anas discors) and the mottled duck are residents of the areas. Migrating species include whistling duck (Dendrocygna spp.), mallard (Anas platyrhynchos), pintail, teal, wigeon, redhead (Aythya americana), scaup (Aythya spp.), canvasback (Aythya valisineria), and merganser.

Geese comprise the other important migrant group for which the refuge is managed. Canada, snow, and white-fronted geese are usually the most abundant.

Numerous wading birds and shorebirds find food and cover in the wetlands. Gallinules, rails, egrets, ibises, herons, and cormorants are the most common inhabitants of the marshes. The Sabine Refuge is a known nesting site in Louisiana for the roseate spoonbill.

The alligator is abundant in open water bodies as well as in canals and bayous. The wetlands supported large numbers of these animals through the 1950's; since then the population has been maintained through various management techniques at a level near 7,000. Poaching has frequently been a problem on the refuge since the 1960's (Van Dyck, 1963).

4. HYDROCARBON RESOURCE EXTRACTION AND TRANSPORT METHODS

INTRODUCTION

Oil and gas exploration have taken place in the Texas and Louisiana coastal region for more than half a century. New technology has resulted in a more efficient search for petroleum. However, the basic processes of petroleum exploration have not changed greatly since it first began in the coastal area.

The search for and production of oil and gas in the field must be viewed from two levels. First, there are the activities associated with the search, drilling, production, and transport of oil and gas from individual wells. This is the level with which most of the following description will be concerned. However, there is a second level that deals with patterns or groups of oil and gas activities beyond those of individual wells.

Since oil and gas exploration is extremely expensive, every effort is made to minimize expenditures. Most exploration is done in a manner to maximize both the probability of producing and the percent oil and gas extraction. Thus, well placement is deliberately planned according to the most probable geometry of petroleum-bearing formations. When a productive well is drilled outside a known producing field, exploration geologists will usually try to ascertain the size and shape of the productive formation. This will allow prediction of other likely wellsites for drilling. This knowledge has distinct advantages for the industry. The probability of achieving successful production in the area is increased. Certain facilities and manpower requirements - tank batteries, gathering lines, separator facilities, injection wells, canals, roads, gaugers, pumpers, maintenance men - may be more efficiently utilized where oil and gas wells are concentrated rather than spread far apart. It is more efficient for the mineral producer to be able to manage the field as an entire unit. Logging information and production statistics for the entire field allow more efficient and economic production of the resource. Advanced methods such as "flooding" and other secondary production techniques allow a greater percentage of the subsurface deposit to be extracted.

From the viewpoint of environmental impacts, the second level of oil and gas activities is particularly significant. While the effects of oil and gas activities for single wellsites may be readily recognizable and predictable, combinations of activities - for example, a network of canals in a marsh - may

result in impacts beyond the sum of the simple effects. The results of combinations of activities may be complicated, unpredictable, and require a broader perspective than most people are accustomed to using.

The decision process for planning wells considers the petroleum pricing structure; tax laws; economic forecasts; government regulations; international trade; and financial climate. As a result, oil and gas fields are not developed according to a single plan over a short period of time. They develop according to incremental changes in knowledge and conditions. Thus, the impacts from the second level of oil and gas activities are not predictable and are presently controlled only through management applied at the individual activity level.

Purpose

The purpose of this chapter is to describe in detail the activities that are associated with oil and gas exploration and production. Particular attention will be given to those activities that affect fish and wildlife.

Overview of Phases of Oil and Gas Activities Found On and Off Refuges

For the purpose of this study, oil and gas activities take place in three general areas: dry land, marshland, or shallow coastal waters near land. While each of these generalized areas may correspond to more than one ecosystem - for example, marshes may include fresh, intermediate, brackish, and saline types - the techniques used by the oil industry are mainly dependent upon the characteristics of the three distinct environments.

Preexploration reconnaissance. Oil and gas exploration begins with a broad reconnaisance of the area. Many geologic features indicate the presence of petroleum-bearing formations. Broad reconnaissance methods have very little effect on wildlife in the area.

Seismic surveys. After a prospective area is chosen, site-specific geophysical surveys are made. Generally these require direct access to the land or water surface under which the minerals may lie, and they may necessitate authorization, permission, permits, and payments to the mineral and surface owners. Many of the geophysical surveys utilize seismic methods, whereby shock waves transmitted to the deeper strata are reflected back to receiving units in the immediate area. Since strata may have characteristic shapes, refractions, and differences in reflectivity, it is possible to construct maps of the different formations. These maps are then examined carefully for structural features that are characteristic of oil and gas deposits. Other geophysical methods rely on measuring changes in strength or direction of fields.

Petroleum exploration companies vie for properties bearing minerals. Since the seismic survey is the major source of information regarding potential for mineral resources, the survey results are kept in strict confidence. Thus, a single property may be surveyed by different interested explorers. In addition, changes in seismic survey techniques sometimes prompt exploration companies to resurvey sites.

Land acquisition. When a potential wellsite has been located, it is necessary to secure permission and legal authorization to explore for minerals. A lease or sale is sought to allow mineral extraction. In many areas where there are wetlands, permits must now be sought from the Corps of Engineers for any dredge and fill activities. Other permits must be sought regarding water quality and publicly owned lands. On national and state wildlife refuges, special permits may be required for oil and gas exploration.

Exploration.. The actual exploration phase begins with the movement of equipment and personnel to the vicinity. First there must be access to the wellsite via road or canal, or a combination of the two. The wellsite location must be cleared and prepared for the entrance and placement of large pieces of equipment and supplies. Often special levees are necessary, either for the retention or exclusion of fluids. Auxiliary services such as water, electric power, and natural gas are sometimes required before the largest pieces of equipment enter the site and are erected.

A drill bit bores a hole to the petroleum-bearing strata. The bit is suspended from a long string of drill pipe connected end to end in order to lower the bit to the hole bottom. The entire string of drill pipe rotates, run by engines at the rig. The rotation and weight of the drill string allows the bit to bore through the substrata. Drilling mud is used to lubricate and cool the drill bit and to clear it of cuttings and transport them to the surface. In addition, the fluid is used to control pressure deep within the well and to form an impermeable seal on the bore hole sides to control seepage and contamination of other strata.

The drilling fluid is managed in pits or tanks so that cuttings may be separated and the physical and chemical characteristics of the mud may be carefully controlled. The handling of drilling mud is a technology unto itself, and there are many subtleties to the preparation, chemical composition, and management of the fluid.

Because of tremendous force and wear on the bit, it must be replaced periodically. In many cases, different types of substrata require different kinds of drill bits. Thus, all of the drill pipe must be withdrawn from the well for bit replacement, and then restrung for drilling.

The drilling operation focuses on: adding drill pipe to the string; replacing drill bits; managing the drilling fluid; monitoring the cuttings and making various tests; and carefully watching the extreme pressures often associated with various strata. There are many supporting activities that take place during drilling, including movement of supply vehicles and personnel, normal maintenance of equipment, and disposal of spent equipment and waste material. There are occasional problems on the site, often resulting from breakdowns. Usually in such cases specialized equipment is brought to the site for making repairs or for "fishing" for broken or stuck devices in the well hole.

After the hole is drilled to project depth, the well is "logged" by any of a number of methods to evaluate the formations. On the basis of these tests a determination is made to either plug the well if it is unproductive, or to "set casing" and bring the well into production.

If casing (large-diameter pipe to line the inside of the hole) is to be placed into the bore, the drilling rig lowers it to the proper position. Then cement trucks with high-pressure pumps push cement down through the casing and back up between the outside of the casing and the sides of the well hole. This anchors the casing very firmly and excludes material and pressure from other strata. (During the drilling operation, certain types of casing may be placed to protect strata from contamination or to help support layers that tend to slump.)

When the casing has been cemented, it is perforated to allow oil and gas to enter the wellbore. Special treatments such as acidizing or fracturing may be required in certain petroleum-bearing strata to facilitate the movement of fluids to the wellbore.

The rig is moved away and a "Christmas tree," an assembly of valves, pipes, and fittings to control fluid flow at the surface, is installed. The well may then be connected to a network of flowlines that lead to tank batteries or treatment devices.

Production. While drilling itself is a short-term operation typically lasting one to three months, production is long-term with a time scale often measured in decades. Production equipment generally consists of numerous separating, treatment, storage, and disposal devices. Petroleum is often associated with sedimentary formations and salt water. Thus the fluids rising through the wellbore may be a combination of oil, natural gas, sand, mud, salt water, and in some cases, hydrogen sulfide. Because natural gas and oil exist as two different chemical phases (gas and liquid) and are transported and stored in different manners, it is necessary to separate them completely near the wellsite.

The mixture from the wellhead usually travels by flowline to a separator where the gas and liquid phases are split. With very high gas pressure, extra "low-temperature" separators may be used to remove liquids with low vapor pressures that are mixed with the natural gas. When high-pressure gas leaves the wellhead, it expands and cools according to the Foule-Thompson effect. If water is present in the gas, it may freeze, blocking pipes and gas flow. Therefore, dehydrators may be used to remove the water chemically, raise temperatures, or add "antifreeze" materials to the gas. After treatment, the gas will be compressed and pumped through pipelines to users.

Oil may go through several separation stages to remove salt water and sediment. Often this simply consists of a series of settling tanks where sediment falls out and oil separates, floating on the water. The liquids are drawn off from different levels in the settling tanks, and occasionally the tanks are drained to remove the sediment. Sometimes the oil and water form an emulsion that does not readily separate. In this case a "heater-treater" is used whereby heat and chemicals cause the emulsion to disperse.

Separation of crude from water and sediment is an important process. Pipeline companies, the portion of the industry that buys and transports petroleum, and state regulatory agencies have standards of purity of crude oil. They do not allow pipeline transport of crude that does not meet the standard. Thus the purchasers of crude are assured petroleum with a specified quality. In addition, salt water and sediment cause considerable wear in pipelines, valves, and pumps. Thus, low levels of these materials are important in minimizing maintenance costs, maintenance time, and the possibility of leaks or breaks.

After treatment, the oil is stored in large tanks in a tank battery. Periodically the lease operator and pipeline gauger will meet at the tank battery to measure the amount of oil stored. After the measurement is made, the pipeline gauger will send the oil to the pipeline either by truck, barge, or by gathering lines from the tank battery to a pipeline gathering point.

The salt water evolved must be removed. In marine areas in some states it is permissible to dispose brine directly into tidal waters unfit for human or agricultural use, if the brine quality meets certain standards. In many places, brine is injected back into the ground either into old wells or into specially drilled wells. The brine injection may be part of a secondary system designed to enhance petroleum recovery.

During the production phase, activities take place at the wellsite and production equipment area nearly every day. Most activities are related to inspection, gauging, record keeping, maintenance, and operation of production equipment. Periodically, major maintenance is required at the wellsite. This is usually due to the buildup of paraffin or sediment in the wellbore, pump and casing maintenance, periodic "treatment" of the petroleum-bearing strata,

or change of production methods. At this time, "workover rigs" may be used at the site. These are smaller versions of the rigs used in well drilling, and their operation is essentially the same as the larger rigs, though on a smaller scale.

Pipelines. Pipelines are the usual means of transport of gas and crude oil to purchasers. Pipelines are usually operated by pipeline companies whose interest is the purchase, transport, and sale of petroleum products. Pipelines are designed specifically with the material to be transported and the amount of traffic in mind.

In most areas, pipelines are buried in the ground. When pipelines cross water bodies such as canals, streams, or bays, problems are encountered with burying the pipe, placing it so as not to disturb navigation, and stabilizing the banks for erosion prevention.

In areas of marsh, especially difficult problems are encountered in pipeline placement. Often, the ground is so soft that it will not support heavy equipment. As a result, several different methods have evolved for pipeline placement. In some areas, a ditch wide enough for a pipeline-laying barge is dug across the marsh. Because of environmental problems associated with these wide ditches, other methods using narrow cuts and stationary barges have evolved.

Pipeline operation involves very little actual activity other than the maintenance and checking of equipment. Airplanes are often used to fly the pipeline route and detect leaks. Because pipelines operate under high pressure, pressure-sensing devices are used to monitor pipeline status. Significant changes in pressures activate automatic equipment to close valves, should significant leaks or breaks occur.

Pipeline life varies depending upon the corrosion and inside wear of the pipe. Corrosion is a problem in most soils, particularly in wet and saline areas. Sacrificial anodes or cathodic protection is often used in conjunction with coating and wrapping pipe for corrosion protection. As the result of corrosion and wear, segments of pipe may be repaired (or replaced if costs are not prohibitive). However, after long service, new lines are put in and old ones are abandoned. With the removal of cathodic protection and the oxidation of sacrificial anodes, old pipe will eventually disintegrate.

Because of internal friction and changes of elevation, booster pumping stations are required every 64 to 80 km (40 to 50 mi) for oil transport (Davis and Cyrus, 1947). At the booster stations, there are often launchers and traps for entry and removal of pigs, scrapers, or balls. These devices are used to scour and clean the inside of the pipe of paraffin and scale, or to separate materials pumped through the pipeline.

Shutdown. Shutdown of drilling operations occurs when the drill rig is moved away. All equipment except Christmas trees and production devices are loaded onto trucks or barges for transport. The removal or leveling of roads, levees, or excavations usually depends upon the requirements of the surface owner. Roads and levees are generally left intact if there are other locations to be drilled or if there is significant production. Reserve pits and mud pits are nearly always filled and leveled.

Shutdown at the wellhead may take several forms. If a producing well has been drilled, a protective cage may be placed around the wellhead and production equipment installed nearby. If the well is only a marginal producer, it may be capped to await either further treatment or change in the petroleum price so that it becomes profitable to produce from that well. If a "dry hole" has been drilled, it is capped below the ground surface, and all equipment is removed. If a well that has been a producer ceases to produce profitably, it may be capped for "workover" at a later date. If the producing company believes that the oil-bearing formation has been depleted to such an extent that further production is not economically feasible, the well may be capped like a dry hole.

When formerly productive wells are abandoned, roads and levees are generally left intact. On occasion, breaches are made in dikes and levees, particularly in marsh areas. However, since repair can be a significant expense to a production company, it is usually done only at the request or requirement of the surface owner.

When production in an entire field is no longer feasible the surface flowlines and production equipment are removed. Unless the equipment is in very good condition, it is often sold on site for scrap since it is expensive to transport and recondition. After the field has been abandoned, the main remnants are roads, canals, levees, pipes in the ground, and concrete foundations.

DETAILED ACCOUNT OF TYPICAL OFF-REFUGE OIL AND GAS ACTIVITIES

The following is a detailed account of typical oil and gas industry methods and techniques. There are specific differences in methods and techniques required by refuge management. Except for these differences, oil and gas activities are carried out in the same manner on and off refuge lands.

Appendix A contains an outline of the activity steps described in this section. Specific estimates of activity duration and areal extent are also found in this appendix.

Preexploration

Broad reconnaissance. Broad reconnaissance methods include magnetometer surveys, inspection of aerial and satellite photos, reconnaissance for oil seeps, and the use of logging data from existing wells over long distances. Since these methods do not affect the environment in any direct manner, they will not be pursued further in this discussion.

Site-specific geophysical survey - land areas. Three major site-specific geophysical methods are used on land: gravity measurements, explosive charges, and thumpers. Gravity measurements made on site utilize a pendulum, the period of which is inversely related to the gravitational force in the area (Conner et al., 1976). Changes in gravitational force can indicate formations that bear petroleum. The instrument can be carried to the measuring point by hand. Thus for measurement, vehicle movement into and out of the area with minor clearing is usually all that is required. Ease and speed of measurement is such that numerous measurements at different points can be made in an hour. However, the measurements do not yield as much structural information as do seismic techniques.

Explosive seismic methods require entry of several vehicles into a site. Generally, survey lines are established on maps before vehicles enter the area. On the gulf coast, seismic activities may take place year-round, though summer dry periods are sometimes favored, as drier marsh conditions decrease problems of vehicle movement. Surveyors may enter the site first to accurately stake the survey lines and mark the areas where shot holes and geophones, or detectors, will be placed. Since the placement of the charges and sensors must be accurate to within a few meters, there is often a moderate amount of clearing of brush and debris in upland areas to facilitate vehicle movement and remove obstructions for the laying of connecting cables.

The survey and clearing usually require several traverses of the survey line by vehicles. The cleared or beaten-down survey line is 3 to 4 m (9 to 13 ft) wide. When the line is ready, a drilling truck, supply truck, and measuring van enter the shot line. Entryway and exit for these vehicles are usually by the most direct route unless the local land manager specifies an access pathway. The drilling van drills a shot hole, and a casing is placed in the hole to prevent caving-in due to unstable sediments (Robnett, no date). A charge (often ammonium nitrate with a detonator) is placed in the hole. The casing may or may not be completely pulled from the hole before the charge is detonated.

The holes are about 10 cm (4 inches) wide and are generally shallow (15 to 120 m, or 50 to 396 ft, deep). They are often 75 to 350 m (248 to 1,155 ft) apart, depending on the substrate. The detectors (often 24) are strung along the shot line at prescribed intervals between the holes. When laid out, they are connected to the recorders in the measuring van and two to three holes are

fired simultaneously. The detectors are retrieved and placed for the next series of shots, until the entire survey has been completed. Shot lines themselves vary in length from several hundred meters to as long as 30 km (18 mi).

Though there is much dragging, laying of cable, and explosions, explosive seismic work is accomplished rapidly. It is unusual for a line two or three km (one or two mi) long to require more than a week's operation. Because of explosive material use, human activity, and vehicle presence, fires can occur, particularly in dry grass. Consequently, seismic crews sometimes carry fire control equipment and must be alert for fire hazards.

At the end of the survey, crews remove the shot tubes and usually plug the shot holes with earth. This is done to protect shallow aquifers from surface contamination and to prevent surface areas from draining through impermeable sediment layers penetrated by the shot hole. There may be debris to pick up after shooting is complete. Vehicle exit ends this phase of preexploration activities.

In wet soils, the sequence of events is the same except that the vehicles used may be marsh buggies. In the gulf coast region two types of marsh buggies are generally used. One type has large, low-pressure rubber tires (Rol-a-gon); the other is a track-laying vehicle with wide treads. By supporting weight over a wide area, these vehicles can successfully move over marsh surfaces that may tolerate soil loads of no more than 1,200 to 2,400 kg/m^2 (250 to 500 lbs/ft^2) (Conner et al., 1976). In very wet areas, airboats may be used to move men and light equipment. In an attempt to minimize alterations of wet areas, helicopters have also been used for transportation of men and equipment.

Continuous running of marsh buggies back and forth along the same track may form ruts. In some areas, buggy operators find this advantageous since vegetation is beaten down and vehicle operation is eased. In other areas, however, repeated operation over the same track can turn very plastic soils into muck, making vehicle operation more difficult. In these areas, buggy operators are likely to drive along adjacent, parallel pathways, while still remaining as close to the shot line as possible.

Buggies transport men, materials, equipment, and sensitive instruments. Since seismic operations often involve placing men and equipment in areas that are either remote or pose access problems, time is an important consideration to seismic crews. The number of trips a buggy makes up and down the shot line, the route of travel, and the length of the working day often depend on time considerations.

The end result of a seismic survey is a chart of the pattern of reflected and refracted waves from the explosive energy source. This chart is interpreted by geologists, who are looking for characteristic oil-bearing formations and

strata. The chart is tied to accurately measured shot hole locations since precision in locating geologic features is of considerable importance. Thus, there are usually accurate maps of the shot hole locations. It is unusual, however, for the land manager to receive such a chart as a matter of routine.

Thumping, a process by which trucks drop heavy steel weights to the ground, is sometimes used in place of explosive charges. Another technique, shaking, was developed by scientists with Sinclair Research. This procedure, which they called "dinoseis," uses a controlled explosion inside a heavy mass, transferring a rapid pulse rich in high frequencies to the ground (Oil and Gas Journal, 1964).

Both methods require some clearing of vegetation for vehicle passage and geophone placement after surveyors have staked the survey line. After the thumping has taken place, geophones are retrieved and the entire operation moves to the next station until the entire line has been traversed. Since the seismic-producing devices are self contained, there is no need for postoperation removal and filling of holes. Thus, there are fewer traverses of the survey line than for explosive methods. These methods work best with dry soils.

Site-specific geophysical surveys - water areas. Water is a good medium for transferring seismic pulses. Until a few years ago, explosive charges were set off in shallow waters in much the same manner as described above for explosive methods. Explosions often stunned or killed aquatic life (St. Amant, 1971). Consequently, other devices - sparkers, propane-oxygen guns, air guns, and vibrators - were designed that emitted high frequency pulses not destructive to aquatic life. In areas of soft sediments, cores are cut for characterizing shallow strata.

In places accessible by boat or marsh buggy, there are few effects on the environment from the nonexplosive methods. Other areas may necessitate overland access to the water body. Here vegetation may have to be cleared and a temporary boat launching ramp may have to be cut through the bank. In order to locate shot points precisely on a map, electrical navigation equipment - small transmitters - may be placed at points near the water's edge for precise triangulation. Placement of these devices may require minor clearing.

Movement of the vessel back and forth to shore for equipment and crew changes or retrieval may result in slightly increased temporary erosional processes at the docking point. Overall, however, the effects of geophysical surveys are minor in shallow-water environments, since the application of the technique is indirect. The most noticeable effects may be in the transporting, launching, and retrieval of the vessel.

Access to the Site

Planning upland or marsh sites via roadways. A route is planned to reach the drilling site, usually with directness and cost of construction as prime determining factors. The American Petroleum Institute has recommended additional factors to be considered in route selection (API, 1974). These include minimizing environmental damage, presenting an acceptable appearance, accommodating other present and foreseen uses, minimizing land use, complementing present land uses, minimizing surface terrain removal, minimizing removal of trees and other natural features, complementing natural drainage patterns and features, avoiding natural flooding areas, and minimizing noise, dust, and other nuisance factors.

After the route has been selected, a survey crew enters to stake the route, indicate where culverts or bridges are to be built, indicate elevations to which dikes or levees should conform, and designate the wellsite, the pad or leveed enclosure, and areas for the pits. To accommodate surveying, a small amount of vegetation may be cleared.

In many areas, the entrance to the access road will be from a highway and through a gate. Most highways have ditches paralleling the road axis so that runoff from the main road may drain into the local drainage system. Culverts or small bridges across the roadside ditch must be placed or strengthened. The area around and above the conduit will be filled with roadfill or roadfill plus binder so that it packs into a hard, strong mound. Depending on the characteristics of the soil and fill, tamping or minor reveting may be needed for added strength. The top of this small dike is usually leveled and surfaced with shell or gravel.

When entry is through an existing gate, it may be necessary to enlarge the gateway and strengthen the gate supports. In some cases, a cattle guard will be installed. On occasion the operator will install a completely separate gate, culvert, and adjoining road so that especially heavy vehicles will not have to traverse the existing gate.

In upland areas, if no road is present, one will be constructed. Equipment - dump trucks, draglines, dozers, bucket loaders, "port-a-cans," contractors' buildings - will be moved onto the land. In many spots, earth will be stacked and packed to form the road base. Often, some of it may come from shallow borrow areas that will serve as drainage ditches on both sides of the road. Fill from other areas may be excavated and transported by truck. The fill is shaped by the dozer and bucket loader. It may be packed in some areas to make a firm base.

To accommodate drainage, concrete conduits are sometimes placed in low spots. This keeps the road from totally blocking the natural drainage and

water flow in the area. After the pipe is set, fill is placed around it and packed. Provision for drainage varies considerably and is dependent upon site-specific needs as well as the rights and authority the surface owner has for land management.

Depending on the type of fill, surfacing may be required. Usually it is shell or crushed rock delivered by truck. The material is dumped on the base and spread; no tamping is done since traffic will pack it down. Maintenance to the right-of-way is usually minimal and limited to that necessary to keep the road in good operating condition.

On occasion, a roadway across marsh areas may be built entirely with fill from outside the site. The main advantages to this method are that the fill material may be selected to have a high load-bearing capacity - a limiting factor with marsh soils - and environmental damage from borrow pits may be avoided. However, in most areas the expense of this method is prohibitive. The sequence of activities would be essentially the same as for road building on upland soils, with all fill being trucked to the site.

In most marsh areas, the base for roadways is made from the marsh soils adjacent to the roadway (if an elevated base is used). After equipment is moved to the site, a dragline begins excavation of borrow pits alongside the road and heaps the material into a long dike. The fill is very plastic. It may contain 50 to 88 percent water, and the soil portion may be 60 to 85 percent organic matter (calculated from Penfound and Hathaway, 1938). The material is difficult to dry and has a tendency to flow under heavy loads.

Depending on the requirements of the surface owner and the exploration company, conduits may be placed to allow water flow under the road. The surface drainage patterns and low spots dictate the placement of drainage pipes. In a few areas, surface owners have required the exploration company to build small bridges over particularly critical drainage pathways. Bridge construction requires pile drivers to drive foundation supports into the silt of marshes. Many piles may need to be driven to give firm support.

After the fill has been placed and drained for a short period, it may be shaped by dozers and leveled. If the original intent was to provide only a light-duty road, shell or gravel will be trucked in, dumped, and spread. However if the road will bear heavy loads such as an entire rig, a board road will be built. Levees bearing significant loads require a minimum top width of 6 to 7.5 m (20 to 25 ft) and should have 2:1 or 3:1 side slopes.

Before the boards are placed, sheeting is put directly over the fill. Polyethylene is used to exclude rain and thus keep the surface dry (Conner et al., 1976); however, in other places a mesh material is placed to stabilize the surface. Large boards are placed in various patterns, depending on the

expected load and use, to form the roadway. Conner et al. (1976) illustrate some of the typical board patterns.

Board roads are usually temporary and are removed after the site has been drilled. When the road is to be left for a long period, however, earth, river sand, and shell or gravel will be placed over the top to form a cap. Despite these precautions, heavy traffic and capillary action pump water from the marsh level up into the levee (Conner et al., 1976). This softens the fill, and after a while holes or slumping will occur at road level. If the boards are exposed to traffic, they may break into the hole. Usually the hole is filled with shell or crushed stone and a few more layers of board are added. In cases where the boards are buried, the hole is filled with shell or gravel.

In many areas, the marsh soil is stronger so that a levee is not needed. Often the board road sheeting will be laid directly over the marsh surface, without any sort of underlying layer being placed down. In this case, no preliminary steps are required before laying the boards, though small toe levees may be built on either side of the roadway to exclude unexpected high water. If built, the fill for the toe levees will come from the nearby marsh.

When marsh soil is used to build levees, draglines are the usual excavation machines. Sometimes they may operate from the newly formed levee; on other occasions they will bring their own series of board mats to move across the marsh. These mats will spread the weight over the marsh surface, though they may result in some crushing of the vegetation. Borrow pits have often been dug in a continuous line beside the levee. This can encourage drainage of the marsh area by providing a low spot into which water drains. If the marsh is above mean sea level and the tidal influence is low, water may continuously drain off the marsh surface and upper soil levels.

If the continuous ditch is near sea level and there is a moderate tidal fluctuation, salt water may intrude further into the marsh via the ditch than it did previously. The salinity regime of nearby areas may change as a result. Some land owners have required the contractor to stagger the pits so no continuous water channel is formed. However, even spots where pits are staggered or end before connecting with a drainage channel have had brackish or saline waters flow into the borrow depressions due to additional factors. Grazing cattle using the unexcavated area to cross from one side of the ditch to the other can significantly soften the soil. Biological activity, such as feeding upon vegetation by geese, muskrat, and cattle, or alligators' use of unexcavated areas as travel routes between ponds, have denuded and eroded the intact surface. Later, given the proper combination of conditions of rain and/or tide, these areas have been eroded further until open channels form.

Unless an unusual erosion problem occurs, levees are not vegetated artificially. In most areas, growth of colonizing plants on levees is rapid, and artificial seeding is not necessary.

While there is some attention paid to drainage patterns in designing the route of access, there is always a trade-off between minimizing distrubance and increasing construction costs. The balance between these often opposing forces is usually a result of a combination of legal ownership or lease status; the authority of the land manager; corporate policy; public relations; and governmental regulation. The lack of highly detailed topographic data is a serious shortcoming to this process. Large-scale topographic maps such as the U.S. Geological Survey topographic maps (1:24,000) usually have a minimum contour interval of 1.5 m (5 ft). Yet most of the area of gulf coast marshes lies below the five-ft contour on commonly available topographic maps. Thus, most of the topographic features necessary to design a sound access pathway may not be discernible within the resolution of the current data base. Since a detailed topographic survey of an area is an expensive proposition, design of access routes is dependent on use of existing topographic data, aerial photos, and impressions from site visits.

Dredged sites. Cost considerations often cause petroleum exploration companies to seek dredged access canals and wellsites. This is particularly true if the marsh soil is very mucky or if the site is located a long way from road access.

The construction of access canals begins with surveyor entry by truck, marsh buggy, or on foot. Little, if any, clearing is required since marsh vegetation generally does not stand high enough to impede vehicles. In general, surveyors place stakes to indicate the boundaries of the levee around a site and the channel pathway.

There are two general types of dredges used in petroleum canal excavation - hydraulic and bucket dredges (Davis, 1973). Bucket dredges can be of several sizes, but they all consist of a dragline, either track-mounted with movable mats or mounted on a barge or marsh buggy. Davis (1973) notes that hydraulic dredges are rarely used in oil field work, though in the process of this study one has been observed doing maintenance dredging on an oil field channel. In the past, selection of dredge type has been largely determined by economic factors. However, particular requirements such as spoil placement may dictate use of one type of dredge over another.

The typical drilling structure in shallow coastal waters is the self-contained submersible drilling barge. It generally requires a depth of 2.5 to 3 m or 8 to 10 ft (Davis, 1973), for navigation and placement; typically the canal is dredged to a width of 21 m (70 ft). Since the bays along the gulf coast are generally shallow, particularly near the marshes, channels must be dredged to approach the drilling sites. Spoil may be placed either on one or both sides of the excavated channel. Usually the spoil is submergent.

If entrance is being made from the bayside to the marsh, a channel is dredged right to the marsh edge. Spoil is placed adjacent to the channel on

the marsh surface itself. It is usual to place the excavated spoil on both sides of the channel, though land owners and/or permitting agencies may specify modifications. Erosion from boat traffic is always a problem in the access canals. Ensminger (1963) notes that dredged canals often widen, doubling in width in five yr. Many dredge operators leave 9 m (30 ft) or more of berm, the area between the edge of the dredged channel and the spoil pile, so that in the short term, erosion occurs on the unexcavated marsh soil rather than on the spoil pile. Nichols (1959) notes that the condition of the marsh surface should really dictate what kind of bucket dredge is used.

Conner et al. (1976) described the shrinkage, compaction, and water loss of spoil banks. In highly organic soils, structural problems can occur in the marsh foundation if spoil is heaped too high. The solid spoil bank may impede local marsh drainage. Thus, some surface owners require periodic breaks in the levee for drainage purposes. In areas with particularly small tidal amplitudes, the height of the spoil banks is restricted so that marsh areas behind the levee will be periodically flooded during times of high water.

Other spoil disposal techniques are occasionally used. The "broadcast method" refers to any procedure that distributes the spoil over a wide area. This can be accomplished by mechanical or hydraulic dredges. When hydraulic dredges are used, the spoil may be directed away from the immediate vicinity through the long slurry pipes. On occasion, a hopper barge could be employed, though this is expensive and rare.

Contractors doing the dredging prefer to place the spoil in the most convenient area possible. There are physical limits to the distance away from the channel a bucket dredge can place spoil. Likewise, there are cost limits to the distance hydraulic dredge spoil may be pumped. According to some estimates, each extra mile of pumping increases the cost by an amount equal to the base cost (Belaire and Alexander, 1976). However, if definite spaces between spoil piles or the discontinuous borrow pits are within equipment capability, and definite plans are available for the dredging contractor, cost increases are minor.

Most dredgers prefer to place spoil directly on top of old spoil piles or areas without special surface preparation. If spoil is placed directly on top of marsh vegetation, the matted stems, leaves, and roots can provide a more porous zone within the pile through which water may pass. Thus, to create levees relatively impermeable to water movement, it is sometimes desirable to remove surface vegetation and even part of the root zone, and then fill the area with spoil. This introduces considerably more work and expense, however.

Bucket dredges progress up a new channel, generally placing spoil on both sides. Very large dredges may work 24 hr a day, though smaller ones work mostly during daylight. There may be a number of small vessels moving back and forth, including crew and supply boats as well as small tugs. The dredges work

all the way to the wellsite location, which has a different shape and dimensions from those of the channel. After dredging is finished, the equipment is moved out of the area. Depending upon siltation rates, redredging may occur once every six months to every five yr.

Nichols (1959) reported that 19.8-m (65-ft) wide canals with 9-m (30-ft) berms separating spoil piles on both sides of the canal actually encompassed a width of 93 to 104 m (306 to 340 ft) when measured from the outer edges of the spoil piles. Thus a marsh area as wide as five to six times the canal width may be directly affected by the petroleum canal (McGinnis et al., 1972). In this case, for each meter of channel length, 100 m^2 of marsh may be affected. By extension, each km of canal length may directly affect 0.1 km^2 of marsh, converting the area into canal, berm, and spoil deposit.

Gagliano (1973) described changes in surface environments in two Louisiana oil fields. Comparing the total amount of area of channels, canals, and spoil banks to the total canal length, the ratio of area directly affected per unit length of canal may be calculated. A figure of 0.153 km^2 per km of canal length is derived by combining the figures for both areas and sampling periods. This agrees closely with the estimate from Nichols (1959).

Relatively few attempts are made to vegetate the spoil banks. In many areas there are opportunistic species that will colonize a new bank rapidly, though planting may be desirable to maximize stabilization. If the well is dry or only marginally productive, the site may be abandoned. Natural siltation may tend to fill the channel, though plugging the canal is more desirable in areas where drainage or saltwater intrusion may cause problems.

Planning access canals for field development. The petroleum industry often makes a distinction between exploration and development drilling. Exploration is usually thought to be the drilling of a "wildcat" - an oil or gas well drilled in territory not known to be productive. A development well is drilled in a proven field to increase the production and percent extraction from that field.

When an exploratory well is planned in a marsh area that can be accessed only by canal, the petroleum exploration company will try to reach the wellsite economically, weighing cost, environment, and other factors. If commercial quantities of gas or oil are found, the company will want to develop the field. This involves determining the spatial extent of the deposit and placing wells in an optimum arrangement to maximize the mineral extraction while minimizing costs. Until the spatial extent of the resource is known, little planning of access routes can be done.

Other wells may be drilled to aid in determining the extent of the resource. On the basis of test results from drilling, seismic work, etc., the field can

be defined and a development plan can be made. Potential wellsites may be mapped, but other factors may determine whether an overall access plan is made. Fields are not completely developed at one time. A few new wells may be drilled in one portion of the field over a year or several years' time. This is dictated by company policy and budget. By drilling wells only a few at a time, the company may use new logging information to better select additional wellsites. Furthermore, it is very difficult to predict the amount and type of production and transportation equipment needed for an entire field. It is more practical for the producer to provide the necessary equipment and add to it as the needs arise. Finally, the company generally will not make all of its investment in one field, but it will try to diversify to several fields.

As a result, field development does not lend itself to one-time planning as do other types of developments - subdivisions, for example - with respect to traffic access. Better information may result in changes of wellsite placement. In an effort to keep costs down, the company will try to minimize dredging distances, often dredging from one wellsite to next. This results in a "spider web" of canals having complex and unpredictable effects on the environment.

Site Preparation and Operation

In coastal areas there is generally no limit on oil and gas activities with respect to the time of year, except on refuges. Thus all phases of the industry are accomplished year round.

Location of drill sites is based on geologic judgment and experience. Deviations from exact placement can be made by slant drilling. It is possible to alter and control the direction of the cutting head as it moves down through the strata. There are limits to this process related to the drilling depth, nature of the formations, and extra stresses placed on equipment. More casing and drill pipe are required to reach a particular depth; strains on pipe joints and casing are greater; retrieval of broken equipment is more complicated. The lateral distance that can be reached by directional drilling is limited and, overall, the problems encountered increase considerably. Even so, there are benefits to be gained. In areas with access problems, several directional wells may be drilled from one central site, minimizing access and site preparation expense as well as environmental alteration.

Numerous state and Federal regulations pertain to drilling, particularly in marshes or shallow-water areas. In navigable waters, rules of the U.S. Department of Transportation, Environmental Protection Agency, and U.S. Army Corps of Engineers are applicable (e.g., 40 CFR 110.5). In Louisiana, the Louisiana Stream Board and the Louisiana Wildlife and Fisheries Commission have regulation authority, particularly for accidents, spills, and waste disposal (see Title 56, chapter 3, Stream Control: 1451, 1452, 1461, and 1462 for examples). In Texas, the Railroad Commission and Department of Water Resources (formerly the Water Quality Board) have regulatory authority under

rules such as TWQB 130.01.67.007 (1) (a-b), RRC 051.02.02.020 (B), and State water quality standards. These rules are applicable to all oil and gas activities regardless of whether the action is on private, State, or Federal holdings. The rules deal mainly with reporting spills, cleanup procedures, disposal of spoil and waste material, and precautions against fire.

Upland drilling sites. In upland areas, or on very firm marsh soils, a pad is constructed at the wellsite. Usually the equipment to build the pad is the same used in road building. Trees and brush are cut and dozers enter the site to clear the vegetation away. Site dimensions vary somewhat, depending on the equipment used and depth to be drilled. Typical site dimensions are 97 by 122 m (320 by 400 ft). The topsoil may be removed and placed elsewhere, though this is unusual. The area is graded to plan specifications, and occasionally fill may be hauled in. After the surface is leveled, it may be compacted. At the wellsite a cellar may be excavated to contain the blowout preventer; however, most modern rigs are designed to place the preventer at ground level.

Many new sites use steel tanks as circulating pits, mud reserve pits, and shaker holding pits. In some cases the cuttings are temporarily stored and hauled away, but more frequently these pits are built into the floor of the wellsite with earthen dikes bulldozed up from the earth at the site. Depending on the soil type, the pits may have to be lined with plastic sheeting or other impervious materials. However, in fine-textured soils, no lining is generally necessary, unless the mud contains toxic chemicals or is oil based. The levee height for the pits is usually 1 to 1.5 m (3 to 5 ft); they are placed close to the rig. Large rectangular pits hold cuttings and reserve mud; smaller rectangular subpits serve other functions.

The area at the wellsite (excluding the pits) is usually surfaced with crushed stone or shell, since much vehicular activity will take place. The shell is leveled and, generally, a finished pad will have an elevation of a foot or so above the surrounding land. Some small drainage ditches may be dug if surface drainage in the area will be a problem.

Marsh drilling sites. On marsh soils, it used to be the practice to create large elevated pads by digging out borrow and making a mound. This created large pits, encouraging marsh draining and further erosion. In most spots now, the rigs are located on board rig mats directly on the marsh surface. After the road or dike-building equipment finishes the road to the wellsite, a dragline enters the area. A ring levee around the entire site is built using borrow from pits outside the levee. The outside dimensions of the levee are usually no larger than 120 by 120 m (400 by 400 ft). Some drillers specify that vegetation must be stripped from the marsh surface where the levee will be placed to decrease the leakage of water through the levee. The levee is built up to 1.5 to 2 m (5 to 6 ft) and undergoes the same shrinkage as the spoil banks previously described.

A sump will be dug just inside the levee all around the wellsite. This will collect water leaking in, as well as rainwater, so that it may be pumped outside the site. A reserve pit for produced mud may be excavated within the site and lined if necessary. In some areas, this pit has been as large as 91 by 91 m (300 by 300 ft). However, there is a trend to use steel pits in leveed wellsites. In older sites, the excavated pits took up as much as half the area. Trucks carrying boards enter, and a three-ply board foundation is laid directly on the marsh surface. Sometimes piles must be driven where the rig will sit to provide extra bearing capacity. The board mat may remain after drilling if further wells are placed on the site.

Dredged location sites. The dredge that prepared the access channel often continues into the wellsite location. Usually spoil is placed almost completely around the slip, keeping a berm between the edge of the dredged area and the spoil pile itself. The slip has a characteristic shape, widening from the canal width of 21 to 42 m (70 to 140 ft), and running 91 to 121 m (300 to 400 ft) long. The area that is widened beyond the channel width is the actual location for the submersible drilling platform; usually the wellhead is placed about two-thirds of the distance to the end. Slip dimensions are the result of equipment size, a typical barge being about 15 m (50 ft) wide. Generally, no mud pits are excavated since barges are used to contain the fluids. The slip is extended beyond the wellhead so there will be room for mud barges and supply barges alongside the rig during drilling.

Auxiliary services to wellsite. Services to the site are often needed. Water must be available for mud consistency control and cleaning. In areas where a water supply is readily available, the drilling company will lay temporary lines and buy water. However, in more remote locations a water well may be drilled. Sanitary facilities are usually portable chemical toilets that are moved to the site by truck. On exploratory wells, communication is achieved by radiotelephone, and electric power is obtained from diesel generators. However, when many wells are being drilled in a known field, telephone lines may be placed, and natural gas may be piped in from other wells to provide electricity.

If water is purchased for supply or if natural gas is used for fuel for generators, it is the usual practice to lay temporary surface pipelines to the wellsite. A rough route is determined, and minor brush clearing may take place along the route. Trucks with pipe and equipment move along the route. The pipe is laid directly on the ground unless it must pass some obstruction. Generally, a tractor-mounted backhoe suffices for any earthwork necessary. For ease of inspection, laying, and removal, the pipes often parallel the roads to the wellsite. When dikes run out to a marsh site, the pipes are often placed along the edge of the dike.

Usually temporary poles are used to run a telephone line to the drill site. This involves digging post holes, placing the poles, and attaching the wire to the poles. Temporary telephone lines are seldom laid directly on the ground since some wildlife species - particularly nutria - will chew off the insulation.

Equipment placement. The first pieces of equipment to enter a newly prepared site are the main components of the drilling rig. Even though a new upland or marsh fill road may be used for transport to the site, older roads are often used part of the way. Since some of the pieces of equipment are very heavy (a portable drilling rig may weigh 45 metric tons), repairing, strengthening, or shoring up of older roadways may be necessary. In upland areas, holes must be filled with sand, shell, and/or crushed gravel. Bridges or culverts need strengthening. After the vehicles have passed, repairs may be required on the roadway or conduits.

Over marsh fill roads, particularly leveed areas with board runs, soft spots must be filled with shell. Layers of board need to be respiked.

The pieces of equipment entering the site include the portable rig, power plants, power train and rotary table, drill pipe, well casing, conductor pipe, steel settling and sump pits, pumps, shaker tables, sand separators, water-well drilling equipment, dry mud, hoppers, miscellaneous tanks, storage sheds, trailers for crew, and the blowout preventer. All equipment is placed at preplanned locations.

For dredged (marine) sites, the rig, power plants, rotary table, crew facilities, and other equipment are all located on one barge, which is pushed by a tug up the channel and aligned over the planned wellhead location. The barge hull is flooded with water so that it settles to the bottom, and spuds are driven to secure it. Other equipment such as drill pipe and mud are moved by barge to the site, and the barges are made fast adjacent to the drilling rig.

Drilling activities. The actual drilling of a well generally takes one to three months. Depths drilled may range from 1,300 to 8,300 m (4,000 to 25,000 ft), though most of the shallower deposits have already been tapped in coastal areas. The formations drilled are largely Cenozoic sedimentary delta deposits - sand, silts, and clays - derived from upland drainage, intermixed with marine shales and clays. Thus, the usual drilling equipment is the rotary rig. In drilling, many of the processes are repetitive in nature. There is no clearcut progression of activities beyond the drilling, bringing a well into production, testing, and leaving of a site. Often the repetitive activities singly do not offer many actual or potential environmental effects. It is their repetitive nature and the incremental effects that may be important.

In nearly all coastal areas accessible by road, the crews change every eight hr. Thus, there is a flow of traffic back and forth along the roads during day and night. These are generally light-duty vehicles. Much heavier trucks move in and out of the site during daylight hours. These include trucks bearing drill pipe, casing, mud, and other supplies. Special service vehicles may occasionally traverse the roads. These include vacuum trucks, well-logging

trucks, cementing trucks, perforators, acid suppliers, and high-pressure pump trucks. These heavier vehicles may necessitate periodic maintenance of roads. All vehicle movement raises dust on the road, and the larger trucks in particular may be very noisy. There is a possibility that supply vehicles will spill or leak materials en route to the wellsite.

In areas inaccessible by automobile, the crew may be quartered on the barge or ferried back and forth by boat. All supplies are moved by barge or by small crew boats. Because of long distances traveled by crew vessels through canals, the boats usually move at moderately high speeds of 32 to 40 km per hr (20 to 24 mi per hr). The boats are often 7.5 to 14 m (25 to 45 ft) long and are capable of displacing a large quantity of water at speed. The narrow, restricted nature of the canals results in considerable water movement as these boats move. Water is pushed to either side as the boat passes any point, and the waves generated result in wave reflection back and forth for several minutes, particularly in narrow channels with parallel banks.

Barges and tugs do not move at the same high speeds as crew boats. However, since these vessels have deep displacement-type hulls that push a great deal of water aside, they also set up waves in canals that reflect back and forth until dampened. In addition, the wash from the large slow-rotating propellers of the tugs and deep displacement of the vessels can result in significant stirring of loose sediments in the bottom of the channel. In marine locations both types of vessels move through the canals several times each day.

In some areas where access is particularly difficult, helicopters may fly into the area to transfer equipment or personnel. When there are wide straight canals, float-planes may be used. The main effect of these aircraft is to add to the noise in the area.

Solid waste disposal. Unless given a specific variance, burning of solid wastes is prohibited in Texas. Thus, most burnable solid wastes are hauled away by truck. Burnable waste may be incinerated on sites in bays, and the ashes may be dumped in the water. Solid wastes that cannot be burned include cuttings, broken or spent equipment, and trash. Cuttings generally collect in reserve pits in upland and some marsh sites. They are generally buried and compacted after drilling. In particularly soft marsh areas, cuttings may be removed by truck or barge. In open-water sites, cuttings may be disposed of in the water if they are clean and free of oil. In cases where oil-based muds are used, or if considerable oil appears with the cuttings, they must be cleaned before they can be buried or placed in water.

Liquid wastes. Sanitary facilities are usually provided by portable toilets. The facilities must occasionally be replaced, or the holding tanks must be flushed. Specialized vehicles for removal of these wastes periodically drive to the wellsite to clean and refurbish the equipment.

Radiator fluids, transmission fluids, and lubricating oil must be periodically changed in compressors, generators, pumps, and main power drives. These fluids are usually stored in waste barrels for removal by truck.

In marsh sites, a sump located inside the levee collects the runoff from rain and levee seepage. If any oil collects in the sump, it is vacuumed off and placed in a waste-holding facility. Clean water (if it is not brine) is usually pumped out of the sump into the marsh. Rigs are built with either a curb around the work area leading to a drain and liquid storage sump or with a drip pan that drains to a storage sump. The actual activities on the deck result in the spilling of small amounts of drilling mud and other fluids. In addition, the area is kept clean by frequent washing with water. These liquids, as well as rainwater, may collect and are handled in the same manner as the sump described previously.

Drilling fluids. A considerable amount of the area at any drilling site (as much as 70 percent) is occupied with equipment for the mixing, storage, pumping, filtering, and treating of mud. The mud takes a circuit through the equipment, beginning with the suction pit and leading to the pump. The mud is pumped under pressure up through a standpipe on the rig itself, through a kelly hose, into the swivel, down through the hollow kelly, and into the drill pipe. The mud travels to the bit where it is squirted toward the cutting area, and then it travels back up the hole, outside the drill pipe to the surface. From the annulus at the wellhead, the mud travels to a shaker table where the cuttings are filtered out. The mud falls through the shaker screens, may pass through a desander and desilter, and returns to a settling tank where small-diameter particles fall to the bottom. The mud may be treated chemically and then proceed to the suction pit.

Muds may contain many types of material, but they are basically a mixture of water, clays, chemicals, and weighting substances to give a specified density. For specialized uses, muds may be acidic, neutral, or basic, or they may have an oil rather than water base. Mud may contain many different types of materials such as bentonite, tannin, caustic soda, cornstarch, redwood fiber, wood fiber, lime, corn, acid, phosphate, clay, sawdust, cottonseed hulls, and barite.

A well may produce mud if clays and shales are drilled, and more drilling mud than is really necessary may result if dilution is required. Sometimes extra mud may be needed, particularly if some strata are very permeable or if all drill pipe is removed from the holes. Excess fluids may be stored in a reserve pit to be used at another time.

Mud may be a significant investment for a driller. Thus, if other wells are being drilled nearby, a drilling operator may sell some of the mud if operations are about to be concluded. In bay areas, mud uncontaminated by hydrocarbons may be disposed of in the water. In upland areas or marsh sites with pits, some of the mud can be left to dry in the pits. Mud may need to be

neutralized or treated to remove toxic materials before disposal; similarly any residual oil must be skimmed off with a vacuum device before it can be discarded.

Treatment, testing, and bringing into production. After the hole is drilled to project depth, the strata will be tested by various means to determine potential petroleum productivity. Cores are often taken so geologists may directly test the strata of interest. Other testing methods include electric, inductive, radioactive, and sonic logging. All methods require special equipment at the scene, usually mounted in specialized trucks. The different techniques are similar in that a probe is lowered down the hole to send back information at the various depths of interest. After the logging information is collected and interpreted by geologists, a decision will be made whether to bring the well into production. If the decision is not to produce, the well is capped, and shutdown procedures begin at the site. If the decision is to produce, casing will be set in the well to the producing layers.

Since casing is larger in diameter and heavier than drill pipe, special tongs and other equipment are needed to lower it into the well. When the casing is lowered all the way and centered in the hole, cement is pumped down through the inside of the casing, out the bottom, and up the outside of the casing. The cement holds the casing firmly and permanently seals the inside of the hole. Cement trucks and special jet pumps are required for this job. Since cementing must be accomplished rapidly, there are usually several cement trucks and pumps at the site during the process.

With the casing set, one or more sets of production tubing may be lowered into the well along with "tubing packers," which are seals to help control pressure. Tubing is used inside the well to protect the casing from mechanical or corrosive damage during the life of the well and to allow better control of fluid flow (API, 1962). The well will then be brought into production. This may be as simple as drilling a little further into the strata that bear petroleum. In many cases, however, there may be numerous productive strata, and the one(s) chosen for production have casing passing through them. As a result, the casing will have to be perforated or opened to the strata. This again requires specialized trucks that enter the site. A charge is lowered to the required depth and a group of bullets, or extremely high temperature jet blasts, open the casing.

Depending on the type of strata, specialized treatment may be required. Since gulf coastal strata are essentially sedimentary, fracturing may be necessary to open up the formation. Fracturing is the pumping of sand into a formation to keep the cracks open. Again the process is accomplished with a series of truck-mounted pumps and tanks. Another common treatment is acidizing: acid is pumped under pressure into formations to open the rock. This type of treatment is often used in limestone.

Finally, the Christmas tree is set, and the equipment and facilities associated with drilling are removed. For marine sites, the procedure is essentially the same except that everything is moved by barge. Sometimes the same vehicles that service an upland site are placed on a barge and moved to the wellsite to accomplish the task.

Shutdown of drilling facilities. For the removal of equipment in upland or marsh areas with roads, it is necessary to fill in potholes, shore up weak places, and repair broken boards. The equipment is removed as quickly as possible and taken to the next drilling site. Numerous holes and pits are left behind. The cellar, if present, must be filled. The "mouse hole" and "rat hole," two temporary holes parallel to the wellbore used for temporary storage of drill pipe or casing and the kelly, are filled.

If steel mud reservoirs have been used, the mud will likely be hauled away to another location. If earthen pits are used, the mud can be hauled away or left at the site. The mud may be allowed to dry and then the levees are bulldozed over and compacted. Other methods of disposal include burying the fluid in other areas or spreading it over the ground, drying it, and plowing it into the soil. The tailings are usually buried in the shale reserve pit. These types of disposal require that the drilling fluid be clean of oil or toxicants and that the soil characteristics be appropriate to accept the mud. In areas where the pits are lined to keep the mud from seeping or to control toxic materials, it is usually necessary to remove the mud and the pit lining and dispose of them elsewhere.

Any other temporary pits such as sumps, drains, water reserve, circulating, or spoils pits are skimmed to remove any oil, covered with earth, and compacted. On upland sites, all that remains at this stage is the Christmas tree, pad, and newly covered pit area. On marsh sites, the Christmas tree, board mat, and levees remain. Depending on future plans, the mat may stay or be removed. The levees are generally left, though land owners may require that smaller levees be built around the wellhead for production equipment and that larger levees be breached.

For unsuccessful wells, there is often a state requirement for the final condition of the hole. It must contain mud and a long concrete plug near the upper end. Casing must be cut several feet below ground surface (below plow depth). In abandoned upland sites, the pad usually remains. In marsh sites with board mats, the boards are often removed completely. The land owner may require levee breaching as well. Roads and levees (on which board runs are laid) are usually not removed. If further oil and gas activity is expected, the boards on the levee may be covered with a layer of shell or crushed rock. However, if the location is to be abandoned completely, the board run is removed for use at another site. Board runs laid directly on marsh soil are nearly always removed, whether the well is a producer or not.

Some surface owners may require that covered, filled, or leveed areas be seeded and fertilized. In the majority of cases, however, these areas are revegetated by natural spread of vegetation.

To remove the equipment from marine sites, the canal must be checked to be certain it has not shoaled. If shoaling has occurred, a bucket dredge is used for maintenance. The ballast is pumped out of the drill barge; the drill barge and all the supply barges are moved to the next location. If the well was successful, production equipment and flowlines will be placed. It is common for a pile driver to enter and drive piles around the wellhead. A structure will be built around the Christmas tree for protection from collision and for access to valves and pipes.

For unsuccessful wells, the wellbore is filled with mud, and a long concrete plug is placed near the surface. Often, the surface casing will be cut more than 3 m (10 ft) below the sediment-water interface. Any pilings around a keyway are removed so there are no obstructions in the slip. If the slip and canal will not be used further, the channel may be plugged or have a wier placed in it. The construction of a plug in an exploration canal is rare since the canals are often part of a maze of canals and are eventually used for access to other sites. Construction details of canal plugs will be covered in the section dealing with pipelines in marshes.

Placement and Operation of Production Facilities

Production is divided into two phases: (1) the construction and placement of production facilities and (2) the operation of those facilities. The former phase consists of placing flowlines, treating and storage equipment, and brine-disposal equipment. The latter phase consists of the start-up of production, continuous operations procedures, and shutdown of operation.

Flowlines - upland and diked marsh. In upland and diked marsh areas, where there is the possibility of vehicle travel, flowlines are buried below the land surface (below plow depth). A route will be planned, and a survey party will enter the area to stake the route. There may be some vegetation removal at this time. Once staked, equipment is brought into the area, and enough vegetation is cleared to facilitate burying the flowline. A ditcher or a plow may be used to dig a trench for the flowline in firm soils. In very wet soils, the flowline may be placed on the levee to the wellsite location or on the marsh surface paralleling the road that leads to the wellhead. The pipe sections are coupled with tubing joints, and buried pipe may be coated to control corrosion. After placement of the pipe, the ditch is filled or a tractor is run over the plow hole. The flowline is pressure-tested, usually with a fluid at a higher pressure than expected for operation. If the pressure holds for a specified period, the line is ready for use. The flowlines reach all the way from the wellhead to the production facilities, usually no more than a few miles.

Flowlines - dredged locations. In dredged locations, production facilities are centrally located on dry land, barges, or piles. From the wellhead, the flowline leads to the marsh surface at the edge of the dredged slip. In order to reach the marsh from the wellhead (often a distance of 10 to 20 m or 33 to 66 ft), flowlines may be buried in the bottom of the slip, or they may be elevated on pilings. Once they reach the marsh proper, flowlines nearly always run on the marsh surface or are elevated slightly above it. They cross navigable canals by being buried under the canal.

A survey crew travels by boat or marsh buggy, stakes the proposed flowline route, and clears some vegetation. Since the flowline is not too unwieldy, the marsh buggy may travel along the surface carrying pipe, allowing a section-by-section connection of flowline. Supports can be placed by hand if necessary. If the situation is convenient, the pipe may be joined on the barge and pulled by the buggy.

Crossing canals that do not accommodate crewboats and supply vessels often requires the driving of piles for pipe supports. The pipe may be raised in these areas for passage of small outboard-powered boats. For larger canals, however, it is necessary to bury the pipe. A dragline digs a trench in the bottom of the canal into which the flowline is placed. Then sediment is replaced in the ditch. The ditch is usually 3 to 4 m (9 to 13 ft) deep so the flowline will be below the level usually maintained by dredges for navigation. An alternative method involves placing the flowline on the bottom initially. Then a large pump mounted on a barge pumps water under high pressure to the end of a hose. The hose is pointed at the sediment just below the pipe. The water movement suspends the sediment and creates a depression. The pipe drops into the hole, and as the hose moves away, the sediment falls out of suspension, partially filling the hole. In older canals it was the practice to bring the flowline from the marsh surface and bend it 90° down to cross a canal. However if canal banks eroded significantly, a long horizontal length of pipe hung over the water without support, potentially causing leak and obstruction problems. Now, in some areas, flowlines are buried some distance from the channel edge and gently slope down to cross beneath the canal.

Placement of equipment - upland, diked marsh. Some equipment for production must be placed very near the wellhead since it is involved in pumping fluids in or out or controlling the formation of hydrates in the flowlines.

Gas wells flow under their own pressure to the surface. Often oil will flow to the surface because of the formation of gas pressure associated with the petroleum strata. When this pressure drops, the oil must be pumped to the surface by artificial lifts. These may be mechanical, hydraulic, electric, or gas actuated. The equipment at the surface is minimal and in some cases is located wholly in the casing (electric pumps). Other production equipment is located right at the wellhead.

Most other production equipment is located at a centralized production facility. This includes freewater knockout tanks, freewater skimmers, production and test separators, heater-treaters, stock tanks, chemical tanks, filters, pumps, compressors, burning pits, and saltwater-disposal storage tanks. The steps in placing these devices are similar in both upland and diked marsh locations.

Draglines, tractor-mounted backhoes, small dozers, and trucks enter the site. Vehicles can use the previously built roads without need for repair since they are not as large and heavy as those that carry parts of the drilling rig.

Production equipment is usually permanently mounted, particularly in areas prone to hurricane-force winds. Therefore, foundations are dug so that concrete slabs can be laid. To provide for a convenient working surface, the area may be slightly graded and leveled and more shell or gravel may be brought in for surfacing. In particularly wet soils, pilings may be driven to form a stable base for the concrete foundation. Cement trucks enter the site and pour the slab after the steelwork has been set.

When the slab has cured, the prefabricated production equipment is trucked in and unloaded. The structures are erected and fastened securely to the slab. At many sites, small retaining walls are placed around stock tanks, treaters, and skimmers so that any small spill may be contained. Usually these small levees are earthen (though they may be concrete), constructed when the slab is poured. Some states have specific requirements for these retaining walls, particularly in inhabited areas.

Brine facilities may be constructed at the centralized production site. In the past, brine pits were dug into the ground and lined if soil conditions were limiting. Some states do not allow brine pits for evaporation and disposal of salt water. Instead, injection wells and disposal into marine waters are allowed if the water does not contain hydrocarbons. Impervious collecting pits for brine are allowed, though, and many producers are now using covered steel tanks for holding brine. Burning pits, to allow disposal of petroleum residues that collect in tank bottoms, are also constructed at the production site. However, state or local air control regulations may dictate whether burning is permitted.

During construction of the production facilities, connecting lines, pumps, and valves are placed between the pieces of production equipment. The connecting lines are generally buried at the original production site. However, in later additions, the connecting flowlines may be elevated. Finally, gathering lines and gas lines are connected to the tank battery and separation equipment.

Placement of equipment - dredged sites. Many fields in areas with dredged sites have centralized production facilities located on upland areas. Construction of these production facilities proceeds as described above. Centralized production facilities, however, are sometimes located on large barges or on pile foundation platforms in marsh areas or in shallow coastal waters. Wellhead production equipment such as mechanical pumps and heaters are placed on pile foundation platforms and are located either immediately over or adjacent to the well.

For barge-mounted facilities, a channel or special slip may be dug to moor the equipment. Spoil is often placed immediately adjacent to the site. Since the barge will be sunk to the bottom, there is no problem with the spoil reentering the slip. The barge is brought in under tug power and positioned. The ballast tanks are filled and the barge settles on the bottom. Often a pile driver will place piles around the edges of the barge so that it cannot move, and the barge may be anchored securely to the piles with cable or steel. Flowlines, output oil gathering lines, and gas lines are connected to the production equipment.

For equipment mounted on a pile foundation, the extent of the activities depends on the extent and permanence of the production equipment. For well pumps and heaters, piles (often concrete) are driven into the sediment, and a structure of heavy timbers or steel is fastened to the piles. Barges transport the production equipment, which is placed on the structure and connected.

Large production platforms may require extensive strengthening in soft or unstable substrate. Often pile drivers will place many piles into the sediments to serve as a foundation. The platform will be either steel or a combination of steel and concrete, poured on site. The production equipment will be transported by barge, placed, and connected.

In a few instances, production equipment is built on land made from dredge spoil. In these cases marsh areas, perhaps up to several hectares, are covered with spoil, and the land elevation is raised considerably above high water. The spoil is leveled and must undergo a lengthy drying process, depending upon its characteristics. Often levees are placed around the perimeter of the made-land to aid in protecting the facilities from flooding or releasing petroleum or wastes to adjoining lands in case of accidents. After the fill has dried, placement of production equipment follows the same sequence as on upland production sites.

Saltwater disposal facilities. Brine associated with coastal oil and gas production may range from 5.5 ppt (Mackin, 1971) to over 400 ppt (Collins, 1967). It has a highly variable character, ranging greatly in total concentration and relative ionic makeup. In upland areas, disposal is nearly always by injection well into the original formation or compatible formations. In coastal areas, disposal may be into marine waters or disposal wells.

Disposal wells may be specially drilled, though more often old wells are used. Though brine is produced at all stages of production, it is more prevalent during the latter stages when the reserves are playing out.

At the production site, treatment facilities for brine may be present. Beyond the collector tank or pit these may include: skimmer, aerator, chemical treater, sedimentation pit, filter, and pumps. A flowline runs from the brine facility to the injector well or opens directly to marine waters. The flowlines often are made of noncorroding synthetic materials, and in upland areas they are buried in the ground. The injector well or pipe opening may be a long distance from the production facilities. Thus, it is not unusual to have booster pumps along the way. These are surface-mounted on small concrete bases or pilings. Power for booster pumps is most often electricity, and it is usual practice to bury the lines in conduits unless a surface electric source is found nearby. Burying the saltwater lines and conduits follows the procedure previously described for flowlines.

If the brine is discharged directly into marine waters, the pipe is placed in an area where there is significant current to aid in dispersing the fluids. Often the brine is warm; Evers (1972) gave a typical temperature of $43^{o}C$ for water derived from freewater knockout and heater-treaters. The heat is a result of geothermal temperatures, production treatment, and the low specific heat of the brine. Heat dispersal is aided by current flow.

If a new well is drilled for saltwater disposal, many of the steps previously described for new well drilling will be required. These will include roadway preparation, all drilling operations, etc. If an old or dry well is used, the preparations are much less extensive. It may be possible to inject the brine into the same formation(s) from which petroleum was pumped. Therefore, the installation of an injector pump at the wellhead may be all that is necessary. In some cases, plugs may have to be drilled out and new or additional perforations may be required. This can often be accomplished by a portable workover rig, a self-contained drilling rig mounted on a large truck. Since this vehicle is not excessively large, no modifications of the road or pad area are required. Drilling fluids for the workover rig are usually wholly contained in steel tanks. If the well used was a dry hole originally, casing may be required to protect water-bearing strata. A larger portable rig may be required in this case because of the weight of the casing. Cementing and perforation or screen emplacement may be additional steps required to prepare a dry hole for saltwater disposal.

At some production facilities, low production levels of brine or the absence of old wells makes the disposal of brine by injection well prohibitively expensive. Consequently tank trucks are used to haul brine to other disposal facilities. If frequent hauling is necessary, roads leading to the production site, particularly at soft spots or culverts, may need reinforcement.

Start-up of production. Before the well begins actual production, pressure tests are made of the facilities, especially of connections, valves, and pipes. If the well was recently completed, it is likely that all logging, perforation, and treatment has been done. However, if the well has been recently worked over or has been capped for a long period, some of these operations may be repeated before production commences.

The well then begins production, sending gas and oil to the production equipment. The well is closely monitored during the first few weeks. Of special interest is the flow rate and various pressures generated by the petroleum-producing strata. Numerous tests are made on the well to ascertain the reservoir pressure, potential flow rate, fluid levels, and characteristics of the reservoir. These tests are important in determining how to manage single-well and field production so that the maximum amount of petroleum may be extracted from the reservoir. They are also important in defining flow maxima so that wellsite equipment will not be damaged. These tests require little more than vehicle or vessel entry to the area to allow frequent readings to be made.

At the centralized production facility, start-up of production is a process of balancing flows and treatments. The flow from wells is directed to numerous treatment facilities and must be adjusted until all systems are operating smoothly. Wells that produce gas have only dehydrators and flowmeters at the wellsite. The flowlines may run directly to natural gas gathering lines and then to gas pipelines.

Wells that produce a mixture of oil, gas, and brine require treatment. The mixture flows to the production equipment and may be initially treated with chemicals, particularly if hydrates are a problem. The mixture enters a separator or series of separators where the gas is separated. The gas is metered and then sent on to the natural gas gathering lines. Part of the crude is drawn off from the separator and sent to the stock tanks. The remainder is a mixture of oil and water that must be separated. A flow treater, freewater knockout tank, and emulsion treater may do most of this separating. The oil is sent to the stock tanks for storage; the brine is held in brine tanks for disposal.

Continuous operating procedures. Continuous operation of production facilities entails monitoring and maintaining production equipment, gauging and switching petroleum products, disposing of brine, occasional spill and leak cleanup, well workover, and termination of production. The common link among all these activities is the frequent access to the area for checking, gauge reading, etc. For producing leases located on upland sites, lease operators check the centralized production facilities every day. Wellsites that are easily reached are checked almost every day, and newly producing wells are checked more frequently. Even sites that are more difficult to reach, such as those in the dredged locations, are checked several times a week.

Wellsites and production equipment accessible by road have frequent truck traffic. In marsh areas with dredged canals, small boats are most often used. Much of the monitoring activity involves getting to the wellsite, making a quick visual check, and recording gauge or flowmeter readings. Personnel spend most of their time traveling from one location to the next. Therefore, efficient utilization of their time requires that they move from one wellsite to another as quickly and efficiently as possible. On roads made with dry fill, dust and traffic may be the only significant consequences. In dredged channels, boat traffic causes wave action and contributes to bank erosion (Ensminger, 1963).

At the wellsite, the Christmas tree requires periodic maintenance. Because sediment is often carried by the flow from the wells, pipes, valves, and chokes become worn. Chokes are periodically cleaned, and occasionally pieces of equipment are replaced. Spent equipment and cleaning residue is usually hauled away. At the central production facility, tanks, separators, settling ponds, skimmers, and chemical processors must be periodically cleaned. Sediment collects and is removed. It may be piled for later removal or cleaning. Paraffin and tar-like materials collect in tanks, separators, and pipes and must be removed. This material may be incinerated. Chemicals such as ethylene glycol for dehydrators must be replenished. Finally, petroleum fractions may be skimmed from brine for incineration.

Both wellsite and production site grounds are maintained. Since the area around the facilities is often surfaced with shell or rock, holes and soft spots are filled to maintain a smooth surface. The nearby grass is mowed occasionally for safety and appearance. It is particularly important to control trees and shrubs that might develop roots that could damage or interfere with underground equipment. Control of vegetation on a surfaced area can be a problem, and some lease operators prefer to use herbicides because of the ease of application.

Since the sites under study are in coastal locations, the potential corrosiveness of air-borne salt requires more frequent maintenance in the form of scraping, priming, and painting. Most metal parts are sandblasted to remove rust and old paint, then they are primed and painted. In some areas, surface owners specify that the color chosen should help blend the equipment into the background. If not specified, however, most equipment is painted metallic silver to reflect heat as much as possible. Sandblasting entails some sand particle dispersal in the air, and it can be noisy. However, the effects are very localized.

Gauging and switching. After the crude is separated and treated, it is stored in the stock tanks. When they are filled, the lease operator and pipeline gauger meet to measure the crude produced, and send it to the crude oil pipeline. The gauger measures the height of the tank fluid (the tank has been calibrated previously), measures the purity and density of the crude, and transports it via truck, barge, or pipe to the crude oil pipeline or terminal.

Saltwater disposal. Because of severe and long-term consequences to vegetation and soil, salt water disposal facilities require frequent checking to prevent mishaps. Salt water is usually collected in tanks or pits so that particulate matter may settle out and oil may be skimmed off. After a long period, the tank may have to be cleaned due to the collection of sediment. The sediment is often piled nearby and may be hauled away or used as fill. The skimmed oil is periodically returned to the separator system for reprocessing. When it is impractical to skim the oil from the surface, it can be burned. This is often the case on remote production sites that are only partially automated. On some production facilities, a pilot light is on constantly and when the floating oil and wax contacts the flame, it ignites and burns. The brine is withdrawn from the pit below the water surface for disposal or further treatment.

Settling does not remove all particulate matter, and therefore filters may be used. These may be in-line pressure filters or trickle filters. In-line filters have elements that must be periodically changed. Trickle filters depend upon slow percolation of water through a sequence of materials from clay to gravel. Trickle filters are periodically maintained by back-flushing and collection of the coagulated floe. On occasion the upper layers of a trickle filter must be removed and recharged. The by-products of trickle filter cleaning are removed from the equipment and disposed as solid wastes.

Water quality standards for surface or subsurface disposal may mandate chemical or physical treatment of brine. Chemicals may need replenishing since they are used up during treatment. Frequently used chemicals include chlorine, coagulants, and lime.

The actual disposal of the brine depends on the magnitude of brine production. Some wells or fields may produce very little brine. Thus, brine disposal is a small problem handled by production personnel. Other fields, however, may produce considerably more brine than crude. This is particularly true in older fields where production is declining as the resource is depleted. Consequently, the brine problem becomes a major element of production management.

Some of the steps described above may be circumvented if a closed brine system is used. For such a system to operate, the brine must be fairly clean and remain unexposed to air. This system may be used when the brine is being returned to the same formation from which it came.

Spill and leak cleanup. Spills and leaks are the result of equipment failure, improper operation of equipment, or human error. In many instances automatic devices are used to control failures in equipment. Gas flowlines often have automatic valves that shut if the pressure is above or below preselected threshold values, or they at least have pressure detectors that signal malfunctions.

If a spill or significant leak occurs, most operators have their own emergency plan for containment and removal of the oil and restoration of the area. In addition, there are numerous state and Federal requirements for reporting and cleaning the area. If the spill occurs on land, the first step is to contain the oil so it does not spread. In many production facilities, the equipment is surrounded by small levees, so many spills can be controlled. If enough oil has collected, vacuum trucks can be used to pick some of it up. If vegetation is covered by oil, it can be cut or burned in situ after the air control authorities have been notified. If all that is left is soil soaked with petroleum, it may be dug and removed from the area or buried elsewhere. New fill can then be brought to the spill site. While these activities occur, the source of the leak or spill is repaired.

If the spill occurs on water, the problem is often more complex. Since the state usually owns the waters and wildlife, many state agencies are involved in the cleanup. In addition, the U.S. Coast Guard and Environmental Protection Agency must be notified. The first step is to contain the spill and keep it from spreading. Floating oil booms or surface dams are brought in to isolate the spill. Then specialized equipment may be used to skim the oil off the surface. In some cases, hay is used to absorb the oil and is then picked up and burned. Several chemical dispersants or sinking agents are available to break up the surface oil. However, many states require special permission to use the materials, depending on the environmental circumstances. In the case of oil spills on water, state and Federal agencies often send representatives who supervise and approve the methods for cleanup.

Workover of wells. The breakdown or maintenance of equipment in wells, clogging of lines, or changes in the petroleum reservoir may necessitate work in the wellbore itself. Downhole equipment that may require maintenance includes pumps, sucker rods, and tubing. In sedimentary strata, sand may clog the screens of the tubing, perforation holes, and tubing bore. Paraffin may clog the tubing and require occasional swabbing. With changes in gas or formation pressure of petroleum-bearing strata, treatment and/or pumps of various sorts may be needed in the wellbore. Indeed, if strata play out and petroleum can no longer be economically recovered, holes may be deepened or new strata may be utilized for production. This may involve more drilling, plugging back, recementing, refracturing, and retreatment.

Well workover requires a portable rig that can pull and place equipment in the well. The size of the equipment depends on the job to be done, and it may range from very small truck-mounted rigs to rigs the size of the original drilling apparatus. Consequently, the activities at the wellsite may range in scale from being hardly more than routine maintenance to fullblown drilling operations of the same magnitude as exploratory drilling.

Termination of production. At the wellsite, terminating production involves the pulling of all tubing and downhole equipment; therefore, a small rig will be required. Used equipment is often sold as scrap and trucked away

from the site. Precautions must be taken during this operation to control waste liquids associated with equipment removal. If the well is to be permanently shut down, the bore must be filled with mud and capped with cement. Then the casing must be cut below ground and the area around the wellhead filled and tamped. Surface production equipment such as the Christmas tree, walking beam, and pumps may be in good enough condition to be refurbished and moved elsewhere. Surface flowlines are disconnected, and if they are in good condition, they can be used elsewhere. However, it is unusual to remove buried lines unless they are very near the surface.

When operations are completely terminated, the surface owner may require a certain amount of restoration of the area around the wellsite. The operator may level the area, plow, and seed it according to the owner's specifications. In upland areas, the wellsite location often has become revegetated over the period of time from drilling to shutdown. Therefore, the restoration required in these places is minimal.

In marsh locations, owners may ask for breaching or removal of dikes, though this is unusual. Because of previous artificial or natural revegetation, dikes are usually well-vegetated by the time shutdown of a producing wellsite occurs.

In dredged locations, a small floating rig is required to pull the tubing and equipment from the wellbore. A minor amount of dredging may be required to move this rig to the location site. All downhole equipment, surface production equipment, and surface flowlines are removed and barged elsewhere. Unless in excellent shape, most of this equipment is sold for scrap. The well is filled with mud and capped, and the casing is cut considerably below the water-sediment interface. When all equipment is removed, the canal leading to the slip may be closed off, though in the majority of cases it is not. In dredged locations, surface pumps, heaters, and wellsite production equipment are placed on pilings. When shutdown occurs, these pilings are removed so that no obstructions remain.

In upland, marsh, and dredged sites, roads or levees with roads that have been built are usually left after termination of production. Since production is long term, the impacts (if any) resulting from significant physical changes have already occurred. Sometimes surface owners have found the roads to be convenient for their own access. Thus, it is unusual for the surface owner to require removal and restoration of road areas.

When a field has completely ceased production, centralized upland production facilities are removed as well. All pieces of surface equipment - tanks, separators, valves, etc. - are removed from their permanent foundations. Unless in very good condition, this equipment is sold for scrap on site. Surface flowlines are taken up, though buried pipes are usually left. Unless specifically required by the surface owner, poured foundations are usually not removed.

Any accumulated scrap or residues from production are removed or burnt on site (subject to air control regulations). Materials such as sediment removed from settling tanks or separators may be buried or used at the site. The lining of brine collection pits or burning pits is removed, and the pits are filled in. A small amount of leveling, grading, and revegetation may be involved.

Production facilities mounted on barges or pilings are completely removed. Pilings themselves are removed or cut so that they pose no navigation hazards.

Petroleum Transportation

Petroleum is transported by barge, ship, truck, and pipeline. The first three methods may involve construction, dredging, and vehicle movement; however, the activities of barge, ship, and truck movement are not totally involved with petroleum. The port facilities, barge loading terminals, and roads involved in petroleum movement are usually owned by the state or petroleum companies. They are not often owned by a surface owner, whose interest is in agriculture or wildlife management.

Pipelines, on the other hand, are very likely to cross privately held lands; therefore, this section will deal with the construction and operation of gas, crude, and products pipelines.

Pipeline routes are carefully planned as a compromise between route length, difficulty of excavation, obstructions encountered, and environmental considerations. Increases in any of these categories can involve significant cost increases for the pipeline.

In the gulf coast area, pipelines are laid year round. The pipeline contractors map the pipeline "as-built" so that accurate information is available for future monitoring or maintenance. However they do not routinely supply such maps to land managers without a specific request. Rights-of-way are acquired from surface owners for the pipeline. Sometimes a wide right-of-way is acquired for construction, and a narrower easement is bought for operation and management. In Louisiana a 30-m (100-ft) easement is the historical standard, though sometimes 10-m (30-ft) widths are acquired (Conner et al., 1976).

After easements have been obtained, pipeline construction begins with surveying the route. Then the route is cleared for as much as 30 m (98 ft) on either side of the actual line the pipe will follow. This allows room for vehicle and equipment movement and provides a permanent corridor than can be visually checked from the air during operation. Supplies and equipment are brought to the site, and the construction begins.

Pipeline construction is a sequential operation involving several distinct activities occurring in a particular order. Because the sequence of operations occurs at all points along the pipeline in a particular order, the equipment and activities are stretched out over several km, and the sequence (called a "spread") moves along the entire pipeline from beginning to end. It is not unusual for a spread to move 3.2 km (2 mi) per day and on a large pipeline, 250 to 500 workers may be involved (Petroleum Extension Service, 1972).

After the area is cleared, a road may be graded adjacent to the route. Ditchers and backhoes dig the pipeline ditch, and trucks bring in the pipe. It is bent if necessary, and sections are welded end to end. A machine cleans, coats, and wraps the pipe surface and then the pipe is placed into the earth. The excavated material is backfilled into the ditch, the earth is tamped and leveled, and revegetation and restoration proceed.

In marsh or open waters, many complications arise because of the lack of firm substrate for vehicle movement. In open-water areas, all pipe construction and protection activities take place in sequence on a lay barge, with the pipe being lowered to the bottom after the barge passes by. In marshes, sometimes wide sections of marsh are dredged to allow passage of a pipeline barge. A method known as the "push-method" uses a stationary pipeline barge with the free end of the pipe pushed through a narrow canal dug by equipment mounted on marsh buggies.

Pipeline construction - uplands. A survey crew enters and stakes the pipeline location and the units of the pipeline right-of-way. Some vegetation may be cleared. The crew may survey a continuous line or series of segments. Equipment such as dozers, draglines, backhoes, and augers enter the area, and a clearing crew begins to cut a pathway along the route. Since pipeline construction is an activity traversing a considerable distance, many routes of access are required for moving men and equipment to the construction site. While pipeline contractors use existing routes as much as possible, it is often necessary to create new access roads or trails to reach some parts of the operation.

The crew cuts or clears all standing vegetation across the width of the route. The brush is stacked, and the usual method of disposal is burning. The right-of-way is then leveled, graded, or filled until it is suitable as a roadway for heavy digging and pipe-laying apparatus. In spots where the surface is soft, fill, shell, or gravel may be brought in by truck and compacted on the surface. There may be temporary board crossings in some spots. The object of the clearing and pathway preparation is to allow easy passage of the equipment. Therefore, drainage paths may be partially blocked for a short time. After the spread has passed the area, the surface is restored to its original contour and often is seeded.

As the clearing crew proceeds, many fences are crossed. The clearing crew will erect temporary fencing and reroute fences where needed. They may also clear and grade temporary roads to the pipeline route for easier access by supply vehicles and personnel.

In most upland areas, a large rotary ditcher is used to dig the trench. The ditcher moves along on tracks and digs a continuous hole, the depth of which depends on the size pipe to be laid. The depth is selected so that the top of the pipe will be about one meter below the surface of the land. Federal regulations (49 CFR 192.327; 49 CFR 192.248) prescribe minimum depths for all natural gas pipelines and liquid petroleum pipelines used in interstate commerce. In rural areas, a minimum of 0.75 m (30 inches) is required between the pipeline top and ground level. In urban areas, the minimum is 0.92 m (3 ft), and in deepwater port safety zones and inland water bodies greater than 30 m (100 ft) wide, the minimum depth for liquid pipelines is 1.2 m (4 ft). Pipeline contractors generally follow these guidelines even for intrastate liquids pipelines since they may be used in future interstate commerce. The spoil from the hole is stacked in a continuous row on one side of the ditch. The other side remains clear so equipment can move right up to the hole.

Rocks, stumps, and other pipelines are encountered in the ditching process. Obstructions may be blasted if they are large, and the rubble is removed by dragline or backhoe. Usually, where pipelines cross, the new pipeline will be placed under the existing one. Roads, highways, and railroads are crossed at many points. The road may actually be cut by the ditcher and a temporary road crossing made from heavy beams and steel plates. For major highways and railroads, a road-boring machine may be used to drill a hole under the road. The hole is then lined with conduit through which the pipeline will pass.

Rainwater and high levels of groundwater often result in water collecting in the hole. Pumps are used to remove the water and place it on the upland area adjacent to the work site.

Trucks enter the right-of-way carrying pipe. There may be access roads every few miles, so supply trucks do not have to drive the entire distance on the right-of-way road. The pipe is set off to the side by side-boom tractors. When bends are needed in pipe, special track-mounted machines are used.

The joints for pipelines that carry high pressures are welded. The end of the pipe is cleaned and squared by grinding and cutting if necessary. The pipe is lifted by side boom, aligned, clamped, and welded by hand or by automatic welding equipment. The initial bead holds the pipe aligned and allows the clamps to be removed and the next section to be prepared. Then other teams of welders with varying types of equipment may add one to four more beads, depending on pipe thickness.

After each weld is completed, it is inspected. Photographic film is placed on the outside of the weld and a radioactive source is placed in the pipe to expose the film. The images on the developed film reveal any faults in the welds. They can be repaired immediately.

When all welds have been checked, the pipe is cleaned of all dirt, rust, and foreign material. Often a special machine travels down the pipe with rotating brushes and scrapers. Machines such as this may be self-propelled or pulled by side-boom tractors. The pipe itself is lifted from its temporary blocks for passage of the machinery. Several pipe-mounted machines may pass any point, priming the pipe, coating it with asphalt or tar, and wrapping it with fiberglass and heavy paper. Vehicles accompanying the passage of each pipe-treating machine include at least two side-boom tractors, hot-tar vehicles, and supply vehicles.

Faults in the coating and wrapping process are detected by visual inspection and electronic detectors, and they are repaired by hand. Some pipe is coated with cement before arriving at the field. Special molds are used to create complete patches around the welded joint areas.

The pipe is lowered into the hole. Sometimes weights or fasteners are required to anchor the pipe in the hole so it does not float out. The pipe is lowered by a series of side-boom tractors traveling along the route. They lift the pipe and ease it into the hole in one continuous action as they travel down the route. Pipe may be placed in difficult spots at this time, such as under roads or under other pipelines.

Just prior to the lowering and placement of pipe, excavation will take place for the placement of block valves, bypass valves, and condensation traps. The valves may be part of the automatic shut-off system of the pipeline. A backhoe will dig an area on either side of the pipeline. Special valves are trucked to the site and lowered into the widened area. The pipeline and valves are joined and welded.

Electrolytic devices are used to protect the pipe from electrolysis with the soil. In moderately dry soils, sacrificial anodes such as pieces of zinc are fastened to the pipe. The zinc is more easily oxidized than the iron in the pipe, therefore protecting the pipe from electrolysis (by the natural potential between materials). Cathodic protection involves the placing of a potential between the pipe and a pile of scrap iron to counteract the natural electrochemical potential in the soil. The scrap serves as an anode, and the pipeline is a cathode when connected to a low-voltage negative potential.

Scrap piles are buried every 1.6 to 8 km (1 to 5 mi) (Davis and Cyrus, 1947), depending on the conductivity of the soil. Electrical connections to the scrap and pipelines are made at these intervals. Power poles or buried

electric lines and rectifier stations are necessary. Consequently, the activities associated with placing electric lines may be required.

Pipeline construction - moderately firm marsh soils. All of the actual construction activities on the pipe itself - joining, welding, inspection, cleaning, and wrapping - can be accomplished on a barge that is either stationary or moves along as each new section is added. Consequently, if a straight line of pipe is to be laid in marsh soils where the ground is too soft to hold heavy equipment, but where a ditch may be dug that will fill with water, the pipe may be pushed from the barge and floated down the ditch for several miles. Then it can be released from the floats and covered. Completely assembled sections up to 76 cm (30 inches) in diameter and 24 km (15 mi) in length can be laid by the push method (McGinnis et al., 1972).

After the route has been planned and the right-of-way is obtained, surveyors stake the route. They may travel by truck, marsh buggy, air boat, or helicopter to reach all points along the survey line. It is very important that the route to be pushed is straight, so the survey crew stakes the outside limits of the canal to be dredged.

A dragline, mounted on tracks (with timber mats) or placed on a marsh buggy, is used to dig the pipeline ditch. The dredge usually moves away from the site where the push barge is located. The spoil from the excavation is placed on both sides of the ditch. In some ditch excavations, the dredge operators have separated the marsh vegetation and upper soil from that dug in deeper portions of the ditch. Thus, after the pipeline is in position, the area can be refilled with the upper soil and remaining vegetation being replaced last (True et al., 1977).

The pipeline canal is dug 1.2 to 1.8 m (4 to 6 ft) deep and 2.6 to 3.1 m (8 to 10 ft) wide (Conner et al., 1976). When the dragline digs the canal, it usually traverses the center of the area to be dug. This can lessen the impact of compacting soil and vegetation that usually accompanies vehicle movement in marshes. The dragline can be reached by small boat through the canal. If the route to be dredged is long, care must be taken not to leave trash and waste materials along the route.

The area affected by ditching is about 9.1 m (30 ft) wide for small lines (True et al., 1977) and wider for larger pipes. The depth of the ditch depends on the size of pipe being laid; however, it is usual that 0.76 to 1.2 m (2.5 to 4 ft) remain between the top of the pipe and the soil level as prescribed by Federal regulation. Marsh soil contains a large amount of water and organic matter, and if piled up, may shrink and compact the soil below. Therefore, if the spoil is to be used to backfill the trench, it must not remain out of the water for more than a few days. Even if backfilling is done, the spoil will not completely fill the flotation canal, although Willingham et al. (1975) showed that backfilling promoted reestablishment of original conditions.

On occasion, the canal is not backfilled at all. This leaves a small spoil levee alongside the canal. Whether the levee remains or not, there should be periodic circulation breaks in the spoil bank so that the drainage patterns of the marsh are not entirely destroyed.

The pushing may be done from a land location, or more frequently from a pipeline barge that is located in a slip at the head of the push canal. A channel and slip must be dredged for access of the push-barge. Methods for dredging and orienting this barge are the same as those used in dredging wellsite slips and canals.

The sequence of activities to join the pipe sections together is the same as previously described, only taking place on the barge. As each new section is completed, sets of floats, often 55-gallon drums or large pieces of styrofoam, are attached to the pipe and it is pushed into the canal. It is not unusual to have a marsh buggy travel along with the head of the pipe to steer it and keep it clear of the banks.

When the pipe is completely strung out, floats are removed in sequence and the pipe sinks into the ditch. The floats are retrieved and rafted back to the push-barge or to the new push location. Depending upon the size of the pipe being laid, there may be more than 600 floats per km (1,000 floats per mi) to be retrieved.

Sometimes a long push pipeline is made by pushing the pipe from the barge in one direction, and then turning the barge around and pushing the pipe in the opposite direction (Petroleum Extension Service, 1972). The same sequence of operations is followed, but this requires less dredging of push-barge slips and canals.

Backfilling is the preferred method of completing the laying operation because the spoil levee is eliminated, pipe is protected by soil, and the possibility of marsh recovery is maximized. A dragline progresses along the canal, filling it with the spoil. If the surface material was separated from the deeper earth, it will be replaced on top.

In some places, the canal may cross natural or man-made watercourses that have water flowing through them. Here it is desirable to place a bulkhead or wier across the pipeline canal to block water flow, protect the bank from erosion, prevent marsh drainage or saltwater intrusion, and prohibit boat traffic. This is particularly true where the normal water level is below that of the marsh surface. Where backfilling is not used, pipeline canal plugs or wiers are sometimes used. A wier has an advantage over an earthen plug in that it will allow easy passage of water above prescribed levels and may be adjustable for height. Thus, water levels in the marsh can be controlled. Low wiers are often used where there is occasional tidal influence so that

high water may pass over the top, but drainage of water off the marsh will cease when the water reaches a prescribed level. In the past, unreinforced bank plugs have been formed merely of compacted marsh soil. Due to subsidence, water and animal movement, and the lack of stabilizing vegetation, this sort of plug has often failed. Simple reinforcement methods such as pilings, metal sheets, or concrete-capped shell provide better plug security, but they are not used universally.

Thus, it is desirable to build permanent canal plugs or wiers. When a site is chosen, a dragline is used to place a number of small pilings into the soil. The pilings are placed across the ditch, and there may be several rows of them in places. Heavy boards, corrugated iron, or even concrete slabs may be fastened to the outside rows of piles to form two parallel walls. The outside piles may be braced, and then the interior section between the walls is filled with spoil. If cattle are to use the plug as a walkway, it is elevated slightly and covered with shell to give it a hard surface. Otherwise, fill or, in some cases, a concrete cap, is placed across the top of the plug. If a wier is being constructed, ironwork may be placed so that movable slats can be used to control the water level. While these improved bulkheads, plugs, and wiers are desirable, they are not industry standards, and there have been many instances where not even earthen plugs were installed.

In moderately firm marsh soils, cathodic protection is sometimes used. However, when the soils become too moist or when the pipe is actually laid in water, protection of pipe is more dependent upon complete sealing to exclude water and to insulate the pipe. Here layers of mastic - asphalt derivatives - and concrete are used to seal the pipe.

Pipeline construction - unstable marsh soils and shallow water bodies. In some areas, the marsh soil is so unstable that it cannot support the weight of a dredge. In other instances, requirements of the pipeline do not allow the push method to be used. Instead, the "flotation" technique is used. The flotation technique utilizes a canal wide enough for the pipeline barge and other vessels to float through. The pipe is laid from a pipeline barge that traverses the length of the canal.

Hydraulic or bucket dredges are used to excavate the flotation canal. The methods used are the same as those used for dredging wellsite canals and slips. Typically, the canal is 12 to 15 m (40 to 50 ft) wide and 1.8 to 2.4 m (6 to 8 ft) deep for vessel passage. A narrow deeper ditch is dredged within the wide canal for actual pipeline placement. Spoil is placed alongside the canal or pumped away from the side. On occasion, other pipelines may cross the canal. Hydraulic dredges are usually used to clear a path under these pipes (Petroleum Extension Service, 1972).

It is rare that dredged material is backfilled into a flotation canal, though Willingham et al. (1975) reported the backfilling of a 1.2-km (2-mi)

stretch crossing a wildlife refuge. Gaps may be left between the spoil banks for marsh circulation. However, even discontinuous spoil piles can cause severe disruption of waterflow patterns unless carefully planned. In an impact assessment statement concerning canal dredging in the Delta Refuge, the USFWS recommended a final conformation of spoil to be low circular islands (30 to 60 m in diameter) separated by 10 to 20 m of water. The material dredged is very fluid and tends to spread out, compacting the marsh soil below. McGinnis et al. (1972) reported that the spoil banks from this operation are typically 0.9 to 1.5 m (3 to 5 ft) high and 15 to 24 m (50 to 85 ft) wide with a 9.1 to 15-m (30 to 50-ft) berm.

The barge travels the length of the canal, laying the pipe. The operations involved with pipe connection are the same as those described before except that no flotation devices are applied; the pipe is laid directly off the barge.

Many land owners require plugging the wide canal. Significant erosion problems from boat traffic and water movement can occur if the canal is left unplugged. Saltwater intrusion or major alterations in marsh drainage patterns result from unplugged pipeline canals. The methods for plugging are essentially the same as described before. When a wide flotation canal intersects a navigation canal or open-water areas, even greater strengthening of the plug is required. Often concrete riprap or slabs are used to control erosion. On major navigation channels, small wave diversion islands are sometimes placed in front of the plug to help dissipate wave energy from passing vessels.

In open waters, the pipeline laying technique is very similar to the flotation method. In shallow areas, the bottom may be dredged for passage of the barge and for pipe placement. When the water is deep enough for barge passage, a jetting technique is sometimes used to bury the pipe, using a lay barge and a jet barge. The pipe sections are assembled and laid directly on the bottom by the lay barge. Then a jet barge follows the submerged pipe and pumps high-velocity water immediately around and under the pipe, and the pipe settles into the resulting trench; the suspended sediment falls back to the bottom, partially settling in the trench. Burial by jetting may disturb an area 9 m (30 ft) wide (True et al., 1977), but there are no long piles of spoil. Suspended sediments may contribute to increased water turbidity of the surrounding area. The extent is dependent on water velocity, particle size, and bottom morphology. Hellier and Kornicker (1962) found fine sediment deposition between 0.8 and 1.6 km (0.5 and 1 mi) downstream from a dredging operation.

River and stream crossings. Over small streams that are nonnavigable, the pipe may be bent up so that it emerges from the ground along the stream bank. The pipe itself may cross the stream above the water level. Usually the crossing is braced so that supports can take the strains of floods or collisions.

Elevated pipes are sometimes used to cross wide rivers if the bottom is particularly difficult to excavate or if the pipe can be easily elevated high enough above navigable water.

Most river or channel crossings are submerged, and the methods for crossing often depend on the circumstance. When navigable waters are crossed, the pipe-laying company cannot obstruct traffic for long. Therefore, a trench is excavated across the bottom by dragline. The pipe is prepared immediately adjacent to the area. Usually a long enough string of sections is made so that the pipe span necessary to cross the river may be laid at one time. The pipe is floated into position, and the floats are removed. The pipe is guided into the ditch across the entire river in one operation. Then coarse filler, gravel, and rocks, are used to backfill the trench. A variation of this is to lay the entire span across the river, on the bottom. Then a jet barge is used to bury the pipe.

For streams that are not navigable, a diversion dam may be built so that the pipeline may be assembled section by section and placed across the river. As the laying progresses, the dam is moved at the front of the pathway and taken up at the rear.

Regardless of which method is used, reinforcement is always required where the pipeline crosses the river bank; concrete bulkheading may be placed where cuts were made in the bank.

Pump station construction. Intermediate stations along pipelines are required for pumps, compressors, and traps for scrapers, pigs, and balls. These stations may be 64 to 80 km (40 to 50 mi) apart, depending on the terrain and materials transported. Usually these pump stations contain scraper traps and launchers for cleaning and scraping the insides of the pipeline.

A permanent road is built to the site of the pump station. Since the station is built at the time of pipeline construction on the pipeline route, the road will probably carry some of the supplies for the pipeline construction as well. Methods for road construction are the same as those for roads to wellsites.

Usually the areas have parts of the pipes and most of the equipment exposed above a foundation. Often a large foundation area is dug that will contain the entire pump station. The area is comparable to the wellsite location size. Valves, traps, launchers, some treatment equipment, pumps or compressors, and monitoring devices are usually mounted on poured concrete foundations. After all equipment is placed, the shallow foundation is filled with shell or gravel.

Pumps and monitoring equipment are usually housed in a covered area away from the effects of weather. This allows these vital pieces of equipment to be overhauled at any time without regard to outside conditions. Pumps and compressors are usually connected in pairs for each pipeline. Both members of a pair will be operated at the same time, unless one is undergoing an overhaul. One pump or compressor is capable of doing the required work; however, if two are placed on line, the pipeline can continue to run when one piece of equipment is out of service. There is often a third, back-up, pump or compressor that can be placed into service if both primary pumps fail. Diversion valves and pipes are built into the site for the back-up pump (Davis and Cyrus, 1947).

The pumps, compressors, and other equipment are partially powered by electricity; therefore, electric lines are nearly always present. Power for compressors and pumps may be electric, though they are more often fueled by natural gas or diesel fuel. Consequently, gas lines or fuel tanks may have to be placed at the site.

Pump stations may simply be boosters along the pipeline; they may be points of collection for several sources of natural gas or oil; or they may be points of division and dispersal of petroleum to several customers. Consequently, communications systems are very important to pipeline operations. Telephone communications are standard to nearly every pump station. In addition, radio and microwave systems are often used to communicate, operate equipment remotely, and monitor equipment. Tall microwave towers are often found at pump stations to relay communications signals along the pipeline route.

Pump stations are occasionally placed in marsh areas or on platforms above water. The same equipment is found at these stations, and the construction methods will be similar to those used to build marsh and platform production sites.

Testing pipelines. Pipelines and the intermediate pump stations are tested before a pipeline company accepts them for operation. Testing procedure is determined by the pipeline company and is usually done in sections (Petroleum Extension Service, 1972). This is because testing is often done hydrostatically, and the volume of water required to test a long pipeline all at one time might be prohibitively expensive. In addition, testing of shorter sections allows quicker isolation and identification of leaks (detected by pressure drops).

The inside of the pipe is cleaned by scraper passage, and a fluid or gas is introduced into the pipe. Then the pipe is pressurized. There is a regimen of pressures that must be maintained for selected time periods to test the pipeline. Usually the pressures are considerably higher than the operation pressure will be. The entire testing sequence may take several days and

usually includes at least one long time period at a higher-than-normal pressure.

If leaks are evident (noted by unusual pressure drops), they must be located and repaired. Pressure gauges along the route can isolate relatively short sections that may contain the leaks. If water is the fluid used, wet spots in the soil may give clues to the leak area. If air or gas is used for testing, sensitive microphones or "gas sniffers" can be used by crewmen walking the pipeline route to detect the leak. When the location of the leak has been determined, a crew must move in to make repairs. Equipment will include dragline or backhoe, side-boom tractor, materials for patching the wrapping, and an x-ray crew. The excavation equipment digs out the earth around the pipe. The coating is removed and visually inspected. Sometimes an x-ray of the weld is required to check the length of the welding fault. The joint is rewelded, and a new x-ray is taken. Then the spot is recleaned, primed, coated, and wrapped. The excavation is refilled, and the equipment is removed.

Pipeline operation. Pipeline operation is long term, measured in decades. The activities associated with pipeline operation may be divided into operations at the pump station and along the pipeline route.

Pump stations that are not simply booster facilities along the route are manned at least part of the day, and sometimes continuously. Booster stations are visited nearly every day. Thus, there is normal traffic back and forth with shift changes on a regular basis. Most of the activities involve monitoring equipment; switching and diverting flows in the pipelines; maintenance of the pumps and compressors; maintenance of outside equipment, including scraping and painting; cleaning minor drips and leaks from valves; and maintaining the grounds. The inside of the pipe is cleaned by scraping the line periodically to remove paraffin and scale. Sometimes large spheres are used to separate fluids being pumped in the line. The removal of the spheres and scrapers can result in small amounts of petroleum materials being exposed outside the pipe. However, the amount is small and pump stations have sumps and drains built into the launchers, traps, and areas where they are used to confine any materials that might leak. Paraffin is a hard waxy material and is handled as a solid waste.

Pipeline activities. Pipelines are monitored constantly for sudden pressure drops indicating leaks. Pipeline companies also make visual inspections of pipelines from low-flying aircraft as often as several times a week. Observers look for wet spots or signs of oil and gas bubbles, particularly in marshy areas. Some inspection aircraft have "gas sniffers" to detect gas leaks from the air.

On-ground maintenance operations involve the many block valves and bypass valves located along a pipeline route. These are periodically checked to ensure their operation in case of leaks. Surface facilities at these valve

sites are maintained to control corrosion. Grounds are maintained by mowing or herbicides. Pipeline rights-of-way are maintained so that shrubs and woody vegetation with roots that might damage underground equipment are controlled. Also, keeping the right-of-way cleared allows efficient monitoring of the pipeline by aerial inspection.

Cathode stations are checked periodically. After a few years' use, new anodes or additional scrap material may be required to ensure protection from electrolysis.

Major leaks in pipelines trigger the block valves and stop flow in the pipeline. Thus, only a small portion of the material in the pipe can leak out. Smaller leaks may be detected as noted above. When a leak is detected, immediate steps are taken to repair the faulty area. The steps are similar to those taken when leaks are discovered during testing. However, special precautions are required to guard against explosion or fire during the repair phase.

OIL AND GAS ACTIVITIES ON WILDLIFE REFUGES

The following is an overview of the history, intensity, and scope of oil and gas activities on the Aransas, Brazoria, Delta, Sabine, and San Bernard NWR.

Aransas National Wildlife Refuge

The Aransas NWR was purchased in 1937. Previous to the acquisition by the U.S. Department of Agriculture, most of the minerals had been leased to the Continental Oil Company. The first well was drilled in 1940, and well number 64 was completed during the spring of 1977. Because of the reservation of minerals at the time of purchase, the managing agencies have not required permits for activities specifically excluded from their control by the sale agreement and legal precedent. Management of oil and gas activities has been through cooperation and communication between the refuge and the company. In most instances, the company has refrained from major activities during the periods when whooping cranes have been on the refuge.

Preexploration. The refuge has undergone a significant amount of seismic activity. Most of the activity has been in the upland area, though there have been shot lines in the peripheral marsh and in the bays nearby. On the uplands, several different seismic methods have been used. Explosive methods have been common, though vibroesis and truck-mounted thumpers have been used recently. Since much of the refuge is live-oak brush, some clearing has been necessary. Continental has been the main exploration company on the refuge. Consequently, seismic work has been essentially limited to that required by the company.

Restrictions placed on seismic activities have been few. Activities have been restricted during periods of migratory waterfowl presence, and crews have been asked to create a minimum of surface disturbance.

Access to the site. Nearly all the wells drilled have been in the uplands. Texas Railroad Commission maps show only four wells on the refuge that were drilled upon dredge spoil or marshland. Essentially, all wells have been accessed by road. Roads were constructed by Continental, using the usual methods for uplands. Since there were many wells, the road system spread considerably over the entire refuge, running its length. Three major roadways have been built along the east and west costs and along the median of Blackjack Peninsula. These roads connect to form a series of loops, with small side roads leading to wellsites. The roads are graded, crowned, topped with shell, and have drainage ditches on either side. There are numerous culverts crossing small drainage courses, though in some places, particularly after heavy rains, it appears that the elevated nature of the road may block some water drainage.

Continental Oil and the refuge management agreed in 1970 to limit visitor access to much of the refuge. For Continental, this eliminated the hazard and liability resulting from vandalism or accidents to refuge visitors. For the benefit of the refuge, Continental agreed to cease using public access roads that were undergoing wear due to heavy vehicles. In addition, Continental agreed to maintain about 130 km (80 mi) of the 160 km (100 mi) of roads on the refuge.

Access routes to wellsites are made by mutual agreement. Generally, the refuge manager meets with the company representative after receiving a map showing the tentative location and access route. If modifications are necessary, an on-site inspection is made to modify the route.

Site preparation and operation. The manager and company representative meet if, in the opinion of the manager, site modifications are required. No formal guidelines are written down, though the site planners generally avoid oak mottes and groves of large trees. The environment of the refuge is such that there are many scattered wooded areas. As a result, only slight modifications to drilling sites or access routes are needed. Equipment is usually placed in coastal grasslands or live-oak brush areas, which recover rapidly from disturbance.

The wellsite constructed is typical of any off-refuge operation. The area may encompass 0.4 to 1.6 ha (1 to 4 acres) and contains areas for storage, all normal facilities, and earthen mud, circulating, and reserve pits. Equipment for preparation of the area - dozers, graders, trucks with shell or crushed gravel - are identical to those used for off-refuge sites. Water may be supplied by a shallow well, though gas for power plant operation is usually obtained by temporary surface gas lines from nearby gas wells.

The operation of the site during drilling appears to be identical to off-refuge operations. Crew shifts, supplies, and drilling schedules are unchanged.

Placement and operation of production facilities. The Aransas Refuge has wells yielding gas, oil, and a combination of both. Since the refuge is located on a peninsula separated from the mainland by St. Charles Bay, it is impractical to route all flowlines to an off-refuge production site. In addition, there is significant oil and gas activity nearby in St. Charles Bay, San Antonio Bay, Aransas Bay, and Mesquite Bay. The USFWS decided several years ago that there was an increased threat of accident and spill if production facilities for these wells were located in the bays. Though they were concerned about the potential danger involving all forms of estuarine life, the emphasis was on the whooping crane. Consequently, they allowed several wells to be tied into new or existing production equipment in upland refuge areas. Control and maintenance was better in these areas, and the production facilities were removed from more sensitive environments.

At one time, a company other than Continental had considerable production equipment on the refuge, but it has abandoned its operations. Continental has several locations with production facilities, the largest of these at the old Continental headquarters. Equipment at that site includes four storage tanks in a battery; separators; heater-treaters; dehydrators; emulsion treaters; brine-holding facilities; pumps; and natural gas compressors. The site covers about 1 ha (2.5 acres). The equipment was placed in the usual fashion for upland areas. There is a concrete sill surrounding the tank battery and most of the production site to contain minor fluid spills. The site is well cared for and maintained.

A second production site is located centrally near a series of more recently completed wells. It contains separators, treatment equipment, compressors, and distribution lines; it was built in a fashion typical of production sites on upland areas. Many of the wells on the refuge have flow treatment devices located near the wellhead. These devices are used to control formation of hydrates in the lines or to separate petroleum products.

At one time, produced water was disposed of by pumping it into the adjacent bays. This operation has ceased, and now several old wells are used for brine disposal. The produced water is polished and pumped from the production site for injection.

The Aransas Refuge has had a long history of oil and gas activity. Now, however, the majority of operations are associated with producing rather than exploring. A few new wells may be drilled each year, though years may pass without exploration. In 1972, Continental automated most of its activities on the refuge and connected equipment to a central computer and telemetry facility for continuous monitoring of production. This has the advantage that the entire field is monitored every five minutes and production facility failure can be detected quickly.

There is daily activity on the refuge concerned with oil and gas. The company maintains the wellsites and equipment, and there are frequent visual checks of the sites and equipment in addition to the computer monitoring.

Installation of lines. All flowlines, other than temporary ones associated with drilling, are buried on the refuge. Brine-disposal lines are also buried. There are at least three major natural gas pipelines that cross the Aransas Refuge, and lines for oil transport lead off the refuge. Several flowlines lead onshore from wells in the bay, and there is a pending application for an additional pipeline leading onshore from Mesquite Bay.

Permits have been issued by the USFWS for pipeline construction. The stipulations from the permits have typically dealt with maintaining drainage, clearing and maintaining the right-of-way, and restoring the original contours of the land.

The pipeline companies maintain the rights-of-way at least yearly by mowing. They also fly a light plane along the pipeline route approximately once a week to check for leaks and hazards.

Spills and cleanup. There have been some spills on the Aransas Refuge in the last few years. The Gulf Intracoastal Waterway parallels the refuge for approximately 20 km (12.4 mi). Traffic along the waterway is heavy and there have been a few instances of leaks or spills from barges transporting petroleum products. Personnel have been mobilized from the refuge, U.S. Coast Guard, the Texas Department of Water Resources, and the Corpus Christi Area Oil Spill Control Association to clean spills. The refuge has not had specialized equipment to deal with these accidents, and often accessibility to the site of the spills has made cleanup difficult.

Spills have also taken place on the refuge proper. In one instance in 1969, a valve jammed on a separator, spewing oil over an area of nearly 16 ha (40 acres). Included within this area was a pond occasionally used by waterfowl. The area was cleaned by draining the pond into a ditch and skimming off the oil by vacuum truck. Fire lanes were cut around the site and oil-soaked vegetation was burned.

Minor leaks and spills are often associated with pumping and production equipment. The care with which companies maintain sites and equipment varies over the entire spectrum. It is safe to say, however, that the sites on the Aransas Refuge are among the cleanest and best cared for in the industry.

Site shutdown and restoration. After a well was drilled and contractors removed the equipment, Continental took pains to restore the site. Mud pits were leveled and mud and tailings were buried. If the well has been capped to await production or is put into production, the area is maintained by occasional

mowing. Often the mowed region will be smaller than the original site. If the well is dry, it has been the recent practice to remove almost all traces of presence. In some cases, even the shell forming the pad and road has been removed and taken to another site, though this is probably due to the present high price of shell. No record was found in refuge files of any reseeding of an area after equipment removal. However, because of the pioneering nature of the grass and brush species, the cleared areas are overgrown with grasses within one or two yr.

Production equipment has been placed and removed in numerous areas, and several major pipelines and many flowlines have been placed into the ground. Because of the vigorous growth of plants common to the area and the lack of fire and grazing pressure since 1973, revegetation is rapid. The major remnant of past oil and gas activities is the road system within the refuge.

Brazoria National Wildlife Refuge

The Brazoria NWR was purchased in 1966. Previous to the acquisition, numerous wells had been registered with the Texas Railroad Commission. From current Commission maps, at least 15 wells were drilled on refuge tracts, though only 3 seem to have been drilled since the area became a refuge. Some of the older wells were drilled as early as 1952, and apparently all have been accessed through dredging and floating rigs.

Preexploration. Preexploration activities have included explosive surveys crossing several portions of the refuge. They have been confined to areas of brackish marsh and coastal ponds and lakes. Typical shot lines were 2.9 km (1.8 mi) in length, and alignment was often in a cross pattern. Holes were drilled so that there were 5.5 to 10 holes per km (9 to 16 per mi). There was also a vibroesis survey on the refuge with one line 1 km (3,300 ft) long.

Marsh damage from marsh buggy movement was noted in 1972. Apparently one buggy became stuck, and a considerable area was damaged by the efforts of a second buggy to retrieve the first. According to refuge personnel, evidence of the damage is still apparent; vegetation has changed because of the increased intrusion by brackish water via the depressions that are still present on the land surface. Some permits for seismic work were issued for work in winter (February). More severe damage was noted at this time, possibly because of the wet nature of the marsh soils.

Access to site. All wellsites were accessed by dredged canals. Most were reached from the Intracoastal Waterway or from navigable channels nearby. Spoil was placed in Corps of Engineers spoil sites for more recent wells, or piled next to the channel at older sites. Several wells were drilled near deeper channels and therefore required only a minimum of access preparation. One well, however, had been placed deep within a marsh and had required a

channel of more than 1.6 km (1 mi). Two wells recently drilled required a channel 1,363 m (4,472 ft) long, 18 m (60 ft) wide, and 2.5 m (8 ft) deep to reach the wellsite.

Site preparation and operation. All wellsites have been marine locations with spoil placed nearby. Since the refuge was established, all spoil has been placed in adjacent Corps of Engineers spoil sites. Dredged locations have typically been 94 by 67 m (310 by 220 ft), with a depth of 2.5 m (8 ft). In the case of one well drilled by Houston Oil and Minerals, the company requested the presence of the manager to decide upon the alignment and final site placement. His suggestions for placement were considered by the company geologists when the final siting decision was made. Two Gulf Oil Company wells were to be located very close to one another. Through negotiation, USFWS officials convinced Gulf to slightly reposition one of the wells, thus saving dredging by 60 percent and sparing important marsh areas.

The drilling rigs were operated in the usual fashion for marine locations. Mud tanks and barges were used, and no significant problems were encountered in use of these rigs.

Placement and operation of production equipment. Some of the wells had separators or treatment equipment located on site. Since they were drilled by marine rig, all production equipment was located on pilings placed around the wellhead. There was some production equipment located in a salt marsh. Equipment included heater-treaters and scrubbers. All this equipment was located in elevated positions on pilings in the marsh. There were suspended catwalks over the marsh from one piece of equipment to the next. Flowlines ran over the surface of the marsh and hooked to the production equipment. There was a dock with a ramp that would allow equipment to be easily transferred from barge to land. However, it would be difficult to move much equipment on the salt marsh surface at that spot except during the driest times.

Installation and maintenance of lines. There were no pipelines crossing the refuge - only smaller flowlines. Except for the salt marsh production area where flowlines were laid on the surface, the rest were buried. Several flowlines ran from previously mentioned wells to upland areas. They were placed parallel and near to each other and seemed to run along together.

Spills and cleanup. There has not been a major spill since this area became a refuge. No refuge records are available regarding the nature of number of minor spills.

Site shutdown and restoration. The older sites had not been restored. Thus, a long dredged canal was still present and some older location sites were still obvious. Of the newer wells, channels and location sites remained. The area did not have debris left over from previous exploration; however, it

had not been restored to its original condition. The production site was in excellent condition. The equipment had been recently placed, but the adjacent salt marsh exhibited very few signs of damage from the construction activities.

Delta National Wildlife Refuge

The Delta NWR was acquired in 1936. The original owners retained the mineral rights to the Delta Duck Club tract, and they had leased the minerals to Texaco before the purchase. On another tract (Romere Pass), the U.S. Government was the mineral owner. Because of extensive mineral development in the area, USGS determined that there would be significant drainage of minerals underlying the Romere Pass tract. Therefore, BLM leased this area for mineral development to the California Company (Chevron), which began to develop the area in 1950.

Because of the ownership of minerals on the Delta Duck Club tract, routine oil and gas operations do not require permits. Usually a letter is sent by the company to the refuge manager describing the activity; however, Chevron is leasing the minerals from the U.S. Government in the Romere Pass area. Permits have not always been required for all activities relating to this development. In some cases, blanket permits have been given, and the refuge manager is kept informed of activities by short memoranda. He may then inspect any phase of the operation for approval.

There have been about 200 wells drilled on the refuge. The first well was drilled in August 1941. New wells are drilled each year. In 1972, there were 140 producing wells, 70 on each section. Production on the Romere Pass unit has been as high as 64 million liters (400,000 barrels) per month oil, 25 thousand liters (6,500 gallons) per month gasoline, and 57 trillion liters (2 million ft^3) per month natural gas.

Preexploration. There has been a great deal of seismic work done on this refuge, much of which has been explosive; there have been gravity meter surveys as well. Marsh buggies have been used extensively. Whereas the rubber-tired type of buggy has been used in Texas, most buggies on the Delta have been tracked vehicles. The USFWS required helicopter use for some explosive activity by Shell and Chevron, but buggies were still needed to flatten vegetation so that helicopters could land in marsh areas.

There were relatively few seismic permits in the refuge files. In one memorandum, a former manager noted that seismic activities were specifically permitted under terms of the lease to Chevron, and therefore many surveys may have been made without permits.

Access to site. All wellsites on the refuge are reached by dredged canals. Canals are typically 21 m (70 ft) wide and 2.4 m (8 ft) deep. Canal development is incremental. A first canal will be dredged off a main channel or pass and a well will be drilled. After the well has been drilled, a new canal will begin where the first left off and proceed to a new location 0.3 to 0.6 km (1,000 to 2,000 ft) away. A new well will be drilled, and the canal will again be extended.

Siltation from the Mississippi River is a major problem in the access canals. Maintenance dredging is often required. Spoil from dredging is often placed adjacent to the channel by bucket dredges. Occasionally a hydraulic dredge is used and when it is convenient, the outfall is placed in some of the deeper interdistributary ponds. The sediment deposited makes these ponds shallower and allows them to develop the type of vegetation usually formed before subsidence caused the ponds to become too deep to support plant growth. Older dredge sites sometimes had very high spoil mounds of 5 to 6 m (16 to 20 ft). Spoil is now kept to lower elevations so that spoil banks may occasionally be topped by high spring flood water.

The routes taken in the dredging are usually the most direct, and they may cross ponds and lakes. On occasion, complete canal systems may be interconnected by channels between one series of canals and another. The effects on circulation in the canals is unknown. In both fields, efforts have been taken to reduce the siltation problem. This included construction of bypass channels and rerouting of canals into the inner marsh areas so the entrance canals made sharp angles with pass channels.

Site preparation and operation. Wellsites are prepared for floating drilling rigs. A typical location site is 43 by 113 m (140 by 370 ft) and 2.5 m (8 ft) deep. Spoil is placed around the drill site to partition off the rest of the marsh. A typical location site may require removal of 11,600 m^3 (15,200 yd^3) of sediment.

Density of canals and wellsites on the Delta Refuge is impressive. One map showing an area of marsh 2.6 by 3.2 km (1.6 by 2 mi) had over 110 wellsites on it, plus all the canals leading to the sites. The development is so extensive that Gusey and Maturgo (1972) reported that nearly 3,645 ha (9,000 acres) of the refuge's 19,764 ha (48,800 acres) have been substantially altered by extensive crisscrossing of access canals and wellsites.

Drilling operations are restricted to the time of year when migratory waterfowl are not present. All equipment is contained on barges, and drilling operations proceed in a manner similar to that for sites off the refuge.

Placement and operation of production facilities. The Delta Duck operation has three separate tank batteries. One of these is placed on barges and

consists of a camp station, tanks, compressors, brine-treatment facilities, burn pit, brine-disposal line, separators, and precipitators. The other production facilities are located on pass banks and are mainly separators, storage tanks, and various sorts of treatment equipment. The largest production site is the Texaco terminal where ocean-going ships load crude oil produced on the refuge. This site is approximately 11 ha (28 acres) and contains tanks with a storage capacity of over 128 million liters (800,000 barrels). The site was made from spoil pumped from the docking basin onto pass bank and adjacent marsh areas.

Many wells in the Delta Duck field have treatment devices associated with them. These are usually line heaters that heat the materials in the flowlines and prevent blockage from hydrate formation. The heaters are located on separate pile formations and are connected to the wellhead by tubing.

There are two burn pits located on the pass bank. Each is surrounded by ring levees and contains smaller pits subdivided within. After the oil is burned off, the brine is placed directly into a canal where it is dispersed by the flow of water.

There is constant activity concerning production on this area. Wells are checked daily. Consequently, there is significant boat traffic in the area that adds to siltation problems and disturbance factors.

The Chevron operation consists of one production site located on the banks of Romere Pass. This site has tank batteries, compressors, separators, treaters, pumps, brine-holding facilities, and formerly, a saltwater disposal well all at one location. The equipment is on a wide pass bank surrounded by a levee. There are sublevees within the first levee, and all operations are monitored from this site. After hurricane Camille, Chevron rebuilt the production site to withstand hurricanes. Thus, operations buildings are raised approximately 6 m (20 ft) above water level.

Brine is cleaned by passing it through a series of settling and separation pits. It is disposed of by placing it directly into the pass with water flowing into the gulf. The brine disposal at this site comes from wells not only on the refuge but also offshore, since this production site is also used to treat petroleum produced in the gulf. The Chevron field also has continuous operation associated with production. Wells are checked every day, and normal production operations such as cleanout, workover, and maintenance continue.

Installation and maintenance of lines. There are several hundred flowlines crisscrossing the Delta Refuge, leading from wells to production sites. Most have been placed on the pass bank and marsh surface except where they cross canals. Older flowlines came to the edge of the spoil or pass bank and were bent sharply to pass beneath the canal. When canal banks have eroded,

some flowlines are left unsupported for long expanses. Newer flowlines are buried further back from the pass bank and slant gently downward below the canal bottom. The flowlines converge at production sites, gas lines going to compressors, and oil flowlines going to separators.

There are numerous oil and gas pipelines crossing the refuge, including 10-cm (4-inch), 15-cm (6-inch), 17-cm (6.6-inch), two 20-cm (8-inch), 31-cm (12-inch), 41-cm (16-inch), and 61-cm (24-inch) pipelines. Many of these pipelines lead from offshore and follow the Mississippi delta to eventually lead into the midwestern U.S.

The USFWS has generally required that the push method be used to construct these lines. In one recent example calling for the flotation method, the USFWS denied permission for placement unless the plan was modified for the push method.

Spills and cleanup. With the large amount of oil and gas development, the Delta Refuge experiences an average of two minor spills per month (Gusey and Maturgo, 1972). Most of the spills are quite small, no more than several barrels. They result from leaks, faulty valves, or accidents when loading or unloading. Occasionally larger spills occur, particularly with malfunctioning production equipment. In the past, burning pits have overflowed, spilling oil over several acres of marsh. Valves may malfunction. The companies are eager to cooperate in cleaning up a spill. They provide the manpower and equipment and clean the area to the manager's satisfaction. Cleanup operations for a spill involve isolating the oil with floating booms and sweeping the surface with vacuum apparatus. After surface oil was cleaned, workers entered the marsh and cut down all oiled vegetation. The vegetation was removed to a pass bank and burned. The area affected by the oil was no larger than 1 ha (2.5 acres), yet the crew of 6 to 8 men worked on its cleanup for 2 weeks.

Site shutdown and restoration. The Delta Refuge is an area of intense oil and gas activity. Though production has taken place on the refuge since 1941, wells are still being drilled. Relatively few restorative measures have been made in the area. Some permits, specifically for burning pits and pipelines, have required restoration of pass banks to original configurations. As a result, some old flotation canals have been plugged, and pass banks breached by recent pipeline construction have been reinforced. However, since continued drilling and production of wells on the refuge requires continual use of canals by boats, few access canals and wellsite locations have been closed off, and none has been filled in with old spoil material.

Sabine National Wildlife Refuge

The Sabine NWR was acquired in 1937 by judicial decree. Mineral rights for much of the refuge land, however, were owned by Texaco, purchased from the

original owners in 1934. This was also the year the first well was drilled on the land now making up the refuge. Since 1934, approximately 30 wells have been drilled in various parts of the refuge. Refuge records showed that only four wells were producing at the time of this study, though in 1972 there were two oil and six gas wells in production.

Texaco owns a large portion of the minerals outright. However, other mineral owners have leased mineral rights to various exploration companies, so there has been a variety of development. Considerable litigation has taken place to determine rightful ownership of minerals on several tracts, and in some instances the issue has not yet been resolved.

Preexploration. The area has been extensively surveyed by explosive seismic methods. Surveys have been done for Pan American Oil, Atlantic Richfield, and Texaco. Since Texaco is a mineral owner (not lessee), it has had the right to survey refuge land any time, though the company has generally conducted major activities only when migratory waterfowl are not present. Atlantic Richfield surveyed an area in East Cove in 1968. Two shot lines at right angles were followed. Survey lines were 5.5 km (3.4 mi) and 6.1 km (3.8 mi) long, respectively. Methods for transport included boat, buggy, and helicopter, since access to some areas was restricted by permit.

In 1974 a very extensive seismic survey was taken for Texaco. Four survey lines ran the width of the refuge (38 km, or 22 mi) while 6 lines ran the breadth (19.3 km, or 11.5 mi). The total survey encompassed a length of 250 km (170 mi). This was a part of Texaco's plan to have approximate three-mi grid coverage of the entire refuge. The company anticipated having even more intensive coverage in areas of potential prospects, though refuge records do not show that it followed through with this plan. The refuge promulgated regulations concerning seismic activities that restricted marsh buggy movement, required consolidation of trips, and protected levees during the survey.

Gravity surveys have also been conducted on the refuge, though all surveys were done in the 1950's.

Access to site. Eight wellsites have been approached by road. These include all the wells between Mud Lake and Calcasieu Lake. Raised roadways were built to reach these wells, and later a compressor station was built in the same area. One well near Stark's Canal was reached by building a levee with several low bridges approximately 2.3 km (1.5 mi) into the prairie marsh. Staggered borrow pits provided the fill for the levees. Later, however, cattle and wildlife movement over the solid fill between borrow pits caused a continuous channel to form into the interior. Now brackish water from the highway canal occasionally intrudes into the interior of the refuge marsh area. Two other wells were accessed by building sturdy bridges over the canals that run through the refuge. Equipment was moved to the wellsite by roads built on top of levees that impound some of the marsh. The levees had

to be widened and strengthened in some areas to accept the weight of heavy equipment.

Three wells were reached by a combination marine-land method. One of the wells required considerable negotiation before a mutually agreeable access route was decided upon. The company wished to enter Pool 3, a large (12,150-ha, or 30,000-acre) freshwater impoundment approximately 4.2 km (2.8 mi) west of the wellsite. It proposed to dredge all the way to the well stake. In order to minimize the total area of undisturbed marsh to be dredged, the USFWS proposed that the company deepen an existing canal for a distance of about 5 km (3.2 mi) and enter the freshwater impoundment by levee and board road from the north. This was the method finally chosen.

The remaining wells were reached by dredged canal. Most were near existing canals, and in some cases required only dredging of a wellsite adjacent to the canal. The current philosophy regarding access and site preparation for this refuge is to use board runs and marsh-level locations as much as possible.

Site preparation and operation. At dredged location sites, spoil was usually placed completely around the site in a continuous closed levee. Dredged wellsites were of a size typical for floating rigs. Older wellsites may have been elevated, but more recently. marsh-floor sites have been required with levees surrounding the work area.

The wellsites have had earthen mud and reserve pits. Some of the older sites still have the pit levees in place. However in newer sites, particularly in impounded marshes, the refuge has required that the pits be filled in and leveled. At the time of the study, Texaco planned a new well near the shore of Lake Calcasieu. Some agencies were pushing to require that pits be lined and that all mud and tailings be removed. The USFWS felt that a simple toxicity test of the materials in the pit might suffice to determine whether the materials may remain in the marsh.

Placement and operation of production facilities. Three areas on the refuge have production facilities. One tank battery was placed near Stark's Canal. A Dryex unit (compressor and drying appartus for natural gas) was placed near a number of wells and is used to pump natural gas. A tank battery with separators is located east of State Highway 27. The latter facility is located on an area of raised land and contains several tanks. It also contains a brine-holding pond that receives water from a separator. At the time of the study, the brine was hauled away by truck several times a week. However the company was planning a brine-disposal well. At one time, brine had been allowed to run out into the adjacent prairie marsh. A large stand of hog cane had originally been present, but the brine raised the soil salinity significantly, and the hog cane was largely replaced by marshhay cordgrass.

The production equipment and active wellsites were visited daily by gaugers and maintenance workers.

Installation and maintenance of lines. Numerous pipelines cross the Sabine Refuge. There is a pipeline running east and west that passes close to the southern boundary of the refuge. A small area east of State Highway 27 is the site of safety check valves that automatically shut down the line in case of leaks. The area was fenced and built up with shell and concrete.

At least seven other pipelines ran through the refuge in a north-south direction from the continental shelf. These pipelines have all been placed close together in a pipeline corridor leading across the refuge. Within this corridor are gas and oil lines including two 10-cm (4-inch), 11-cm (4.5-inch), two 15-cm (6-inch), 40-cm (16-inch), and two 75-cm (30-inch) pipelines. The refuge presents a strip nearly 50 km (30 mi) wide when viewed from the gulf. The corridor was created to allow access through the refuge without allowing assorted pipelines to cut the refuge into many smaller sections.

Because the USFWS has authority over pipelines entering from outside the refuge, very thorough and stringent stipulations have been applied to pipelines crossing the refuge. These have included methods of construction, placement of pig-launching stations, backfilling, and reinforcement and plugging of ditches where they cross canals or natural drainages.

Since these pipelines cross very wet marsh soils, most are protected by some sort of cathodic device. Appropriate transformer stations and sacrificial anodes are placed parallel to the pipelines.

Spills and cleanup. There have been instances of spills on the refuge. According to the refuge manager, most have been minor, and the company has been cooperative in cleaning up the area.

Site shutdown and restoration. The majority of wells drilled on the refuge have been abandoned. In the case of wells drilled on the marsh floor, little evidence remains of their existence. Pits were generally covered over, and the site was leveled. Some of the low bridges were removed. In the case

Site preparation and operation. All wells drilled had marsh-level drilling sites surrounded by levees. Wellsites ranged from 75 by 90 m (250 by 300 ft) to 122 by 122 m (400 by 400 ft).

The earlier two wells had mud reserve pits dug into the marsh. The most recent well, however, was allowed only one small reserve pit; all the rest of the fluids had to be contained in steel tanks, and tailings had to be hauled away. The refuge provided a mud-disposal site on the uplands. Significant activity took place both at the wellsite and along the board road. Vehicles continuously moved back and forth with supplies and crew. A vacuum truck made many trips along the road to the mud-disposal site.

Placement and operation of production facilities. No production facilities were located in the refuge. If the most recent well had been productive, plans were to have production facilities on the uplands with buried flowlines from the well.

Installation and maintenance of lines. At the time of the study an application was under consideration for placement of three adjacent pipelines: 15 cm (6 inches) for propylene; 25 cm (10 inches) for oxygen; and 31 cm (12 inches) for nitrogen. Three other natural gas pipelines flow to the Dow Chemical Company plant near Freeport. These are 15-cm (6-inch), 20-cm (8-inch), and 41-cm (16-inch) lines (Transcontinental Gas Pipeline Corporation, 1975). They were placed before the refuge was acquired.

Spills and cleanup. The oil and gas operations on the refuge have not had a serious spill. However, in 1973 a nearby well suffered a blowout. Mud and formation materials were spread over a large area, more than 100 ha (247 acres). In some places, sediment ranged from 15 to 120 cm (6 to 47 inches) thick, some coming from the blowout, while other amounts may have come from a dredging operation associated with the drilling. Some refuge land was affected by this accident. Restoration recommendations included removing silt from covered reefs, dredging more silted areas, and spreading clean oyster shell on former live reef areas to favor setting of oyster spot.

Site shutdown and restoration. No records exist concerning the cleanup operations for wells drilled previous to the refuge acquisition. For the two wells drilled in 1972, the board road was removed and the old reserve pits were fenced to keep cattle from intruding. The levee walls were breached, and board flooring was removed. At the more recent well, the flooring was removed and the board road was taken up. Part of the levee was immediately reseeded with gulf ryegrass and fertilized; the rest was allowed to revegetate by natural succession. Revegetation proceeded well during the growth period until dry conditions slowed the process. Feeding by geese resulted in cropping of above-ground vegetation and rooting of rhizomes.

SOURCES OF METHODS AND STANDARDS REQUIRED ON REFUGES

Methods, recommendations, and standards utilized on refuges were determined from detailed examination of refuge records and discussions with managers. Each refuge had a history of oil and gas activity in particular ecosystems. Since an object of this study was to assess past and present methods and formulate recommendations based on ecosystem type, all methods, standards, etc. were classified according to the sort of ecosystem affected.

A major source of information came from permits issued by the USFWS for various phases of oil and gas extraction. These permits are often the result of meetings and negotiation between the company, refuge manager, and regional office of the USFWS. There may be other interested parties having input into the process, including other branches of the USFWS, USACE, and state natural resource agencies.

The permits detail the activity to be carried out and include a series of stipulations, conditions to be met by the company, imposed by the USFWS. Stipulations fall into three general categories: administrative, aesthetic, and environmental. Among the administrative stipulations are statements ensuring that the company or contractor complies with the requirements of the Civil Rights Act of 1964, or that the U.S. Government is held blameless for any damages to mineral owners or lessors from actions taking place under the terms of the permit.

Aesthetic stipulations usually deal with control of trash and litter, though in the case of one pipeline permit, provision was made to paint equipment to blend into the background. The other types of stipulations deal with treatment of the environment and may be divided into two groups - broad general requirements, and specific requirements tied to particular geographic sites or conditions. Other documents of interest have included correspondence with companies seeking to develop on the refuge; reports of meetings with company officials; reports of field observations; memoranda to and from regional offices; correspondence with the USACE concerning Section 404 permits; reports of refuge biologists; notes of refuge managers; and technical information supplied by companies in their applications.

5. OVERVIEW OF IMPACTS ON ECOSYSTEM FUNCTION

COASTAL UPLANDS

Gas and oil extraction and development on the coastal uplands produce two levels of ecological effects. First-order alterations affect specific site characteristics. Although petroleum exploration and extraction processes may radically change the immediate area, ecosystem energy linkages and material storages remain essentially unchanged, permitting the system to continue to function as before. Isolated site alterations usually remove or radically change plant and animal assemblages as well as deplete or supplement local abiotic storages such that existing flow equilibria are disrupted. Compensating system readjustments are activated and reestablish the system's equilibrium.

Adjustments may include the export of surplus energy and materials or the increased retention of mobile elements. The moderating nature of the surrounding unmodified terrestrial environment quickly absorbs such energy or material pulses, thus preventing few, if any, changes large enough to affect the entire ecosystem. Small-scale fluctuations within the ecosystem continually occur as normal events and, unless artificially supressed, they automatically activate compensatory biotic processes which begin channeling energy and materials toward redevelopment of the initial or best-adapted plant assemblage. Consumer response varies as a function of the species' habitat requirements, seral stages replaced or introduced, areal extent and duration of the change, and the nature of the activity.

Second-order alterations are capable of producing fundamental ecosystem changes in terms of energy and material transport and biotic composition. Such large-scale changes result from (1) intensification or interruption of elemental ecological processes responsible for regulating ecosystem dynamics over extensive areas or (2) the accumulative/synergistic effects of numerous small-scale, but high-density, alterations. Major area-wide ecosystem alterations are typically characterized by extensive shifts in plant-community interspersion, abundance, and distribution. Associated faunal responses are predictable and are often characterized by major changes in species composition, age structure, and population levels as vegetative components increase or decrease.

Among ecological factors affecting fundamental processes of the coastal upland ecosystem, fire holds a position of major importance. Present-day

fires, or absence thereof, exert an influence as great as that of climate and soil in determining the persistent vegetation type. Cessation of periodic prairie fires has been a primary cause for the recent transition of coastal grasslands to brushlands and maritime woodlands. Development of extensive gas and oil fields and other types of coastal land use contributes to the potential elimination of periodic fire from large land tracts. Woody vegetation is encouraged to expand into herbaceous grasslands that formerly were perpetuated indefinitely by recurrent fires. Transition can sometimes occur quite rapidly. As plant assemblages change, faunal populations also readjust. Two classic examples of coastal upland wildlife populations that have responded to such shifts are the white-tailed deer, a brushland associate that has increased in abundance as its preferred habitat (brush-grass complex) has expanded, and the Attwater's prairie chicken, formerly abundant, but now rare due to loss of grassland habitats. The more expansive a developed field becomes, the more important fire is in the assessment of the long-term effects of this land use on coastal uplands.

Development of oil and gas fields with all associated facilities may not only suppress system regulatory processes, but may also cause ecosystem-wide changes via a large volume of small but accumulative site-restricted abiotic and biotic alterations. Each roadway, well-pad site, pipeline corridor, line installation, treatment/storage complex, and pumping station removes supporting habitat within the immediate site as well as modifies, and perhaps degrades, nearby habitats for sensitive species. Unrestrained growth and development of an oil field maximizes habitat fragmentation, which can radically alter biotic diversity, dispersion, and abundance. Not only is wildlife habitat removed directly through facility placement and site alterations, but the intrusion of man, his activities, and facilities into previously undisturbed wildlands alter additional habitat areas and trigger behavioral changes by sensitive faunal species. Widely scattered single facilities may cause only minor changes in regular movements, but as development and disturbances increase, intolerant wildlife species abandon areas, even though other aspects of supporting habitat remain adequate. Dislocated individuals may relocate to other suitable, unoccupied habitats, if available. Such incremental increases are individually small, but the cumulative effects inherent to development of a major field can be significant.

Regulations can effectively mitigate many potential adverse effects of gas and oil exploration and development by (1) minimizing the amount of land committed to gas and oil activities; (2) maximizing the efficient utilization of lands that must be committed to unavoidable alterations; and (3) restricting oil-related activities to refuge sites of low biological quality or those capable of rapid recovery with implementation of rehabilitation techniques.

MARSH ECOSYSTEMS

As is the case with upland ecosystems, petroleum exploration and extraction operations produce two obvious levels of ecological effects in marsh

ecosystems. The first level involves the radical change or complete removal of a given parcel of the system. Individual and cumulative perturbations of the substrate and floral components of wetlands will lead to changes in the fauna. These changes are predictable because major interdependent relationships between these elements of the system are known.

If the isolated alterations are of small magnitude, the functioning of the ecosystem is unimpaired. The preceding discussion of incremental losses of habitat and species displacement in coastal uplands is also applicable to marsh ecosystems. The pristine wetlands inherently experience natural fluctuations in various components, and they contain compensating mechanisms to accommodate such fluxes. Only when threshold levels of critical links and/or components are reached does the ecosystem change noticeably. This, of course, represents the second level of ecological impacts. Unfortunately, these ecosystem threshold levels are unknown.

Water is the major factor in maintaining marsh systems. Salt marshes and fresh marshes depend primarily on inputs of a single type of water - saline and fresh, respectively. Brackish marshes and delta marshes characteristically receive inputs of both water types, although not in equal proportions. The movement of water through the system is the important force driving and controlling the wetlands. Because roads, levees, and canals alter water flows, they are considered to be the source of the most important impacts at the ecosystem level. Indeed, they often become the boundaries separating two ecosystems.

The effects of man-induced landforms on the ecosystem are not nearly as predictable as their impacts on the small specific sites they occupy. Two reasons for this lack of predictability are apparent. First, the ecosystems operate over a larger area and a longer time scale than do the alterations. Second, the orientation of canals, levees, and roadways is such that the water flows of the ecosystems do not experience complete major changes: "all or none" situations are few. This means a relatively long period of time must pass before natural fluxes/cycles encounter these partial alterations. By the end of such a time period, additional and/or different alterations have frequently occurred.

These facts indicate that the way to maintain an ecosystem during petroleum exploration and extraction is to manage the ecosystem. But the dilemma is unavoidable - management decisions are typically concerned with relatively small areas and must occur over a short time scale; moreover, there is insufficient time to observe the wisdom of the choices, reflected by long-term changes. It would be highly desirable for the land manager to have, before major petroleum operations occur, a development plan for an entire oil or gas field. Presently, this does not and cannot occur. Drilling and extraction decisions are intermittent and based on cumulative information. Each new well provides data which are utilized in the decision of whether to drill another; in addition, the degree of speculation varies with the decision maker, the price of petroleum products, and other factors. There is no reason to expect this dilemma to change in the near future.

Different large-scale factors frequently confound management problems. Man-induced or natural phenomena that occur off the refuge or over an entire region (part of which is occupied by the refuge) are constantly interacting with the ecosystems found on the refuge. Examples include the Gulf Intracoastal Waterway, channelization of the Mississippi River and other shipping lanes, large-scale subsidence, periodic fires, periodic flooding, and altered sediment and river-water input. Such features are affected by, and have influence on, the petroleum exploration and extraction processes.

Thus, the existence per se of a maze of canals and/or levees in a given wetland area represents a loss of land habitat. More important, by providing a route of intrusion, it makes possible an additional impact - complete ecosystem conversion. The Sabine NWR is one example of such a situation. The waters of Sabine and Calcasieu Lakes became increasingly saline due to channelization of shipping lanes. The existing network of canals on the refuge provides an open passage for these waters into and through most parts of the refuge. Areas that were fresh marsh are now brackish marsh. The Delta NWR is another case where primary focus must be on regional phenomena. Any alteration which serves to isolate the "inner ponds" of the delta accelerates the loss of subaerial land habitat. The rate of subsidence in this area is great; therefore the existence of the delta ecosystem is dependent upon periodic flooding and its concomitant deposition of new sediments.

These regional phenomena cannot be completely controlled. Management must face the situation and make intermittent (sometimes daily) decisions concerning petroleum activities. It appears that an optimum strategy would be to consider and categorize all pertinent phenomena, commencing with long-term regional types and ranging downward through the ecosystems, culminating in specific sites of concern. These long-term phenomena, along with the goals of the particular refuge, must be kept in the foreground as periodic management decisions are made.

In regard to regulations and stipulations, this usually translates into: (1) minimizing total habitat losses during each phase of petroleum activities, (2) maintaining adequate major water flows for the particular wetland ecosystem, and (3) providing for restoration of landforms and conditions after petroleum operations have terminated.

The first category, minimizing habitat loss, can be attained by encouraging preferred methodologies: the push method of pipeline installation, double ditching techniques, directional drilling, and revegetation. Standardization of maximum dimensions would also be helpful for management.

The second category, maintaining water flows, requires knowledge of the water regimes of the entire region, ecosystem, and refuge. Without information concerning sheetflow and drainage of specific sites on the refuge, risk-laden decisions must be made. In planning for maintenance of existing water flows,

it would be prudent to assume that the density of canals, levees, and roadways in a given area will increase. This assumption will likely force implementation of measures which may appear to be very conservative, but which later allow the maintenance of water flows in the midst of increased petroleum development.

The final category, providing for restoration/mitigation, also requires much forethought. In most cases, stipulations and provisions must be composed many years before restoration/mitigation actions actually occur. Consideration of long-term phenomena and land-use goals will influence the stipulations concerning spoil disposal techniques and patterns, isolation (or filling) of obsolete canals, removal of levees/roads, and construction of wildlife enhancement structures.

6. ECOLOGICAL IMPACTS OF OIL AND GAS ACTIVITIES - DETERMINATION OF IMPACT CAUSE, EVALUATION OF METHODS, AND MODIFICATION OR PROPOSAL OF NEW METHODS OR STANDARDS

USE OF ECOSYSTEM DIAGRAMS FOR IMPACT ASSESSMENT

A description of the ecosystems diagram approach, its utility, its framework, and its dynamic processes is addressed in Chapter 3 of this report. The following discussion pertains to the analytical operations performed during the present study to determine those impacts resulting from specific development and exploration activities.

As was previously noted, the ecosystems diagram (ESD) approach is an analytical procedure that integrates a large amount of diverse information regarding a natural system into a graphic model, the ESD, and then uses the model to predict impacts resulting from system changes. Even though the ESD is the core of the assessment procedure, several other analytical phases are important to its utilization and therefore require discussion. The impact assessment procedure consists of four major phases: (1) determination of development activities, (2) determination of primary ecological alterations resulting from specific development activities, (3) analysis and evaluation of primary ecological alterations using the ecosystems diagram; and (4) impact prediction based on the synthesis and interpretation of ecosystem alterations.

Development Activities

Activities can be described as specific actions which impinge on resources either by construction-oriented development or by facility operation and maintenance. Activities can be characterized as the lowest order, man-induced physical processes which interact directly with definable aspect(s) of the natural environment (for example, digging a pit, clearing brush, or burning materials). A compilation of exploration and development activities is provided in Appendix A, and such activities were discussed in detail in Chapter 4. Activities have direct influences (through primary ecological alterations) on the ecosystem or parts thereof. Each activity is different in the sense that it produces a unique set of environmental alterations. Certain types of alterations may be shared with other activities, but other aspects remain unique. The combination of unique and common alterations defines that particular activity. Activities may also be assembled into various combinations that form higher order levels of organization, called "activity classes." The activity class can generate environmental alterations common to many of its

component activities, but it may possess unique characteristics as well. Road building is an example of a typical activity class which is a composite of many individual activities, such as vegetation removal, grading, filling, digging, and others.

Activity description and categorization may be achieved using data from two basic sources: (1) field observations of actual construction performances and (2) detailed step-by-step descriptions of how construction-operation-maintenance processes occur. It should be remembered that regardless of the hierarchical level of development being considered, the ecological alterations are caused only by individual activities even though changes may be frequently attributed to an activity class.

Primary Ecological Alterations

As a conceptual interface between activities in ecosystems and ecosystem changes, primary ecological alterations (PEA's) show the first, most direct, ecological responses to activities and thereby define the points of access to the ecosystems impact analysis. A list of primary ecological alterations is presented in Figure 6-1. The categories were drawn from several sources, including Leopold et al. (1971), Sorensen (1971), Dee et al. (1972), Moore et al. (1973), Dickert and Domery (1974), and Rice Center for Community Design and Research (1974, 1976). Primary ecological alterations are presented in five sequential categories: direct biotic effects, transfer of materials, changes in properties, energetic changes, and changes in water movement. Each category is prefaced by a question which specifies the condition by which any PEA in that category can be identified.

The PEA categories are arranged sequentially, from the top to the bottom of the list. This arrangement avoids correlated responses between natural processes and the resulting effects or movements of materials, phenomena which should be detected with the ESD model. For example, increased rate of water flow causes erosion of sediment; yet increased rate of flow is the primary alteration - erosion of sediment is a subsequent response. Therefore, in reading down the list, sediment removal would be identified as a primary alteration only if it is indeed a direct and immediate alteration (e.g., of topsoil removal).

PEA's are determined either (1) as a result of direct field observations or (2) through deductive processes resulting from careful review of accurate project descriptions. A definitive set of PEA's may vary for a given activity, depending upon the ecosystem type; for example, the set of PEA's generated as a result of vegetation removal in the coastal uplands differs from the set of PEA's resulting from vegetation removal in the brackish marsh. Finally, certain activity types have a larger number of primary ecological alterations than have others, as would be expected.

Direct Biotic Effects		Vegetation Removal - complete Vegetation Removal - specific layers or parts of plants Vegetation Removal - only selected species Consumer Removal - complete Consumer Removal - selected species
Does Activity directly add or remove these materials to/from outside the system? or from one place to another?	Water System	Dissolved Inorganic Materials (non-toxic concentrations) Colloidal Inorganic Materials Particulate (settleable) Inorganic Materials Dissolved Organic Materials (non-toxic concentrations) Immiscible Organic Solutions Toxic Materials
	Soil System	Water Particulate Inorganic Materials (with any adsorbed molecules) Particulate Organic Materials Toxic Materials
Are these properties immediately changed at activity site? Surface Properties	Subaerial	Slope (broad expanse) Relief (microtopographic features) Elevation (relative to surrounding area) Texture/structure (soil) Water Infiltration Rate Soil Depth Soil Moisture
	Subaqueous	Water Column Depth Benthic Sediment Texture Aerobic (anaerobic) Sediment Layer Thickness Slope (stream grade, bottom morphology) Relief (microtopographic features)
Does activity add or remove these energies?	Physical Effects	Kinetic Energy to Water Heat Energy to Water Heat Energy to Soil
If water flows in system, are these properties of flow changed?	Water Systems: Water from Land Runoff	Rate of Flow Duration of Flow Frequency of Flow Direction of Flow
	Water Systems: Water from Marine or Estuarine Sources	Rate of Flow Duration of Flow Frequency of Flow Direction of Flow

Figure 6-1. Potential primary ecological alterations resulting from petroleum development activities.

Ecosystems Analysis

Fundamentally, the ecosystems diagram functions as an analytical tool to predict and evaluate impacts. The preceding descriptive analysis of the components, flows, and regulating factors in each ecosystem is the basis for ecosystems diagrams (see Use of Ecosystems Diagrams, Chapter 3). The diagrams are visualizations of the ecological dynamics of each system, expressed in energy circuit language. Energy is the common connecting link between system components. The diagrammatic visualization of the ecosystems is not intended to be inclusive of all details, subtleties, or complexities of any of the systems. It is used with the previously described primary ecological alterations in systematically analyzing changes in ecological attributes resulting from development activities.

The operational aspects of ESD analysis divide into four major stages: (1) establishment of an analytical framework, (2) entering the ecosystems diagram with primary ecological alterations, (3) analysis of environmental alterations, and (4) synthesis of resulting impacts.

The analytical framework stage consists of establishing those ground rules and assumptions which guide the analysis. The ecosystems diagrams used are qualitative models which require operational rules in order to ensure analytical consistency at points lacking quantitative data. Important considerations include the following:

1. Establishment of working definitions and points of difference for items such as activity site, ecological community, ecosystem, etc.

2. Establishment of a temporal framework; i.e., definition of short-term and long-term effects and their points of reference

3. Establishment of a spatial framework; i.e., what are the relative sizes of the site and the community? Site and ecosystem? How large is the ecosystem?

4. Determination of analytical objectives; i.e., should the analysis detect any and all changes? Detect only changes relevant to biota?

5. Determination of critical ecosystem components which may be especially sensitive to particular developmental aspects; what/where are these critical components?

6. Establishment of general "significance levels," given the site characteristics, development type and size, and the points considered above

The second analytical stage involves entering the ecosystems diagram with each primary ecological alteration. The PEA indicates a direct effect in the ecosystem on storages of materials (soil salts, nutrients, detritus, micropore water, surface water); transformers (primary producers, various consumers); or on pathway regulators (ground cover, shade, flowing water). Quantifying the magnitude and duration of the PEA provides the initial point of reference needed to determine and evaluate the first ecosystem component affected. When an access point into the model has been identified and the initial alteration has been quantified with respect to duration, magnitude, and direction of change, the second phase terminates and stage three begins.

The third stage constitutes the "heart" of the methodology. All the analytical decisions regarding the (1) magnitude, (2) duration, (3) probability of occurrence, (4) subsequent second-, third-, and fourth-order effects, (5) synergistic properties, and (6) "significance" of the PEAS are determined here, relative to the predetermined scale of review. Depending on the magnitude and duration of the initial disturbance, secondary alterations may be systematically identified by checking, on the respective system diagram, altered energy/material pathways and altered energy/material storages or transformers. Tertiary alterations may be similarly identified. The procedure followed in conducting a PEA analysis can be summarized by the following synopsis.

Given a primary ecological alteration, the operator enters the model at a specific storage, transformer, or input. An estimation of the PEA magnitude, direction of change, and duration has been established as a result of the PEA determination phase and permits a judgment as to what the initial component (storage, transformer, or input) change will be. The resultant change, either an increase or decrease, will be for that particular component as a generated result of the PEA's. In addition, some estimate of duration of change, either long or short term, may be indicated. The first order or level of alteration(s) for that specific PEA has now been determined. The operator now notices that one or more pathways emerge from the initial storage, transformer, or input which has just been changed by the PEA. These pathways lead to other model components and represent either (1) material/energy flows into other system storages, outputs, or transformers or (2) a regulatory function of other ecosystem processes. Every pathway must be examined individually, with respect to characteristics of the activity and the ecosystem, and evaluated as to importance to the ecosystem. The evaluation process considers many aspects, the most important of which are: probability of event occurrence, magnitude of change, direction of change, synergistic effects, and counteracting processes. If a particular link is determined to be unimportant or incapable of altering the subsequent system storages or ecological processes which it leads to, then further consideration of that pathway is unnecessary and the analysis is terminated.

If, however, the magnitude, direction, and/or duration of a change is such that important alterations (third-order) are still evident, then the operator must continue the analysis by following subsequent linkages. Storages, outputs, and/or transformers that are connected to such linkages must also be examined to determine if significant increases or decreases in

those components are possible. The same analytical process is repeated as many times as necessary until endpoints are achieved for all primary, secondary, and higher-degree pathways.

The above procedure will yield a set of environmental alterations of different importance for each initial PEA analyzed. The fourth stage of the ecosystems analysis involves synthesizing and interpreting these alterations in order to determine those of greatest importance with respect to each PEA. Reevaluation of complimentary or neutralizing alterations may occur again at this stage. The net effects of the initial PEA in that particular ecosystem are thereby determined - these are now referred to as impacts.

Impact Assessment

Following the determination of impacts, it is necessary to consolidate them and evaluate their relative importance in terms of disruption of ecosystem stability. Ranking may be desirable in order to establish the impacts of greatest potential significance associated with a specific development phase. Impacts of similar effects can be aggregated and summarized, and irrelevant impacts can be deleted. The key attribute alteration, that primary ecological alteration which has the potential of causing the most extensive ecosystem change, can be determined. The foundations for subsequent stipulation evaluation are thereby provided.

SYSTEMATIC IMPACT AND METHODS ASSESSMENT

In the following sections, the impacts of oil and gas development phases have been determined for eight ecosystems. Because of their similarities, the upland systems - maritime forest, coastal grasslands, and brush-grass complex - have been treated together. Differences in their responses have been noted. This review serves only as a reminder of the basic activity sequence and does not attempt to give the detail that can be found in Chapter 4 in the section entitled, "Detailed Account of Normal Oil and Gas Activities."

For each ecosystem, a brief review is made of the activity phase. The primary ecological alterations are noted, and a discussion of important ecosystem attribute alterations is included. The key attribute alterations, the most important changes, are identified.

Chapter 7 provides a concise summary of the best-worded, most effective stipulations that land managers can use to assure maximum control over oil and gas activities on these lands. Some already are being used, others have been modified, and others have been proposed. The stipulations are organized in the same manner as the following discussion of impacts - by ecosystem first and then by development activity.

There are instances in which comments or results of analysis for two or more activities are similar. These repetitive portions could have been edited, instructing the reader to jump to other places in the chapter for more information. Since the purpose of the technical report was to provide a reference source for the land manager, and "cover-to-cover" reading of the chapter by the user was not anticipated, the repeated portions are included for completeness and ease of use.

Coastal Uplands

Seismic preexploration.

1. Activity Sequence

Seismic crews enter by truck, survey the site, and hand-clear a precise alignment through the vegetation for the placement of geophones and shot charges. A bulldozer may clear dense vegetation. The crew drills shot holes, lays connecting and sensor cables, and monitors the test. Following testing, shot tubes are retrieved, shot holes plugged with earth, and the crew either advances to the next series of stations or leaves the area. Preexploration ceases with vehicle exit.

2. Primary ecological alterations

2.1 Localized crushing and trampling of vegetation by survey and seismic vehicles

2.2 Creation of unvegetated shot lanes 3 to 4 m (10 to 13 ft) wide and hundreds of meters long

2.3 Localized loss of soil structure due to compaction caused by vehicular activity

2.4 Short-term displacement of sensitive wildlife species due to noise and human activity

3. Attribute alterations

The abiotic and biotic effects of seismic activity are very localized, quantitatively small, and of minor consequence at the ecosystem level of consideration, although specific site alterations may cause more significant disruptions at the community level. Important community differences are noted below (sections 3.1 to 3.3).

The community type regulates the clearing methods utilized to prepare a location for seismic testing. Where the vegetation type consists of low or medium grasses, small spot-clearing (widths up to 4 m, or 13 ft) may be sufficient; where dense brush or woodlands dominate, a dozer or clearing crew may be required for lane clearance. Thus, the net biological effects within a seismic lane can vary widely between community types.

Where the terrain is open and mobility is unrestricted, lightweight seismic vehicles move about the test area, temporarily crushing vegetation. Rapid regrowth occurs due to the survival of the root system and most of the aerial stems.

Where dozers are required to clear shot lanes, vegetation removal is complete. An immediate loss of wildlife food and cover resources results. Food and cover losses, however, are relatively minor for most mammalian and avian species due to the restricted areal extent of the line as compared to adjacent undistrubed areas. Quantitative assessment of the direct effects may be made by calculation of the area directly affected. Partial compensation is provided by pioneering herbaceous annuals and perennials and shrubs that invade and temporarily dominate newly exposed soils following removal of community dominants and later abandonment of the site. Long narrow corridors of more diversified flora are created, increasing local habitat diversity and "edge effect." Subsequent effects on local consumer populations are probably not noticeable, even though such ecotonal species as the cottontail, white-tailed deer, bobwhite, and numerous granivorous songbirds find such heterogeneous sites attractive feeding locations and may readjust their movement patterns to visit these areas. Therefore, energy links to the various consumer levels are not followed any further. Plant removal temporarily interrupts nutrient and detrital cycles on the specific site but is considered to be of minor ecosystem consequence because of the limited areal extent.

Indirect effects of corridor clearing are more difficult to assess. They are largely dependent upon intensity of seismic operations and the density of shotline placement. The greater the segmentation of the area by corridor clearing and seismic operations, the greater may be the indirect effects upon such aspects as nesting and reproductive behavior, territoriality, and habitat selection. Segmentation rarely results in isolation of areas as small as one km^2. However, shot corridors this dense could affect such species as javelina with a home range of 125 to 222 ha, or 313 to 555 acres (Ellisor and Harwell, 1969). Minimum habitat requirements of sensitive species should be considered in planning shot corridor layout.

Within the dozed shot lane, changes in soil structure occur as vehicular activity compacts the soil. Water infiltration rates are

reduced, locally increasing surface-water runoff. This runoff, however, is quickly moderated by surrounding vegetative cover and porous soil structure. Flat topography (slope) also discourages an intensification of erosional forces. Other effects are regulated by (1) soil structure, such as water-holding capacity, water percolation rates, groundwater recharge, and soil moisture evaporation, and by (2) vegetative cover, which controls certain soil structure aspects and evapotranspiration losses to the atmosphere. These pathways are certainly altered at the specific activity site but are of little consequence when compared to other contributing ecosystem sources.

3.1 Woodlands

Alteration of food and cover resources persists for long periods because of the long community regeneration time (50 to 70 yr). Seismic lanes create long grass corridors, increasing both local habitat diversity and edge effect. A long-term change results in community structure, biomass, and plant species composition within the lane. Effects on consumer populations are probably minor due to the restricted size of the seismic corridor.

3.2 Grasslands

Habitat changes caused by seismic activity in grasslands are very restricted in areal extent and of short duration (less than two yr). The open nature of this community type necessitates minimal clearing. Grassland recovery rates are relatively rapid (within two yr).

3.3 Brush-grass complex

Grass and/or brush removal increases the amount of shrub/grass interface (edge) by decreasing the shrub component and increasing early successional herbaceous grasses and forbs. The dominating influences of established plants on available soil moisture and light are removed. The amount of increased edge contributed by this activity is probably of minor consequence in increasing diversity within such a heterogenous community.

Displacement factors should be considered for all phases of activities. Disturbances associated with seismic testing vehicular traffic, human presence, and blasting noises - cause temporary displacement of sensitive wildlife species from otherwise favorable nearby habitats. Such factors cannot be traced through the ecosystem diagrams. The implications and

magnitude of such factors are difficult to accurately analyze with current technology, but they are recognized as important considerations that extend project effects beyond the boundaries of the immediate site.

4. Key attribute alterations

The key attribute alteration involves the direct removal of plant assemblages and alteration of habitats that occur within the shot lane and associated staging areas. Existing plant assemblages are replaced by earlier successional stages following completion of testing. In general, detrimental effects on consumer populations and plant assemblages are small in magnitude at the ecosystem level. Effects are mitigated by (1) the rather restricted area modified by the activity as compared to nearby similar habitats that remain unaltered, and (2) the relatively rapid (within one yr) plant reestablishment which follows cessation of seismic exploration. Vegetation losses are compensated for by the increased ecological diversity resulting along the seismic corridor. Woodland communities require considerable recovery time to reestablish original site conditions. Grassland recovery occurs within two yr.

Access to site.

1. Activity sequence

The survey crew enters and stakes the route. Clearing crews may follow to remove larger trees or other dense vegetation. Heavy construction machinery begins shaping the road base by stacking and packing earth. Base material is most frequently borrowed from both sides of the road, or occasionally it may be trucked in. The fill is shaped and compacted. Drainage is provided along the roadbed via the borrow ditches and under the road by culverts. Surfacing, if necessary, is accomplished using layers of shell or crushed rock. Construction ceases with the completion of surfacing and removal of heavy earth-moving equipment. Periodic maintenance requires filling holes, ruts, and small washouts with shell or gravel or by grading. Periodic replacement of broken conduit or boards may be necessary.

2. Primary ecological alterations

2.1 Creation of an unvegetated roadway 6 to 7 m (20 ft) wide and up to several km long

2.2 Removal of consumer groups habitat within the roadway

2.3 Loss of soil structure within the road easement due to construction machinery activities

2.4 Alteration of surface water drainages

2.5 Displacement of sensitive wildlife species from adjacent areas

3. Attribute alterations

Road construction removes all plant and animal populations within the road base alignment through cutting and clearing, grading, and filling and compaction. The effects are similar for all community types. Biotic components not in the alignment proper, but within the easement, are subjected to various levels of disturbance during construction processes. Large, well-maintained, and frequently-traveled primary roads produce the most extensive changes. Narrow, one-lane tracks, frequently unused, and secondary roads cause fewer alterations. In any event the original biotic communities within the easement are either completely removed or reduced in complexity.

Vegetation removal results in direct losses of food and cover resources for dependent consumers. Secondary consumers are affected indirectly because of removal or reduction of herbivorous prey organisms as well as loss of cover. Nesting, foraging, escape, and resting areas are altered or destroyed. Avian and mammalian species vary widely in their tolerance to habitat disturbance. Some species tolerate little alteration, while others prefer severely disturbed situations. In each case, species response is a function of time elapsed and the creation or destruction of the required niche. Impact magnitude is a function of a species' resource base (home range size) and the indispensability of the vegetation. Mobile, wide-ranging herbivores (white-tailed deer, javelina) or predators (coyote, red-tailed hawk) are not influenced as severely by such localized habitat alterations as are the less mobile smaller mammals (hispid cotton rat), breeding or strongly territorial songbirds, and reptiles which are restricted to limited areas. Less mobile species experience alteration of a larger proportion of their available habitat; thus, local populations may be severely depressed. The mean width of a typical access road is 6 to 7 m (20 ft) which results in a direct habitat loss of 0.6 ha per km (2.4 acres per mi) of road.

Detrital and nutrient cycle aspects of the vegetation are not treated further since those alterations with biotic consequences are not pertinent, as roadway activity precludes plant reestablishment.

Soil structure within the road easement is decreased by compaction due to vehicles. Water infiltration rates are reduced by losses of soil porosity, thereby decreasing soil moisture and water percolation through the soil. Surface-water runoff, intensified by compacted nonporous soils, lack of vegetative cover, and increased road shoulder slopes and roadbed elevation, increases the erosional transport of sediments and nutrients into adjacent areas. Transport is typically very localized in the coastal upland sites because of little topographic relief or slope and more porous soils enclosing the activity site. Large-scale upland effects at the ecosystem level are of minor consequence. Sediment and nutrient transport into adjacent wetlands or streams, however, is of greater concern as sediment introduction may cause significant system changes. Analysis, therefore, requires treatment through the appropriate aquatic ecosystem. Other soil structure aspects such as soil aeration, groundwater recharge, water-holding capacity, evaporation, and soil moisture are not considered further because either (1) contributions (or the lack thereof) to the ecosystem from these sources is insignificant in comparison to contributions from other sources, or (2) the parameters are inappropriate for further consideration since revegetation of the roadway is precluded by its use.

Road construction may disrupt the existing surface hydrology by blocking or filling stream channels or natural depressions. Perennial streams are either bridged or temporarily diverted while conduit is positioned. Intermittent or shallow drainages, however, may be totally blocked by the roadbed, creating impoundments of varying size and duration on the upstream side. Such increased surface water causes a new soil macropore-water/soil-air equilibrium to develop that produces more macropore water and less micropore air upstream and the reverse conditions immediately downstream. Subsequent major vegetational changes depend on the degree and duration of soil saturation and the areal extent involved. If drainage alterations are such that long-term increases in soil water result, then plant successional trends will shift more toward mesic communities of grasses and grass-like vegetation (*Scirpus*, *Juncus*, *Cyperus*, *Eleocharis*), as macropore water concentrations increase. Conversely, filling of low wet areas increases the local substrate depth, which decreases the soil macropore water (increases the soil air) and encourages invasion by more xeric plant assemblages.

3.1 Woodlands

Among coastal upland community types, the most extensive consequences result from the loss of acorn-producing oaks, especially the mature live oak, which has a recovery time of 50 to 70 yr. This species, in all its various life stages, is an important regulator by virtue of its consistent food- and cover-producing capacities. The following consumer groups are dependent at some point on the live oak for food or cover: hoofed mammals, small mammals, granivorous songbirds and game-

birds, insectivorous songbirds, predatory mammals and birds, reptiles, and various invertebrates.

The maritime woodland is particularly susceptible to surface water alterations which may increase the soil water volume and thus effectively raise the water table height. Root respiration is inhibited and eventual replacement may occur by more shallow-rooted woody shrubs or herbaceous grasses. If the road is to provide only temporary access then recovery or restoration becomes an important consideration. Restoration techniques are treated as a separate section of this discussion. Restoration of woodland conditions, even to a semioriginal state, requires considerable time and management effort.

3.2 Grasslands

Recovery times are relatively rapid in grasslands (less than two yr). Restoration to near original conditions can be easily accomplished with application of known management techniques. Notable examples of specific consumer populations intimately linked to coastal grassland communities are the red wolf and Attwater's prairie chicken.

3.3 Brush-grass complex

Recovery by grasses is rapid, with woody species requiring more time (approximately 5 to 10 yr) for reestablishment. Woody shrubs may be excluded for long intervals if fire occurs frequently. Depending upon the degree of plant group interspersion, this complex may support extremely diverse consumer populations. Notable associates are the white-tailed deer, javeline, coyote, bobcat, Rio Grande turkey, bobwhite, red-tailed hawk, and great horned owl. Vegetational alterations creating further habitat diversification are probably of minor consequence to ecotonal consumers. At the Aransas Refuge, whooping cranes occasionally seek protective cover and food from portions of this community type.

Disturbance factors should be recognized as an important consideration because they extend project impacts beyond the boundaries of the immediate site.

4. Key attribute alterations

The key attribute alterations involve primary and secondary effects. The primary effect is the direct long-term removal of plant assemblages and directly dependent consumer groups within the road

alignment. The secondary effect is the associated long-term gradual changes in nearby biota that result from subtle microenvironmental alterations of soil structure, surface water hydrology, partial vegetation removal, and disturbance factors. Changes are expressed as altered plant assemblages which are effected through competitive mechanisms. The species composition and population levels of the consumer groups may or may not respond to secondary habitat alterations.

Response is a function of the areal extent of the change, the size of the consumer's resource base, and the sensitivity of the consumer to altered habitat conditions. Sensitive wildlife species may abandon otherwise favorable habitats because of road-associated disturbances. Conversely, other wildlife species may be attracted to roadsides because of the presence of favored food items that have appeared.

Wellsite preparation and operation.

1. Activity sequence

Basically the same construction techniques and equipment employed in road construction are used in wellsite preparation. The survey crew enters and stakes the site. Trees or other dense vegetation are removed by clearing crews. Heavy machinery clears the remaining vegetation, then grades and levels the site to plan specifications. Retaining pits, low earthen levees, and other internal earthworks are excavated and shaped. Typical site dimensions are 97 by 122 m (320 by 400 ft). The pad site is surfaced with shell or crushed rock and compacted. Drilling equipment and support facilities arrive, are set up, and exploration commences. Auxiliary equipment and supplies are stored nearby for later use. Vehicles provide transportation. Drilling continues (averages one to three months) until a determination is made whether the well is productive. This decision determines whether the site is placed into production or abandoned.

2. Primary ecological alterations

2.1 Creation of an unvegetated wellsite complex typically one to two ha (approximately three to five acres) in area

2.2 Removal of consumer groups within the wellsite area

2.3 Loss of soil structure within the pad site due to movement of heavy machinery and construction activities

2.4 Introduction of toxic chemicals into the site's soils

2.5 Displacement of sensitive wildlife species from adjacent areas due to drilling operations and 24-hour-a-day human activities

3. Attribute alterations

Wellsite preparation removes all biotic components within the project boundaries through cutting and clearing, grading, filling, and excavation activities. Similar effects are produced in all three community types. A direct loss of one to two ha (three to five acres) of sustaining habitat results for primary and secondary consumers.

Food and cover elimination is particularly significant for small mammals, breeding songbirds, and soil invertebrates since proportionally larger portions of their resource bases are altered. Secondary consumers are affected indirectly by the removal or reduction of herbivorous prey organisms as well as loss of cover. Nesting, foraging, escape, and resting areas are altered or destroyed. Avian and mammalian species vary widely in their tolerance to habitat disturbance. Some species tolerate little alteration, while others (some of the sparrows, for example) can adopt to very disturbed situations. In each case, species response is a function of time elapsed and the creation or destruction of the required niche. Impact magnitude is a function of the species' resource base and dependence upon removed vegetation.

A typical wellsite location alters approximately 1.2 ha (3 acres) of existing habitat. Removal of plant cover encourages surface-water runoff from barren, newly exposed sediments onto adjacent upland systems. The resultant effects, as partially regulated by slope and elevation, are usually restricted in areal extent. Interruption of detrital and nutrient cycles, with subsequent nutrient reserve depletion through runoff and leaching may inhibit rapid plant recovery following site abandonment and restoration attempts.

Soil structure within the road easement is decreased by compaction due to vehicular activity. Water infiltration rates are reduced by losses of soil porosity, thereby decreasing soil moisture and water percolation through the soil. Surface-water runoff is intensified by compacted nonporous soils, lack of vegetative cover, and increased berm slopes and elevation. Sediment transport is typically very localized in the coastal upland sites because of little topographic relief or slope and more porous soils enclosing the activity site. Large-scale upland effects at the ecosystem level are of minor consequence. Sediment and nutrient transport into adjacent wetlands or streams, however, is of greater concern, as

sediment introduction may cause significant system changes. Treatment of impacts in adjacent systems, therefore, requires analysis of appropriate aquatic ecosystems with altered inputs of sediment and nutrients. Other aspects of soil structure include: soil moisture and soil aeration linkages to the flora; groundwater recharge, percolation, infiltration, and water-holding capacity linkages to the hydrosphere; and evaporation pathways to the atmosphere. Even though these aspects are seriously altered on the site (usually reduced), they are not considered for further analysis because either (1) biotic implications are not relevant since plant and animal recovery is precluded by drilling activities, or (2) the comparative effects from a single small site on the ecosystem's hydrologic or atmospheric regimes are considered to be very minor.

Pad construction may disrupt existing surface hydrology by obstruction or filling of intermittent drainages and shallow depressions. Site placement in marshes or small ponds is treated in the discussions of the marsh ecosystems. Drainage blockage may result in temporary ponding of the upper drainage and an increase in the macropore water storage. Site buildup in moist upland areas increases the zone of aeration in the soil. Either alteration may cause a local change in the existing soil air-moisture regime such that the existing floristic assemblages are replaced by species favored by the new equilibrium conditions. Dependent consumer groups may change accordingly, depending upon the areal extent of the alteration. Typically, the effects will be localized and result in no fundamental ecosystem changes unless numerous alterations are concentrated in a restricted area (as in the development of an extensive oil field).

Large and indiscriminate releases of toxic or noxious substances into the environment are regulated by numerous restrictions, regulations, and guidelines. Small-scale releases to the site, either accidental or intentional, occur regardless of the regulatory statutes. Ecological alterations associated with spills and cleanup are treated as a separate section of this discussion. Specific data documenting the ecological effects of toxic chemical discharge into upland communities have not been readily attainable in the scientific literature. However, soil salinity, which inhibits or prevents vegetative growth, is increased by seepage of oil field brine. It is reasoned that attribute alterations are very restricted in areal extent due to the low-volume discharge and limited lateral mobility of substances through soil strata. Local biotic effects are a function of the substance's toxicity, quantity released, ability to move through the food chain, persistence, and presence of sensitive biota; well drilling precludes the presence of plants and animals on the site. The effects of chemical residuals on site restoration are treated in a separate section of this discussion. The recuperative abilities of the soil's micro- and macrobiota and of more complex flora, from petrochemical discharges are not well understood.

3.1 Woodlands

Among coastal upland community types, the most extensive consequences to the largest variety and number of consumers apparently result from the loss of acorn-producing oaks, especially the mature live oak. This species, in all its various life stages, is an important regulator by virtue of its consistent food-producing and variable cover-producing capacities. The following consumer groups are dependent at some point on the live oak for food or cover: hoofed mammals, small mammals, granivorous songbirds and gamebirds, insectivorous songbirds, predatory mammals and birds, reptiles, and various invertebrates.

3.2 Grasslands

Recovery times are relatively rapid in grasslands (usually within two yr). Restoration to near original conditions can be easily accomplished with application of known management techniques. Notable examples of specific consumer populations intimately linked to the coastal grassland community are the red wolf and Attwater's prairie chicken.

3.3 Brush-grass complex

Recovery by grasses is rapid with woody species requiring more time for reestablishment. Woody shrubs may be excluded for long intervals if fire occurs frequently. Depending upon the degree of plant group interspersion, the brush-grass complex may support extremely diverse consumer populations. Notable associates are the white-tailed deer, javelina, coyote, bobcat, Rio Grande turkey, bobwhite quail, red-tailed hawk, and great horned owl. Vegetational alterations creating further habitat diversification are probably of minor consequence to ecotonal consumers. At the Aransas Refuge whooping cranes occasionally seek protective cover and food from portions of this community type.

Disturbance factors should be recognized as an important consideration because they extend the project impacts beyond the boundaries of the immediate site.

4. Key attribute alterations

The key attribute alterations involve primary and secondary effects. The primary effect is the direct long-term removal of plant

assemblages and directly dependent consumer groups within the well-pad site. The secondary effect is the associated long-term gradual changes of biota in nearby areas that result from subtle, microenvironmental alterations of soil structure, surface water hydrology, soil toxicity, selective vegetation removal, and disturbance factors. Community response to such secondary alterations is expressed by the different plant assemblages which develop through competition under new abiotic conditions. The species composition and population level of the consumer groups may or may not respond to secondary habitat alterations. Response is a function of the areal extent of the change, the size of the consumer's resource base, and the sensitivity of the consumer to altered habitat conditions. Sensitive wildlife species may abandon otherwise favorable habitats because of drilling, operational, and vehicle-associated disturbances.

Installation and maintenance of lines.

1. Activity sequence

This section describes events associated with the following types of lines: pipelines, flowlines, utility lines, and overhead electrical lines. The activity sequence associated with all types is basically similar, except that some require less extensive environmental alterations than others.

The survey crew enters and stakes the route and alignments. The clearing crew may follow to remove larger trees and other dense vegetation. Vegetation clearing may be partial or complete depending on line size and whether or not the line is to be buried. Large underground lines require total vegetation removal, usually completed with bulldozers. Construction equipment enters to prepare the site for access by trenching and line-installing equipment. Preparation involves grading, filling, and leveling procedures for larger pipelines, but for the installation of surface lines, utility lines following existing roadways, and small underground lines crossing level terrain, site preparation is minimal. For buried lines, a trench is dug and the spoil is piled continuously along one side. Holes are dug for pole placement to support elevated lines. Surface lines require no additional site alterations. Buried lines are laid, and trenches are covered by backfilling. The site is graded to flatten residual fill, reseeded, and abandoned. In the case of large pipelines and overhead electrical lines, the rights-of-way are periodically maintained either by mowing or with herbicide treatment. Emergency repairs or testing may occasionally require reentry of excavation and repair equipment to stop line leakage.

2. Primary ecological alterations

2.1 Partial or complete vegetation removal, depending on type of line being installed and the community type in which it is installed

2.2 Partial or complete removal of consumer groups, depending on the type of line being installed and its placement

2.3 Loss of soil structure within the easement due to movement of heavy machinery and construction activities

2.4 Alteration of surface water drainages

2.5 Introduction of toxic chemicals from chemical maintenance (herbicide treatment of rights-of-way) and from line discharges

2.6 Displacement of sensitive wildlife species from adjacent areas due to construction operations and human activity

2.7 Long-term establishment of subclimax communities along easement corridor as a result of periodic right-of-way maintenance

2.8 Transport of sediments to adjacent sites

3. Attribute alterations

Attribute alterations associated with line installation may vary widely depending on the type and size of line, site location, and placement methodology. Three general categories of lines segregated according to the similarity of ecological effects are described: (1) temporary surface lines to supply drilling sites with water and gas; (2) permanent overhead electrical lines to supply electrical and phone service to production, treatment, and pump station facilities; and (3) permanently buried lines which include utility lines (electrical, water, gas, and telephone) and flowlines (for brine disposal or hydrocarbon transport to treatment facilities), and gas/oil pipelines (for transport of product to distribution or additional processing centers).

Temporary surface lines, overhead electrical lines, and permanently buried utility lines usually follow existing road easements where maintenance and repair are easily accomplished. Associated ecological alterations are typically small, local, and occur in previously

altered locations. Distinguishable effects attributable to line installation that exceed or contribute significantly to road-associated effects are considered negligible. Thus, when such lines follow existing road easements, the alterations are considered to be of minor consequence to the ecosystem.

However, when overhead electrical lines or buried utility and flowlines require overland routes, the magnitude of attribute alterations increases. Vegetation is cleared as needed within the easement. Cutting requirements are regulated by the community type, being least demanding in grasslands and most rigorous in woodlands. Overhead lines require removal of woody components that interfere with installation and operation. Overhead line easements are typically 6 m (20 ft) wide, which alters about 0.6 ha per km (2.4 acres per mi) of easement. Buried utility and flowlines require further, often complete, vegetation removal along the alignment for placement and temporary spoil storage.

Easement dimensions are approximately equivalent to overhead line easements. An immediate loss of wildlife food and cover results. Such small food and cover losses, however, are relatively minor for most mammalian and avian species due to the restricted areal extent of the line as compared to adjacent undisturbed areas. Partial compensation is provided by pioneering herbaceous annuals and perennials and shrubs that invade and temporarily dominate newly exposed soils following removal of community dominants and abandonment of the site. Long narrow corridors of more diversified flora are created, increasing local habitat diversity and "edge effect" (Cody, 1975). Subsequent effects on local consumer populations, however, are probably not noticeable due to the relatively small quantitative increase in diversity. Energy linkages to the various consumer levels are not followed any further. Vegetation removal and soil alterations temporarily interrupt nutrient and detrital cycles at the specific site, but these alterations are considered to be of minor ecosystem consequence because of the limited areal extent.

Within the working easement, changes in soil structure occur as installation equipment variously compacts or loosens the soil. Compaction results from vehicular traffic of all types. Soil loosening occurs by digging, piling, and refilling activities. Proportionately more area is probably compacted than loosened, particularly with respect to overhead lines. Decreased soil structure reduces water infiltration rates, locally increasing surface-water runoff. This runoff, however, is quickly moderated by surrounding vegetative cover and porous soil structure since the areal extent of the right-of-way is usually small. Flat topography (slope) also discourages intensification of erosional forces. Other pathways - regulated by (1) soil structure, such as water-holding capacity, water percolation rates, groundwater recharge, and soil moisture evaporation, and by (2) vegetative cover, which controls certain soil structure aspects and evapotranspiration losses to the atmosphere - are

certainly altered at the specific activity site, but are of little consequence when compared to other contributing ecosystem sources. Therefore, further consideration of these aspects is not warranted.

Alterations associated with buried utility and flowlines are usually too small and localized to cause changes in surface water hydrology of the ecosystem.

Nearby flora are usually allowed to reclaim the disturbed sites. However, overhead electrical line easements are periodically maintained with herbicide applications or by mowing to suppress recovery of woody growth.

Placement of gas and oil transport pipelines involve the same basic installation procedures and create the same ecological alterations as placement of buried utility and flowlines. The operational scale in all respects, however, is much larger, and as a result, several formerly unimportant alterations subsequently require renewed consideration. A typical pipeline easement may be approximately 45 m (150 ft) wide, which results in direct habitat alterations of 4.5 ha per km (18.2 acres per mi) of easement. Large-scale plant removal means long-term changes in vegetation structure and composition. Food and cover for consumer groups are removed directly with loss of food-bearing and cover-producing plants, or indirectly by removal of prey organisms. Habitat losses are more significant due to the larger area affected.

Plant recovery following completion of activities creates long corridors of diversified, rapidly changing flora (Cody, 1975), which initiates utilization by early successional consumer groups such as small mammals, granivorous songbirds and gamebirds, and invertebrates. Further plant development encourages more characteristic ecotonal species to make use of pipeline corridors. Whether long-term compensatory changes result for particular consumer components is a function of the species' specific habitat requirements, the original cover type replaced, and the maintenance regime employed in the right-of-way. Secondary consumers find such heterogeneous sites productive feeding locations and readjust their movement patterns to visit such areas. Plant removal and soil alterations interrupt nutrient and detrital cycles within the corridor, which may contribute to site impoverishment if leaching and surface runoff are extensive. Recovery by more complex plant assemblages is prevented until suitable site microenvironmental conditions (soil moisture, soil heat, soil air, and nutrients) are restablished.

Large areas of vegetation removal, decreased soil structure (from soil compaction), short-term increased slope (from stockpiled earth along the trench), and temporarily increased surface water (from pumping seepage and rainwater from trench) increase surface-water

runoff and subsequent sediment and nutrient transport into adjacent areas. Resulting consequences to adjacent terrestrial communities may include localized burial of plants or plant parts by transported sediments, but such effects are usually very restricted. Sediment transport into adjacent aquatic systems may be of greater importance. See the ecological analyses of marsh ecosystems for further treatment of this aspect.

Earthwork can alter surface water hydrology through stream blockage and filling or drainage of low depressions. The micropore-water/soil-air equilibrium is altered such that soil air is increased through site drainage or decreased through impoundment. Vegetational changes are a function of the original plant assemblages present, duration of the alteration, and areal extent of the drainage modification. In terrestrial ecosystems, small-scale alterations cause localized plant compositional shifts from mesic to xeric species (with filling or drainage) or from xeric to mesic species (with impoundment). Major hydrologic alterations, such as long-term stream blockage or wetland drainage, result in loss of terrestrial systems and formation of aquatic systems in the former case and the reverse situation in the latter case. Possible shifts in the animal species composition and population levels may occur depending on the magnitude and duration of the vegetational changes.

Pipeline and overhead electrical line easements require periodic maintenance to suppress development of woody growth either by cutting, mowing, or herbicide application. Grassland communities are artificially selected and replace woodlands and shrubby cover types as long as maintenance continues. Grassland and ecotonal consumer species may benefit from habitat increases; woodland consumers experience habitat losses. Habitat diversity, in terms of plant species composition and age-class distribution, is altered within the pipeline corridor, which can contribute to increased heterogeneity in otherwise homogeneous areas.

Soil toxicants resulting from leakage of brine and/or petrochemical derivatives may reduce site plant complexity by replacing numerous intolerant plant species with a few hardy pioneers capable of tolerating extreme soil conditions (i.e., high soil salinity, toxic ion concentrations, or anaerobic conditions). Such effects are usually localized due to the restricted mobility of such substances in soil substrates. Large-scale spills or discharges are treated in the section on spills and cleanup.

3.1 Woodlands

In wooded environments, consumers dependent upon trees and understory shrubs experience long-term habitat loss or alteration. Magnitude is proportional to the size of the easement.

Early successional components such as grasses, forbs, and some brush increase following removal of community dominants (oaks) and subsequent improvements of available sunlight and soil moisture. Pipeline corridors lead to long-term changes in community structure, composition, and biomass when the site is converted from climax conditions to early successional stages. Consumer species highly dependent on tree strata (for example, fox squirrel, Rio Grande turkey, red-tailed hawk, great horned owl, and numerous canopy-dependent songbirds such as the vireo, chickadee, and titmouse (Parus spp.) experience immediate long-term alterations. In addition to direct removal by construction clearing, indirect alterations to the soil water-oxygen regime can lead to replacement of woodland components by more tolerant grasses and forbs.

3.2 Grasslands

Recovery of grasslands is generally completed within two yr in easement corridors. Areal coverage of this type is increased at the expense of other cover types, then artificially maintained by easement maintenance. Climax grassland conditions can be reestablished easily with existing management techniques.

3.3 Brush-grass complex

Recovery by the grassy components is relatively rapid, with woody species requiring greater time for reestablishment. Woody shrubs may be excluded permanently if fire occurs frequently or if regular brush-control is practiced by the pipeline company.

Disturbances associated with line installation typically cause short-term displacement of sensitive wildlife species from otherwise favorable nearby habitats. Following activity completion, these species reenter nearby sites if these remain essentially unaltered. Short-term displacement may reoccur during infrequent maintenance or repair sessions.

4. Key attribute alterations

Alterations associated with line installation are a function of line size, site location, and placement methodology. Temporary surface lines, permanent overhead lines within road easements, and buried utility lines and flowlines typically generate short-term impacts of limited areal extent that are quickly reclaimed by the system and generate little, if any, noticeable subsequent effects on consumer

components. Gas and oil transportation pipelines, on the other hand, modify important ecosystem attributes. Key alterations involve: (1) the immediate large-scale removal of existing plant assemblages and habitat components necessary to local consumer groups; (2) the long-term substitution of new plant cover types and community structure within, and sometimes adjacent to, the pipeline corridor (with resulting community conditions that may differ from initial conditions, leading to subsequent changes in consumer species composition and population levels); (3) alterations of the existing surface-water hydrology; and (4) short-term displacement of sensitive wildlife during construction and operation phases.

Placement and operation of production facilities.

1. Activity sequence

Production occurs both at the wellsite and at a central treatment complex. Normally at a wellsite only slight structural modifications of the existing pad are necessary to convert the well to production status. Placement of gathering flowlines from the well to the treatment facility requires activities as described for the installation and maintenance of lines; these include line survey, limited vegetation clearing, line installation and burial, and necessary site restoration. Construction of a processing complex and pipeline pumping stations follow the same basic activity sequence as that described for wellsite preparation, except that the placement of treatment, pumping, and storage facilities follows pad completion. Within the pad, foundations are dug and concrete is poured to anchor or support structures and equipment. Brine-disposal lines to the disposal well are installed although brine-storage pits occasionally may be dug, if necessary. Routine operation, maintenance, and repair of treatment, pumping, and storage equipment are conducted within the confines of the pad site. Processing wastes are stored within the complex area, disposed of via flowlines, or transported off site immediately. Typical areal extent of a production facility is approximately 0.4 ha (1 acre).

2. Primary ecological alterations

2.1 Creation of an unvegetated production or pumping station site typically 0.4 ha (1 acre) or less in area

2.2 Displacement of consumer groups within the facility site

2.3 Loss of soil structure due to movement of heavy machinery and construction activities

2.4 Introduction of toxic chemicals into the site's soils

2.5 Displacement of sensitive wildlife species from adjacent areas due to treatment processes and periodic human activity

3. Attribute alterations

Conversion of a well to production status creates few additional site alterations. All activities occur around the wellhead and central pad area. Operation consists of periodic maintenance and inspection visits. Equipment repair may occasionally require limited activity on the pad. Outlying portions of the pad revegetate following reduced disturbance levels. Consequently, considerations of the primary ecological alterations are concerned primarily with the construction and operation of a central treatment complex and pipeline pumping station.

Attribute alterations are similar in scope but smaller in scale than for wellsite preparation. Site preparation for the treating complex and pumping station removes all biotic components within the construction boundaries through cutting and clearing, grading, filling, and excavation activities. Similar effects are produced in all three community types. A direct loss of approximately 0.4 ha (1 acre) of sustaining habitat results for primary and secondary consumers. Food and cover elimination is particularly significant for small mammals, nesting songbirds, and soil invertebrates as proportionally larger portions of their resource bases are altered. Secondary consumers are affected indirectly by the removal or reduction of herbivorous prey organisms as well as loss of cover. Nesting, foraging, escape, and resting areas are altered or destroyed. Avian and mammalian species vary widely in their tolerance to habitat disturbance. Some species tolerate little alteration, while others are found only in severely disturbed situations. In each case, species response is a function of time elapsed and the creation or destruction of the required niche. Impact magnitude is a function of the species' resource base and the importance of the removed vegetation.

Removal of plant cover encourages surface-water runoff from barren, newly exposed sediments into adjacent upland systems. The resultant effects, as partially regulated by slope and elevation, are usually restricted in areal extent. Interruption of detrital and nutrient cycles, with subsequent nutrient reserve depletion through runoff and leaching, inhibit rapid plant recovery following site abandonment and restoration attempts.

Soil structure within the construction easement is decreased by the compaction due to vehicular traffic and concrete foundations and

other impervious linings. Water infiltration rates are reduced by losses of soil porosity, thereby decreasing soil moisture and water percolation through the soil. Surface-water runoff, intensified by compacted nonporous soils, lack of vegetative cover and increased pad slopes and elevation, increases the erosional transport of sediments and nutrients into adjacent areas. Sediment transport is typically very localized in the coastal upland sites because of little topographic relief or slope and more porous soils enclosing the activity site. Large-scale upland effects at the ecosystem level are of minor consequence. Sediment and nutrient transport into adjacent wetlands or streams, however, is of greater concern as sediment introduction may cause significant system changes. Analysis, therefore, requires treatment through the appropriate aquatic ecological system. Other soil structure aspects include soil moisture and soil aeration linkages to the flora; groundwater recharge, percolation, infiltration, and water-holding capacity linkages to the hydrosphere; and evaporation pathways to the atmosphere. Even though seriously altered on the site (usually reduced), these aspects are not considered for further analysis because (1) biotic effects are not relevant since plant and animal recovery is precluded by operational activities, or (2) the comparative effects from a single small site on the ecosystem's hydrologic or atmospheric regimes are considered to be very minor.

Production facility construction may disrupt existing surface hydrology by obstructing or filling intermittent drainages and shallow depressions. Site placement in marshes or small ponds is treated in the discussions of the marsh ecosystems. Drainage blocking may result in temporary ponding of the upper drainage and an increase in the macropore water storage. Site buildup in moist upland areas increases the zone of aeration in the soil. Either alteration may cause a local change in the existing soil air and soil moisture regime such that the existing floristic assemblages are replaced by species favored by the new equilibrium conditions. Dependent consumer groups may change accordingly, depending upon the areal extent of the alteration. Typically, however, the effects will probably be localized and result in no fundamental ecosystem changes.

Small-scale releases of toxic substances inevitably occur at the complex in spite of the preventive and maintenance procedures instituted. Ecological alterations associated with larger spills and cleanup are treated as a separate section of this discussion. Specific data documenting the ecological effects of toxic chemical discharge into upland communities are very sparse in the literature. However, soil salinity, which restricts or prohibits vegetative growth, can be increased by seepage of oil field brine. It is expected that ecological alterations as a result of normal operational procedures are very restricted in areal extent due to the low-volume discharge and limited lateral mobility of substances through soil strata. Local biotic effects are a function of the substance's toxicity, quantity released, mobility through the food

chain, persistence, and presence of biota on the site; processing and pumping activities preclude the presence of plants and animals on the site. The effects of chemical residuals on site restoration is treated in a separate section of this discussion. The recuperative abilities of the soil's micro- and macrobiota, as well as more complex flora, from petrochemical discharges are not well understood. Pumping stations and processing complexes are more or less permanent facilities which effectively remove portions of the community from long-term production.

4. Key attribute alteration

The key attribute alterations involve primary and secondary effects. The primary effect is the direct long-term removal of plant assemblages and directly dependent consumer groups within the production site. The secondary effect is the associated long-term gradual changes in nearby biota that result from subtle, microenvironmental alterations of soil structure, surface water hydrology, soil toxicity, partial vegetation removal, and disturbance factors. Community response to such secondary alterations is expressed by the different plant assemblages which develop through competition under new abiotic conditions. The species compositions and population levels of the consumer groups may or may not respond to secondary habitat alterations. Response is a function of the areal extent of the change, the size of the consumer's resource base, and the sensitivity of the consumer to altered habitat conditions. Sensitive wildlife species may abandon otherwise favorable habitats because of operational and vehicle-associated disturbances.

Spills and cleanup.

1. Activity sequence

Accidental discharge of oil, gas, field brine or other substance occurs as a result of equipment failure, improper equipment operation, or human error. Built-in safety mechanisms, if present, are activated automatically to limit the quantity of discharge. Field personnel, once aware of the spill or leak, immediately initiate procedures to confine discharges to the smallest possible area. Containment berms or levees are erected to prevent further liquid spreading, or shallow ditches are excavated to intercept, channel, and concentrate the effluent into collection sites. Dozers, graders, and backhoes are used for such earthwork. Straw or hay is used to adsorb smaller, less accessible quantities that vacuum trucks cannot remove. Vegetation coated with oil or its derivates is either cut or burned. If burning is planned, the contaminated area is enclosed by fire lanes. Contaminated soils may be excavated, removed, and replaced with other fill materials. Soil replacement signals completion of the cleanup phase and the beginning of site restoration.

2. Primary ecological alterations

Alterations will vary according to the community type affected, cleanup method, toxicity of the chemical substance that is released, and spill size.

2.1 Partial or complete removal of vegetation within the spill and cleanup site; magnitude varies according to spill size

2.2 Loss of consumers from the affected area

2.3 Increase in soil toxicants from petrochemicals

2.4 Increase in soil salinity from brine spill or leakage

2.5 Loss of soil structure due to excavation and other earth-moving activities or because of petrochemical cohesion of soil particles

2.6 Possible loss of soil nutrients due to soil extraction and replacement by soil materials of unknown fertility

2.7 Possible increase in available nutrients due to burning of contaminated vegetation

3. Attribute alterations

Plant assemblages are removed or altered by: (1) the toxic effects of brine or hydrocarbons; (2) the cleanup procedures; or (3) modifications of the soil's microenvironmental regime. Areal extent is a function of the spill size. If large quantities of the material are not dispersed rapidly over wide areas, mobile terrestrial consumers capable of avoiding contaminating substances leave the area. Less mobile consumers may be coated with oil or other noxious effluents and lost; food and shelter become so degraded as to provide minor benefits to all consumers which previously utilized the site. Discharge of brine effluent alters or removes plants because of physiological stresses produced by osmotic water losses. Hydrocarbon fractions or derivates may have similar effects, but act instead upon other physiological mechanisms. Loss of plant cover, either through immediate, direct means such as cutting and burning or through slower acting mechanisms such as brine increasing soil salinity, means locally increased soil heat, soil moisture evaporation, and surface-water runoff. The magnitude and subsequent implications upon the biotic systems depend upon too many unknown variables (spill

size, vegetation type, cleanup method, extent of plant removal, site use, etc.) to warrant further consideration.

Cleanup of residual oil or oil quantities too small to be efficiently removed with conventional collection techniques is accomplished by burning the contaminated site. Producers, and consumers which do not abandon the site, are lost. Fire accelerates biomass decomposition, thereby increasing the availability of soil nutrients which enhances plant reestablishment.

Excavation and removal of soils impregnated with oil, brine, or other deleterious substances alters soil structure and soil nutrient reserves. Loss of available nutrients impoverishes the site, slowing down later plant recovery. The consequence of soil structure alterations is more important as this physical feature regulates several important aspects of later plant establishment and growth. Chief regulatory factors are soil moisture and soil air. Replacement soil, if similar in type, profile level, and texture, facilitates rapid reestablishment of previous soil conditions. Dissimilar substrates (in salinity, texture, structure, fertility) alter microenvironmental conditions such that subsequent plant assemblages different from the original flora may result. The significance of such abiotic alterations upon biotic components is a function of the alteration's areal extent, existing site conditions (whether natural or impacted), and future site uses.

3.1 Woodlands

Removal of woodlands as a result of oil spills causes long-term (50 to 70 yr) changes in community structure and biomass. Replacement occurs with grasslands and possibly a brush-grass complex in later stages. An important source of food is removed for the following consumer groups: hoofed mammals, small mammals, certain granivorous birds, and some invertebrate consumers. Magnitude of importance is dependent upon amount removed or altered. Cover or shelter requirements are altered or removed for long periods for predatory mammals, raptors, and certain insectivorous songbirds, as well.

3.2 Grasslands

Removal of grasslands can result in long-term changes, but with restoration and favorable growing conditions, recovery generally occurs within two yr. Usually only a temporary loss of food and cover results to consumer groups as few species are specifically linked to specific grass species; life form is more critical.

3.3 Brush-grass complex

Recovery in the brush-grass complex is slower than in grasslands, and most likely the site will initially reestablish with grasses. The proportion of brush depends upon land management practices, fire regime, and vigor of surrounding grasslands. Consumer groups are probably not noticeably affected unless a large area is altered.

Disturbance factors should be recognized as an important consideration because they extend the project impacts beyond the boundaries of the immediate site.

4. Key attribute alterations

The primary alteration is the complete or partial removal of vegetative components resulting from the cleanup procedure. Removal produces community disruptions which require reestablishment of new equilibrium conditions through competitive biotic processes. Dominating influences on soil moisture and solar energy are reordered such that resource availability is increased, at least temporarily, allowing suppressed flora or earlier seral stages to appear. Consumer response varies by species, size of the area affected, and the extent of the floristic change. Clean up methodology determines site alterations that occur and whether subsequent biotic changes are temporary or long term.

The existing data are insufficient to evaluate whether greater detrimental effects result from the introduction of petrochemicals into upland systems or from the cleanup efforts (cutting, burning, soil extraction) directed at their removal.

Site shutdown and restoration.

1. Activity sequence

Completion of pipeline installation and trench backfilling, removal of production facilities, or road abandonment usually signals initiation of the shutdown and site restoration phase. Structures, equipment, concrete foundations, pipes, well casings, drilling mud, and other artifacts of oil production are removed if they possess salvage or reuse value. Otherwise, only as much attention is paid to restoration procedures as is required by Federal and state regulations, lease stipulations, and general company policy. Typically, restoration includes removing or burying toxic substances, refilling all pits, knocking down earthen levees, and generally leveling the site.

Original site contours may be reestablished. If topsoil was stripped and separately stored, it is replaced. Natural processes may be relied upon to reestablish ground cover or, if revegetation is conducted commercially, available seeds of hardy, very adaptable grasses, such as bermuda grass (Cynodon dactylon), are sown on disturbed soils. Fertilization, mulching, and final top dressing may occur. Vehicles generally exit after distributing the seed and dressing the site.

2. Primary ecological alterations

2.1 Increase in soil structure due to grading, filling, and plowing

2.2 Decrease in soil toxicants due to removal of oil-, brine-, and mud-contaminated soils

2.3 Increase in available nutrients with fertilization

2.4 Increase producer biomass by reseeding or replanting

3. Attribute alterations

Procedures that reestablish soil structure damaged by construction and operational activities are most beneficial for restoring site vegetation. Grading, plowing, and discing fragment the soil crust and increase water permeability and infiltration rates of the surface soil; simultaneously, surface-water runoff and sediment transport into adjacent areas are reduced. Micropore water and soil air concentrations increase because of improved soil porosity, thereby enhancing soil environment for plant establishment. Soil moisture not only provides necessary water for the plant, but may also moderate the extreme effects of soil heat and soil salt content.

Replacement of leached and eroded nutrients (through fertilization) and removal of toxic soil materials (brine, petrochemical wastes, and drilling substances) speed natural recovery processes, enabling establishment of more complex plant assemblages without requiring preceding seral stages to develop necessary soil conditions. Fertilization has the greatest potential for long-term benefits by improving soil structure, increasing biological activity in litter and soil, balancing soil nutrient status, and reducing mobility of toxic elements. Fertilizers may speed cycling of nutrients by mobilizing anions and cations if biomass exists that can capture them. However, if not captured, the more mobile ions may leak to shallow groundwater aquifers, drainage ditches, streams, and marshes.

Artificial revegetation facilitates rapid reintroduction of producer biomass on denuded areas, thus speeding the return to initial site conditions. Native plant species provide food and cover resources most compatible with requirements of nearby consumer groups. A mixture of grasses, forbs, and shrubs improves herbage production and forage values more than single-species coverage as site variability becomes less critical in establishing cover. Site compatability and interfacing with nearby undisturbed areas is established. Climax species ecotypes are desirable if site soil characteristics are not greatly altered, particularly if reestablishment to original site conditions is preferred. On more adversely disturbed sites (dry, infertile), pioneer or seral species can be utilized as site conditioners to aid in the natural succession to climax species. Land management objectives regulate what cover type is planted and, thus, which specific consumer groups are encouraged by habitat expansions.

Reestablishment of initial surface contours and drainages restores surface and subsurface hydrological patterns. Former soil macropore-water and macropore-air regimes equilibrate, and the biota associated with such regimes are maintained or encouraged. In most upland situations this ecosystem effect is minor in consequence.

Mulch, a temporary surface covering of straw, woodchips, asphalt emulsion, jute matting, or similar materials, moderates several important surface soil aspects that regulate plant germination and growth. Mulch application on disturbed sites moderates soil temperature fluctuations, retains soil moisture, and contributes to soil fertility; in conjunction with soil structure, it increases surface water infiltration, reduces surface sheetflow, and retards soil erosion. Replacement of topsoil has the same effect, and it is more permanent.

3.1 Woodlands

Maritime woodland types are least readily restored in coastal plain environments due to the long regeneration time. Several important upland game species are linked to this cover type, as year-long cover. This community type is stable once established.

3.2 Grasslands

Grassland cover can be replaced easily and rapidly with existing techniques and knowledge. Introduced grass species are more readily obtainable commercially than locally adapted natives, but the latter provide more compatible wildlife food and cover. Ground cover is quickly established, which retards

soil erosion, enhances soil moisture, soil aeration, and fertility. The site is prepared for later plant changes.

3.3 Brush-grass complex

The brush-grass complex is also a relatively easy and rapid cover type to reestablish. Replacement with mixtures of native forbs, shrubs, and grass species may compensate some of the upland consumer species adversely affected by woodland losses.

Disturbance factors should be recognized as an important consideration because they extend the project impacts beyond the boundaries of the immediate site.

4. Key attribute alterations

Restoration of soil structure is the pivotal aspect of site rehabilitation which controls other regulatory parameters that determine the suitability of the edaphic environment for plant growth. Soil structure regulates the infiltration of soil air and soil moisture, surface-water runoff, water permeability, and water-holding capacity. Second-order effects include regulation of soil erosion, nutrient availability, and soil salinity. Several management techniques are available which accelerate site recovery and allow selection of specific plant assemblages for reestablishment.

Salt Marsh

Seismic preexploration.

1. Activity sequence

Surveyors enter the marsh by marsh buggy or foot, stake the lines, and mark the areas where shot holes and geophones will be placed. Vegetation may be cleared along a path 3 to 4 m (10 to 15 ft) wide if the plants are tall and/or dense. A drilling buggy and one or two support buggies enter next; holes are drilled, charges and recording equipment are placed, and shots are fired. Geophones are retrieved and placed for the next series of shots. After completion of an entire shot line, the holes are plugged and the crew exits.

2. Primary ecological alterations

2.1 Creation of ruts or depressions in the land surface

2.2 Trampling and crushing of vegetation along shot line path and access routes

2.3 Creation of pathway for increased saltwater inundation

2.4 Creation of pathway for increased rate of flow of runoff

2.5 Change in frequency of inundation in localized areas

3. Attribute alterations

The movement of work crews and marsh buggies over the land surface tramples and crushes vegetation in a zone wider than that cleared for shot placement. Depending upon the soil moisture conditions, the vegetation may be completely uprooted and destroyed in some areas. This decreases food and cover for the consumers in the area. The total area thus affected is usually small in comparison to the remaining area of productive vegetation, and the effects on animals, nitrogen fixation, and detritus export are insignificant.

The depth and number of ruts created by marsh buggies is dependent upon the number of vehicles and the degree to which they retrace existing tracks. In areas that are submerged daily, the depressions are less likely to significantly alter water movement patterns. Hence, in areas near the water's edge, confining of marsh buggy traffic to a narrow corridor may be wise. However, in areas further removed from the estuary, deep ruts resulting from retraced trails form a depression for the movement of water and, if deep enough, may result in standing bodies of water after the tide has receded. The orientation and depth of the depressions determine whether they (1) remain for long periods of time and (2) increase or decrease the frequency of inundation of a given area of land. Areas dominated by saltgrass or shore grass (Monanthochloe littoralis) may be replaced by stands of smooth cordgrass when the frequency and/or duration of inundation increases. The converse may occur when frequency and/or duration of inundation decreases. The total area affected is site specific and could range from insignificant to highly significant when compared to the total area of salt marsh. Consumers that depend upon smooth cordgrass and its epiphytes for food and/or cover may ultimately increase or decrease.

The amount of detritus exported to the adjacent estuarine system is directly proportional to the standing crop of smooth cordgrass. If the affected area is close to the estuary, the frequency of inundation and detritus export may remain unchanged. However, the depressions allow faster movement of water in both directions. This increases turbidity and decreases the efficiency of the detritus-filtering mechanism of the salt marsh. Thus a net increase of

exported detritus could result. Net amounts of nutrients and sediment probably would not change significantly in areas frequently inundated. In portions of salt marsh further removed from tidal action, the faster movement of water on and off the marsh surface may result in net losses (Copeland and Dickens, 1974).

If the affected area is further removed from the estuary where isolated ponds may exist, intramarsh circulation could be affected. Depressions could connect individual water bodies and increase the intermixing of their contents. Waterfowl and wading bird use would be expected to increase in these new depressions with standing water. At the ecosystem level, however, this increase is slight.

The degree and significance of wildlife displacement resulting from all preexploration activities is impossible to predict or quantify. The point where noise and human presence may change temporary and partial displacement to permanent and complete displacement is unknown, but this factor should be considered during all phases of activities since it extends the effects of the project beyond the boundaries of the immediate site.

4. Key attribute alterations

The alteration which leads to the most significant impacts on the ecosystem is the creation of depressions in the land surface. Effects which are long term and large in areal extent may result from induced changes in waterflow regimes. As discussed earlier, the total area affected (and thus, the kinds and numbers of consumers) is site specific.

Gravity preexploration.

1. Activity sequence

Gravity surveys may involve the placement of a relatively small piece of equipment on the marsh surface. This unit (the gravity meter) may be carried to stations by marsh buggy, boat, or foot. Survey crews are not required since data need not come from predetermined locations. It is necessary only to plot the locations of the data-collection stations on a map. A small amount of vegetation is trampled during the placement of the gravity meter. Several minutes are required for data collection; the unit is then packed and carried to the next station. The number of stations required for a gravity-meter survey is less than the number of shot holes necessary for a seismic survey. Two men with adequate transportation can efficiently conduct a gravity-meter survey.

2. Primary ecological alterations

2.1 Possible creation of ruts or depressions in the land surface

2.2 Trampling and crushing of vegetation at the station locations

2.3 Possible creation of pathway for increased saltwater inundation

2.4 Possible creation of pathway for increased rate of flow of runoff

3. Attribute alterations

The movement of vehicles and workers over the marsh surface crushes vegetation. The vegetation may be completely uprooted and destroyed in some areas depending upon the soil moisture conditions and the type of transportation that is utilized. The vegetation loss results in an immediate decrease in food and cover for the consumers in the area. The total area affected is usually very small in comparison to the remaining area of productive vegetation because (1) the gravity meter is quite portable, (2) data stations are not located along predetermined straight lines, and (3) the stations are not regularly spaced. Stations may frequently be accessed by boat or by foot; a maximum of one lightweight surface vehicle is necessary for the entire operation. Furthermore, this vehicle need not travel straight-line paths across the marsh surface; it can make maximum use of existing roads or canals. Therefore, the effects on consumers, nitrogen fixation, and detritus export are negligible.

The above discussion indicates total vehicular traffic associated with gravity surveys is less than that associated with seismic surveys. Nevertheless, any marsh-surface vehicle may potentially alter local land elevations. The depth and number of ruts created by marsh buggies is dependent upon the number of vehicles and the degree to which they retrace existing tracks. In areas that are submerged daily, the depressions are less likely to significantly alter water-movement patterns. Hence, in areas near the estuary, confinement of marsh buggy traffic to a narrow corridor may be wise. However, in areas further removed from the estuary, deep ruts resulting from retraced trails would form a depression for the movement of water and, if deep enough, may result in standing bodies of water after the tide has receded. The orientation and depth of the depressions determine whether they (1) remain for long periods of time and (2) increase or decrease the frequency of inundation of a given area of land. Areas dominated by saltgrass or shore grass may be replaced by stands of smooth cordgrass when the frequency and/or duration of inundation increases. The converse may occur when frequency and/or

duration of inundation decreases. The total area affected is site specific and could range from insignificant to highly significant when compared to the total area of salt marsh. Consumers that depend upon smooth cordgrass and its epiphytes for food and/or cover may ultimately increase or decrease.

The amount of detritus exported to the adjacent estuarine system is directly proportional to the standing crop of smooth cordgrass. If the affected area is close to the water's edge, the frequency of inundation and detritus export may remain unchanged. However, the depressions allow faster movement of water in both directions. This increases turbidity and decreases the efficiency of the detritus-filtering mechanism of the salt marsh. Thus a net increase of exported detritus could result. Net amounts of nutrients and sediment probably would not change significantly.

If the affected area is further removed from the estuary where isolated ponds may exist, intramarsh circulation could be affected. Depressions could connect individual water bodies and increase the intermixing of their contents. Waterfowl and wading bird use would be expected to increase in these new depressions with standing water. At the ecosystem level, however, this increase is slight.

The degree and significance of wildlife displacement resulting from gravity-meter surveys are slight. This is because of the small number of people, lack of noise, and short period of time (usually one day) required to complete a survey.

4. Key attribute alterations

The potential alteration which could lead to a significant impact on the ecosystem is the creation of depressions in the land surface. Effects which are long term and large in areal extent may result from induced changes in waterflow regimes. These effects, of course, can occur only if buggies or other surface vehicles are used. As discussed above, the total area (and thus, the kinds and numbers of consumers) affected is site specific.

<u>Site access by leveed road.</u>

1. Activity sequence

Surveyors enter the marsh by marsh buggy, by foot, or by truck (on firm soils), stake the route, and leave the area. The staked route may or may not be the most direct pathway to the wellsite location. A dragline with board mats enters the site to excavate a continuous

borrow pit and place the spoil to form a long continuous levee. The dragline proceeds along the marsh surface on that side of the levee from which the fill is borrowed and parallel to the levee route. The fill is placed in a continuous pile 10 to 13 m (30 to 40 ft) wide with an approximate slope of 30°. Three to 4 m (about 10 ft) usually remains as a berm, that distance between the foot of the levee and the edge of the borrow pit. The dragline shapes the material only approximately and then leaves it to drain and dry. A board road is placed on the top of the levee after synthetic material is laid to control water seepage. The dragline may exit by traveling on board mats, or if the roadway is completed, may be loaded on a large equipment-moving vehicle.

2. Primary ecological alterations

2.1 Creation of ruts or depressions in land surface - marsh buggy tracks and/or tracks from other accessory equipment

2.2 Loss of vegetation along road pathway due to excavation and covering

2.3 Creation of borrow ditch 2 to 5 m (6 to 15 ft) deep for increased saltwater inundation

2.4 Increases in concentrations of suspended sediments and dissolved nutrients

2.5 Blockage of normal surface-water runoff pathways by levee

2.6 Creation of a pathway parallel to levee for more rapid upland drainage and standing water from marsh

3. Attribute alterations

Surveyors and their equipment trample and crush vegetation outside the zone to be excavated, but the area involved is small. Furthermore, much of this trampled area may be covered by fill as construction proceeds. A more significant vegetation loss occurs during excavation of a 5-m (15-ft) wide borrow ditch and burial of some bordering marsh by fill. The width of the latter zone is 10 to 13 m (30 to 40 ft). This direct loss results in an immediate decrease in food and cover for the consumers in the area. For a single roadway through a salt marsh, the total area affected is usually small in comparison to the remaining productive vegetation; the impacts on animals, nitrogen fixation, and detritus export are minor. However,

as additional new canals and wellsites are excavated, the carrying capacity of the intact salt marsh is decreased. Cummulative effects are unknown, and the threshold point (where one additional well will significantly affect the marsh) is obscure.

Marsh buggy tracks (from surveyor or construction vehicles used in levee-road construction) affect land elevation, creating pathways for increased saltwater inundation and/or freshwater drainage. The depth and number of ruts created by marsh buggies are dependent upon the number of vehicles used and the degree to which they retrace existing paths. In areas that are submerged frequently, the depressions are less likely to significantly alter water movement patterns. Hence, confinement of marsh buggy traffic to a narrow corridor in areas near the water's edge may be wise. However, in areas further removed from the estuary, deep ruts resulting from retraced trails would form depressions for the movement of water and, if deep enough, may result in standing bodies of water. The orientation and depth of the depressions determine whether they (1) remain for long time periods and (2) increase or decrease the frequency of inundation of a given area of land. Areas dominated by saltgrass or shore grass may be replaced by stands of smooth cordgrass when the frequency and/or duration of inundation increases. The converse may occur when frequency and/or duration of inundation decreases. The total area affected is site specific and could range from insignificant to highly significant when compared to the total area of salt marsh. Consumers that depend upon smooth cordgrass and its epiphytes for food and/or cover may ultimately increase or decrease.

The roadway levee blocks normal runoff (on one side of the borrow ditch); the consequences are site specific and may range from imperceptible to dire. The borrow ditch intercepts small tidal streams; thus a faster, more direct runoff pattern is substituted for a slow, trickling, dendritic pattern. The ditch also allows an increase in the frequency of inundation. In the area of influence the long-term result will be a greater rate of runoff (decrease in freshwater influences) and an increased frequency of inundation (increase in saltwater influences). Thus, salinity levels will rise in the soil and standing water bodies and vegetation changes will reflect this increase. Nutrient levels may increase over a long time period due to intrusion of nutrient-rich saline waters. On the other hand, if the borrow ditches function more to hasten drainage than to allow intrusion of saline water, a net loss of nutrients may occur (Copeland and Dickens, 1974).

The velocity of the water will increase in both directions along these newly created routes. In the borrow ditch, net export of detritus to the estuary would decrease for two reasons: (1) excavation of the borrow has removed the vegetation and (2) the continuous roadway levee interrupts existing small tidal streams which carry the detritus toward the estuary. In marsh buggy depressions, however, export of detritus may be enhanced by creation of these larger

artificial tidal outlets. The significance of this increase is dependent upon the orientation, density, and length of buggy tracks.

Increases in suspended sediments associated with excavation are transient and affect a relatively small area. Long-term effects are results of erosion of the borrow ditch and the roadway levee. Erosion of the latter will proceed until it becomes vegetated by pioneering plant groups. This ecesis will usually occur within two yr or less, depending upon the edaphic conditions and sources of seed stock. Increases in suspended sediment associated with marsh buggy traffic also have short-term and long-term components; effects of both components are usually less than effects associated with borrow ditches and roadway levees.

Replacement of stands of marsh vegetation by bodies of deeper water (borrow ditch and buggy tracks) results in conversion from salt marsh or tidal channel to a deeper aquatic system, with attendant changes in the community. Marsh grass and epiphytes decrease while algae become more prevalent. Corliss and Trent (1971) compared phytoplankton production in natural and altered areas on the Texas coast. They found that net primary production of algae in canals was higher than in bay and marsh channels. Other studies (Darnell, 1976) have noted decreased net production of organic material when all primary producers are considered.

There may be decreases or increases in numbers of consumers in canals (Bourn and Cottam, 1950; Willingham et al., 1975; Adkins and Bowman, 1976), though measures of standing biomass have generally shown a decrease (Trent et al., 1972). Shifts in relative species abundance are evident along with changes in absolute numbers as the area is altered in character from marsh to a deeper water body (Lindall et al., 1973; Dale, 1975; Adkins and Bowman, 1976).

With a shift in primary producer type, consumers dependent upon phytoplankton may increase in the affected area. Those dependent upon epiphytes and marsh grasses will decline. It is difficult to predict which groups of consumers increase or decrease because many of them use organic matter for food from a variety of sources in the marsh. Consumers further along the food chain, such as wading birds, may increase or decrease depending upon disturbance factors and the sorts of consumer species available for food. The areal increase of new aquatic habitat is usually less than the area affected by levee construction plus marsh buggy traffic. Turbidity that results from chronic erosion decreases the suitability of the standing water as habitat for phytoplankton, aquatic invertebrates, and fishes.

Disturbance factors should be recognized as an important consideration because they extend the effects of the project beyond the boundaries of the immediate site.

4. Key attribute alterations

Key attribute alterations induced by this phase of oil and gas operations involve changes in land elevations. Borrow ditches and marsh buggy tracks allow an increase in frequency and area of inundation by salt water. First-order effects include removal of vegetation and creation of a standing-water habitat. If the increased salt-water flows are not confined by topographic features or other means, large areas of marsh may be affected. Long-term changes in vegetation and consumer groups would occur. Long-term turbidity increases would also result.

Levee construction inherently results in higher land elevations. Burial of flora is less significant than possible alterations of waterflow regimes. Poorly planned placement of the roadway may result in blockage of existing tidal inundation and/or runoff patterns. These blockages will lead to long-standing changes in types and/or amounts of vegetative cover, followed by corresponding changes in consumer composition.

Site access by canal and wellsite dredging.

1. Activity sequence

Surveyors enter the marsh by marsh buggy or foot, stake the wellsite location and access route, and leave the area. The pathway may or may not be the most direct one possible. Usually there is no need to clear vegetation, but vegetation may be trampled and crushed in adjacent zones.

Site location, equipment availability, spoil placement requirements, and economic factors may dictate which type and size of dredge is used in each phase of the excavation. If entry is from bayside to the marsh, a barge-mounted bucket dredge or a hydraulic dredge is used to cut the channel to the marsh edge. Spoil is placed on both sides of the channel and is usually submergent. Maintenance dredging may eventually lead to subaerial spoil levees or "islands."

Once the dredge reaches the marsh proper, the spoil levees will be subaerial. If the marsh soils are firm enough to support the weight, a buggy-mounted or track-mounted bucket dredge may be utilized. Canal depths must be about 3 m (8-10 ft); typical widths approach 23 m (70 ft); a 10-m (30-ft) berm typically exists between the canal edge and the inside foot of the continuous levee (both sides of the canal).

Small vessels, crew boats, supply boats, and tugs may move to the dredging site daily. Alternatively, marsh buggies may be used for such functions. After the wellsite location is dredged (usually 50 by 115 m or 150 by 350 ft), all equipment moves out of the area. Redredging may be necessary once every six months to once every five yr.

2. Primary ecological alterations

2.1 Creation of ruts or depressions in land surface (marsh buggy tracks)

2.2 Loss of vegetation along canal route due to excavation and covering by spoil during initial dredging and maintenance

2.3 Creation of pathway about 3 m (8-10 ft) deep for increased saltwater inundation

2.4 Increases in concentrations of suspended sediments and dissolved nutrients

2.5 Blockage of normal surface-water runoff pathways

3. Attribute alterations

Surveyors and their equipment trample and crush vegetation outside the zone to be excavated, but the area involved is small. Furthermore, much of this trampled area may be covered by spoil as the dredging proceeds. A more significant vegetation loss occurs during excavation of a 23-m (70-ft) wide canal and a 0.58-ha (1.2-acre) wellsite and burial of a considerable portion of bordering marsh by spoil. The area of the latter zone is dependent upon the type of spoil disposal technique, but the total area of marsh affected may be as much as five times the width of the canal itself. This direct loss results in an immediate decrease in food and cover for the consumers in the area. For a single canal through a salt marsh, the total area affected may be small in comparison to the remaining productive vegetation, and the impacts on animals, nitrogen fixation, and detritus export can be minor. Relative effects depend on the size of salt marsh; as each new canal and wellsite is excavated, the carrying capacity of the intact salt marsh is decreased. Cumulative effects are unknown, and the threshold point (where one additional well will significantly affect the marsh) is obscure.

Marsh buggy tracks affect land elevation and create pathways for increased saltwater inundation. The depth and number of ruts created by marsh buggies is dependent upon the number of vehicles used and the degree to which they retrace existing paths. In areas that are submerged daily, the depressions are less likely to significantly alter water-movement patterns. Hence, confinement of marsh buggy traffic to a narrow corridor in areas near the estuary may be wise. However, in areas further removed from the water's edge, deep ruts resulting from retraced trails would form depressions for the movement of water and, if deep enough, may result in standing bodies of water after the tide has receded. The orientation and depth of the depressions determine whether they (1) remain for long time periods and (2) increase or decrease the frequency of inundation of a given area of land. Areas dominated by saltgrass or shore grass may be replaced by stands of smooth cord-grass when the frequency and/or duration of inundation increases. The converse may occur when frequency and/or duration of inundation decreases. The total area affected is site specific and could range from insignificant to highly significant when compared to the total area of salt marsh. Consumers that depend upon smooth cordgrass and its epiphytes for food and/or cover may ultimately increase or decrease. The amount of detritus exported to the adjacent estuarine system is directly proportional to the standing crop of smooth cordgrass.

Beyond the impacts of direct spoil placement on the marsh and creation of deep (three-m) aquatic ecosystems, the canal also creates a large route for increased saltwater inundation (Bourn and Cottam, 1950; Gagliano, 1973; Copeland and Dickens, 1974; Darnell, 1976). The pattern and height of spoil placement are the most important factors that determine whether the daily tides are contained within a localized zone or whether they may inundate extensive areas. Thus, the total area affected is site specific and could range from the site alone to a large proportion of the marsh area, depending upon topography and tidal hydraulics.

Water flow in the canal may change depending upon canal location and area within the canal system. In the straight sections of the canal, within the ralm of tidal influence, there is an increase in the volume of water exchange (Gagliano, 1973). There may be an acceleration of freshwater runoff from the marsh (Copeland and Dickens, 1974; Darnell, 1976). This can result in a lowering of the water table and a drying of higher marsh areas.

On the other hand, the spoil placement may so block the natural marsh drainage that the marsh area is effectively impounded. In some instances the plants may be exposed to increased salinities and acid conditions. In other instances the impounded marsh area may have a lowered salinity regime and contain plant characteristics of brackish and fresh marshes (Conner et al., 1976).

Further away from tidal influence, conditions in the canal may be quite variable, and at times anoxic (Smith, 1970; Adkins and Bowman, 1976; Darnell, 1976). There may be a buildup of organic matter because of the high proportion of organic sediment, limited aeration of the water column, and poor flushing similar to residential dead-end canal problems (Adkins and Bowman, 1976). Darnell (1976) noted possible buildups of sulfates in these canals, but the work of Adkins and Bowman (1976) showed no systematic increase in canal sulfates compared to control areas. The canals, however, may have more variable conditions than do control areas.

If the result of the canal construction is more marsh flooding, the salinity of the soil and water will increase. This may lead to changes in plant composition and increased nutrients over a long time period.

The net export of detritus to the open waters of the bay system would likely decrease for two reasons: (1) excavation of the channel has removed vegetation and (2) the continuous spoil banks interrupt existing small tidal streams that carry detritus out of the marsh.

Increases in suspended sediments associated with excavation or maintenance are transient and affect a relatively small area, especially if temporary plugs are placed at the mouth of the canal. Long-term effects are results of erosion of canal banks and spoil deposits; erosion of the former is proportional to the speed and amount of boat traffic. Erosion of spoil deposits will proceed until they become vegetated by pioneering plant groups. This ecesis will usually occur within two yr or less, depending upon the edaphic conditions and sources of seed stock. Increases in suspended sediment associated with marsh buggy traffic also have short-term and long-term components; effects of both components are usually less than effects associated with canal erosion.

Replacement of stands of marsh vegetation by bodies of open water (canals) results in conversion from salt marsh or tidal channel to a deeper aquatic system, with attendant changes in the community. Marsh grass and epiphytes decrease while algae become the prevalent producers. Corliss and Trent (1971), comparing phytoplankton production in natural and altered areas, found that net primary production of algae in canals was higher than in bay and marsh channels. Other studies (Darnell, 1976) have noted decreased net production or organic material when all primary producers are considered.

There may be decreases or increases in numbers of consumers in canals (Bourn and Cottam, 1950; Willingham et al., 1975; Adkins and Bowman, 1976), though measures of standing biomass have generally shown a decrease (Trent et al., 1972). Shifts in relative species

abundance are evident along with changes in absolute numbers as the area is altered in character from marsh to a deeper water body (Lindall et al., 1973; Dale, 1975; Adkins and Bowman, 1976).

With a shift in primary producer type, consumers dependent upon phytoplankton may increase in the affected area. Those dependent upon epiphytes and marsh grasses will decline. Consumers further along the food chain such as wading birds may increase or decrease depending upon disturbance factors and the sorts of consumer species available for food.

Disturbance factors should be recognized as an important consideration because they extend the effects of the project beyond the boundaries of the immediate site.

4. Key attribute alterations

Key attribute alterations induced by this phase of oil and gas operations involve changes in land elevations. Canals increase the frequency and area of inundation by salt water. They may increase the volume of water exchange, accelerate freshwater runoff, and hasten the drying of high marsh areas. In dead-end canals far removed from tidal influence, anoxic conditions may develop. Depending upon spoil bank configuration, tidally flushed salt marsh may become impounded and may change character considerably.

First-order effects include removal of vegetation and creation of a standing water habitat. If the saltwater flows are not confined by spoil and/or natural topographic features, much larger areas of marsh may be affected. Long-term changes in vegetation and consumer groups would occur. Long-term turbidity increases would also result.

Canal construction requires spoil placement. In salt marshes this usually results in higher land elevations. Burial of flora may be an immediate alteration. Even more significant, however, may be the possible alterations of waterflow regimes. Poorly planned placement of spoil may result in blockage of existing tidal inundation and/or runoff patterns. These blockages will lead to long-standing changes in types and/or amounts of vegetative cover, followed by appropriate changes in consumers.

<u>Wellsite preparation and operation for leveed marsh-floor locations.</u>

1. Activity sequence

The equipment and techniques utilized during construction of the access road are also employed during preparation of the wellsite.

After surveyors have staked the area, the dragline constructs a ring levee around the entire site by utilizing borrow from pits located exterior to the levee. Outside dimensions of the levee are usually less than 120 by 120 m (400 by 400 ft). Initial levee height is about two m (six ft); shrinkage occurs through time. A sump ditch is excavated immediately inside and parallel to the entire levee. A board foundation similar to that laid for the access road is placed over the wellsite area. Internal earthworks are constructed and shaped by various pieces of equipment, and the pad site is surfaced in a manner similar to that used for the access road. A variety of auxiliary equipment and materials is moved to and stored in the area prior to arrival of heavy drilling equipment. Drilling activities require one to three months. Test results indicate whether the well should be put into production or capped and shut down.

Equivalent activities occur at a dredged location. The wellsite, or keyway, has been previously dredged to dimensions of approximately 47 by 133 m (140 by 400 ft). Drilling and auxiliary equipment and supplies are transported and stored on barges. A specialized barge is employed for drilling. Its ballast tanks are flooded, it settles to the bottom, and piles are driven to anchor it firmly in place. Impacts are primarily due to the increased turbidity and noise associated with traffic and drilling. These effects were discussed in an earlier section of this report (site access by canal and wellsite dredging) and will not be considered further.

2. Primary ecological alterations

2.1 Complete vegetation removal inside the ring levee and in borrow pits outside the ring levee

2.2 Increases in concentrations of suspended sediments and nutrients

2.3 Creation of pits and a ring levee which alter water flows in localized areas

2.4 Introduction of toxic materials to water and soil systems

2.5 Extended displacement of wildlife from entire area adjacent to roadway, access canal, and wellsite

3. Attribute alterations

Construction of the wellsite is usually an extension of construction of the access road; the dragline merely continues operating, excavating

disjunct borrow pits to build the ring levee. This work and the auxiliary preparation of the wellsite interior removes vegetation and associated insects, periwinkles, and meiofauna from a maximum of 1.4 ha or 3.5 acres. This removal represents a loss of food and cover for all the remaining consumer groups - waterfowl, wading and shorebirds, mammals, aquatic invertebrates, and fish.

Short-term increases in suspended sediments and nutrients result from construction activities. Longer term increases resulting from erosion of the ring levee are of minor consequence since vegetation usually develops in a year or less to control the erosion. Neither the short-term nor the long-term erosion effects from the ring levee have a large impact on the surrounding marsh unless conditions are such that the turbidity spreads over a wide area.

The ring levee may influence water flows by isolating/filling depressions or blocking small drainages. The effects are usually localized and insignificant when compared to (1) the remaining unaffected marsh and (2) the effects of road construction. The exterior borrow pits (depressions in land elevation, input 18), can affect a larger area of marsh than the ring levee. The zone(s) affected depends upon the placement pattern, depth, and surface area of these pits. They may remain as isolated ponds of standing water which collect runoff via intercepted drainage ditches, or these pits could become interconnected due to drainage channels and/or consumer use (compaction of pathways between ponds). The drying effect of this increased drainage may or may not lead to vegetation changes in adjacent lands. The total area affected is relatively small, and the frequency of inundation is not affected. Hence, impacts on the functioning of the ecosystem are insignificant.

Replacement of marsh vegetation by bodies of standing water in borrow pits results in changes in the biotic communities. The area is converted from a salt marsh or tidal channel with frequent tidal flux to a marsh isolated from tidal action, or to a deeper aquatic system. Smooth cordgrass (Spartina alterniflora) and epiphytes may die and be replaced by species such as Spartina patens and Eleocharis. This would be indicative of a change of the impounded salt marsh to brackish marsh. If the system were dominated by standing water, the marsh plants and epiphytes would likely be replaced by phytoplankton. While net algal primary production might increase (Corliss and Trent, 1971), net production of organic material from all sources would likely decrease (Darnell, 1976).

With the shift in ecosystem type resulting from impounding or digging pits, the consumers will change. Generally there is a decrease in overall standing biomass of consumers when marshes are converted to canals (Trent et al., 1972). In the case of an impounded wellsite, it is expected that consumer abundance would greatly decrease, owing to the use of the inside of the impoundment and pits

for oil and gas activities. If the area were not intensively used or were left abandoned, some consumer populations might develop from the few hearty species that remained. There would be limited opportunity for movement into the impounded area by aquatic species, though high waters from storms and transport via birds could allow population establishment. Consumer groups likely to develop include meiofauna, zooplankton and small crustaceans especially adapted for feeding on phytoplankton, and small fishes such as cyprinodonts. In some instances the wind protection afforded by the levee banks would allow the water to be clear and productive. In this instance the impounded area could be very attractive to waterfowl, raccoons, and wading shorebirds. In other cases, however, especially where the area is intensively used, the impounded wellsite might offer little attractive habitat.

In all cases it is likely that the ecosystem created is less productive than the original marsh it replaced.

During this phase of operations (one to three months), the water and soil systems are exposed to a wide variety of pollutants from drilling mud, sump discharge, and vehicle and equipment waste (exhausts, oil, grease, gasoline). The kinds and amounts of these materials, and hence their effects, are site specific. Consequences are difficult to predict due to the large number of site specific variables involved. Spills and cleanup operations are treated in a later section of this report.

Displacement due to activity and noise during construction is short term since the operation takes only 10 to 14 days. However, subsequent activities, drilling and production, may continue for months and years, and the area affected extends considerably beyond the leveed site and borrow pits.

4. Key attribute alterations

The key attribute alterations include direct removal of vegetation and consumers, localized changes in land elevation, and introduction of pollutants. Since the area affected by excavation is small (relative to the pristine marsh), the loss of food and cover for supported consumers is insignificant. The changes in land elevations can influence waterflow regimes, but the total area affected is usually minor in comparison to the undisturbed marsh. The extent of impacts from pollutants is not predictable. Chronic effects of persistent toxins are more important than the acute effects, which are confined to a much smaller area.

Installation and maintenance of lines.

1. Activity sequence

Lines associated with gas and oil activity may be separated into three groups - supply lines, flowlines, and transportation lines. The activity levels necessary for their placement range from minor to major.

Water, gas, and other lines bringing supplies to the wellsite are usually laid on the surface, typically parallel to an access road or access canal. If a line route does not parallel wellsite access routes, a survey crew must enter the marsh by foot or marsh buggy and stake the pathway. Trucks or barges supply the pipe; if the route crosses unmodified marsh, a marsh buggy will be used to carry pipe. The lines are small and are usually connected and placed by hand.

Flowlines span the distance between the wellhead and the production facilities, usually less than five km (three mi). If an access road has been constructed through the marsh, the flowlines will be placed on the levee or the adjacent marsh surface. In dredged locations, flowlines are placed on the marsh surface or supported slightly above the surface. Marsh buggies are used to stake and clear the route. When crossing canals, flowlines are buried deep enough to avoid problems with maintenance dredging; draglines or jetting barges are necessary for this procedure. Crossing nonnavigable canals often requires the driving of piles for pipe supports.

Long-distance transportation of well products is accomplished by large buried pipelines which vary from 20 to 150 cm (8 to 60 inches) in diameter. Pipeline locations must be surveyed and staked. Since pathways tend toward straight-line orientations between facilities, they must span existing surface features. Dredges and draglines are most frequently used in crossing a salt marsh; marsh buggies are employed as auxiliary equipment. The push method requires a specialized barge (located in a dredged slip) to assemble and push the pipeline into a canal; the pipe is supported on floats and guided by a marsh buggy. A dragline is used to excavate this straight canal 1 to 2 m (4 to 6 ft) deep and about 3 m (8-10 ft) wide. Spoil may be placed on one or both sides of the canal. The area affected is about 10 m (30 ft) wide for small lines (20-cm, or 8-inch, diameter); wider areas are disturbed for larger pipes. In some cases the marsh vegetation and upper soil layers can be separated from the lower portions of the substrate during excavation. After the pipeline is in place and the canal refilled, the upper soil and vegetation is replaced. This "double ditching" technique facilitates revegetation of the disturbed area. In some instances the pipeline canal is not

backfilled. This results in one or two small continuous spoil levees alongside the canal. When small watercourses are crossed with this open-canal method, earthen plugs are placed to prevent water flow down the canal. The pipeline is usually buried under large watercourses (canals, streams, rivers); this burial necessitates additional dredging or jetting activities. Bulkheading or riprap is placed at the crossing to prevent erosion; pilings are often necessary.

If the situation does not allow the push method to be used, the flotation method is employed. This procedure involves dredging a large canal to accommodate the pipelaying barge. The canal is typically 12 to 15 m (40 to 50 ft) wide and 2 to 3 m (6 to 9 ft) deep; hydraulic or bucket dredges are used. A narrower, deeper ditch is dredged within the wide canal for the actual pipeline placement. Since it is rare to backfill such a large canal, gaps approximately every 150 m (450 ft) are left between spoil banks for water circulation. Such spoil deposits are typically 1 to 2 m (3 to 6 ft) high and 15 to 30 m (50 to 85 ft) wide with a 10 to 15-m (30 to 50-ft) berm. The barge travels the length of the canal, assembling and laying th epipe. Plugs are also used in this method to prevent erosion, saltwater intrusion, or other major alterations to marsh drainage patterns.

Once they are pressure checked, installed, and operating, all pipelines are periodically inspected for leaks; boats, marsh buggies, or aircraft may be employed. The equipment used and frequency of traffic depends on the kind of pipeline, the size of pipeline, and the marsh conditions.

2. Primary ecological alterations

2.1 Trampling and crushing of vegetation along pipeline path

2.2 Temporary and permanent loss of consumers

2.3 Loss of vegetation in canal zone, 10 to 100 m (30 to 300 ft) wide

2.4 Increases in concentrations of suspended sediments and dissolved nutrients

2.5 Creation of pathways for increased saltwater inundation (buggy tracks and/or backfilled canals)

2.6 Creation of pathways for increased rate of flow of runoff (buggy tracks and/or backfilled canals)

2.7 Blockage or alteration of existing tidal drainage pattern

2.8 Change in frequency of inundation in localized areas (buggy tracks and/or backfilled canals)

3. Attribute alterations

The alterations associated with line installation and maintenance in a salt marsh vary widely and depend primarily upon the type and size of pipeline.

Supply lines and flowlines laid on or parallel to an access road or canal generally have less impact than those traversing unaltered marsh. The movement of work crews and marsh buggies over the land surface tramples and crushes vegetation. Depending upon the soil moisture conditions, the vegetation may be completely uprooted and destroyed in some areas. This results in an immediate decrease in food and cover for the consumers in the area. The total area thus affected is usually small in comparison to the remaining area of productive vegetation, and the effects on animals, nitrogen fixation, and detritus export are insignificant.

The depth and number of ruts created by marsh buggies is dependent upon the number of vehicles and the degree to which they retrace existing tracks. In areas that are submerged daily, the depressions are less likely to significantly alter water-movement patterns. Hence, in areas near the estuary, confinement of marsh buggy traffic to a narrow corridor may be wise. However, in areas further removed from the estuary, deep ruts resulting from retraced trails would form a depression for the movement of water and, if deep enough, may result in standing bodies of water after the tide has receded. The orientation and depth of the depressions determine whether they (1) remain for long periods of time and (2) increase or decrease the frequency of inundation of a given area of land. Areas dominated by saltgrass or shore grass may be replaced by stands of smooth cordgrass when the frequency and/or duration of inundation increases. The converse may occur when frequency and/or duration of inundation decreases. The total area affected is site specific and could range from insignificant to highly significant when compared to the total area of salt marsh. Consumers that depend upon smooth cordgrass and its epiphytes for food and/or cover may ultimately increase or decrease.

The amount of detritus exported to the adjacent estuarine system is directly proportional to the standing crop of smooth cordgrass. If the affected area is close to the estuary, the frequency of inundation and detritus export may remain unchanged. However, the depressions allow faster movement of water in both directions. This results in an increase of turbidity and a decrease in the efficiency of the detritus-filtering mechanism of the salt marsh. Thus, a net increase of exported detritus could result. Net amounts of nutrients and sediment probably would not change significantly.

If the affected area is further removed from the estuary where isolated ponds may exist, intramarsh circulation could be affected. Depressions could connect individual water bodies and increase the intermixing of their contents. Waterfowl and wading bird use would be expected to increase in these new depressions with standing water. At the ecosystem level, however, this increase is slight. A relatively small amount of dredging may be required when small lines cross existing watercourses. The increased concentrations of nutrients and sediments are of short duration and involve small areas.

The immediate alterations resulting from dredging pipeline canals are similar to those associated with dredging access canals or constructing access roads. The long-term effects may differ, however, because of backfilling and plugging practices. During the staking of pipeline canal routes, surveyors and their equipment trample and crush vegetation outside the zone to be excavated, but the area involved is small. Furthermore, much of this trampled area may be covered by spoil as the dredging proceeds. A more significant vegetation loss occurs during excavation of the canal and burial of bordering marsh by spoil. The area of the latter zone is dependent upon the type of spoil disposal technique. This direct loss results in an immediate decrease in food and cover for the consumers in the area. The total area affected is usually small in comparison to the remaining productive vegetation, and impacts on animals, nitrogen fixation, and detritus export are minor. However, as each new canal is excavated, the carrying capacity of the intact salt marsh is decreased. Cumulative effects are unknown, and the threshold point (where one additional canal will significantly affect the marsh) is obscure.

Increases in suspended sediments associated with excavation are transient and affect a relatively small area, especially if plugs are placed at the mouth of the canal. Long-term effects are results of erosion of canal banks and spoil deposits. Erosion of the latter will proceed until they become vegetated by pioneering plant groups. This ecesis will usually occur within two yr or less, depending upon the edaphic conditions and sources of seed stock. Increases in suspended sediment associated with auxiliary marsh buggy traffic also have short-term and long-term components.

Canals that are adequately plugged and/or backfilled may have localized effects on drainage patterns, but they will not result in long continuous pathways for increased saltwater inundation or increased drainage. Open canals with accompanying levees will block or divert water flows. Incompletely backfilled canals can result in long straight depressions due to shrinkage and subsequent subsidence of excavated spoil. The depression may enhance the export of detritus and may allow increased saltwater inundation. The total area affected and the significance of changes effected by blockage and enhancement of water flows is site specific; these aspects were discussed in preceding paragraphs concerning depressions resulting from marsh buggy traffic.

Replacement of stands of marsh vegetation by bodies of standing water (open pipeline canals and buggy tracks) results in increases of phytoplankton. The area is converted from a salt marsh or tidal channel to a deeper aquatic system. Smooth cordgrass and epiphytes are removed and phytoplankton increase in the deeper water areas. Corliss and Trent (1971) compared phytoplankton production in natural and altered areas and found increased net algal primary production. However when all producers are considered, net production of organic material decreases in altered areas compared to the marsh (Darnell, 1976).

There may be decreases or increases in numbers of consumers in canals (Adkins and Bowman, 1976; Bourn and Cottam, 1950; Willingham et al., 1975), though measures of standing biomass have generally shown a decrease (Trent et al., 1972). Shifts in relative species abundance are evident along with changes in absolute numbers with the creation of a deeper water body (Lindall et al., 1973; Dale, 1975; Adkins and Bowman, 1976).

Since phytoplankton become the prevalent primary producers, consumers dependent on phytoplankton in the affected area may increase relative to other consumers. It is difficult, however, to predict which groups of consumers increase or decrease because many of them use organic material for food from a variety of sources in the marsh. The kinds and numbers of organisms existing in the isolated, sometimes nonflowing, water bodies is dependent upon the frequency, timing, and amount of tidal inundation in the pipeline canal. Adkins and Bowman (1976) measured abundance of nekton and zooplankton in marsh control areas (one meter deep), canals open at both ends, canals open at one end, and canals closed at both ends. Taken as a whole, control areas and open canals were more favorable habitat for nekton; semiclosed and closed canals had fewer organisms. However, closed canals generally contained the largest organisms. There were individual exceptions, particularly regarding shrimp. Willingham et al. (1975) found a similar pattern regarding consumer species. It is difficult to form conclusions regarding zooplankton due to sampling problems and flooding. It is apparent that zooplankton populations are quite variable in all canal types.

Consumers further along the food chain may increase or decrease depending upon the sorts of consumer species available for food. Turbidity that results from chronic erosion decreases the suitability of the standing water as habitat for phytoplankton, aquatic invertebrates, and fishes.

Disturbance factors should be recognized as an important consideration because they extend the effects of the project beyond the boundaries of the immediate site.

4. Key attribute alterations

Key attribute alterations induced by this phase of oil and gas operations involve changes in land elevations. Depressions (canals and marsh buggy tracks) may increase the frequency and area of inundation by salt water. First-order effects include removal of vegetation and creation of a standing-water habitat. If the salt water is not confined by spoil and/or natural topographic features, much larger areas of marsh may be affected. Long-term changes in vegetation and consumer groups would occur. Long-term turbidity increases would also result.

Canal construction requires spoil placement; in salt marshes this usually results in higher land elevations. Burial of flora is less significant than possible alterations of waterflow regimes. Poorly planned placement of spoil may result in blockage of existing tidal inundation and/or runoff patterns. These blockages will lead to longstanding changes in types and/or amounts of vegetative cover, followed by appropriate changes in consumers.

<u>Placement and operation of production facilities.</u>

1. Activity sequence

The conversion of a newly drilled well to production status involves the placement of a small amount of equipment at the wellsite. In addition, brine-disposal lines and flowlines are necessary to transport the products to a centralized production facility, where numerous pieces of equipment handle the products of all wells in the area. The installation and maintenance of lines was discussed in the preceding section.

Production equipment necessary at the wellhead varies with the type, quality, and quantity of products. Some sort of pump is usually required, especially as an oil well ages. Other units which may be necessary include knockout tanks, heater-treaters, dehydrators, and

containers for storage of chemicals. Installation and operation of this equipment requires activities similar to those of wellsite preparation, only on a smaller scale. At dredged location sites the equipment is typically mounted on pile-foundation platforms or barges. Construction of platforms requires a small amount of pile driving and traffic. The extent of the activities depends on the amount and permanence of equipment. All materials are transported by boat or barge. A special slip may be dredged if equipment is to be mounted on a barge. At wellheads on leveed or boarded pads, the placement and operation of equipment is merely an extension of activities necessary for wellsite preparation. Clearing, leveeing, and/or boarding of an additional area is usually not necessary. If it is required, the area involved is quite small. Materials are transported by trucks over the existing roads.

Flowlines connect wellsite equipment with the centralized production site, which is typically located on more firm soils (upland areas if they are relatively close). If the centralized production facility must be located in the salt marsh, it may be placed on a pile-foundation platform, barges, a leveed site, or a combination of these. The equipment located at this centralized facility usually includes brine treatment apparatus, skimmers, heater-treaters, dehydrators, other separators, chemical tanks, filters, pumps, compressors, and large storage tanks. The area occupied by these units is typically less than 0.4 ha (1 acre). Construction activities vary with the location and are similar to those for site preparation (discussed in an earlier phase of this section).

Once production has commenced, periodic checking and adjusting occurs to control flows, changes in quality and quantity of products, and transfer of the products to large transportation pipelines. Equipment is maintained and replaced as it deteriorates; corrosion is exacerbated by the climatic conditions of the salt marsh. Vegetation around production facilities may be controlled by cutting, herbicides, or other means. As production continues through the years, additional equipment for treatment becomes necessary due to the increased amount of water mixed with the oil and gas.

2. Primary ecological alterations

2.1 Trampling and crushing of vegetation

2.2 Temporary and permanent displacement of consumers

2.3 Loss of vegetation and consumers in centralized production facility (0.4 ha, 1 acre)

2.4 Increases in concentrations of suspended sediments and dissolved nutrients

2.5 Introduction of toxic materials to water and soil systems

3. Attribute alterations

The attribute alterations which occur during placement and operation of production facilities are primarily dependent on the location of the facilities. The alterations are similar in scope, but smaller in scale, than those associated with wellsite preparation and operation. Alterations due to placement and operation of units at wellheads are relatively minor and are very similar to those at the centralized production facilities. Therefore, they will not be considered further.

Vegetation is trampled and perhaps removed in a small area during installation of the centralized production facility. Insects, periwinkles, and meiofauna are also eliminated in this 0.4-ha (1-acre) zone. This removal represents a loss of food and cover for all the remaining consumer groups - waterfowl, wading and shorebirds, mammals, aquatic invertebrates, and fish. However, these losses are insignificant at the ecosystem level.

Short-term increases in suspended sediments and nutrients result from construction activities.

Although care is taken to avoid large-scale spills at the centralized facility (specialized drain structures on platform floors, dikes, checking and maintaining equipment), small amounts of toxic materials are released to the water and soil systems over a long time period. These materials may include oil, gas, grease, gasoline, exhausts, herbicides, and a variety of other chemicals used in the operation of equipment. If brine is discharged into an area of moving salt water, little or no effects are expected. The particular kinds and amounts of these substances, and hence their effects, are site specific. Consequences may involve vegetation and/or consumers over a long period of time, and could therefore range from insignificant to highly significant. Major spills and cleanup operations are treated in a later phase of this section.

The constant traffic necessary for monitoring, maintaining, and adjusting the units at the wellhead and the centralized facility causes an increase in water turbidity, especially when boats are used in canals. The extent of this effect on primary production and the benthos is directly proportional to traffic flow.

Disturbance factors should be recognized as an important consideration because they extend the effects of the project beyond the boundaries of the immediate site.

4. Key attribute alterations

The key attribute alterations include direct removal of vegetation and consumers and introduction of pollutants. Since the area affected by construction is small (relative to an expansive marsh), the loss of food and cover for supported consumers is insignificant. The extent of impacts from pollutants is not predictable.

Because the persistence and potency of spilled components is highly variable, the extent of impacts from pollutants is not predictable. Since the effects of sublethal levels of persistent pollutants are not catastrophic (as is the case in a blowout or major spill), the toxins may permeate large numbers of individuals and species before damage is noticed. By this time, affected organisms and waterflows will have served as agents of dispersal, with the result that areas much larger than the wellsite may be affected.

Spills and cleanup.

1. Activity sequence

Spills and leaks are the result of equipment failure, improper operation of equipment, or human error. In spite of automatic devices to control and shut down some equipment during failure, leaks and spills do occur. Although many kinds of materials may be spilled during oil and gas operations, most of the specific discussion in this section assumes the spillage of crude oil. When spills do occur, first efforts should be directed towards containment/confinement of the petroleum. That the source of the problem should be discovered and repaired is obvious. The equipment and methodology utilized is dependent upon the size of the spill, the kind of material spilled, the biotic and abiotic characteristics of the affected and adjacent area, and other site-specific features.

The presence of a large amount of water on the surface of the salt marsh ecosystem is a confounding factor in spills and cleanup. Buoyant petroleum materials spread rapidly into thin films, and the movement of the underlying water may further dissipate the spill. Booms, dikes, dams, straw, and other physical means are frequently used to contain the petroleum. Boats, trucks, barges, helicopters, and marsh buggies may be necessary for placement of these barriers. Once containment has been accomplished, piston film herders or physical means may be used to concentrate the oil. Skimmers or

other devices may be employed at this point. The remaining petroleum may later be burned, or the vegetation may be cut and removed from the area. Additional vehicular traffic and manpower is necessary for all these activities.

2. Primary ecological alterations

2.1 Introduction of toxic materials to water and soil systems

2.2 Complete above-ground removal of vegetation in area of the spill

2.3 Trampling and crushing of vegetation in adjacent areas during access and cleanup

2.4 Complete removal of selected consumer species in spill area

2.5 Displacement of other consumers in spill area and access routes

2.6 Increase in concentrations of suspended sediments and dissolved nutrients

2.7 Creation of pathways for increased saltwater inundation

2.8 Creation of pathways for increased rate of flow of runoff

2.9 Blockage or alteration of existing tidal drainage pattern

2.10 Change in frequency of inundation in localized areas

3. Attribute alterations

The chemical composition, and therefore the acute toxicity, of crude oils vary. The petroleum coating of flora and fauna will ultimately lead to death in some unknown (and differing) percentage of each species. Further discussion of species-specific toxicity is not warranted here because (1) toxicity of various petroleum products differs greatly, (2) the assumption is made that cleanup operations will remove all above-ground portions of affected vegetation and most disabled consumers, and (3) it is further assumed that elimination of spilled materials is relatively fast and nearly complete.

It is recognized that in many cases the latter two assumptions, especially the second, may be invalid.

A medium or large spill (greater than 3,840 liters, or 24 barrels) will require large numbers of men and equipment, and the resulting traffic (boats, barges, marsh buggies, trucks, helicopters) will increase the concentrations of suspended sediments and nutrients in the area. Construction of dikes, dams, or retaining walls will add to these concentrations and remove more vegetation and consumers. Depending upon the soil moisture conditions, the vegetation may be completely uprooted and destroyed in some areas. This results in an immediate decrease in food and cover for the remaining consumers in the area. The total area affected may or may not be small in comparison to the remaining area of productive vegetation. The effects on surviving animals, nitrogen fixation, and detritus production are dependent upon this ratio of affected to remaining vegetation. The amount of traffic and activity will be directly proportional to the size of the spill and/or the size of the affected area. The temporary displacement of consumers by the noise and activity of cleanup operations is of little importance.

Although the total cleanup activities may trample and crush a considerable amount of undisturbed vegetation in access and adjacent zones, the most significant impacts of the entire spill-cleanup sequence are the effects on waterflow regimes. Unlike the alterations discussed above, the changes in waterflow regimes result in long-term consequences. A variety of vehicles used during cleanup (primarily marsh buggies in the marshes) have the ability to create pathways and blockages which significantly alter water movements. The depth and number of ruts created by marsh buggies is dependent upon the number of vehicles and the degree to which they retrace existing tracks. In areas that are submerged daily, the depressions are less likely to significantly alter water movement patterns. Hence, in the areas near the estuary, confinement of marsh buggy traffic to a narrow corridor may be wise. However, in areas further removed from the estuary, deep ruts resulting from retraced trails would form a depression for the movement of water and, if deep enough, may result in standing bodies of water after the tide has receded. The orientation and depth of the depressions determine whether they (1) remain for long periods of time and (2) increase or decrease the frequency of inundation of a given area of land. Areas dominated by saltgrass or shore grass may be replaced by stands of smooth cordgrass when the frequency and/or duration of inundation decreases. The total area affected is site specific and could range from insignificant to highly significant when compared to the total area of salt marsh. Consumers that depend upon smooth cordgrass and its epiphytes for food and/or cover may ultimately increase or decrease.

The amount of detritus exported to the adjacent estuarine system is directly proportional to the standing crop of smooth cordgrass. If

the affected area is close to the estuary, the frequency of inundation and detritus export may remain unchanged. However, the depressions allow faster movement of water in both directions. This results in an increase of turbidity and a decrease in the efficiency of the detritus-filtering mechanism of the salt marsh. Thus, a net increase of exported detritus could result. Net amounts of nutrients and sediment probably would not change significantly.

If the affected area is further removed from the estuary where isolated ponds may exist, intramarsh circulation could be affected. Depressions could connect individual water bodies and increase the intermixing of their contents. Waterfowl and wading bird use would be expected to increase in these new deprestions with standing water. At the ecosystem level, however, this increase is slight.

Disturbance factors should be recognized as an important consideration because they extend the effects of the project beyond the boundaries of the immediate site.

4. Key attribute alterations

The significance of vegetation and consumer losses due to the spill per se is proportional to the size of the spill, the area covered, and the chemical composition of the petroleum. The extent of this alteration cannot be predicted. The alteration which potentially leads to the most long-lasting impacts on the ecosystem is the creation of depressions in the land surface. Effects which are large in areal extent and long-term may result from induced changes in waterflow regimes. As discussed earlier, the total area affected (and thus, the kinds and numbers of vegetation and consumers) is site specific.

Site shutdown and restoration.

1. Activity sequence

The activities of site shutdown and restoration are inherently similar to those of site access and site preparation. Termination of production at the wellsite involves the pulling of all tubing and downhole equipment. This requires a small rig. It will be barge-mounted for marine sites and truck-mounted for road-accessed sites. Dredging may be necessary at a marine site to accommodate barge traffic. Precautions are necessary during all activities to control waste liquids associated with equipment removal. The bore is filled with mud and capped with cement; this material is trucked or barged to the location. Casing is cut well below ground level, and the wellhead area is filled. Some surface equipment may be reconditioned

and used elsewhere; most (supply lines, flowlines, pilings, superstructure) have usually deteriorated to the extent that they are removed and sold for scrap. Additional trucks, marsh buggies, or barges are necessary for this disassembly and removal.

The remaining major activity of site restoration consists of returning land elevations to prior levels. Basically similar situations exist at marine and road-access locations: depressions (canals, borrow pits/ditches) may or may not be plugged or filled; protrusions (dikes, spoil levees/piles) may or may not be leveled. These activities, if performed, require the major earth-moving equipment listed in the sections that discuss access to site and site preparation. It is unusual for petroleum companies to fill access canals. The canals are used as long as the field is active or the well is productive. During this long period canal banks erode and old spoil compacts and subsides. Thus there is not enough fill from old spoil to refill the canal. In most cases large amounts of fill would have to be barged to the site, which would be economically unfeasible. Therefore many canals are simply abandoned, though in places where canal water movement posed problems, canal plugs have sometimes been constructed.

Accumulated scrap or residue is buried, hauled away, or burned at the site. Revegetation may be attempted if the owner requires or if large areas of newly exposed soils result.

If an entire field has ceased production, centralized production facilities are removed as well. This operation is a repetition of disassembly and removal activities as previously discussed.

2. Primary ecological alterations

2.1 Trampling and crushing of vegetation at wellsite and along supply lines and flowlines

2.2 Complete removal or burial of plants and consumers during equipment removal and earth-moving operations

2.3 Planting of vegetation in newly exposed areas

2.4 Increases in concentrations of suspended sediments and dissolved nutrients

2.5 Introduction of toxic materials to the soil and water systems (spilled or buried)

2.6 Creation of pathways for increased saltwater inundation (new buggy tracks)

2.7 Elimination of pathways for increased saltwater inundation (filling/plugging)

2.8 Creation of pathways for increased rate of flow of runoff (new buggy tracks)

2.9 Elimination of pathways for increased rate of flow of runoff (filling/plugging)

2.10 Changes in frequency of inundation in localized areas (buggy tracks and filling/plugging)

2.11 Displacement of consumers in wellsite area and access routes

3. Attribute alterations

The movement of work crews and vehicles over the land surface tramples and crushes vegetation. Marsh buggy travel over undisturbed marsh is primarily associated with retrieving surface pipelines. Depending upon the soil moisture conditions, the vegetation may be completely uprooted and destroyed in some zones. This results in an immediate decrease in food and cover for the consumers in the area. The total area thus affected is small in comparison to the remaining area of productive vegetation, and the effects on animals, nitrogen fixation, and detritus are insignificant.

The depth and number of ruts (decrease in land elevation, storage 11) created by marsh buggies is dependent upon the number of trips and the degree to which they retrace existing tracks. In areas that are submerged daily, the depressions are less likely to significantly alter water movement patterns. Hence, in areas near the estuary, confinement of marsh buggy traffic to a narrow corridor may be wise. However, in areas further removed from the estuary, deep ruts resulting from retraced trails would form a depression for the movement of water and, if deep enough, may result in standing bodies of water during wet seasons. The orientation and depth of the depressions determine whether they (1) remain for long periods of time and (2) increase or decrease the frequency of inundation of a given area of land. Areas dominated by saltgrass or shore grass may be replaced by stands of smooth cordgrass when the frequency and/or duration of inundation increases. The converse may occur when frequency and/or duration of inundation decreases. The total area affected is site specific and could range from insignificant to highly significant

when compared to the total area of salt marsh. Consumers that depend upon smooth cordgrass and its epiphytes for food and/or cover may ultimately increase or decrease.

The amount of detritus exported to the adjacent estuarine system is directly proportional to the standing crop of smooth cordgrass. If the affected area is close to the estuary, the frequency of inundation and detritus export may remain unchanged. However the depressions allow faster movement of water in both directions. This results in an increase of turbidity and a decrease in the efficiency of the detritus-filtering mechanism of the salt marsh. Thus, a net increase of exported detritus could result. Net amounts of nutrients and sediment probably would not change significantly.

If the affected area is further removed from the estuary where isolated ponds may exist, intramarsh circulation could be affected. Depressions could connect individual water bodies and increase the intermixing of their contents. Waterfowl and wading bird use would be expected to increase in these new depressions with standing water. At the ecosystem level, however, this increase is slight.

Additional destruction of vegetation and consumers is expected if spoil levees/piles and dikes are leveled. The planting of vegetation in newly exposed areas, however, would requite these losses.

The increases in suspended sediments associated with disassembly operations (at marine sites) and filling of depressions (canals, ditches, pits) are transient and affect a relatively small area, especially if plugs are first placed at the mouths of the depressions. Reestablishment of vegetation will help prevent long-term erosion problems. Filling canals, ditches, borrow pits, and other depressions eliminates these artificial pathways for inundation and runoff that have existed for many years. The impacts (if any) resulting from the original physical changes have already occurred. The effects and desirability of filling these depressions must be assessed on a site-by-site basis while considering the objectives of a particular refuge system. Especially important are the induced vegetation effects resulting from changes in frequency of inundation and runoff rates. Perhaps of less importance are the losses of phytoplankton and aquatic organisms associated with these depressions.

Small amounts of toxic materials may enter the soil and/or water systems during disassembly, removal, and cleanup of equipment and pipelines. As emphasized in the section of this report on spills and cleanup, the magnitude of effects depends on the composition of the spilled material, the amount of material, and the area covered by the material. The latter factor is strongly influenced by the amount of surface water present. Both the short-term and long-term effects are site specific and cannot be predicted.

Disturbance factors should be recognized as an important consideration because they extend the effects of the project beyond the boundaries of the immediate site.

4. Key attribute alterations

Creation (by marsh buggies and other vehicles) and elimination (by filling) of depressions in the land surface are the alterations which lead to the most significant impacts on the ecosystem. Induced changes in waterflow regimes allow effects which are large in areal extent and long lasting. The total area affected (and thus the kinds and amounts of vegetation and consumers) is site specific.

Brackish Marsh

Seismic preexploration.

1. Activity Sequence

Surveyors enter the marsh by truck, marsh buggy, or foot, stake the lines, and mark the areas where shot holes and geophones will be placed. Vegetation may be cleared along a path 3 to 4 m (10 to 15 ft) wide. A drilling truck or buggy and one or two support vehicles enter next; holes are drilled, charges and recording equipment are placed, and shots are fired. Geophones are retrieved and placed for the next series of shots. After completion of an entire shot line, the holes are plugged and the crew exits.

2. Primary ecological alterations

2.1 Creation of ruts or depressions in the land surface

2.2 Trampling and crushing of vegetation along shot line path

2.3 Localized change in direction of water flow

2.4 Creation of pathway for increased rate of flow of runoff

2.5 Possible creation of pathway for increased saltwater inundation

3. Attribute alterations

The movement of work crews and marsh vehicles over the land surface tramples and crushes vegetation in a zone wider than that cleared for shot placement. The vegetation may be completely uprooted and destroyed in some areas, depending upon the soil moisture conditions. This results in an immediate decrease in food and cover for the consumers in the area. The total area affected is usually small in comparison to the remaining area of productive vegetation, and the effects on animals, competition (shading), rough-mat formation, and detritus accumulation are insignificant.

The depth and number of ruts created by marsh vehicles are dependent upon the total number of trips and the degree to which vehicles retrace existing tracks. Deep ruts resulting from retraced trails will form surface depressions for the movement of water and, if deep enough, may result in standing bodies of water during wet seasons. The orientation and depth of the depressions determine whether they (1) remain for long periods of time and (2) alter the water regime of a given area of land by increasing or decreasing the frequency of submergence/emergence, average depth, and duration of submergence. Areas dominated by marshhay cordgrass may be replaced by stands of threesquare or other water-tolerant species when the frequency and/or duration of submergence increases. The converse may occur when frequency and/or duration of submergence decreases. Although the total area affected is site specific, it is usually small when compared to the total area of brackish marsh. Consumers that depend upon these grasses and sedges for food and/or cover may ultimately increase or decrease.

The depressions allow a faster runoff of surface and standing water in localized areas. The long-term effects on suspended sediments and nutrients are slight. If vehicle tracks occur in areas of the marsh where isolated ponds exist, intramarsh circulation could be affected. Depressions could connect individual water bodies and increase the intermixing of their contents. Waterfowl and wading bird use would be expected to increase in these new depressions with standing water. At the ecosystem level, however, this increase is insignificant.

The degree and significance of wildlife displacement resulting from all oil and gas activities, including preexploration, are impossible to predict or quantify. The point where noise and human presence may change temporary and partial displacement to permanent and complete displacement is unknown, but this factor should be considered during all phases of activities since it extends the effects of the project beyond the boundaries of the immediate site. In general, preexploration activities are short-term (two weeks or less), small scale, and result in only minor wildlife displacement, even when explosive methods are used.

4. Key attribute alterations

The alteration which leads to the most significant impacts on the ecosystem is the creation of depressions in the land surface. Effects which are large in areal extent and long term may result from induced changes in waterflow regimes. As discussed earlier, the total area affected (and thus, the kinds and numbers of consumers) is site specific.

Gravity preexploration.

1. Activity sequence

Gravity surveys may involve the placement of a relatively small piece of equipment on the marsh surface. This unit (the gravity meter) may be carried to stations by truck, marsh buggy, boat, or foot. Survey crews are not required since data need not come from predetermined locations. It is necessary only to plot the locations of the data-collection stations on a map. A small amount of vegetation is trampled during the placement of the gravity meter. Several minutes are required for data collection; the unit is then packed and carried to the next station. The number of stations required for a gravity-meter survey is less than the number of shot holes necessary for a seismic survey. Two men with adequate transportation can efficiently conduct a gravity-meter survey.

2. Primary ecological alterations

2.1 Possible creation of ruts or depressions in the land surface

2.2 Trampling and crushing of vegetation at the station locations

2.3 Possible localized change in direction of water flow

2.4 Possible creation of pathway for increased rate of flow of runoff

3. Attribute alterations

The movement of vehicles and workers over the marsh surface crushes vegetation. The vegetation may be completely uprooted and destroyed in some areas, depending upon the soil moisture conditions and the type of transportation that is utilized. The vegetation loss

results in an immediate decrease in food and cover for the consumers in the area. The total area affected is usually very small in comparison to the remaining area of productive vegetation because: (1) the gravity meter is quite portable, (2) data stations are not located along predetermined straight lines, and (3) the stations are not regularly spaced. Stations may frequently be accessed by boat or by foot; a maximum of one lightweight surface vehicle is necessary for the entire operation. Furthermore, this vehicle need not travel straight-line paths across the marsh surface; it can make maximum use of existing roads or canals. Therefore, the effects on consumers, competition (shading), rough mat formation, and detritus accumulation are negligible.

The above discussion indicates total vehicular traffic associated with gravity surveys is less than that associated with seismic surveys. Nevertheless, any marsh-surface vehicle may potentially alter local land elevations. Ruts resulting from their use may form depressions for the movement of water and, if deep enough, may result in standing bodies of water during wet seasons. The orientation and depth of the depressions determine whether they (1) remain for long periods of time and (2) alter the water regime of a given area of land by increasing or decreasing the frequency of submergence/emergence, average depth, and duration of submergence. Areas dominated by marshhay cordgrass may be replaced by stands of three-square or other water-tolerant species when the frequency and/or duration of submergence increases. The converse may occur when frequency and/or duration of submergence decreases. Although the total area affected is site specific, it is usually small when compared to the total area of brackish marsh. Consumers that depend upon these grasses and sedges for food and/or cover will ultimately increase or decrease.

The depressions allow a faster runoff of surface and standing water in localized areas. The long-term effects on suspended sediments and nutrients are slight. If vehicle tracks occur in areas of the marsh where isolated ponds exist, intramarsh circulation could be affected. Depressions could connect individual water bodies and increase the intermixing of their contents. Waterfowl and wading bird use would be expected to increase in these new depressions with standing water. At the ecosystem level, however, this increase is insignificant.

The degree and significance of wildlife displacement resulting from gravity-meter surveys are slight. This is because of the small number of people, lack of noise, and short period of time required to complete a survey.

4. Key attribute alterations

The potential alteration which could lead to a significant impact on the ecosystem is the creation of depressions in the land surface.

Effects which are long term and large in areal extent may result from induced changes in waterflow regimes. These effects, of course, can occur only if trucks, buggies, or other surface vehicles are used. The total area affected (and thus, the kinds and numbers of consumers) is site specific.

Site access by leveed road.

1. Activity sequence

Surveyors enter the marsh by truck, marsh buggy, or on foot, stake the route, and leave the area. The staked route may or may not be the most direct pathway to the wellsite location. A dragline with board mats enters the site to excavate a continuous borrow pit and place the spoil to form a long continuous levee. The dragline proceeds along the marsh surface on that side of the levee from which the fill is borrowed and parallel to the levee route. The fill is placed in a continuous pile 10 to 13 m (30 to 40 ft) wide with an approximate slope of 30°. Three to 4 m (about 10 ft) usually remains as a berm, that distance between the foot of the levee and the edge of the borrow pit. The dragline shapes the material only approximately and then leaves it to drain and dry. A board road is placed on the top of the levee after synthetic material is laid to control water seepage. The dragline may exit by traveling on board mats, or if the roadway is completed, may be loaded on a large equipment-moving vehicle.

2. Primary ecological alterations

2.1 Creation of ruts or depressions in land surface - marsh buggy tracks and/or tracks from other accessory equipment

2.2 Loss of vegetation withinthe construction easement due to excavation and covering

2.3 Creation of borrow ditch 2 to 5 m (6 to 15 ft) wide and 1 to 2 m (3 to 6 ft) deep for increased saltwater inundation

2.4 Increases in concentrations of suspended sediments and dissolved nutrients

2.5 Blockage of normal surface-water runoff pathways by levee

2.6 Creation of a pathway parallel to levee for more rapid upland drainage and standing water from marsh

3. Attribute alterations

Surveyors and their equipment trample and crush vegetation outside the zone to be excavated, but the area involved is small. Furthermore, much of this trampled area may be covered by fill as construction proceeds. A more significant vegetation loss occurs during excavation of a 5-m (15-ft) wide borrow ditch and burial of marsh by fill for the roadway. The width of the latter zone is 10 to 13 m (30 to 40 ft). This direct loss results in an immediate decrease in food and cover for the consumers in the area. For a single roadway through a brackish marsh, the total area affected is usually small in comparison to the remaining productive vegetation; the impacts on consumers, competition (shading), rough mat formation, and detritus accumulation are insignificant. However, as each new road is constructed, the carrying capacity of the intact brackish marsh is decreased. Cumulative effects are unknown, and the threshold point (where one additional road will significantly affect the marsh) is obscure.

The depth and number of ruts created by marsh vehicles involved in road construction are dependent upon the total number of trips and the degree to which vehicles retrace existing tracks. Deep ruts resulting from retraced trails will form surface depressions for the movement of water and, if deep enough, may result in standing bodies of water during wet seasons. The orientation and depth of the depressions determine whether they (1) remain for long periods of time and (2) alter the water regime of a given area of land by increasing or decreasing the frequency of submergence/emergence, average depth, and duration of submergence. Areas dominated by marshhay cordgrass may be replaced by stands of three-square or other water-tolerant species when the frequency and/or duration of submergence increases. The converse may occur when frequency and/or duration of submergence decreases. Although the total area affected by vehicle ruts is site specific, it is usually small when compared to the total area of brackish marsh. Consumers that depend upon these grasses and sedges for food and/or cover may ultimately increase or decrease.

The depressions allow a faster runoff of surface and standing water in localized areas. The long-term effects of suspended sediments and nutrients are slight. If vehicle tracks occur in areas of the marsh where isolated ponds exist, intramarsh circulation could be affected. Depressions could connect individual water bodies and increase the intermixing of their contents. Waterfowl and wading bird use would be expected to increase in new depressions with standing water. At the ecosystem level, however, this increase is insignificant. The movement of vehicles over the marsh also crushes

some vegetation. The use of wooden mats to support draglines minimizes their damage, though in particularly soft marsh soils, a single traverse by a buggy or dragline may leave tracks readily identifiable for several years. Suspended sediment and nutrient increases that accompany the excavation are of short duration.

The ditch created by the borrowing of fill remains until refilled. Its effects are dependent upon its location relative to tidal influences. If the ditch is located near a tidally influenced water body, its presence allows some water from the uplands to bypass its normal movement over the marsh surface and thus flow directly to estuarine waters. Therefore, less fresh water flows into the nearby marsh area. The ditch also allows more frequent flooding by an increased quantity of brackish water since there is an open channel connected to tidal waters. As a whole, the amount of surface water flowing onto the marsh increases in the area of influence as a result of the freer flow of estuarine water. In addition, the water is of a higher salinity than previously.

The increased salinity of water eventually results in an increased soil salt concentration that can have physiological effects on the plants. In addition, the increase in estuarine water input may increase availability of some plant nutrients over the long term.

While the total quantity of surface water that floods the marsh may increase, the marsh will drain more rapidly because of the presence of the ditch. Thus, after ditching, drainage will become more dependent on tidal influence. Therefore, the average depth of standing water on the marsh decreases while the frequency of submergence/emergence of plants increases.

The increase in suspended sediments associated with the borrow pit excavation is short term and affects a ralatively small area. The increase in suspended sediments associated with the increased tidal influence and erosion of the levee banks is of much longer duration. Since there is an increased quantity of brackish water flowing over the surface of the marsh, the suspended sediment load could increase the turbidity and slightly accelerate elevation increase in the marsh. The degree and extent of these phenomena are highly site specific. If the borrow ditch is a great distance from tidal influence, the portions of the above discussion that imply increased inundation frequency must be tempered.

The decrease in duration of submergence and possible increase in turbidity can result in a decrease in production of phytoplankton and benthic algae on the marsh. This decrease in production along with the decreased duration of standing water will decrease the food and cover for aquatic invertebrates and small fishes in the unmodified

marsh. These changes decrease the suitability of the area as habitat for species such as alligator that prefer wetter conditions.

The increase in water depth in the borrow channel converts the ditched area from a brackish marsh to a channel or canal. Within the ditched area, phytoplankton may increase (Corliss and Trent, 1971) while marsh vegetation is eliminated. The net primary production per unit area of the phytoplankton may increase. However, when compared to the overall production of the original marsh, the net primary production in the ditch is lower (Darnell, 1976).

Increases or decreases in consumers are difficult to predict since many of the organisms can use organic material from various marsh sources. Bourn and Cottam (1950) and Adkins and Bowman (1976) have shown increases and decreases in various species, though Trent et al. (1972) noted a general decrease in consumer biomass when comparing residential canals and tidal creeks. Shifts in relative species abundance as well as changes in absolute numbers have been noted by Dale (1975) for channelized streams, and by Lindall et al. (1973) and Adkins and Bowman (1976) for canals.

Consumers associated with phytoplankton might be expected to increase relative to other consumers. Deeper areas furnished by the ditches may be favorable habitat for alligator and wading birds depending upon the food and cover provided. However the areal extent of this aquatic habitat is smaller than the decrease in brackish marsh resulting from levee and ditch construction. The productivity of the ditched area does not compensate for the loss of marsh.

The change in duration of standing water and increase in frequency of emergence will allow better gaseous exchange between the atmosphere and the soil. This, plus the increase in soil salinity, will give a competitive advantage to marshhay cordgrass over most of the other marsh plants. The other major plant group, consisting of rushes and sedges, is particularly significant as food for waterfowl and furbearers. The decline in abundance of this plant group would decrease the suitability of the area as habitat for these consumers. Predators such as the red wolf that depend upon furbearers for food might be adversely affected, though the increased cover from marshhay cordgrass and the availability of other food items might compensate.

Both major emergent plant groups provide cover and food materials for the small mammals and insects that are prey for predators and raptors as well as wading and shorebirds. Decreases in one plant group are roughly requited by increases in the other group. Therefore, the effects on most other consumers in the influenced area are minor.

4. Key attribute alterations

The key attribute alterations involve the digging of the borrow pit and disruption of flow patterns within the marsh. The continuous borrow pit provides a drainage pathway such that a significant proportion of the fresh water from upland drainage normally contributing to marsh sheetflow could discharge directly to the estuarine system without entering the marsh. In addition, the continuous borrow pit might allow estuarine water from tidal forces to regularly intrude into the marsh via the unobstructed drainage pathway. Finally, the presence of the borrow pit allows more regular and frequent mixing of estuarine and fresh water (from upland sources) and more rapid drainage of mixed surface water from the marsh. The area affected may range from the roadway and borrow pit to a much more extensive area if major waterflow patterns are altered.

Site access by canal and wellsite dredging.

1. Activity sequence

Surveyors enter the marsh by truck, marsh buggy, or on foot, stake the wellsite location and access route, and leave the area. The pathway may or may not be the most direct one possible. Usually there is no need to clear vegetation, but vegetation may be trampled and crushed in adjacent zones.

Site location, equipment availability, spoil placement requirements, and economic factors may dictate which type and size of dredge is used in each phase of the operation. In a brackish marsh, any new canal is usually an extension or branch of an existing canal. Therefore, a barge-mounted bucket dredge or a hydraulic dredge may be used. Alternatively, a track-mounted bucket dredge may be employed. Spoil is placed on both sides of the channel and completely around the wellsite in most cases. Canal depth must be about 3 m (8-10 ft); typical widths approach 23 m (70 ft); a 10-m (30-ft) berm typically exists between the canal edge and the inside foot of the continuous spoil banks (on both sides of the canal).

Small vessels, crew boats, supply boats, and tugs may move to the dredging site daily. Alternatively, marsh buggies may be used for these various functions. After the wellsite location is dredged (usually 50 by 115 m, or 150 by 350 ft), all equipment moves out of the area. Redredging may be necessary once every six months to once every five yr.

2. Primary ecological alterations

2.1 Creation of depressions in land surface by marsh vehicles

2.2 Loss of vegetation along canal route due to excavation, covering, and spreading of spoil

2.3 Creation of a pathway about 3 m (8-10 ft) deep and 23 m (70 ft) wide for increased saltwater inundation

2.4 Increases in concentrations of suspended sediments and dissolved nutrients

2.5 Blockage of normal runoff pathways

3. Attribute alterations

Surveyors and their equipment trample and crush vegetation outside the zone to be excavated, but the area involved is small. Furthermore, much of this trampled area may be covered by spoil as the dredging proceeds. A more significant vegetation loss occurs during excavation of a 23-m (70-ft) wide canal and a 0.58-ha (1.2-acre) wellsite and burial of bordering marsh by spoil. The area of the latter zone is dependent upon the type of spoil disposal technique, but it may be as much as five times the width of the canal itself. This direct loss results in an immediate decrease in food and cover for the consumers in the area. The total area affected for a single canal may be small in comparison to the remaining productive vegetation, and the impacts on consumers, competition, rough mat formation, and detritus accumulation can be minor. However, as each new canal and wellsite is excavated, the carrying capacity of the intact brackish marsh is decreased. Cumulative effects are unknown, and the threshold point (where one additional canal will significantly affect the marsh) is obscure.

The depth and number of ruts created by marsh vehicles involved in canal excavation are dependent upon the total number of trips and the degree to which vehicles retrace existing tracks. Deep ruts resulting from retraced trails will form surface depressions for the movement of water and, if deep enough, may result in standing bodies of water during wet seasons. The orientation and depth of the depressions determine whether they (1) remain for long periods of time and (2) alter the water regime of a given area of land by increasing or decreasing the frequency of submergence/emregence, average depth, and duration of submergence. Ruts parallel to the tidal flux may increase the frequency of submergence/emergence;

those perpendicular to tidal water movement may decrease the frequency. Areas dominated by marshhay cordgrass may be replaced by stands of threesquare or other water-tolerant species when the frequency and/or duration of submergence increases. Areas dominated by threesquare may be replaced by marshhay cordgrass when frequency and/or duration of submergence decreases. The total area affected is site specific and usually small when compared to the total area of brackish marsh or the effects of canal excavation.

The depressions can contribute to faster runoff of surface and standing water in localized areas. Thus, the duration of submergence and the average depth of water in nearby areas are decreased while the frequency of submergence/emergence is increased. If vehicle tracks occur in areas of the marsh where isolated ponds exist, intramarsh circulation could be affected. Depressions could connect individual water bodies and increase the intermixing of their contents.

Increases in suspended sediments associated only with excavation are transient and affect a relatively small area, especially if temporary plugs are placed at the mouth of the canal. Erosion of canal banks and spoil deposits are long-term effects. Erosion of canal banks is proportional to the speed and amount of boat traffic. Erosion of spoil deposits will proceed until they become vegetated by pioneering plant groups. This ecesis will usually occur within two yr or less, depending upon the edaphic conditions and sources of seed stock.

Increases in suspended sediments associated with marsh vehicle traffic may have short-term and long-term components. However the effects are less than those effects associated with canal erosion.

The canal also creates a large route for increased saltwater inundation (Bourn and Cottam, 1950; Gagliano, 1973; Copeland and Dickens, 1974; Darnell, 1976). The pattern and height of spoil placement are the most important factors that determine if the salt water is contained within a localized zone or inundates extensive areas. Waterflow in the canal depends upon canal location and orientation in the marsh, the influence of tidal waters, and the portion of the canal in question. Long, straight sections of the canal, especially with tidal influence, may show an increase in the volume of water exchange compared to the preconstruction conditions (Gagliano, 1973).

Further away from tidal action, especially in dead-end canals, circulation may be poor and conditions may be quite variable (Smith, 1970; Adkins and Bowman, 1976; Darnell, 1976). There may be a buildup of organic matter, limited aeration, and poor flushing. Darnell (1976) noted possible concentrations of sulfates in these

areas, though Adkins and Bowman (1976) have not found this increase in every circumstance.

The water pathway afforded by the canal may permit an acceleration of freshwater runoff from the marsh (Copeland and Dickens, 1974; Darnell, 1976). The result may be a lower water table under the marsh surface, and eventually drier conditions in high marsh areas.

Spoil placement may block existing small drainages so that the marsh may be effectively impounded. This may result in localized changes in runoff and standing water. Plants may be exposed to increased salinities and acid conditions. In other instances, however, the resulting impounded area may have less saline conditions and contain plants characteristic of fresh marshes (Conner et al., 1976). Thus, the total area affected is site specific and could range from insignificant to highly significant when compared to the total area of marsh.

Replacement of marsh soil and vegetation by deep bodies of water (canals and wellsites) creates new habitat with attendant community changes. In the canal, algae increase while marsh vegetation is eliminated. Net primary production of algae will probably increase (Corliss and Trent, 1971). However, the total net primary production will decrease (Darnell, 1976) because of elimination of other marsh plant types.

The number of aquatic consumers may decrease or increase in the canals (Bourn and Cottam, 1950; Adkins and Bowman, 1976). Measures of total biomass have generally shown a decrease (Trent et al., 1972). Shifts in relative species abundance will be evident; species indicative of deep aquatic habitats will increase compared to typical marsh species (Lindall et al., 1973; Dale, 1975; Adkins and Bowman, 1976). However, turbidity that results from chronic erosion can decrease the suitability of the standing water as habitat for phytoplankton, aquatic invertebrates, and fish.

Some areas of brackish marsh have little standing water upon them except during storms or periods of exceptionally high tides. The communities in these areas may be those most altered by canal excavation.

The spoil from canal excavation is usually subaerial, though with slumping and spreading the edges may become subaqueous. These edges may support marsh grasses after a few years. The higher areas may have growths of marshhay cordgrass if the soil is damp and saline, or marsh elder and groundsel on drier ground.

Use by wading and shorebirds may increase or decrease depending upon the suitability of the canal and/or impounded marsh to provide habitat for small fish and invertebrates. If the marsh is impounded and the salinity remains low, desirability of the area may be enhanced for waterfowl. However, if the area becomes drier and develops upland vegetation, it may become less desirable for waterfowl use. The areal increase in favorable habitat is usually less than the decrease resulting from dredging and vehicle movement, unless freshwater is abundant and sound habitat management is pursued.

Displacement due to activity and noise during construction is short term since dredges may progress at rates or up to 300 m (975 ft) per day. However the area affected may be considerably larger than the excavation or spoil sites themselves.

4. Key attribute alterations

Key attribute alterations induced by this phase of oil and gas operations involve changes in land elevations. Canals and marsh vehicle tracks may allow an increase in frequency and area of inundation by salt water. First-order effects include removal of vegetation and creation of a standing water habitat. If the saltwater flows are not confined by spoil and/or natural topographic features, much larger areas of marsh may be affected. Long-term changes in vegetation and consumer groups would occur. Long-term turbidity increases would also result.

Canal construction requires spoil placement; this results in higher land elevations. Burial of flora is less significant than possible alterations of waterflow regimes. Poorly planned placement of spoil may result in blockage of existing upland drainage and/or runoff patterns. These blockages will lead to long-standing changes in types and/or amounts of vegetative cover, followed by corresponding changes in consumers.

<u>Wellsite preparation and operation for leveed marsh-floor locations.</u>

1. Activity sequence

The equipment and techniques utilized during construction of the access road are also employed during preparation of the wellsite. After surveyors have staked the area, the dragline constructs a ring levee around the entire site by utilizing borrow from pits located exterior to the levee. Outside dimensions of the levee are usually less than 120 by 120 m (400 by 400 ft). Initial levee height is about two m (six ft); shrinkage occurs through time. A sump ditch is excavated immediately inside and parallel to the entire levee.

A board foundation similar to that laid for the access road is placed over the wellsite area. Internal earthworks are constructed and shaped by various pieces of equipment, and the pad site is surfaced in a manner similar to that used for the access road. A variety of auxiliary equipment and materials is moved to and stored in the area prior to arrival of heavy drilling equipment. Drilling activities require one to three months. Test results indicate whether the well should be put into production or capped and shut down.

2. Primary ecological alterations

2.1 Complete vegetation removal inside the ring levee and in borrow pits outside the ring levee

2.2 Increases in concentrations of suspended sediments and nutrients

2.3 Creation of pits and a ring levee which alter water flows in localized areas

2.4 Introduction of toxic materials to water and soil systems

2.5 Extended displacement of wildlife from entire area adjacent to roadway, canal, and wellsite

3. Attribute alterations

Construction of the wellsite is usually an extension of construction of the access road; the dragline merely continues operating, excavating disjunct borrow pits to build the ring levee. This work and the auxiliary preparation of the wellsite interior removes vegetation and associated insects from a maximum of 1.4 ha or 3.5 acres. This removal represents a loss of food and cover for all the remaining consumer groups: waterfowl, wading and shorebirds, mammals, and alligators.

Short-term increases in suspended sediments and nutrients result from construction activities. Longer term increases resulting from erosion of the ring levee are of minor consequence. Neither the short-term nor the long-term effect usually has a significant impact on the surrounding area.

The ring levee may influence water flows by isolating/filling depressions or blocking small drainages. For a single leveed site, the effects are usually localized and small when compared to (1) the remaining unaffected marsh and (2) the effects of road construction. The exterior borrow pits can affect a larger area of marsh than the ring levee. The zone(s) affected depends upon the placement pattern, depth, and surface area of these pits. They may remain as isolated ponds of standing water which collect runoff via intercepted drainage, or they could become interconnected due to drainage channels and/or consumer usage (compaction of pathways between ponds). The drying effect of this increased drainage may or may not lead to vegetation changes in adjacent lands. The total area affected may be several times the wellsite area; the frequency of inundation is usually not affected. Hence, impacts on the functioning of the ecosystem by a single wellsite are usually limited.

The borrow pits around the wellsite levee create a new habitat that favors phytoplankton and consumers associated with deep standing water bodies. Alligators may be attracted to these ponds and may cause their interconnection due to the trails they leave when moving from one pond to another. Waterfowl and wading shorebirds may be attracted if populations of small fish and invertebrates inhabit the borrow pits, though their presence will increase only when human disturbance is minimal.

The total net primary production will decrease in the borrow pits since the marsh plants are removed (Darnell, 1976). The biomass of consumers in the pit area may decrease or increase depending upon whether the original marsh had standing water upon it or was relatively dry. Comparisons of biomass between marsh areas and canals have generally shown biomass decreases in the newly created aquatic systems (Trent et al., 1972). These changes are usually limited to the borrow pits themselves and the immediate adjacent areas of marsh.

During this phase of operations (one to three months), the water and soil systems are exposed to a wide variety of pollutants, from drilling mud, sump discharge, and vehicle and equipment waste (exhausts, oil, grease, gasoline). The kinds and amounts of these materials, and hence their effects, are site specific. Consequences may involve vegetation and/or consumers (over a short or long period of time) and, therefore, could range from insignificant to highly significant. Spills and cleanup operations are treated in a later section of this report.

Displacement due to activity and noise during construction is short term since the operation takes only 10 to 14 days. However, subsequent activities, drilling and production, may continue for months or years, and the area affected extends considerably beyond the leveed site and borrow pits.

4. Key attribute alterations

The key attribute alterations include direct removal of vegetation and consumers, localized changes in land elevation, and introduction of pollutants. Since the area affected by levees and pit excavation is small for a single wellsite (relative to the unmodified marsh), the loss of food and cover for supported consumers is limited. However, changes in land elevations can influence waterflow regimes over a significant area so that the area affected may range from the wellsite alone to much larger portions of the marsh.

Because the persistence and potency of spilled components is highly variable, the extent of impacts from pollutants is not predictable. Since the effects of sublethal levels of persistent pollutants are not catastrophic (as is the case in a blowout or major spill), the toxins may permeate large numbers of individuals and species before damage is noticed. By this time, affected organisms and water flows will have served as agents of dispersal, so that areas much larger than the wellsite may be affected.

Installation and maintenance of lines.

1. Activity sequence

Lines associated with oil and gas activity may be separated into three categories based on similarities of characteristics: (1) temporary surface lines to supply drilling sites with water and gas; (2) permanent or temporary overhead electrical lines to supply electrical and phone service to production, treatment, and pump station facilities; and (3) permanently buried lines which transport gas and oil to distribution or refining centers. The activity levels required for each line type vary according to category and range from simple to complex.

Water, gas, and other lines bringing supplies to the wellsite are usually laid on the surface, typically paralleling existing access roads or canals. Flowlines, carrying crude to the processing center or brine to disposal wells, are other surface lines typically placed alongside leveed roads and access canals. Lines are small and usually connected and placed by hand. Equipment supply is provided by trucks or barges that use existing access routes. Where surface lines cross unmodified marsh, a survey crew enters by foot or marsh buggy, depending upon the length of the line, and clears and stakes the alignment. Equipment supply is provided by marsh buggy. Lines are usually connected and placed by hand. When crossing open water areas (canals, bayous, ponds, etc.), supply lines and flowlines are either buried in the bottom or elevated atop support pilings.

Draglines or jetting barges are necessary for the burying procedures. Placement of supports for elevated flowlines is accomplished by marsh buggy and by hand operations.

Overhead electrical lines typically parallel existing access corridors and require equipment for placing support poles and stringing line. A tractor or backhoe operating from a leveed road or access canal may perform these activities. Holes are dug, and poles are placed and anchored. The site is then abandoned.

Installation of transport lines 20 to 150 cm in diameter (8 to 60 inches) requires a more complex series of activities. Lines are buried using either the push method or flotation method. Both methods require a survey crew to partially clear and stake an alignment which typically follows the shortest straight-line route between points. Access is provided by marsh buggy or boat.

If the push method is utilized, which is normally the case where the marsh substrate is firm enough to support the equipment, a dragline on mats or a buggy-mounted backhoe follows the survey crews and excavates a ditch 2 m (6 ft) deep and 3 m (10 ft) wide. Spoil is piled continuously along one or both sides. A specialized stationary barge, located in a dredged slip, assembles the pipe sections and pushes the line down the channel; the pipe is supported by floats and guided by a marsh buggy. Once positioned, the line is sunk in place by removing the floats. Typically, approximately one m (four ft) of waterwill remain above the pipe. The ditch may be left open but is more frequently backfilled by the dragline. If backfilling is not performed, an open-water canal bordered by one or two continuous spoil levees remains. Backfilled routes appear as straight shallow depressions due to subsequent spoil shrinkage and subsidence. When small watercourses are crossed, earthen plugs are placed to prevent water flow down the ditch. Traversing of larger water bodies (canals, streams, rivers) requires the use of dredges or jetting equipment. Easement widths range from about 10 to 50 m (30 to 150 ft) depending upon the line size.

If the flotation method of pipe laying is utilized, which is often the case where the marsh substrate is too unstable to support terrestrial installation equipment, a barge-mounted bucket or hydraulic dredge excavates the ditch. A canal 12 to 15 m (40 to 50 ft) wide and 2 to 3 m (6 to 9 ft) deep is necessary to provide access for the pipelaying equipment. A smaller deeper ditch is dredged within the canal for actual line placement. Spoil is placed along each side of the canal, generally 10 to 15 m (30 to 40 ft) away from the edge. Gaps in the spoil levees may or may not be provided. Levee dimensions depend upon canal width and depth (which determine the quantity of spoil) and spoil stability. A levee may be 1 to 2 m (3 to 5 ft) high and have a base width of 17 to 28 m (50 to 85 ft). The

pipe is assembled on and laid by the floating barge, which travels the length of the line. Earthen plugs, dams, riprap, or bulkheads may be required wherever a canal intersects another waterway in order to prevent drainage, erosion, and navigation traffic. Whenever open water is traversed, the same equipment is used, although only a trench will be dredged. If a hydraulic dredge is used, spoils may be pumped to nearby land, dispersed over the adjacent area, or piled up in a spoil island. Normally, flotation canals are not backfilled due to their large size. Straight open-water canals flanked by low spoil levees are the final product of the flotation method.

Once pipelines are pressure checked and operating, they are periodically inspected for leaks; boats, marsh buggies, or aircraft may be employed. The equipment utilized and traffic frequency depends on the nature of the pipeline, its size, and the local marsh conditions.

2. Primary ecological alterations

2.1 Partial vegetation loss within line easement due to trampling and crushing effects of construction machinery

2.2 Complete loss of vegetation within canal zone 10 to 100 m (30 to 300 ft) wide and on disjunct spoil disposal areas

2.3 Partial or complete removal of consumer groups, depending on the type of line and placement methodology utilized

2.4 Increased concentration of suspended sediments and dissolved nutrients

2.5 Creation of pathways increasing saltwater inflow

2.6 Creation of pathways increasing the rate of freshwater runoff

2.7 Blockage or alteration of existing marsh drainage patterns due to levee construction and canal excavation

2.8 Change in inundation frequency of localized areas

3. Attribute alterations

Attribute alterations associated with line installation varies widely depending on the type and size of line, site location, and placement methodology. Three general categories of lines, segregated according to the similarity of ecological effects are described: (1) surface supply and flowlines, which provide drilling sites with water and gas or transport well products to treatment or disposal facilities; (2) permanent overhead electrical lines to supply electrical and phone service to production, treatment, and pump station facilities; and (3) permanently buried gas and oil pipelines, which transport products to distribution or additional refining centers.

In many instances surface supply lines and flowlines and overhead electrical lines follow existing leveed roadways or access canals where maintenance and repair are easily facilitated. Associated ecological alterations (trampling of vegetation, localized water turbidity, etc.) are typically small in magnitude, very localized in effect, and occur in already altered locations. Distinguishable effects attributable to line installation that exceed or significantly contribute to effects associated with leveed roads or canals are considered negligible. Thus, when such lines closely parallel existing marsh roads or dredged access canals, the associated alterations are considered to be of minor consequence to the ecosystem as compared to the effects produced by prior access-associated activities.

However, when surface flowlines or supply lines require overland routes through unmodified brackish marsh, the magnitude of attribute alterations increases. Marsh buggies transporting work crews and supplies along the line trample and crush vegetation. Depending upon soil moisture conditions and number of vehicle traverses (typically restricted to two or three trips), the vegetation may be completely uprooted and destroyed in some localized areas. An immediate loss of wildlife food and cover resources results, but such small losses represent relatively minor alterations for most mammalian and avian species due to the restricted areal extent of the line as compared to adjacent unmodified areas. The effects on the detrital cycle and waterflow regime (as a result of little tidal amplitude and only a limited number of vehicular trips) are considered to be of minor consequence to the ecosystem.

A relatively small amount of dredging may be necessary where these small lines cross existing watercourses. The concentrations of suspended nutrients and sediments are temporarily increased in localized areas near the site.

Installation of a major gas/oil pipeline generates many alterations similar to those associated with dredging access canals. A typical pipeline easement ranges from 10 to 100 m (30 to 300 ft) in width depending upon the size of the line, which therefore results in direct habitat alterations ranging from 1 to 10 ha per km (3.6 to 36 acres per mi) of easement. Dredging and spoil deposition directly remove the marsh vegetation Spartina patens and Scirpus spp. within portions of the easement. Heavy marsh buggies crush and trample other nearby vegetated areas. Food and cover resources for consumer groups are removed directly with loss of food-bearing and cover-producing plants. Consumers such as the various waterfowl species, furbearers, small mammals, terrestrial insects, aquatic invertebrates, alligator, and some wading and/or shorebirds are affected. If pipeline ditches are backfilled upon completion of installation procedures, recovery of Spartina can immediately begin; otherwise, if the channel is not backfilled, open-water channels, bordered by elevated spoil levees and vegetated by new plant assemblages, are substituted for highly productive brackish marsh. Phytoplankton (plant assemblage 14) may increase in the deeper water bodies (Corliss and Trent, 1971). However, the total net production of organic material decreases in altered areas compared to the original marsh (Darnell, 1976).

There may be decreases or increases in numbers of consumers in pipeline canals (Bourn and Cottam, 1950; Willingham et al., 1975; Adkins and Bowman, 1976). Measures of total biomass have often shown decreases (Trent et al., 1972), though measurements have not been consistent in all canals. Relative shifts in species abundance are evident with creation of deeper water bodies (Lindall et al., 1973; Dale, 1975; Willingham et al., 1975; Adkins and Bowman, 1976).

It is difficult to predict which groups of consumers increase or decrease because many species use organic material from a variety of sources for food. The kinds and numbers of organisms existing in the isolated, sometimes nonflowing, water bodies depends upon frequency, timing, and amount of tidal inundation. Willingham et al. (1975) and Adkins and Bowman (1976) compared abundance of various consumers in control, open, semiclosed, and closed pipeline canals. Overall, control areas and open canals were better habitats for estuarine species as evidenced by diversity and abundance measurements. However, semiclosed and closed canals generally contained the largest organisms and were favored by many arthropods, particularly shrimp.

Other organisms, particularly predators further along the food chain may increase or decrease depending upon the amount of area affected and the types and quantity of consumer species available as food. However it is usually the case that areal increases in standing-water habitat do not compensate for the losses of marsh resulting from the construction activity.

Marsh buggies and draglines associated with canal excavation depress the marsh surface, forming numerous ruts and other depressions. Such depressions may alter existing water flows by channeling surface waters in new directions. Unless such alterations become extensive over large areas, the effects are usually quite localized in the brackish marsh. Tidal amplitude, fluctuation frequency, and flow velocities are generally so small in brackish marsh that alterations of water-movement patterns are restricted to relatively small areas. Small open-water bodies may be created, but they are of minor consequence at the ecosystem level. Heavy traffic concentrated along one route, however, may produce ruts capable of channeling surface waters such that freshwater runoff and saltwater intrusions are increased. Intramarsh circulation could be affected as individual water bodies are connected and intermixing occurs.

Of greater significance to the hydrological regime of the brackish marsh, however, are the dredging of pipeline channels and subsequent spoil deposition. Canals that are adequately backfilled and/or plugged may have localized effects on circulation patterns, but they do not result in long continuous channels and spoil ridges. Water movement patterns remain essentially unchanged following restoration procedures.

Open unplugged channels bordered by continuous spoil levees generate a complex of interactions which may essentially facilitate changes in the marsh's freshwater-saltwater ratio. Long continuous canals intercept freshwater sheetflow from the uplands and facilitate rapid marsh drainage. Associated spoil levees block or redirect freshwater sheetflow, preventing its entry into portions of the marsh. Simultaneously, unplugged canals may allow increased intrusion of more saline estuarine waters further inland. The net result is increased water salinity in the marsh. Increased water salinity eventually results in increased soil salt concentrations that can have physiological implications on plant assemblages. Drainage, impoundment, and introduction of stronger tidal forces (if estuarine areas are close enough to affect brackish marsh sites) resulting from pipelining canals and levees may cause extensive changes in such hydrologic characteristics as the duration of water submergence, average water depth, and frequency of substrate exposure.

If drier marsh conditions (reduced length of submergence, shallow-water depth, and frequent substrate exposure) are combined with increased soil salinity, marshhay cordgrass is given a competitive advantage over most other marsh plants. The other major plant group, composed primarily of sedges and rushes, is a particularly significant food source for many waterfowl species and furbearers, primarily the muskrat. Reduction of this plant component decreases the area's habitat suitability for these consumers. Drier conditions also result in decreased phytoplankton and benthic algae production as well as decreased food and cover for aquatic invertebrates and small fish. Secondary consumer groups (predatory mammals

and raptors) might be adversely affected if the alteration were extensive enough. The magnitude of alterations described above varies according to channel dimensions, number of channels, channel orientation relative to freshwater and saltwater sources, levee orientation and placement, the hydrologic gradient of the watershed, and other site-specific characteristics.

Channel excavation increases total suspended sediments. Secondary effects in vegetated areas are typically temporary and localized in areal extent. In open-water sites, increased suspended sediments temporarily increase water turbidity and sedimentation rates, as well as local biological oxygen demands (as the result of high soil organic content). Sediment dispersion, however, may affect more extensive areas, depending upon prevailing water velocities and circulation patterns. Increased water turbidity can briefly inhibit phytoplankton productivity. Increased biological oxygen demand may temporarily deplete dissolved oxygen levels, thus stressing nearby fish and aquatic invertebrate populations. Barren spoil banks or levees contribute to prolonged increases in the amount of suspended sediments as a result of surface erosion and runoff. Establishment of plant ground cover moderates such erosion.

Disturbances associated with channel construction or line installation typically cause short-term displacement of sensitive wildlife species from otherwise favorable nearby habitats. Displacement may affect feeding waterfowl concentrations and bird rookeries. Depending upon the sort of line or pipeline installation method (backfilled or open canal), vertebrate movement patterns may undergo short- or long-term alteration. Following activity completion, species reenter nearby sites if the areas remain essentially unaltered. However, human activity and associated noises during construction extend project effects beyond the boundaries of the immediate site.

4. Key attribute alterations

Alterations associated with line installation are functions of line size, site location, and placement methodology. Surface flowlines and supply lines and permanent overhead lines within road and access canal easements typically generate short-term impacts of limited areal extent that are quickly reclaimed by the system and generate little, if any, noticeable subsequent effects on consumer components. Gas and oil transportation pipelines, on the other hand, can modify important ecosystem attributes. Key alterations involve: (1) changes in land elevations, either through canal dredging and/or spoil deposition, both of which may lead to fundamental alterations of the existing marsh hydrological regime, and (2) direct removal of productive brackish marsh vegetation and dependent consumer groups as a result of dredging and spoiling activities. Resulting productivity losses may be either temporary or long term depending upon the installation technique used and the extent of site restoration.

Placement and operation of production facilities.

1. Activity sequence

Production aspects occur both at the wellsite and at a central treatment complex. Normally at a wellsite only slight structural modifications of the existing pad or drilling barge site are necessary to convert the well to production status. Placement of gathering flowlines from the well to the treatment facilities requires activities as described for the installation and maintenance of lines; these include line survey, limited vegetation clearing, line installation, and site restoration as required. If drilling was conducted from a floating barge, the barge is removed and replaced by a small elevated platform supporting the wellhead. Small-scale digging and pile driving are required.

Centralized treatment facilities are typically located on firm upland sites if they are available nearby. Otherwise, the complex is constructed in the marsh using the same construction techniques and processes employed in preparing a wellsite. Treatment and processing equipment may be supported on (1) a leveed pad dredged from the marsh; (2) a platform complex elevated on pilings and supplemented by stationary barges; or (3) a combination of the above. Brine-disposal lines are installed to transport brine to disposal wells or to adequate marine sites. Routine operation, maintenance, and repair of treatment, pumping, and storage equipment are frequently conducted within the confines of the pad site or on the platform/barge structures. Processing wastes are stored within the complex area, disposed of via flowlines, or transported off site immediately. Routine maintenance and operational trips are conducted by truck to sites accessible via levee roads or by small boat to sites accessible only be canal. Typical areal extent of a newly constructed production facility is approximately 0.4 ha (1 acre).

2. Primary ecological alterations

2.1 Trampling and crushing of vegetation due to construction machinery

2.2 Complete loss of vegetation within the pad site or platform complex

2.3 Permanent displacement and/or loss of consumer groups within the facility site

2.4 Increases in concentrations of suspended sediments and dissolved nutrients

2.5 Introduction of toxic materials into the site's water and soil systems

2.6 Displacement of sensitive wildlife species from adjacent areas due to treatment processes and constant human activity

2.7 Alteration of water flows in localized areas

3. Attribute alterations

Conversion of a well to production status creates few additional site alterations. In the case of a leveed pad, all activities occur near the wellhead and central pad area. Operation consists primarily of periodic maintenance and inspection visits. Equipment repair may occasionally require limited activity on the pad. Outlying portions of the pad revegetate following reduced activity levels. If drilling was conducted from a special barge, the capped wellhead is enclosed by a small elevated platform and the barge is subsequently removed. Construction of the platform and barge removal cause localized increases in suspended sediments. The effects, however, are very temporary and restricted in scope. Consequently, further considerations will not address the very small-scale alterations generated at the existing wellhead location, but will concentrate primarily on the ecological alterations uniquely associated with the construction and operation of a central treatment complex in unmodified marsh.

Attribute alterations are similar in scope but smaller in scale than for wellsite preparation. Site preparation for the treatment complex removes all biotic components within the construction boundaries through dredging, spoiling, digging, filling, and pile-driving activities. A direct loss of approximately 0.4 ha (1 acre) of sustaining habitat results for primary and secondary consumers. Food and cover losses are particularly significant for small mammals, local insect populations, and some aquatic invertebrates as proportionally larger portions of their resource base are removed or altered. The carrying capacity of the marsh for supporting secondary consumers such as the predatory mammals and birds, waterfowl, alligator, and estuarine fish is certainly reduced by such habitat alterations. The significance of such an isolated loss at the ecosystem level of consideration is unknown, however.

Reworking the marsh substrate to build ring levees and spoil pads, as well as placing pilings and other support structures, causes increased levels of suspended sediments, dissolved nutrients, water turbidity, and biological oxygen demand at the construction site. Subsequent weathering and erosion of barren spoil deposits and routine maintenance traffic through the access canals sustain these

alterations, but at reduced levels. Construction-associated increases are typically short term and are usually confined to the site area, especially if the surrounding marsh is densely vegetated with few or no open-water bodies. Open-water bodies or channels may facilitate extension of these effects over wider marsh areas, depending on local currents and flow velocities, but the affected areas are still small relative to the whole ecosystem.

Although care is exercised at the production complex to avoid release of toxic substances into the marsh, small-scale discharges of oil, gas, gasoline, assorted treatment chemicals, and brine inevitably occur in spite of the preventive and maintenance procedures instituted. Ecological alterations associated with large spills, discharges, and associated cleanup procedures are treated as a separate section. Toxicity of petrochemical hydrocarbons is a function of the quantity released, distillate fraction(s) discharged, and susceptibility of the biota to those fractions. The constant low-level release of toxic materials over long periods and their subsequent effects upon brackish marsh dynamics are less well understood and cannot be satisfactorily evaluated. Effects of occasional low-level discharges are probably never felt much beyond the immediate site, as certain microbial elements of the marsh muds can readily absorb and decompose small quantities. Brine may be introduced into the marsh unintentionally as a result of leakage from flowlines or storage facilities. Although plants and animals of the salt marsh can withstand salinities of up to 40 ppt, brackish species are unable to tolerate such high salt concentrations. Introduction of brine of high salt content and unnatural ion distribution stresses even salt marsh species to a point where survival is not possible. Marsh species are more capable of coping with gradual rather than sudden increases in salinity. Larval and juvenile stages of a species are particularly affected by high salinities, and stunted growth may occur. Plants may have very low germination rates. Much of the impact of brine effluent depends upon duration of discharge, quantity released, brine concentration, and brine temperature. Though some species are able to tolerate very high salinities, tolerance does not last long under such stressed conditions. The salinity tolerances of most species is driven down with increased brine temperatures.

Routine maintenance operations require regular visits to the complex. If access is accomplished over leveed roads, temporary increases of dust and noise result. Vehicular activity may disturb sensitive wildlife concentrations, causing behavioral changes. If equipment monitoring, maintenance, and repair requires the use of boats, water turbidity increases within the access canal due to resuspension of bottom sediments and erosion of canal banks. The extent of this increase depends upon the frequency of boat passage, boat size and speed, and canal dimensions. Continued high turbidity levels may inhibit phytoplankton productivity levels and stress local benthic populations.

Disturbance factors should be recognized as an important consideration because they extend project impacts beyond the boundaries of the immediate site.

4. Key attribute alterations

The key attribute alteration involves primarily the direct long-term removal of productive plant assemblages and those directly dependent consumer groups found within the production site. Consumer response is a function of the areal extent of the change, the size of the consumer's resource base, and its sensitivity to altered habitat conditions. Sensitive wildlife species may abandon otherwise favorable habitats because of operational and vehicle-associated disturbances.

The chronic effects of persistent toxic materials may be more important than localized acute effects.

Spills and cleanup.

1. Activity sequence

Accidental discharge of crude oil, gas, field brine, or other substances occurs as a result of equipment failure, improper equipment operation, or human error. Built-in safety mechanisms, if present, are activated automatically to limit the quantity of discharge. Field personnel, once aware of the spill or leak, immediately initiate procedures to confine discharges to the smallest possible area. If the discharged materials enter open-water bodies or intramarsh channels, then floating oil booms or surface dams are dispersed to contain the spill. Marsh buggies, air boats, and motor boats may be used for deployment trips and personnel transport. Skimmer or vacuum units mounted on trucks or barges may be used to collect floating oil and other buoyant petrochemicals. Straw or hay is used to adsorb smaller, less accessible quantities that vacuum trucks cannot remove. Specially manufactured absorbant sheets may be dispersed and then later collected by hand. Standing vegetation coated with oil may be flushed with water pumped through high-pressure hoses and hand cut and removed from the site or burned in place to remove contaminants. Oil-contaminated muds may be excavated with hand shovels or heavy machinery, depending upon site characteristics and spill size. Special dispersion techniques may be necessary to discourage use of contaminated areas by wildlife, primarily waterfowl and wading birds. Removal of contaminants signals completion of the cleanup phase and the beginning of site restoration procedures.

2. Primary ecological alterations

Alterations will vary according the spill size, toxicity of the chemical substances released, and cleanup methodology utilized.

2.1 Introduction of toxic materials into water and soil systems

2.2 Complete above-ground removal of vegetation in spill zone

2.3 Partial vegetation removal in adjacent areas during access and cleanup phases

2.4 Complete removal of selected consumer species in spill area

2.5 Increased concentration of suspended sediments and dissolved nutrients

2.6 Creation of pathways for increased saltwater inundation

2.7 Creation of pathways which increase freshwater runoff

2.8 Alterations of existing tidal drainage patterns

3. Attribute alterations

Plant assemblages are removed or altered by either (1) the toxic effects of spilled petrochemicals or brine or (2) the cleanup processes which follow.

Toxicity of oil pollutants varies with the petroleum fraction involved. In a decreasing order of toxicity are gasoline, diesel, bunker C, and crude. The most toxic oil products have the largest percentage of volatiles; therefore, they become less toxic very rapidly as the volatiles evaporate. Ironically, the detergents used to disperse oil spills are often more toxic than the spilled material.

Natural decomposition of an oil spill begins immediately and proceeds via several means. Depending on the temperature and wind velocity, the volatile fraction evaporates rapidly. Within 12 hr of crude oil spill, roughly 40 percent is evaporated or in the water column while 60 percent remains as a tarry slick. The oil can be

consumed by browsing invertebrates. Oil coats suspended particulate matter and sinks to the bottom, thus becoming an energy source for certain bacteria that are capable of oxidizing the oil. Thin layers of crude oil can be completely decomposed within two or three months.

The effect of an oil spill on the marsh depends on the size of the spill, the duration of the release, and the type of oil spilled. Prediction of a spill's severity is difficult because of many compounding factors. Fate of a spill depends on prevailing winds, water currents, and temperature. Toxicity to the biota depends on the temperature, salinity, and the life form and life stage exposed. Spill coverage of the marsh is a function of the tidal magnitude at that particular time.

A crude oil spill causes a die-back of marsh vegetation above the oil line within two or three days. Cleanup efforts have similar results. Plant species left with intact root systems and large food reserves recover within one yr; less tolerant species require more time. If large quantities of materials are not rapidly dispersed over wide areas, mobile consumers capable of avoiding contaminating substances leave the area. Less mobile consumers may be coated with oil or other noxious fractions and die. Food and shelter resources become so degraded as to provide only minor benefits to consumer groups which previously utilized the site. Birds, particularly waterfowl and wading species, contaminate their plumage by landing or wading in spilled oil. Bird mortality results from exposure (due to a loss of insulation properties of the plumage) or ingestion of toxic petrochemical compounds (swallowed when the birds attempt to clean oil from soiled feathers). Furbearers and other small mammals within the impacted area may experience similar difficulties.

Movement of men, marsh buggies, airboats, barges, outboards, and other cleanup equipment over and through aquatic marsh areas disturbs soft sediments, thereby increasing suspended sediments and dissolved nutrient concentrations. Similar movements on firmer substrates cause partial vegetation damage and rearrangement of surface configurations. Such alterations occur within, as well as around, the actual spill area. They are considered to be temporary and restricted in nature, and are of little consequence at the ecosystem level of consideration.

Cleanup techniques involving all or some of the following procedures include: (1) placement of floating booms or containment skirts; (2) dispersal and collection of absorbent/adsorbent materials; (3) burning; (4) excavation and removal of contaminated plants and soils; and (5) application of chemical dispersants or emulsifiers. Boom deployment by boat causes few, if any, environmental alterations. Deployment and subsequent collection of absorbent/adsorbent materials such as hay, straw, or specially manufactured plastic sheets

is usually accomplished with manual labor. Site alterations are restricted to vegetation trampling and small surface disturbances. Cleanup of residual oil deposits too small to remove efficiently with conventional collection techniques is accomplished by burning the contaminated site. Producers, and consumers which do not abandon the site, are removed. Fire accelerates biomass decomposition, thereby increasing the availability of soil nutrients. Removal of standing plant materials and sediments soaked with oils lowers the local land elevation (pathway 15) and could lead to new areas of standing water. The storage of unavailable nutrients is decreased slightly, but probably not enough to affect the ecosystem. Toxic components of the spilled material are prevented from affecting existing or future biotic elements when saturated substrates are excavated. It is generally agreed among investigators that chemical oil spill emulsifiers, dispersants, removers, etc. are very toxic to aquatic life. Not only are the chemical agents themselves toxic to aquatic invertebrates and vertebrates, but synergistic reactions occur which make a crude-oil/oil-spill-remover mixture much more toxic than either component separately.

Although cleanup activities may trample and crush extensive amounts of uncontaminated vegetation, the most significant alterations of the cleanup sequence are concerned with changes of the waterflow regime. Movement of marsh buggies and earthwork equipment associated with constructing emergency containment levees or drainage channels changes local land topographic features. Intramarsh circulation patterns may be altered as a result of drainage blockage (establishment of levees) or drainage enhancement (canal digging). Basic characteristics of the marsh's hydrologic regime are altered - average depth, duration of site submergence, and frequency of site exposure to the atmosphere. The nature of such changes are site specific, and areal magnitude is a function of the spill size. Plant alterations may result if the hydrologic regime is altered such that wide areas or critical waterways are permanently affected. Saltwater intrusion may result if the hydrologic regime is altered such that wide areas or critical waterways are permanently affected. Saltwater intrusion may be enhanced with diversion ditches or blocked with containment levees or dams. Likewise, freshwater runoff may be enhanced with ditching.

Disturbance factors should be recognized as an important consideration because they extend the project impacts beyond the boundaries of the immediate site.

4. Key attribute alterations

The primary alteration is the complete or partial removal of biotic components resulting from the effects of spilled oil and from several aspects of the cleanup procedure. Consumer response varies by species, size of the area affected, site characteristics, and resultant floristic changes. An oil spill has the potential to kill

thousands of waterfowl; contaminate shellfish; kill fish, crab, and bivalve larvae; foul bottom sediments; and kill emergent grasses. Cleanup methodologies determine site alterations that occur and whether subsequent biotic changes are temporary or long term. For example, spills and cleanup procedures restricted to aquatic areas would have only minimal effects on higher vegetated marsh sites. Marsh buggies and other surface vehicles would not be required; cleanup processes could be accomplished by outboard and/or airboats.

Potential alterations of importance to the ecosystem pertain to changes in land elevations as a result of emergency earthworks or the vehicular traffic required to contain or divert an extensive spill. Subsequent alterations in water circulation patterns can result.

Site shutdown and restoration.

1. Activity sequence

Completion of exploratory drilling, removal of production facilities, backfilling of pipeline ditches, and spill cleanup usually signal initiation of the shutdown and restoration phase. Permanent structures, euqipment, concrete foundations, pipes, surface flowlines and supply lines, well casings, drilling mud, and other artifacts of oil production are removed if they possess salvage or reuse value. Otherwise, only as much attention is paid to restoration procedures as is required by Federal and state regulations, lease stipulations, and general company policy. Typically, restoration includes removal and/or burial of toxic substances, refilling of all pits, knocking down or breaking earthen levees, leveling the site, and plugging or filling ditches. It is unusual to fill access canals. They are used as long as the wells are productive or the field is active, which may last several decades. During this period, the canal banks erode and widen, and spoil piles compact and subside. There is not enough fill material from the old excavation and maintenance spoil to refill the canal. In most instances, fill material would have to be barged to the site; this is often economically unfeasible. Many canals are simply abandoned. However, in areas where significant canal water movement has posed problems, canal plugs or wiers have been constructed to control water movement. Natural processes are typically relied upon to reestablish vegetative ground cover. Even though boards may be removed from well pads and leveed roads, the road/pad foundation is usually left intact. If major earthwork is required, then heavy construction machinery, barges, and/or marsh buggies are employed in a manner similar to that described for site access and wellsite preparation.

2. Primary ecological alterations

2.1 Temporary loss of producer biomass along flowlines, vegetated levees, and pad sites

2.2 Loss of consumer biomass in access canals and pipeline canals due to refilling procedures

2.3 Increase in producer biomass on formerly barren sites due to revegetation

2.4 Increase in suspended sediments and dissolved nutrient concentrations

2.5 Alteration of modified circulation patterns as a consequence of reestablishing former marsh flow regimes

3. Attribute alterations

Procedures which reestablish the surface contours existing prior to those topographic alterations generated by canal dredging, levee and pad construction, and pipeline activities are most effective in restoring basic site, as well as ecosystem, integrity. Flow patterns interrupted by levees and diversion canals are reestablished. Backfilling, canal plugging, levee grading, and levee breaching procedures remove or bypass such obstructions and facilitate restoration of the original flow patterns. Inherent properties of the water covering the brackish marsh, such as average water depth, frequency of inundation and exposure, and duration of submergence, effectively regulate the dominance of Spartina patens or Scirpus spp. and consequently determine the nature of the marsh fauna. Rectification of alterations caused by diking, ditching, and channelization help restore the balance of freshwater and saltwater inflows and degree of intramarsh mixing if the system has not been irreparably altered. Many aquatic invertebrates and fish species, particularly larval and juvenile forms, are dependent on certain salinity regimes for optimum growth and development. Restoration helps reestablish the initial salinity regime and thereby enhances the continued productivity of these components.

Reworking levees, filling in canals and pits, and removing surface flowlines destroys small quantities of producer biomass that may have become established on such sites during the operational life of the facility. Favorable cover types for select wildlife species which may have become established are also lost. Canal levees are the most important in this respect. Suspended sediments associated

with such earthwork and subsequent runoff from exposed substrates increase water turbidity levels in the activity area. Depending on site location, the effects may be restricted to the immediate area or distributed over a wider expanse. Plugging and/or filling ditches, canals, and other open-water cuts removes existing or potential aquatic environs for such consumer groups as the aquatic invertebrates, fish, alligator, waterfowl, and some wading bird species. Knocking down mounded substrates and reestablishing former surface contours, however, may reform surface depressions and low sites for the same consumer groups.

Artificial revegetation facilitates rapid reintroduction of producer biomass on denuded areas, thereby speeding the return to initial site conditions. However, even revegetated areas may be less productive than were the original producers, until root-matting and other restorative processes between the plants and soil have reestablished. Native plant species provide food and cover resources most compatible with requirements of nearby consumers and have the greatest probability of successful establishment. Vegetative cover regulates surface-water runoff from higher marsh sites, such as leveed roads, pads, and other artificially elevated sites, and also moderates the scouring effects of currents and boat-generated waves on barren substrates. A potential source of water turbidity and sedimentation is thus controlled. Revegetation helps return unproductive marsh areas to some level of former productivity through reestablishment of the detrital-nutrient pathway, which benefits detrital feeders, as well as enhances the substrate for subsequent plant development.

Removal of petrochemical and other waste products from storage pit areas, from impregnated substrates around production facilities, and from spill areas prevents potential long-term input of pollutants, toxins, and other noxious substances into the marsh and their possible transfer through the food chain. Removal of soil toxins speeds natural plant recovery processes.

Land management objectives regulate which specific consumer groups or plant assemblages are encouraged by planting techniques, filling and removal processes, and other restoration procedures. These objectives also determine, to a large extent, how extensive efforts will be or in what direction restoration will proceed.

Restoration typically occurs on sites which previously supported various types of displacement-producing activities or sites which have just recently been disturbed. Displacement, if it were to occur, has already been effected by such prior processes. Additional effects are probably minor and temporary by comparison. Site shutdown and restoration should, if successful, encourage the eventual return of sensitive wildlife species.

4. Key attribute alterations

Restoration of the hydrologic regime is the pivotal aspect of site rehabilitation, which controls or combines with other less critical regulatory parameters to ultimately determine the health and productivity of the brackish marsh environment. The water regime determines how much water covers the marsh, how long it is submerged, how frequently the substrate is exposed above the water table, and what the salinity range may be. Standing water also provides cover for numerous aquatic and semiaquatic consumer species, and also provides a mechanism for transporting detritus and dissolved nutrients. Second-order effects include regulation of gaseous exchanges between substrate and plants and the regulation of nutrient availability. Reestablishing prior drainage pathways, surface contours, and unblocking former sources of water inflow by filling in or plugging canals, removing or breaching continuous elevated levees and spoil banks, and revegetating barren sites facilitates hydrologic restoration.

Fresh Marsh

Seismic preexploration.

1. Activity sequence

Surveyors enter the marsh by truck, marsh buggy, vessel, or foot, stake the lines, and mark the areas where shot holes and geophones will be placed. Vegetation may be cleared along a path 3 to 4 m (10 to 15 ft) wide. A drilling truck, buggy, or vessel and one or two support vehicles enter next; holes are drilled, charges and recording equipment are placed, and shots are fired. Geophones are retrieved and placed for the next series of shots. After completion of an entire shot line, the holes are plugged and the crew exits.

2. Primary ecological alterations

2.1 Creation of ruts or depressions in the land surface

2.2 Trampling and crushing of vegetation along shot line path

2.3 Localized change in direction of water flow

2.4 Creation of pathway for increased rate of flow of runoff

2.5 Creation of pathway for increased inundation (saltwater or freshwater)

3. Attribute alterations

The movement of work crews and marsh vehicles tramples and crushes vegetation in a zone wider than that cleared for shot placement. Vegetation may be completely uprooted and destroyed in some cases; and extent and degree of destruction are dependent on the hydrological conditions of the area. Because meadow and emergent vegetation types are located on higher elevations, they are more susceptible to such destruction; submergent and floating vegetation types are less likely to be completely removed from production. Any loss results in an immediate decrease in food and cover for the consumers in the area. In cases where the existing vegetation is a pest species, destruction may be considered beneficial for several reasons: (1) it reduces the reproductive potential of the pest species, (2) it opens dense stands of vegetation and increases the "edge effect," and (3) it might allow the zone to be invaded by more desirable species. The total area affected is usually small in comparison to the remaining area of undistrubed marsh, and the effects of transpiration, evaporation, sediment trapping, fire, available nutrients, and peat accumulation are insignificant.

The depth and number or ruts created by marsh vehicles are dependent upon the total number of trips and the degree to which vehicles retrace existing tracks. In areas that are submerged continuously (or nearly so), the depressions are less likely to significantly alter water movement patterns. In such regions, confinement of marsh vehicle traffic to a narrow corridor may be wise. However, in areas of higher elevation, deep ruts resulting from retraced trails will form depressions for the movement of water and, if deep enough, may result in standing bodies of water during wet seasons. The orientation and depth of the depressions determine whether they (1) remain for long periods of time and (2) alter the water regime of a given area of land by increasing or decreasing the frequency of submergence/ emergence, average depth, and duration of submergence. Areas dominated by maiden cane may be replaced by stands of rushes, sedges, canes, or other emergent species when the frequency and/or duration of submergence inceases. The converse may occur when frequency and/or duration of submergence decreases. Although the total area affected is site specific, it is usually small when compared to the total area of undisturbed marsh. Because both of these vegetation types support the same consumers, no significant changes in fauna would be expected.

The depressions allow a faster runoff of surface and standing water in localized areas. The long-term effects on suspended sediments and nutrients are slight. If vehicle tracks occur in areas of the marsh where isolated ponds exist, intramarsh circulation could be affected.

Depressions could connect individual water bodies and increase the intermixing of their contents. Waterfowl and wading bird use would be expected to increase in these new depressions with standing water. At the ecosystem level, however, this increase is insignificant.

The degree and significance of wildlife displacement resulting from all preexploration activities are impossible to predict or quantify. The point where noise and human presence may change temporary and partial displacement to permanent and complete displacement is unknown, but this factor should be considered during all phases of activities since it extends the effects of the project beyond the boundaries if the immediate site.

4. Key attribute alterations

The alteration which leads to the most significant impacts on the ecosystem is the creation of depressions in the land surface. Although long-term effects on vegetation types may result from changes in water-flow regimes, the areal extent of surface damage and impact on consumers are minimal. As discussed above, direct vegetation removal may be beneficial in some instances.

Gravity preexploration.

1. Activity sequence

Gravity surveys may involve the placement of a relatively small piece of equipment on the marsh surface. This unit (the gravity meter) may be carried to stations by truck, marsh buggy, boat, or foot. Survey crews are not required since data need not come from predetermined locations. It is necessary only to plot the locations of the data collection stations on a map. A small amount of vegetation is trampled during the placement of the gravity meter. Several minutes are required for data collection; the unit is then packed and carried to the next station. The number of stations required for a gravity-meter survey is less than the number of shot holes necessary for a seismic survey. Two men with adequate transportation can efficiently conduct a gravity-meter survey.

2. Primary ecological alterations

2.1 Creation of ruts or depressions in the land surface

2.2 Trampling and crushing of vegetation at the station locations

2.3 Localized change in direction of water flow

2.4 Possible creation of pathway for increased rate of flow or runoff

3. Attribute alterations

The movement of vehicles and workers over the marsh surface crushes vegetation. The vegetation may be completely uprooted and destroyed in some areas depending upon the soil mositure conditions and the type of transportation that is utilized. The vegetation loss results in an immediate decrease in food and cover for the consumers in the area. The total area affected is usually very small in comparison to the remaining area of productive vegetation because (1) the gravity meter is quite portable, (2) data stations are not located along predetermined straight lines, and (3) the stations are not regularly spaced. Stations may frequently be reached by boat or by foot; a maximum of one lightweight surface vehicle is necessary for the entire operation. Furthermore, this vehicle need not travel straight-line paths across the marsh surface; it can make maximum use of existing roads or canals. Therefore, the effects of transpiration, evaporation, sediment trapping, fire, available nutrients, and peat accumulation are negligible, as the actual affected areas are very small.

The above discussion indicates that total vehicular traffic associated with gravity surveys is less than that associated with seismic surveys. Nevertheless, any marsh-surface vehicle may alter local land elevations. Ruts resulting from their use may form depressions for the movement of water and, if deep enough, may result in standing bodies of water during wet seasons. The orientation and depth of the depressions determine whether they (1) remain for long periods of time and (2) alter the water regime of a given area of land by increasing or decreasing the frequency of submergence/emergence, average depth, and duration of submergence. Areas dominated by maiden cane may be replaced by stands of rushes, sedges, canes, or other emergent species when the frequency and/or duration of submergence increases. The converse may occur when frequency and/or duration of submergence decreases. Although the total area affected is site specific, it is usually small when compared to the total area of undisturbed marsh. Because both vegetation types support the same consumers, no significant changes in fauna would be expected. All effects on suspended sediments, nutrients, and runoff are negligible.

Disturbance factors should be recognized as an important consideration because they extend the effects of the project beyond the boundaries of the immediate site.

4. Key attribute alterations

The alteration which leads to the most significant impacts on the ecosystem is the creation of depressions in the land surface. Although long-term

effects on vegetation types may result from changes in waterflow regimes, the areal extent of surface damage and impact on consumers are minimal.

Site access by leveed road.

1. Activity sequence

Surveyors enter the marsh by truck, marsh buggy, or foot, stake the route, and leave the area. The staked route may or may not be the most direct pathway to the wellsite location. A dragline with board mats enters the site to excavate a continuous borrow pit and place the spoil to form a long continuous levee. The dragline proceeds along the marsh surface on that side of the levee from which the fill is borrowed and parallel to the levee route. The fill is placed in a continuous pile 10 to 13 m (30 to 40 ft) wide with an approximate slope of 30^{0}. Three to 4 m (about 10 ft) usually remains as a berm, that distance between the foot of the levee and the edge of the borrow pit. The dragline shapes the material only approximately and then leaves it to drain and dry. A board road is placed on the top of the levee after synthetic material is laid to control water seepage. The dragline may exit by traveling on board mats, or if the roadway is completed, it may be loaded on a large equipment-moving vehicle.

2. Primary ecological alterations

2.1 Creation of ruts or depressions in land surface - marsh buggy tracks and/or tracks from other accessory equipment

2.2 Loss of vegetation along road pathway due to excavation and covering

2.3 Increases in concentrations of suspended sediments and dissolved nutrients

2.4 Blockage of normal surface-water flow patterns by levee

2.5 Creation of a pathway 2 to 5 m (6 to 15 ft) deep parallel to levee for more rapid upland drainage and standing water from marsh

3. Attribute alterations

Surveyors and their equipment trample and crush vegetation outside the zone to be excavated, but the area involved is small. Furthermore, much

of this trampled area may be covered by fill as construction proceeds. A more significant vegetation loss occurs during excavation of a 5-m (15-ft) wide borrow ditch and burial of some bordering marsh by fill. The width of the latter zone is 10 to 13 m (30 to 40 ft). This direct loss results in an immediate decrease in food and cover for the consumers in the area. In cases where the existing vegetation is a pest species, flora destruction may be considered beneficial for several reasons: (1) it reduces the reproductive potential of the pest species, (2) it opens dense stands of vegetation and increases the "edge effect," and (3) it might allow the zone to be invaded by more desirable species. The total area affected is usually small in comparison to the remaining area of undisturbed marsh, and the effects on transpiration, evaporation, sediment trapping, fire, available nutrients, and peat accumulation are insignificant. However, as each new ditch and wellsite is excavated, the carrying capacity of the intact marsh is decreased. Cumulative effects are unknown, and the threshold point (where one additional road will significantly affect the marsh) is obscure.

The depth and number of ruts by marsh vehicles are dependent upon the total number of trips and the degree to which vehicles retrace existing tracks. In areas that are submerged continuously (or nearly so), the depressions are less likely to significantly alter water movement patterns. In such regions, confinement of marsh vehicle traffic to a narrow corridor may be wise. However, in areas of higher elevation, deep ruts resulting from retraced trails will form depressions for the movement of water and, if deep enough, may result in standing bodies of water during wet seasons. The orientation and depth of the depressions determine whether they (1) remain for long periods of time and (2) alter the water regime of given area of land by increasing or decreasing the frequency of submergence/ emergence, average depth, and duration of submergency. Areas dominated by maiden cane may be replaced by stands of rushes, sedges, canes, or other emergent species when the frequency and/or duration of submergence increases. The converse may occur when frequency and/or duration of submergence decreases. Although the total area affected is site specific, it is usually small when compared to the total area of undisturbed marsh. Because both of these vegetation types support the same consumers, no significant changes in fauna would be expected.

The depressions allow a faster runoff of surface and standing water in localized areas, but this drying effect on adjacent regions is usually small. The long-term effects on suspended sediments and nutrients are slight.

If vehicle tracks occur in areas of the marsh where isolated ponds exist, intramarsh circulation could be affected. Depressions could connect individual water bodies and increase the intermixing of their contents. Waterfowl and wading bird use would be expected to increase in these new depressions retaining standing water. At the ecosystem level, however, this increase is insignificant.

The movement of the dragline over the marsh also crushes some vegetation, although the use of wooden mats minimizes uprooting of vegetation.

Suspended sediment and nutrient increases that accompany the excavation are of short duration. The erosion of levee banks will lead to long-term turbidity increases; the degree and extent of these phenomena are site specific.

The ditch created by the borrowing of fill remains for a long time. Its presence diverts some upland drainage from its normal path over the marsh surface; also, the adjacent areas drain more rapidly. Both of these phenomena tend to make adjacent marsh regions drier than normal. The average depth of standing water on the marsh decreases, while the frequency of submergence/emergence of plants increases.

The decrease in duration of submergence and possible increase in turbidity can result in a decrease in production of phytoplankton on the marsh. This decrease in production along with the decreased duration of standing water will decrease the food for aquatic invertebrates and vertebrates. These changes decrease the suitability of the area as habitat for species such as alligator, waterfowl, and wading birds that prefer wetter conditions.

The increase in water depth in the borrow channel, however, may provide favorable conditions for phytoplankton and suitable habitat for the consumers mentioned above. In general, though, the areal increase in favorable habitat will be smaller than the aeral decrease resulting from the indirect effects of levee building.

The decrease in duration of standing water and increase in frequency of emergence will allow better gaseous exchange between the atmosphere and the soil. This may give a slight competitive advantage to meadow-type vegetation over emergents; however, no significant changes in fauna would be expected because both plant assemblages support the same consumer groups. Effects on other consumers are thus minor.

The above discussion is oriented toward phenomena in a natural coastal fresh marsh. Impoundments which create artificial fresh marshes involve special circumstances that are dependent upon specific management techniques. The discussion concerning effects arising from decreases in land elevation may not be applicable; the considerations contained in the section of this report dealing with site access by canal may be more relevant.

Although the above discussion assumes the fresh marsh is far removed from brackish or saltwater influences, there may be specific cases where this is not true. In those instances where marine-water inundation may occasionally occur, the considerations and discussions must be appropriately

tempered. In general, inundation will affect the system by adding salts, mineral sediments, and nutrients to the highly organic (peat) soils. Changes in vegetative composition depend upon the frequency and extent of inundation by saline or brackish water.

The degree and significance of wildlife displacement resulting from leveed road construction activities is difficult to predict though the effect is short term due to the rapid rate of construction (0.1 to 0.5 km per day). The disturbance due to construction is likely less than that due to the long-term continued use of the roadway over many years.

4. Key attribute alterations

The key alterations involve the digging of the borrow pit and disruption of flow patterns within the marsh. Direct losses of vegetation always occur; the areal extent and impact on consumers are minimal. However, significant secondary changes may be induced by the altered regimes of water flow.

Site access by canal and wellsite dredging.

1. Activity sequence

Surveyors enter the marsh by vessel, marsh buggy, or on foot, stake the wellsite location and access route, and leave the area. The pathway may or may not be the most direct one possible. Usually there is no need to clear vegetation, but vegetation may be trampled and crushed in adjacent zones.

Site location, equipment availability, spoil placement requirements, and economic factors may dictate which type and size of dredged is used in each phase of the operation. In a fresh marsh, any new canal is usually an extension or branch of an existing canal. Therefore, a barge-mounted bucket dredged or a hydraulic dredge may be used. Alternatively, a track-mounted bucket dredge may be employed. Spoil is placed on both sides of the channel and completely around the well site in most cases. Canal depths must be about 3 m (8-10 ft); typical widths approach 23 m (70 ft); a 10-m (30-ft) berm typically exists between the canal edge and the inside foot of the continuous spoil banks on both sides of the canal.

Small vessels, crew boats, supply boats, and tugs may move to the dredging site daily. Alternatively, marsh buggies may be used for these functions. After the wellsite location is dredged (usually 50 by 115 m, or 150 by 350 ft), all equipment moves out of the area. Redredging may be necessary once every six months to once every five yr.

2. Primary ecological alterations

2.1 Creation of depressions in land surface by marsh vehicles

2.2 Loss of vegetation along canal route due to excavation and covering

2.3 Creation of a body of standing water about 3 m (8-10 ft) deep

2.4 Increases in concentrations of suspended sediments and dissolved nutrients

2.5 Blockage of normal waterflow pathways

3. Attribute alterations

Surveyors and their equipment trample and crush vegetation outside the zone to be excavated, but the area involved is small. Furthermore, much of this trampled area may be covered by spoil as the dredging proceeds. A more significant vegetation loss occurs during excavation of a 23-m (70-ft) wide canal and a 0.58-ha (1.2-acre) wellsite and burial of bordering marsh by spoil. Up to 0.1 km of marsh per km of channel may be covered by spoil from the excavation, though the area of the latter zone is dependent upon the type of spoil disposal technique. This direct loss results in an immediate decrease in food and cover for the consumers in the area. In cases where the existing vegetation is a pest species, flora destruction may be considered beneficial for several reasons: (1) it reduces the reproductive potential of the pest species, (2) it opens dense stands of vegetation and increases the "edge effect," and (3) it might allow the zone to be invaded by more desirable species. For single canals, the total area affected is usually small in comparison to the remaining area of undisturbed marsh, and the effects on transpiration, evaporation, sediment trapping, fire, available nutrients, and peat accumulation are limited. However, as each new canal and wellsite is excavated, the carrying capacity of the intact marsh is decreased. Cumulative effects are unknown, and the threshold point (where one additional canal will significantly affect the marsh) is obscure.

The depth and number of ruts created by marsh vehicles are dependent upon the total number of trips and the degree to which vehicles retrace existing tracks. In areas that are submerged continuously (or nearly so), the depressions are less likely to significantly alter water movement patterns. In such regions, confinement of marsh vehicle traffic to a narrow corridor may be wise. However, in areas of higher elevation, deep ruts resulting from retraced trails will form depressions for the movement of water and, if deep enough, may result in standing bodies of water during wet seasons. The orientation and depth of the depressions determine whether they (1)

remain for long periods of time and (2) alter the water regime of a given area of land by increasing or decreasing the frequency of submergence/emergence, average depth, and duration of submergence. Areas dominated by maiden cane may be replaced by stands of rushes, sedges, canes, or other emergent species when the frequency and/or duration of submergence increases. The converse may occur when frequency and/or duration of submergence decreases. Although these vegetative groups may shift in relative importance because of changes in submergence, no significant changes in fauna would be expected since the vegetation types support the same consumers.

The depressions might allow a faster runoff of surface and standing water in localized areas, but this drying effect on adjacent regions is usually small. The long-term effects on suspended sediments and nutrients are slight.

If vehicle tracks occur in areas of the marsh where isolated ponds exist, intramarsh circulation could be affected. Depressions could connect individual water bodies and increase the intermixing of their contents. Waterfowl and wading bird use would be expected to increase in these new depressions retaining standing water. At the ecosystem level, however, this increase is insignificant.

Increases in suspended sediments associated with excavation are transient and are confined to a relatively small area, especially if temporary plugs are placed at the mouth of the canal. Long-term effects are results of erosion of canal banks and spoil deposits. Erosion of the former is proportional to the speed and amount of boat traffic. Erosion of spoil deposits will proceed until they become vegetated by pioneering plant groups. This ecesis will usually occur within two years or less, depending upon the edaphic conditions and sources of seed stock. Increases in suspended sediments associated with marsh vehicle traffic also have short-term and long-term components; effects of both components are usually less than effects associated with canal erosion.

The canal creates a large continuous route for increased inundation by adjacent waters, either fresh or brackish. The pattern and height of spoil placement are the most important factors that determine if this new standing-water body is isolated from the contiguous marsh, or whether its waters may inundate extensive marsh areas. In addition, the spoil deposits paralleling the canal and wellsite interrupt existing water flows. This blockage may result in localized changes in runoff and standing water. Thus, the total area affected is site specific and may range from the construction site alone to much larger marsh areas if important drainages are altered.

Replacement of stands of fresh marsh vegetation by bodies of standing water (canals, wellsites, and bugg tracks) results in increases in

standing-water habitat for phytoplankton, aquatic invertebrates, and vertebrates. Such increases could prove beneficial for some consumers having habitat requirements for open water, especially if little standing water was available originally. However, if the canal construction results in significantly less vegetation, particularly in an area greater than the construction site alone, effects on consumers may be quite negative. The areal increase of favorable habitat is usually less than the areal decrease resulting from indirect effects of canal construction plus marsh vehicle traffic. Turbidity that results from chronic erosion decreases the suitability of the standing water as habitat for phytoplankton, aquatic vertebrates, and aquatic invertebrates.

The above discussion is oriented toward phenomena in a natural coastal fresh marsh. Impoundments which create artifical fresh marshes involve special circumstances that are dependent upon specific management techniques. The discussion concerning effects arising from decreases in land elevation may not be applicable. However, effects of blocked water flows and turbidity increases may be especially pertinent.

Wildlife displacement resulting from these construction activities is difficult to predict. However, displacement is short term, as construction proceeds at rates up to 300 m per day. While noise and human presence extend the effects of project construction beyond the boundaries of the immediate site, the disturbance may be less than the effects of daily boat traffic over a period of years during drilling and production phases.

4. Key attribute alterations

Key attribute alterations induced by this phase of oil and gas operations involve changes in land elevations. First-order effects include removal of vegetation and creation of a standing-water habitat. If the new water body is not confined by spoil and/or natural topographic features, much wider areas of marsh may be affected by occasional saltwater intrusion or deeper average water depth. Long-term changes in vegetation and consumer groups could occur. Long-term turbidity increases may also result.

Canal construction requires spoil placement; this results in higher land elevations. Burial of flora is less significant than possible alterations of waterflow regimes. Poorly planned placement of spoil may result in blockage of existing upland drainage and/or runoff patterns. These blockages will lead to long-standing changes in types and/or amounts of vegetative cover, followed by corresponding changes in consumers.

Wellsite preparation and operation for leveed marsh-floor locations.

1. Activity sequence

The equipment and techniques utilized during construction of the access road are also employed during preparation of the wellsite. After surveyors have staked the areas, the dragline constructs a ring levee around the entire site by utilizing borrow from pits located exterior to the levee. Outside dimensions of the levee are usually less than 120 by 120 m (400 by 400 ft). Initial levee height is about two m (six ft); shrinkage occurs through time. A sump ditch is excavated immediately inside and parallel to the entire levee. A board foundation similar to that laid for the access road is placed over the wellsite area. Internal earthworks are constructed and shaped by various pieces of equipment, and the pad site is surfaced in a manner similar to that used for the access road. A variety of auxiliary equipment and materials is moved to and stored in the area prior to arrival of heavy drilling equipment. Drilling activities require one to three months. Test results indicate whether the well should be put into production or should be capped and shut down.

2. Primary ecological alterations

2.1 Complete vegetation removal inside the ring levee and in borrow pits outside the ring levee

2.2 Increases in concentrations of suspended sediments and nutrients

2.3 Creation of pits and a ring levee which alter water flows in localized areas

2.4 Introduction of toxic materials to water and soil systems

2.5 Extended displacement of wildlife from entire area adjacent to roadway and wellsite

3. Attribute alterations

Construction of the wellsite is usually an extension of construction of the access road; the dragline merely continues operation, excavating disjunct borrow pits to build the ring levee. This work and the auxiliary preparation of the wellsite interior removes vegetation and associated insects from a maximum of 1.4 ha or 3.5 acres. This removal represents a loss of food and cover for all the remaining consumer groups: waterfowl, wading and shorebirds, mammals, alligator, aquatic vertebrates and invertebrates, and insectivorous birds.

Short-term increases in suspended sediments and nutrients result from construction activities. Longer term increases resulting from erosion of the ring levee are of minor consequence. Neither the short-term nor the long-term increase has a large effect on the surrounding area, especially if the levee surface revegetates quickly.

The ring levee may influence water flows by isolating/filling depressions or blocking small drainages. For a single wellsite, the effects are usually localized and limited when compared to (1) the remaining unaffected marsh and (2) the effects of road construction. The exterior borrow pits can affect a larger area of marsh than the ring levee. The zone(s) affected depends upon the placement pattern, depth, and surface area of these pits. They may remain as isolated ponds of standing water which collect runoff via intercepted drainage, or they may become interconnected due to drainage channels and/or consumer use (compaction of pathways between ponds). The drying effect upon the marsh soil of this increased drainage may or may not lead to vegetation changes in adjacent lands. However, unless major drainages are involved, the total area affected is little more than the construction site, and the impacts on the functioning of the ecosystem are small.

Replacement of marsh vegetation and soil by deep borrow pits results in increased habitat for species preferring deeper aquatic areas. However, net production of organic material per unit area declines with loss of rooted marsh plants. Alligators, waterfowl, and wading and shorebirds may increase their use of these ponds if human activity is minimal, turbidity is low, and production of primary consumers is high. At the ecosystem level of organization, however, these changes are small and of little consequence.

During this phase of operations (one to three months), the water and soil systems are exposed to a wide variety of pollutants from drilling mud, sump discharge, and vehicle and equipment waste (exhausts, oil, grease, gasoline). The kinds and amounts of these materials and the number of site-specific variables involved make prediction of their effects difficult. Spills and cleanup operations are treated in a later phase of this discussion.

Unlike the previous phases of activity, the preparation and operation of a wellsite involves continuous movement, noise, and long-term distruption of sensitive wildlife species. Consequently, the activity extends the effects of the project beyond the boundaries of the immediate site and for a protracted period.

4. Key attribute alterations

They key attribute alterations include direct removal of vegetation and consumers, localized changes in land elevation, and introduction of

pollutants. Since the area affected by excavation is small (relative to the unmodified marsh), the loss of food and cover for dependent consumers is less extensive than losses caused by the access route. The changes in land elevations can influence water flow regimes, but the total area affected by the pad site is usually minor in comparison to the undisturbed marsh.

Because the persistence and potency of spilled components is highly variable, the extent of impacts from pollutants is not predictable. Since the effects of sublethal levels of persistent pollutants are not catastrophic (as is the case in a blowout or major spill), The toxins may permeate large numbers of individuals and species before damage is noticed. By this time, affected organisms and waterflows will have served as agents of dispersal, so areas much larger than the wellsite may be affected.

Installation and maintenance of lines.

1. Activity sequence

Lines associated with oil and gas activity may be separated into three categories based on similarities of characteristics: (1) temporary surface lines to supply drilling sites with water and gas; (2) permanent or temporary overhead electrical lines to supply electrical and phone service to production, treatment, and pump station facilities; and (3) permanently buried lines which transport gas and oil to distribution or refining centers. The activity levels required for each line type vary according to category, and they range from simple to complex.

Water, gas, and other lines brining supplies to the wellsite are usually laid on the surface, typically paralleling existing access roads or canals. Flowlines, carrying crude to the processing center or brine to disposal wells, are other types of surface lines typically placed alongside leveed roads and access canals. Lines are small and are usually connected and placed by hand. Equipment is provided by trucks or barges that use existing access routes.

Where surface lines cross unmodified marsh, a survey crew enters on foot, by boat, or by marsh buggy, depending upon the length of the line; the crew clears and stakes the alignment. Equipment is provided by marsh buggy. Lines are usually connected and placed by hand. When crossing open-water areas (canals, bayous, ponds, etc.), supply lines and flowlines are either buried in the bottom or elevated atop support pilings. Draglines or jetting barges are required for the burying procedures. Placement of supports for elevated flowlines is accomplished by marsh buggy, boat, or hand operations. Site characteristics such as water depth and areal expanse determine what field equipment is required.

Overhead electrical lines typically parallel existing access corridors, and placement of lines requires equipment for placing support poles and stringing line. A tractor or backhoe operating from a leveed road or access canal may perform these activities. Holes are dug and poles are placed and anchored. The site is then abandoned.

Installation of transport lines 20 to 150 cm (8 to 60 inches) in diameter requires a more complex series of activities. Lines are buried in coastal fresh marshes using either the push or flotation method. Both methods require a survey crew to partially clear and stake an alignment (usually a small area) which typically follows the shortest straight-line route between points. Access is provided by marsh buggy or boat. Pipeline installation through inland fresh marshes requires a set of very different techniques which are determined by the site characteristics. A barge-mounted hydraulic or bucket dredge may be used in deepwater sites. In shallow-water areas having firm soils, a dragline or marsh buggy dragline is utilized.

If the push method is utilized, which is normally the case where the marsh substrate is firm enough to support the equipment, a dragline on mats or a buggy-mounted backhoe follows the survey crew and excavates a ditch 2 to 3 m (4 to 6 ft) deep and 3 to 4 m (8 to 10 ft) wide. Spoil is piled continuously along one or both sides. A specialized stationary barge, located in a dredged slip, assembles the pipe sections and pushes the line down the channel; the pipe is supported by floats and guided by a marsh buggy. Once positioned, the line is sunk in place by removing the floats. Typically, approximately one m (four ft) of water will remain above the pipe. The ditch may be left open, but it is more frequently backfilled by the dragline. If backfilling is not performed, an open-water canal bordered by one or two continuous spoil levees remains. Backfilled routes appear as straight shallow depressions due to subsequent spoil shrinkage and subsidence. When small watercourses are crossed, earthen plugs are placed to prevent lateral water flow down the ditch. Traversal of larger water bodies (canals, streams, rivers) requires the use of dredges or jetting equipment. Easement widths range from about 10 to 50 m (30 to 150 ft), depending upon the line size.

If the flotation method of pipe laying is utilized, which is often the case where the marsh substrate is too unstable to support installation equipment, a barge-mounted bucket or hydraulic dredge excavates the ditch. A canal 12 to 15 m (40 to 50 ft) wide and 2 to 3 m (6 to 9 ft) deep is necessary to provide access for the pipelaying equipment. A smaller deeper ditch is dredged within the canal for actual line placement. Spoil is placed along each side of the canal, generally 10 to 15 m (30 to 40 ft) away from the canal edge. Gaps in the spoil levees may or may not be provided. Levee dimensions depend upon canal width and depth (which determine the quantity of spoil) and spoil stability. A levee may be 1 to 2 m (3 to 5 ft) high and possess a base width of 17 to 28 m (50 to 85 ft). The pipe is assembled on and laid by the floating barge which travels the length of the line. In order to prevent drainage, erosion, and navigation traffic, earthen plugs, dams riprap, or bulkheads may be

required wherever a canal intersects another waterway. Whenever open water is traversed, the same equipment is used, although only a trench will be dredged. If a hydraulic dredge is used, spoils may be pumped to nearby land, dispersed over the adjacent area, or piled upon in a spoil island. Normally, flotation canals are not backfilled due to their large size. Straight open-water canals flanked by low spoil levees are the final product of the flotation method.

Inland fresh marsh sites too small or shallow to permit use of barge-mounted dredges may require the use of a tracked dragline moving over wooden mats or a marsh buggy dragline. A marsh buggy dragline consists of a dragline mounted on a marsh buggy carriage similar to that used to carry seismic equipment. It is a motorized tracked vehicle equipped with large flotation pontoons. A ditch is cut for floating in the pipe, thus eliminating the necessity for dredging a full-scale canal to accommodate a pipeline laying barge. While this type of operation produces far less spoil, marsh buggy tracks often cause pronounced changes in the marsh surface.

Once pipelines are pressure checked and operating, they are periodically inspected for leaks; boats, marsh buggies, or aircraft may be employed. The inspection equipment utilized and traffic frequency depend on the nature of the pipeline, its size, and the local marsh conditions.

2. Primary ecological alterations

2.1 Partial vegetation loss within line easement due to trampling and crushing effects of construction machinery

2.2 Complete loss of vegetation within a canal zone 10 to 100 m (30 to 300 ft) wide and on disjunct spoil disposal areas

2.3 Partial or complete removal of consumer groups, depending on the type of line placement methodology utilized

2.4 Increased concentration of suspended sediments and dissolved nutrients

2.5 Blockage or alteration of normal waterflow pathways

2.6 Alteration of surface elevation

3. Attribute alterations

Attribute alterations associated with line installation vary widely and depend on the type and size of line, site location, and placement methdology. Three general categories of lines, segregated according to the similarity of ecological effects, are described: (1) surface supply and flowlines, which provide drilling sites with water and gas or transport well products to treatment or disposal facilities; (2) permanent overhead electrical lines to supply electrical and phone service to production, treatment, and pump station facilities,; and (3) permanently buried gas and oil pipelines, which transport products to distribution or additional refining centers.

In many instances, surface supply lines and flowlines and overhead electrical lines flollow existing leveed roadways or access canals. Maintenance and repair are thus facilitated. Associated ecological alterations (trampling of vegetation, localized water turbidity, etc.) are typically small in magnitude, very localized in effect, and occur in already altered locations. Effects attributable to line installation that exceed or significantly contribute to the effects of leveed roads or canals are few. Thus, when such lines closely parallel existing marsh roads or dredged access canals, the installation alterations are considered to be of minor consequence to the ecosystem as compared to the effects produced by prior access-associated activities.

However, when surface flowlines or supply lines require overland routes through unmodified fresh marsh, the magnitude of attribute alterations increases. Where the marsh is fairly shallow, marsh buggies transport work crews and supplies along the line. Emergent vegetation is trampled and crushed as the surface lines are connected and laid. Depending upon soil moisture conditions and the number of vehicle traverses (typically restricted to two or three trips), the vegetation may be completely uprooted and destroyed in some localized areas. An immediate loss of wildlife food and cover resources results, but such small losses represent relatively minor alterations for most mammalian and avian species due to the restricted areal extent of the line as compared to adjacent unmodified areas. The effects on the detrital cycle and changes in the waterflow regime produced by the vehicular traffic are considered to be of minor consequence to the ecosystem for similar reasons. Heavy vehicular traffic, however, may increase waterflow alterations such that subsequent vegetative changes occur.

A relatively small amount of dredging may be necessary where small surface lines cross existing watercourses. The concentrations of suspended nutrients and sediments are temporarily increased in areas near the site.

When large open-water marsh areas are encountered, it is less expensive and usually easier to route small surface flowlines around such natural features. This is accomplished by using existing road and/or canal

levees. Lines are usually laid directly on the levee shoulder or toe. Installation causes few additional alterations to such disturbed sites.

Installation of a major gas/oil pipeline generates many alterations similar to those associated with dredging an access canal. A typical pipeline easement ranges from 10 to 100 m (30 to 300 ft) in width depending upon line size and installation methodology. Direct habitat alterations, therefore, range from 1 to 10 ha per km (3.6 to 36 acres per mi) of easement. Dredging and spoil deposition directly remove all types of marsh vegetation within portions of the easement. Which plant assemblages are affected depends upon the characteristics of and location within the specific marsh.

Food and cover resources for consumer groups are removed directly with loss of food-bearing and cover-producing plants. Heavy marsh buggies or draglines crush and trample other vegetation within the easement corridor so that it is of little benefit to dependent consumer groups. Fresh-meadow plants, emergents, and shallow-water submergents would be most directly affected. In some cases where the existing flora consists primarily of noxious pest species, vegetation alterations may be considered beneficial for several reasons: (1) the reproductive potential of the pest species is reduced; (2) dense, unbroken stands may be opened up, thereby attracting desirable wildlife species, and (3) favored plant species may be encouraged to invade the disturbed sites. In this instance, an extensive variety of consumer species may be attracted by the new diversity and abundance of producer species and associated habitat conditions.

If pipeline ditches are backfilled to near original site conditions after pipe placement, recovery by the dominant floating, submergent, emergent, or wet-meadow plant complex can immediately begin. If the channel is not backfilled, however, open water bordered by elevated spoil levees that are vegetated by new plant assemblages is substituted for highly productive fresh marsh. New aquatic consumer groups, such as aquatic invertebrates, fish, alligator, and some wading birds may respond to newly created open-water habitats. However, the areal increase of these open-water areas is usually less than the areal decrease resulting from construction activities.

Marsh buggies, draglines, and other equipment associated with canal excavation depress the marsh surface, forming numerous ruts and other depressions. Such depressions may alter existing water flows by channeling surface waters in new directions. Such alterations could affect large areas if critical drainages are affected; usually, however, affects are quite localized in the fresh marsh. Small open-water bodies or elevated mounds may be created, but such changes normally are of minor consequence at the ecosystem level. Heavy traffic concentrated along one route, however, may produce ruts capable of channeling surface waters such that freshwater runoff into and/or out of the marsh is altered. Intramarsh circulation could be affected as separate water bodies are

connected. Localized changes of several important hydrologic characteristics, such as depth of the standing water, duration of submergence, frequency of submergence/emergence may ultimately lead to localized changes in plant assemblages.

Of greater significance, however, are the hydrologic effects of dredging pipeline channels and placing spoil. Canals that are adequately backfilled and/or plugged may have localized effects on circulation patterns, but they do not result in long continuous channels and spoil ridges. Water movement patterns remain essentially unchanged following restoration procedures.

Open, unplugged channels bordered by continuous spoil levees generate a complex of interactions which may change the amount of standing water and other important hydroperiod regulators. Factors such as deployment patterns, canal depth, and levee height can interact to produce intramarsh situations in which waters are either drained, impounded, or diverted. Long continuous canals intercept freshwater sheetflow from upland areas, thus facilitiating more rapid marsh drainage. Associated spoil levees block or redirect sheetflow, preventing its entry into portions of the marsh. Levees may also isolate interior zones. Resultant changes in average water depth, length of submergence, and frequency of fluctuation may ultimately generate changes in the area's biota, if the alterations are extensive. Small upland fresh marshes traversed by open pipeline ditches may be converted to drier systems by this increased drainage. The magnitude of alterations described above vary according to channel dimensions, number of channels, channel orientation relative to freshwater and saltwater sources, levee orientation and placement, the hydrologic gradient of the watershed, and other site-specific characteristics.

Channel excavation increases total suspended sediments. Secondary effects in emergent vegetation areas are typically temporary and localized in areal extent. In open-water sites, increased suspended sediments temporarily increase water turbidity and sedimentation rates, as well as local biological oxygen demands. Sediment dispersion, however, may affect more extensive areas, depending upon prevailing water velocities and circulation patterns. Increased water turbidity can briefly inhibit submergent and phytoplanktonic productivity. Increased biological oxygen demand may temporarily deplete dissolved oxygen levels, thus stressing nearby fish and aquatic invertebrate populations. Barren spoil banks or levees contribute to prolonged increases in the amount of suspended sediments via erosion and runoff. Establishment of plant ground cover moderates such erosion.

Disturbances associated with pipeline channel construction, line installation, and cleanup procedures typically cause short-term displacement of sensitive wildlife species from otherwise favorable habitats nearby. Displacement may affect feeding waterfowl concentrations, bird rookeries, and vertebrate movement patterns. Following project completion, species

reenter nearby sites if the areas remain essentially unaltered. Human activity and associated noises extend project effects beyond the boundaries of the immediate site.

4. Key attribute alterations

Alterations associated with line installation are functions of line size, site location, and placement methodology. Surface flowlines and supply lines and permanent overhead lines within road and access canal easements typically generate short-term impacts of limited areal extent. Impacts are quickly reclaimed by the system and generate little, if any, noticeable subsequent effects on consumer components. Gas and oil transportation pipelines, on the other hand, can modify important ecosystem attributes. Key alterations involve: (1) changes in land elevations, either through canal dredging and/or spoil deposition, both of which may lead to fundamental alterations of the existing marsh hydrologic regime, and (2) direct removal of productive fresh marsh vegetation and dependent consumer groups as a result of dredging and spoiling activities. Resulting productivity losses may be either temporary or long term, depending upon the installation technique used and the extent of site restoration. Major alterations of intramarsh circulation patterns and standing water characteristics resulting from open, unplugged pipeline ditches and associated spoil levees are capable of generating changes in plant distribution and composition. Desirable wildlife species may be either favored or discouraged by such readjustments.

Placement and operation of production facilities.

1. Activity sequence

Production aspects occur both at the wellsite and at a central treatment complex. Normally at a wellsite only slight structural modifications of the existing pad or drilling barge site are necessary to convert the well to production status. Placement of gathering flowlines from the well to the treatment facilities requires activities as described for the installation and maintenance of lines; these include line survey, limited vegetation clearing, line installation, and necessary site restoration. If exploratory drilling was conducted from a floating barge, the barge is removed and replaced by a small elevated platform supporting the wellhead. Small-scale digging and pile driving are required.

Centralized treatment facilities are typically located on firm, upland sites if they are available nearby. Otherwise, the complex is constructed in the marsh using the same construction techniques and processes employed in preparing a wellsite. Treatment and processing equipment may be supported on (1) a leveed pad, (2) a platform complex elevated on pilings and supplemented by stationary barges, or (3) a combination of the above. Brine-disposal lines are installed to transport brine to

disposal wells or marine sites. Routine operation, maintenance, and repair of treatment, pumping, and storage equipment are frequently conducted within the confines of the pad site or on the platform/barge structures. Processing wastes are stored within the complex area, disposed of via flowlines, or transported immediately off site. Routine maintenance and operational trips are conducted by trucks to sites accessible via leveed roads or by small boats to sites accessible only by canal. Typical areal extent of a newly constructed production facility is approximately 0.4 ha (1 acre).

2. Primary ecological alterations

2.1 Trampling and crushing of vegetation due to construction machinery

2.2 Complete loss of vegetation within the pad site or platform complex

2.3 Permanent displacement and/or loss of consumer groups within the facility site

2.4 Increases in concentrations of suspended sediments and dissolved nutrients

2.5 Introduction of toxic materials into the site's water and soil systems

2.6 Displacement of sensitive wildlife species from adjacent areas due to treatment processes and constant human activity

2.7 Alteration of water flows in localized areas

3. Attribute alterations

Conversion of a well to production status creates few additional site alterations. In the case of a leveed pad, all activities occur near the wellhead and central pad area. Operation consists primarily of periodic maintenance and inspection visits. Equipment repair may occasionally require limited activity on the pad. Outlying portions of the pad revegetate following reduced activity levels. If drilling was conducted from a special barge, the capped wellhead is enclosed by a small elevated platform, and the barge is subsequently removed. Construction of the platform and barge removal cause localized increases in suspended sediments. The effects however, are very temporary and restricted in scope. Consequently, further consideration will not address the very small-scale alterations generated at the existing wellhead location, but will concentrate primarily

on the ecological alterations associated with the construction and operation of a new central treatment complex in unmodified marsh.

Attribute alterations are similiar in scope but smaller in scale than for wellsite preparation. Site preparation for the treatment complex removes all biotic components within the construction boundaries through dredging, spoiling, digging, filling, and pile-driving activities. A direct loss of approximately 0.4 ha (1 acre) of sustaining habitat results for primary and secondary consumers.

Food and cover losses are particularly significant for small mammals, local insect populations, and some aquatic invertebrates as proportionally larger portions of their resource base are removed or altered. The carrying capacity of the marsh for supporting secondary consumers such as the predatory mammals and birds, waterfowl, wading and shorebirds, alligator, and aquatic vertebrates is certainly reduced by such habitat alterations. The significance of such an incremental loss at the ecosystem level of consideration is unknown, however. Evaluation must be made in context with other surrounding or associated alterations.

Reworking the marsh substrate to build ring levees and spoil pads, as well as for placing pilings and other support structures, causes increased levels of suspended sediments, dissolved nutrients, water turbidity, and biological oxygen demand at the construction site. Subsequent weathering and erosion of barren spoil deposits and routine maintenance traffic through the access canals sustain these alterations for longer periods, but at reduced levels. Construction-associated increases are typically short term and are usually confined to the site area, especially if the surrounding marsh is densely vegetated and has few or no open-water bodies. Open-water bodies or channels may permit extension of these effects over wider marsh areas, depending on local currents and flow velocities, but the affected areas remain relatively small.

Although care is exercised at the production complex to avoid release of toxic substances into the marsh, small-scale discharges of oil, gas, gasoline, assorted treatment chemicals, and brine inevitably occur in spite of the preventive and maintenance procedures instituted. Ecological alterations associated with large spills, discharges, and associated cleanup procedures are treated as a separate section. Toxicity of petrochemical hydrocarbons is a function of the quantity released, distillate fraction(s) discharged, and susceptibility of the biota to those fractions. The constant low-level release of toxic petrochemicals over long periods and their subsequent effects upon fresh marsh dynamics are not well understood and have not been satisfactorily evaluated. Effects of occasional low-level discharges are rarely felt beyond the immediate site, as certain microbial elements of the marsh muds can readily absorb and decompose small quantities.

Brine may be introduced into the marsh unintentionally as a result of leakage from flowlines or storage facilities. Although plants and animals of the salt marsh can withstand salinities of up to 40 ppt, freshwater species are intolerant of saline conditions. Introduction of brine of high or even moderate salt concentration (and unnatural ion distribution) stresses fresh marsh species to a point where survival is not possible. Larval and juvenile stages of aquatic vertebrates, and most aquatic invertebrate forms, are particularly affected by saline water influxes; death or stunted growth may occur. Much of the impact of brine effluent depends upon duration of discharge, quantity released, brine concentration, brine temperature, and dilution factors. Though some species may be able to tolerate moderate salinities, tolerance does not last long under such stressed conditions. The salinity tolerances of most species decreases with increased brine temperatures. In situations where chronic discharge is prevalent, fresh marsh species may be replaced by more tolerant brackish marsh flora. Such changes, however, would likely occur only in localized areas.

Routine maintenance operations require regular visits to the complex. If access is accomplished over leveed roads, temporary increases of dust and sediment can result. If equipment monitoring, maintenance, and repair require the use of boats, water turbidity increases within the access canal banks. The extent of this increase depends upon the frequency of boat passage, boat size and speed, and canal dimensions. Continued high turbidity levels may inhibit phytoplankton and submergent plant productivity levels within canals.

Ordinarily the effect of facility placement on waterflow patterns is minor compared to the existing hydrologic alterations caused during site-access phases. The small processing complex is but a minor component of a much larger alteration-generating process. The pad itself may cause restricted changes in water depth, water inflow, and turnover, which subsequently cause localized changes in plant composition, but such events are of minor consequences at the ecosystem level of consideration.

Disturbances associated with road or canal construction, drilling and operational activities, vehicular traffic, human presence, and noise initially cause short-term wildlife displacement. Displacement may become permanent if the wellsite or unmodified marsh is prepared for long-term production (sometimes several decades in duration). Nearby nesting, foraging, and escape cover may be degraded by the proximity of continuous human activity and operational procedures. Sensitive wildlife species may avoid otherwise favorable habitats because of human intrusion into formerly undisturbed environments. Notable examples are abandonment of nesting rookeries by wading and shorebirds and reduced use of favored feeding areas by waterfowl. The magnitude of such displacement is difficult to quantify, especially since species have differing sensitivities to disturbance. However, it should be recognized as an important consideration which extends project impacts beyond the boundaries of the immediate site for a long period of time.

4. Key attribute alterations

The key attribute alterations associated with production phase activities involve the direct long-term removal of productive plant assemblages and those directly dependent consumer groups residing within the production/treatment complex site. Consumer response is a function of the areal extent of the change, the size of the consumer's resource base, and its sensitivity to altered habitat conditions. Sensitive wildlife species may abandon otherwise favorable habitats because of continuous operational and vehicle-associated disturbances.

The chronic effects of persistent toxic materials, particularly brine, may be more important than localized acute effects on local biotic assemblages.

Spills and cleanup.

1. Activity sequence

Accidential discharge of crude oil, gas, field brine, or other substances occurs as a result of equipment failure, improper equipment operation, or human error. Built-in safety mechanisms, if present, are activated automatically to limit the quantity of discharge. Field personnel, once aware of the spill or leak, immediately initiate procedures to confine discharges to the smallest possible area. If the discharged materials enter open-water bodies or intramarsh channels, then floating oil booms or surface dams are dispersed to contain the spill. Marsh buggies, air boats, and motor boats may be used for deployment trips and personnel transport. Skimmer or vacuum units mounted on trucks or barges may be used to collect floating oil and other buoyant petrochemicals. Straw or hay is used to adsorb smaller, less accessible quantities that vacuum trucks cannot remove. Specially manufactured absorbant sheets may be dispersed and then later collected by hand. Standing vegetation coated with oil may be flushed with water pumped through high-pressure hoses and hand cut and removed from the site or burned in place to remove contaminants. Oil-contaminated muds may be excavated with hand shovels or heavy machinery, depending upon site characteristics and spill size. Special dispersion techniques may be necessary to discourage use of contaminated areas by wildlife, primarily waterfowl and wading birds. Removal of contaminants signals completion of the cleanup phase and the beginning of site restoration procedures.

2. Primary ecological alterations

Alterations will vary according to the spill size, toxicity of the chemical substances released, and cleanup methodology utilized.

2.1 Introduction of toxic materials into water and soil systems

2.2 Complete above-ground removal of vegetation in spill zone

2.3 Partial vegetation removal in adjacent areas during access and cleanup phases

2.4 Complete removal of selected consumer species in spill area

2.5 Increased concentration of suspended sediments and dissolved nutrients

2.6 Alteration of water flows in localized areas

2.7 Displacement of sensitive wildlife species from adjacent areas due to cleanup activities

3. Attribute alterations

Plant assemblages are removed or altered by either (1) the toxicological effects of spilled petrochemicals or brine or (2) the cleanup processes which follow.

Toxicity of oil pollutants varies with the petroleum fractions involved. In a decreasing order of toxicity are gasoline, diesel, bunker C, and crude. The most toxic oil products have the largest percentage of volatiles, therefore, they become less toxic very rapidly as the volatiles evaporate. Ironically, the detergents used to disperse oil spills are often more toxic that the spill materials.

Natural decomposition of an oil spill begins immediately and proceeds via several means. Depending on the temperature and wind velocity, the volatile fraction evaporates rapidly. Within 12 hr of a crude oil spill, roughly 40 percent is evaporated or in the water column, while 60 percent remains as a tarry slick. The oil can be consumed by browsing invertebrates. Oil coats suspended particulate matter and sinks to the bottom, thus becoming an energy source for bacteria that are capable of oxidizing the oil. Thin layers or crude oil can be completely decomposed within two or three months.

The effect of an oil spill on the marsh depends on the size of the spill, the duration of the release, and the type of oil spilled. Prediction of a spill's severity is difficult because of many compounding factors. Fate

of a spill depends on prevailing winds, water currents, and temperature. Toxicity to the biota depends on the temperature salinity, and the life form and life stage exposed. Spill coverage of the marsh is a function of the ambient currents, wind direction, and wind velocity.

A crude oil spill causes a die-back of marsh vegetation above the oil line within two or three days. Emergent grasses, sedges, and rushes are most likely to be affected. Cleanup efforts effect similar results with either burning or hand-cutting methods of removing contaminated stems. Plant species left with intact root systems and large food reserves recover within one year; less tolerant species require more time. If large quantities of materials are not rapidly dispersed over wide areas, mobile consumers capable of avoiding contaminated sustances leave the area. Less mobile consumers may be coated with oil or other noxious fractions and die; food and shelter resources become so degraded as to provide only minor benefits to consumer groups which previously used the site. Birds, particularly waterfowl and wading species, contaminated their plumage by landing or wading in spilled oil. Bird mortality results from exposure (due to a loss of insulation properties of the plumage) or ingestion of toxic petrochemical compoungs (swallowed while the birds attempt to clean oil from soiled feathers). Furbearers and other small mammals within the impacted area may experience similar difficulties.

Movement of men, marsh buggies, airboats, barges, outboards, and other cleanup equipment over and through aquatic marsh areas disturbs soft sediments, thereby increasing suspended sediments and dissolved nutrient concentrations. Similar movements on firmer substrates cause partial vegetation damage and rearrangement of surface configurations. Such alterations occur within, as well as around, the actual spill area. Such changes are considered to be temporary and restricted in nature; they are of little consequence at the ecosystem level of consideration.

Cleanup techniques involve all or some of the following procedures: (1) placement of floating booms or containment skirts; (2) dispersal and collection of absorbent/adsorbent materials; (3) burning; (4) excavation and removal of contaminated plants and soils; and (5) application of chemical dispersants or emulsifiers. Boom deployment by boat causes few, if any, environmental alterations. Deployment and subsequent collection of absorbent/adsorbent materials such as hay, straw, or specially manufactured plastic sheets is usually accomplished with manual labor. Site alterations are restricted to vegetation trampling and small surface disturbances. Cleanup of amounts of residual oil too small to efficiently remove with conventional collection techniques is accomplished by burning the contaminated site. Producers, and consumers which do not abandon the site are removed. Fire accelerates biomass decomposition, thereby increasing the availability of soil nutrients. Removal of standing plant materials and sediments soaked with oils lowers the local land elevation and could produce some new areas of standing water. The storage of unavailable nutrients is decreased slightly, but probably not enough to affect the ecosystem. Toxic components of the spilled material are prevented from affecting existing or future biotic elements when

saturated substrates are excavated. It is generally agreed among investigators that chemical oil spill emulsifiers, dispersants, removers, etc. are very toxic to aquatic life. Not only are the chemical agents toxic to aquatic invertebrates and vertebrates, but synergistic reactions occur which make a crude-oil/oil-spill-remover mixture much more toxic than either component separately.

Although cleanup activities may trample and crush extensive amounts of uncontaminated vegetation, the most significant alterations of the cleanup sequence are concerned with changes of the waterflow regime. Movement of marsh buggies and earthwork equipment associated with constructing emergency containment levees or drainage channels changes local land topographic features. Intramarsh circulation patterns may be altered as a result of drainage blockage (establishment of levees) or drainage enhancement (canal digging). Basic characteristics of the marsh's hydrologic regime are altered - average water depth, duration of site submergence, and frequency of site inundation. The nature of such changes are site specific and the area covered is a function of the spill size. Changes in plant composition may result if the hydrologic regime is altered such that wide areas or critical waterways are permanently affected. A site may be drained or, alternatively, impounded.

Disturbance factors should be recognized as an important consideration because they extend the project impacts beyond the boundaries of the immediate site.

4. Key attribute alterations

The primary alteration is the complete or partial removal of biotic components resulting from the effects of spilled oil and from several aspects of the cleanup procedure. Consumer response varies by species, size of the area affected, site characteristics, and resultant floristic changes. An oil spill has the potential to kill thousands of waterfowl; contaminate shellfish; kill fish, crab, and bivalve larvae; foul bottom sediments; and kill emergent grasses. Cleanup methods determine which site alterations occur and whether subsequent biotic changes are temporary or long term. For example, spills and cleanup procedures restricted to aquatic areas would have only minimal effects on higher vegetated marsh sites. Marsh buggies and other surface vehicles would not be required; operational aspects could be accomplished by outboard and/or airboats. Potential alterations of importance to the ecosystem pertain to changes in land elevations as a result of emergency earthworks constructed to contain or divert an extensive spill. Subsequent alterations in water circulation patterns can result.

Site shutdown and restoration.

1. Activity sequence

Completion of exploratory drilling, removal of production facilities, backfilling of pipeline ditches, and spill cleanup usually signal initiation of the shutdown and restoration phase. Permanent structures, equipment, concrete foundations, pipes, surface flowlines and supply lines, well casings, drilling mud, and other artifacts of oil production are removed if they possess salvage or reuse value. Otherwise, only as much attention is paid to restoration procedures as is required by Federal and State regulations, lease stipulations, and general company policy. Typically, restoration includes removal and/or burial of toxic substances, refilling of all pits, knocking down or breaking earthen levees, leveling the site, and plugging or filling ditches.

It is unusual for petroleum companies to fill access canals. The canals are used for a long period of time, as long as the wells are productive or as long as the field is active. During this period, the canal banks erode and spoil piles compact and subside. Thus there is not enough fill material from the old excavation to refill the canal. In most instances fill material would have to be barged to the site, which is often economically unfeasible. Therefore many canals are simply abandoned, though in areas where significant canal water movement posed problems, canal plugs have sometimes been constructed.

Natural processes are typically relied upon to reestablish vegetative ground cover. Even though boards may be removed from well pads and leveed roads, the road/pad foundation is usually left intact. If major earthwork is required, heavy construction machinery, barges, and/or marsh buggies are employed in a manner similar to that described for site access and site preparation.

2. Primary ecological alterations

2.1 Temporary loss of producer biomass along flowlines, vegetated levees, and pad sites

2.2 Loss of consumer biomass in access canals and pipeline canals due to refilling procedures

2.3 Increase in producer biomass on formerly barren sites due to revegetation

2.4 Increase in suspended sediments and dissolved nutrient concentrations

2.5 Alteration of modified circulation patterns as a consequence of reestablishing former marsh flow regimes

3. Attribute alterations

Procedures which reestablish the surface contours existing prior to those topographic alterations generated by canal dredging, levee and pad construction, and pipelining activities, are most effective in restoring basic site, as well as ecosystem, integrity. Flow patterns interrupted by levees and diversion canals may be reestablished. Backfilling, canal plugging, levee removal, and levee breaching procedures remove or alter such obstructions to facilitate restoration of the original flow patterns. Inherent properties of water covering the fresh marsh, such as average water depth, frequency of inundation and exposure, and duration of submergence, effectively determine the nature of the dominant vegetation by regulating the soil air regime and standing water depth. If standing water depth is irregular and shallow, shallow-water emergents and wet-meadow components dominate. Relatively deep permanent water encourages dominance of floating and submergent components. Marsh fauna is determined by the dominant vegetation types. Several waterfowl species and furbearers are attracted to particular sedges, rushes, and other emergents as food plants and for cover requirements. Floating and submergent species provide food for several waterfowl species and also support a wide array of aquatic vertebrates. Rectification of alterations caused by diking, ditching, and channelization helps restore initial water circulation and intramarsh mixing patterns.

Reworking levees, filling in canals and pits, and removing surface flowlines destroys small quantities of producer biomass that have become established on such sites during the operational life of the facility. Favorable cover types attractive to selected wildlife species, such as that found on levees, may be lost during restoration procedures. Canal levees, once vegetated with woody growth (primarily Baccharis spp. and Iva spp.) are used by many species of mammals, birds, and reptiles. Suspended sediments associated with such earthwork, combined with subsequent runoff from exposed substrates in the activity area, increase water turbidity levels. Depending on site location and project magnitude, and effects may be restricted to the immediate site or extended over larger areas. Plugging and/or filling ditches, canals, and other openwater cuts removes existing or potential aquatic environs for such consumer groups as the aquatic invertebrates, fish, alligator, waterflowl, and some wading birds species. Knocking down mound substrates and reestablishing former survace contours, however, may reform surface depressions and low sites for the same consumer groups.

Artificial revegetation introduces producer biomass on denuded areas, thereby speeding the return to initial site conditions. Native plant species provide food and cover resources most compatible with requirements of nearby consumers. Vegetative cover regulates surface-water runoff from higher marsh sites such as leveed roads, pads, and other artificially elevated sites. It also moderates the scouring effects of currents and boat-generated waves on barren substrates. A potential source of water turbidity and sedimentation is controlled. Revegation helps return unproductive marsh areas to some level of former productivity through reestablishment of the detrital-nutrient pathway, which enhances the substrate for subsequent plant development. Fresh marsh flora includes a wide variety of plants suitable for revegetation purposes. Numerous species beneficial to wildlife can be established using seeds, whole transplants, or root stocks.

Removal of petrochemical and other waste products from storage pit areas, from impregnated substrates around production facilities, and from spill areas prevents potential long-term input and bioaccumulation of heavy metals, petrochemical hydrocarbons, brine, and other noxious substances in the marsh. Removal of soil toxins speeds natural recovery processes.

Land management objectives regulate which specific consumer groups or plant assemblages are encouraged by planting techniques, filling and removal processes, and other restoration procedures. They also determine, to a large extent, how extensive efforts will be or in what direction restoration will proceed.

Displacement factors should be considered for all phases of activities. Restoration typically occurs on sites which have already been disturbed. Displacement, if it were to occur, has already been effected by prior processes. Additional effects are probably minor and temporary in nature. Site shutdown and restoration should, if successful, encourage the return of sensitive wildlife species.

4. Key attribute alterations

Restoration of the hydrologic regime is the pivotal aspect of site rehabilitation, which controls or combines with other less critical regulatory parameters and ultimately determines the health and subsequent productivity of the fresh marsh environment. The hydroperiod determines how much water covers the marsh, how long the marsh is submerged, how frequently the substrate is exposed above the water table, and what the salinity range may be. Standing water also provides cover for numerous aquatic and semiaquatic consumer species and provides a mechanism for transporting detritus and dissolved nutrients. Second-order effects include regulation of gaseous exchanges between substrate and plants and the regulation of nutrient availability. Reestablishing prior drainage pathways and surface contours and unblocking former sources of water inflow by filling in or plugging canals, removing or breaching continuous

elevated levees and spoil banks, and revegetating barren sites facilitates hydrologic restoration.

Delta Marsh

Seismic preexploration.

1. Activity sequence

Because a delta marsh is composed of many water bodies partitioned by sections of land - either broad expanses or narrow - completion of an entire series of seismic lines frequently involves a combination of techniques. On land surfaces, surveyors enter by marsh buggy or foot, stake the lines, and mark the areas where shot holes and geophones will be placed. Vegetation may be cleared along a path 3 to 4 m (10 to 15 ft) wide. A drilling rig and one or two support vehicles enter next; holes are drilled, charges and recording equipment are placed, and shots are fired. Geophones are retrieved and placed for the next series of shots. After completion of the terrestrial portion of the shot line, the holes are plugged and the crew exits.

In areas accessible only by vessel, nonexplosive methods are commonly used - sparkers, air guns, or vibrators that emit high-frequency pulses. Navigation equipment near the water's edge guides the vessel on straight-line courses back and forth across the water body until sufficient data have been collected. The vessel and support crew then leave the area.

2. Primary ecological alterations

2.1 Removal, trampling, and crushing of vegetation

2.2 Localized change in direction of water flow

2.3 Creation of pathway for increased rate of flow of runoff

2.4 Creation of pathway for increased inundation (salt water or fresh water)

3. Attribute alterations

The movement of work crews and marsh vehicles tramples and crushes vegetation in a zone wider than that cleared for shot placement. Vegetation may be completely uprooted and destroyed in some cases; the extent and degree of destruction are dependent on the hydrological conditions of the area. Because meadow and emergent vegetation types are located on higher elevations, they are more susceptible to such destruction; submergent and floating vegetation types are less likely to be completely removed from production by vehicles. Additional vegetation destruction occurs during placement of navigation equipment and temporary docking facilities. Any loss results in an immediate decrease in food and cover for the consumers in the area. In cases where the existing vegetation is a pest species, destruction may be considered beneficial for several reasons: (1) it reduces the reproductive potential of the pest species, (2) it opens dense stands of vegetation and increases the "edge effect," and (3) it might allow the zone to be invaded by a more desirable species. The total area affected is usually small in comparison to the remaining area of undisturbed marsh, and the effects on transpiration, evaporation, sediment trapping, available nutrients, and peat accumulation are insignificant.

The depth and number of ruts created by marsh vehicles are dependent upon the total number of trips and the degree to which vehicles retrace existing tracks. In areas that are submerged continuously (or nearly so), the depressions are less likely to significantly alter water-movement patterns. In such regions, confinement of marsh vehicle traffic to a narrow corridor may be wise. However, in areas of higher elevation, deep ruts resulting from retraced trails will form depressions for the movement of water. The orientation and depth of the depressions determine whether they (1) remain for long periods of time and (2) alter the water regime of a given area of land by increasing or decreasing the average depth of of water. Areas dominated by maiden cane or other shallow-water species may be replaced by stands of rushes, sedges, canes, or other deepwater emergent species when the average depth increases. The converse may occur when the average depth decreases. Although the total area affected is site specific, it is usually small when compared to the total area of undisturbed marsh. Because both of these vegetation types support the same consumers, no significant faunal changes would be expected.

The depressions allow a faster runoff of surface and standing water in small, localized areas. The long-term effects on suspended sediments and nutrients are insignificant in this turbid and nutrient-rich system. If vehicle tracks occur in areas of the marsh where isolated ponds exist, intramarsh circulation could be affected. Depressions could connect individual water bodies and increase the intermixing of their contents. Waterfowl and wading bird use would be expected to increase in these new depressions with standing water. At the ecosystem level, however, this increase is insignificant.

The degree and significance of wildlife displacement resulting from all preexploration activities are impossible to predict or quantify. The point where noise and human presence may change temporary and partial displacement to permanent and complete displacement is unknown, but this factor should be considered during all phases of activities since it extends the effects of the project beyond the boundaries.

4. Key attribute alterations

The alteration which leads to the most significant impacts on the ecosystem is the creation of depressions in the land surface. Although long-term effects on vegetation types may result from changes in waterflow regimes, the areal extent and impact on consumers are minimal. As discussed above, direct vegetation removal may be beneficial in some instances.

Gravity preexploration.

1. Activity sequence

Gravity surveys may involve the placement of a relatively small piece of equipment on the marsh surface. This unit (the gravity meter) may be carried to stations by marsh buggy, vessel, or foot. Survey crews are not required since data need not come from predetermined locations. It is necessary only to plot the locations of the data-collection stations on a map. A small amount of vegetation is trampled during the placement of the gravity meter. Several minutes are required for data collection; the unit is then packed and carried to the next station. The number of stations required for a gravity-meter survey is less than the number of shot holes necessary for a seismic survey. Two men with adequate transportation can efficiently conduct a gravity-meter survey.

2. Primary ecological alterations

2.1 Creation of ruts or depressions in the land surface

2.2 Trampling and crushing of vegetation at the station locations

2.3 Localized change in direction of water flow

2.4 Possible creation of pathway for increased rate of flow of runoff

3. Attribute alterations

Any movement of vehicles and workers over the marsh surface crushes vegetation. The vegetation may be completely uprooted and destroyed in some areas, depending upon the soil moisture conditions and the type of transportation that is utilized. The vegetation loss results in an immediate decrease in food and cover for the consumers in the area. The total area affected is usually very small in comparison to the remaining area of productive vegetation because (1) the gravity meter is quite portable, (2) data stations are not located along predetermined straight lines, and (3) the stations are not regularly spaced. Stations may frequently be reached by boat or on foot; a maximum of one lightweight surface vehicle is necessary for the entire operation. Furthermore, this vehicle need not travel straight-line paths across the marsh surface; it can make maximum use of existing roads or canals. Therefore, the effects on transpiration, evaporation, sediment trapping, available nutrients, and peat accumulation are negligible.

The above discussion indicates that total vehicular traffic associated with gravity surveys is less than that associated with seismic surveys. Nevertheless, any marsh-surface vehicle may potentially alter local land elevations. Ruts resulting from their use may form depressions for the movement of water. The orientation and depth of the depressions determine whether they (1) remain for long periods of time and (2) alter the water regime of a given area of land by increasing or decreasing the average depth of water (storage 6). Areas dominated by maiden cane or other shallow-water species may be replaced by stands of rushes, sedges, canes, or other deepwater emergent species when the average depth increases. The converse may occur when the average depth decreases. Although the total area affected is site specific, it is usually small when compared to the total area of undisturbed marsh. Because both of these vegetation types support the same consumers, no significant faunal changes would be expected.

The depressions allow a faster runoff of surface and standing water in small, localized areas. The long-term effects on suspended sediments and nutrients are insignificant in this turbid and nutrient-rich system. If vehicle tracks occur in areas of the marsh where isolated ponds exist, intramarsh circulation could be affected. Depressions could connect individual water bodies and increase the intermixing of their contents. Waterfowl and wading bird use would be expected to increase in these new depressions with standing water. At the ecosystem level, however, this increase is insignificant.

The degree and significance of wildlife displacement resulting from gravity-meter surveys are slight. This is because of the small number of people and short period of time required to complete a survey, as well as the lack of noise.

4. Key attribute alterations

The alteration which leads to the most significant impacts on the ecosystem is the creation of depressions in the land surface. Although long-term effects on vegetation types may result from changes in water-flow regimes, the areal extent and impact on consumers are minimal.

Site access by canal and wellsite dredging.

1. Activity sequence

Surveyors enter the marsh by vessel, marsh buggy, or on foot, stake the wellsite location and access route, and leave the area. The pathway may or may not be the most direct one possible. Usually there is no need to clear vegetation, but vegetation may be trampled and crushed in adjacent zones.

Site location, equipment availability, spoil placement requirements, and economic factors may dictate which type and size of dredge is used in each phase of the operation. If the wellsite is in the distal portion of the marsh, entry may be from bayside toward the marsh. A barge-mounted bucket dredge or a hydraulic dredge is used to cut the channel to the marsh edge. Spoil is placed on both sides of the channel and is usually submergent. Maintenance dredging may eventually lead to subaerial spoil levees or "islands."

Once the dredge reaches the marsh proper, the spoil levees will be subaerial. If the marsh soils are firm enough to support the weight, a track-mounted bucket dredge may be substituted for a hydraulic or a barge-mounted dredge. Spoil is placed on both sides of the channel and completely around the wellsite in most cases. Canal depths must be about 3 m (8-10 ft); typical widths approach 23 m (70 ft); a 10-m (30-ft) berm typically exists between the canal edge and the inside foot of the continuous spoil banks on both sides of the canal.

Small vessels, crew boats, supply boats, and tugs may move to the dredging site daily. Alternatively, marsh buggies may be used for these various functions. After the wellsite location is dredged (approximately 50 to 115 m, or 150 by 350 ft), all equipment moves out of the area. Redredging may be necessary once every six months to once every five yr.

2. Primary ecological alterations

2.1 Creation of depressions in land surface by marsh vehicles

2.2 Loss of vegetation and consumers along canal route and within wellsite due to excavation and covering

2.3 Creation of a body of standing water about 3 m (8-10 ft) deep for both the length of the canal and at the wellsite (approximately 50 by 115 m, or 150 by 350 ft)

2.4 Increases in concentrations of suspended sediments and dissolved nutrients

2.5 Blockage and/or diversion of normal waterflow path

3. Attribute alterations

Surveyors and their equipment trample and crush vegetation outside the zone to be excavated, but the area involved is small. Furthermore, much of this trampled area may be covered by spoil as the dredging proceeds. A more significant vegetation loss occurs during excavation of a 23-m (70-ft) wide canal and a 0.58-ha (1.2-acre) wellsite and burial of bordering marsh by spoil. The area of the latter zone is dependent upon the type of spoil disposal technique. Along the canal route, up to 10 ha per km (40 acres per mi) may be modified by spoil placement. This direct loss results in an immediate decrease in food and cover for the consumers in the area.

This loss could be significant if it occurs during periods of high river discharge, when the total area of food and cover is reduced because of submergence. In cases where the existing vegetation is a pest species, floral destruction may be considered beneficial since (1) it reduces the reproductive potential of the pest species, (2) it opens dense stands of vegetation and increases the "edge effect," and (3) it might allow the zone to be invaded by a more desirable species. For single wellsites, the total area affected is usually small in comparison to the remaining area of undisturbed marsh, and the effects on transpiration, evaporation, sediment trapping, available nutrients, and peat accumulation are insignificant. However, as each new canal and wellsite is excavated, the carrying-capacity burden of the intact marsh is increased. Cumulative effects are unknown, and the threshold point (where one additional well will significantly affect the marsh) is obscure.

The depth and number of ruts created by marsh vehicles are dependent upon the total number of trips and the degree to which vehicles retrace existing tracks. In areas that are submerged continuously (or nearly so), the depressions are less likely to significantly alter water movement patterns. In such regions, confinement of marsh vehicle traffic to a narrow corridor may be wise. However, in areas of higher elevation, deep ruts resulting from retraced trails will form depressions for the movement of water and, if deep enough, may result in standing bodies of water during wet seasons. The orientation and depth of the depressions determine whether they (1) remain for long periods of time and (2) alter the water regime of a given area of land by increasing or decreasing the average depth of water. Areas dominated by maiden cane or other shallow-water species may be replaced by stands of rushes, sedges, canes, or other deepwater emergent species.

The depressions allow a faster runoff of surface and standing water in localized areas, but this drying effect on adjacent regions is usually small. Although the total areas affected by buggy tracks during canal excavation is site specific, it is usually small when compared to the total area of undisturbed marsh. Because both of the major vegetation types support the same consumers, no significant faunal changes would be expected unless the depressions caused drainage of large areas.

The long-term effects on suspended sediments and nutrients are insignificant in this turbid, nutrient-rich system. If vehicle tracks occur in areas of the marsh where isolated ponds exist, intramarsh circulation could be affected. Depressions could connect individual water bodies and increase the intermixing of their contents. In extreme cases, depressions may be deep enough and aligned such that they become permanent branches of the existing dendritic drainage patterns. Waterfowl and wading bird use would be expected to increase in these new depressions with standing water. At the ecosystem level, however, the increase is insignificant.

Increases in suspended sediments associated with excavation are transient and affect a relatively small area, especially if temporary plugs are placed at the mouth of the canal. Long-term effects are results of erosion of canal banks and spoil deposits; erosion of the former is proportional to the river discharge and the speed and amount of boat traffic. Erosion of spoil deposits will proceed until they become vegetated by pioneering plant groups. This ecesis usually occurs within two years. Increases in suspended sediments associated with marsh buggy traffic also have short-term and long-term components; effects of increased turbidity from all sources are usually negligible when compared to the existing suspended sediment load of the riverine discharge.

The canal creates a large route for increased inundation by adjacent fresh waters. These waters are brackish only during periods of low discharge and/or hurricanes. The pattern and height of spoil placement are the most important factors that determine whether this new standing-

water body is isolated from the contiguous marsh or whether its waters may inundate extensive marsh areas. In addition, the spoil deposits paralleling the canal and wellsite interrupt existing water flows both into and out of the marsh. This blockage may result in localized changes in runoff and standing water. In some instances diversion of seasonal, large-volume discharges away from marsh areas may accelerate natural delta subsidence by diminishing the sediment supply. The total area affected is extremely site specific, unpredictable, and may range from insignificant to highly significant when compared to the total area of the marsh.

Replacement of stands of marsh vegetation by bodies of standing water (canals and buggy tracks) results in increases of habitat for aquatic invertebrates and vertebrates. However, there is usually a decrease in primary production since the phytoplankton in deeper standing water do not compensate for the losses in marsh plant production. Such replacement of food sources (animal for vegetative) will have different effects on alligators, waterfowl, and wading and shorebirds. The areal increase of canal habitat is usually less than the areal decrease resulting from indirect effects of canal construction plus marsh vehicle traffic. Turbidity that results from chronic erosion decreases the suitability of the standing water as habitat for aquatic vertebrates and aquatic invertebrates.

Wildlife displacement resulting from noise and human presence during these construction activities is limited since dredging proceeds at a rapid rate (up to 300 m, or 900 ft, per day). While the displacement effects may extend beyond the project boundaries, they are minor compared to the effects of long-term use of the canal (often for several decades) and the amount of area altered through construction.

4. Key attribute alterations

Key attribute alterations induced by this phase of oil and gas operations involve changes in land elevations. Substitution of vegetation and habitable marsh surface for standing water habitat can be critical to terrestrial organisms in delta marsh systems that are rapidly subsiding. The need for food and cover is especially important during seasons of high river discharge.

Alteration of water flows can lead to additional (erosional) losses of marsh surface and vegetation. Strategic placement of channels and spoil could lead to net increase in land elevation. Alterations will eventually elicit long-term changes in vegetative cover, followed by appropriate changes in consumers.

Dredged wellsite operation.

1. Activity sequence

Drilling and auxiliary equipment and supplies are transported and stored on barges. A specialized barge is employed for drilling. Its ballast tanks are flooded, the barge settles to the bottom, and piles are driven to anchor it firmly in place. Drilling activities require one to three months. Test results indicate whether the well should be put into production or capped and shut down. Impacts are primarily due to noise and activity associated with traffic and drilling, and leaks or spills of chemicals, mud, or petroleum materials.

2. Primary ecological alterations

2.1 Introduction of toxic materials to water and soil systems

2.2 Extended displacement of wildlife from entire area adjacent to canal and wellsite

3. Attribute alterations

During this phase of operations (one to three months), the water and soil systems are exposed to a wide variety of pollutants from drilling mud, sump discharge, and vehicle and equipment waste (exhausts, oil, grease, gasoline). The kinds and amounts of these materials, and hence their effects, are site specific. In general, these materials are restricted to the dredged wellsite and canal and only in unusual circumstances, such as storms or blowouts, are they transmitted to surrounding unmodified marsh. In the latter case, however, they may occur in concentrations that are lethal to aquatic vertebrates and invertebrates, or they are irritating to nearly all consumers. This may result in displacement of consumers for periods of weeks to years, depending on cleanup efforts, natural degradation of materials, and vegetation alteration.

Wellsite operation involves continuous, noisy, and long-term disruption of sensitive wildlife species. This factor should be considered during this phase of oil and gas operations since it extends the effects of the project beyond the boundaries of the immediate site. If the well is productive, noise and human presence may be daily occurences at the site, though levels of activity are not as concentrated as during drilling.

4. Key attribute alterations

The key attribute alterations are disturbance factors associated with concentrated activities and potential pollutants associated with drilling. These attribute alterations are largely unpredictable, especially the effects of pollutants since the persistence and potency of spilled components are highly variable. Furthermore, the certainty of a particular sort and size of accident is unknown. Since the effects of sublethal levels of persistent pollutants are not catastrophic (as is the case in a blowout or major spill), the toxins may permeate large number of individuals and species before damage is noticed. By this time, affected organisms and waterflows will have served as agents of dispersal, so that areas much larger than the wellsite may be affected.

Installation and maintenance of lines.

1. Activity sequence

Lines associated with oil and gas activity may be separated into three categories based on similarities of characteristics: (1) temporary surface lines to supply drilling sites with water and gas; (2) permanent or temporary overhead electrical lines to supply electrical and phone service to production, treatment, and pump station facilities; and (3) permanently buried lines which transport gas and oil to distribution or refining centers. Since much of the gas and oil activities in the delta marsh are water-oriented and self-contained, facilities requiring external electrical utilities are infrequent and often impractical. Most facilities have electrical generating capabilities at the site. Overhead electrical lines are limited to only the most stable sites and subsequently this category will henceforth receive only minor consideration in this discussion. The activity levels required for each line type vary according to category and range from simple to complex.

Water, gas, and other lines bringing supplies to the wellsite are usually laid on the surface, typically paralleling existing leveed roads, spoil banks, or other elevated ridges. Flowlines carrying crude to the processing center or brine to disposal wells also follow similar routes. Lines are small and usually connected and placed by hand. Equipment supply is provided by barges or small boats that use existing canals or waterways.

Where surface lines cross unmodified marsh, a survey crew enters on foot, by boat, or by marsh buggy, depending upon the length of the lines, and clears and stakes the alignment. Equipment supply is provided by marsh buggy. Lines are usually connected and placed by hand. When crossing open-water areas (canals, bayous, ponds, etc.), supply lines and flowlines are either buried in the bottom or elevated atop support pilings. Barge-mounted draglines or jetting barges may be necessary for the

burying procedures. Placement of supports for elevated flowlines is accomplished by marsh buggy, boat, and hand operations. Site characteristics such as water current, water depth, and water-course size determine what field equipment is required.

Where overhead electrical lines are utilized, these lines typically parallel existing access corridors. Installation requires only minor equipment for placing support poles and stringing lines. A tractor or backhoe operating from a leveed road or access canal may perform these activities. Holes are dug, and poles are placed and anchored. The site is then abandoned.

Installation of petroleum transport pipelines 20 to 150 cm (8 to 60 inches) in diameter requires a more complex series of activities. Lines are buried in coastal delta marshes using either the push method or the flotation method. Both methods require a survey crew to partially clear (seldom very extensive) and stake an alignment which typically flows the shortest straight-line route between points. Access is provided by marsh buggy or boat. Pipeline installation through delta marshes requires a set of very different techniques which are determined by site characteristics. A barge-mounted hydraulic or bucket dredge may be used in deepwater sites. In shallow-water areas with firm soils, a dragline or marsh buggy dragline is utilized. Levees, ridges, and other elevated formations may be bisected by canal construction, producing new flow regimes.

If the push method is utilized, which is normally the case where the marsh substrate is firm enough to support the equipment, a dragline on mats or a buggy-mounted backhoe follows the survey crew and excavates a ditch 2 to 3 m (4 to 6 ft) deep and 3 m (8-10 ft) wide. Spoil is piled continuously along one or both sides. A specialized stationary barge, located in a dredged slip, assembles the pipe sections and pushes the line down the ditch; the pipe is supported by floats and guided by a marsh buggy. Once positioned, the line is sunk in place by removing the floats. Typically, about one m (three to four ft) of water will remain above the pipe. The ditch may be left open, but it is more frequently backfilled by the dragline. If backfilling is not performed, an open-water canal bordered by one or two continuous spoil levees remains. Backfilled routes appear as straight shallow depressions due to subsequent spoil shrinkage and subsidence. When small watercourses are crossed, earthen plugs are placed parallel to the drainages to prevent water flow down the ditch. Traversal of larger water bodies (canals, streams, larger deltaic meanders) requires the use of dredges or jetting equipment. Easement widths range from about 10 to 50 m (30 to 150 ft), depending upon the line size.

If the flotation method of pipe laying is utilized, which is often the case in the delta where the substrate is too unstable to support installation equipment, a barge-mounted bucket or hydraulic dredge excavates the ditch. A canal 12 to 15 m (40 to 50 ft) wide and 2 to 3 m (6 to 9 ft)

deep is necessary to provide access for the pipe-laying equipment. A smaller, deeper ditch is dredged within the canal for actual line placement. Spoil is placed along each side of the canal, generally 10 to 15 m (30 to 50 ft) away from the edge. Gaps in the spoil levees may or may not be provided. Levee dimensions depend upon canal width and depth (which determine the quantity of spoil) and spoil stability; a levee may be 1 to 2 m (3 to 5 ft) high and possess a base width of 17 to 28 m (50 to 85 ft). Under certain site conditions, spoil disposal may be entirely subaqueous, with every little, if any, material becoming exposed. The pipe is assembled on and laid by a floating barge which travels the length of the line. In order to prevent drainage, erosion, impounding, and navigation traffic, earthen plugs, dams, riprap, or bulkheads may be required wherever a canal intersects another waterway. Whenever open water is traversed, the same equipment is used, although only a trench will be dredged. If a hydraulic dredge is used, spoils may be pumped to nearby land, dispersed over the adjacent area, or piled up in a spoil island. Normally, flotation canals are not backfilled due to the large size. Straight open-water canals flanked by low spoil levees are the final product of the flotation method.

Inland marsh sites too small or shallow to facilitate use of barge-mounted dredges may require the use of a tracked dragline moving over wooden mats or a marsh-buggy dragline. A marsh buggy dragline consists of a dragline mounted on a marsh buggy carriage smilar to that used to carry seismic equipment. It is a motorized tracked vehicle equipped with large flotation pontoons. A ditch is cut for floating in the pipe, eliminating the necessity for dredging a full-scale canal to accommodate a pipeline-laying barge. While this type of operation produces far less spoil, marsh buggy tracks often may cause changes in the marsh topography.

Once pipelines are pressure checked and operating, they are periodically inspected for leaks; boats, marsh buggies, or aircraft may be employed. The equipment utilized and traffic frequency depends on the nature of the pipeline, its size, and the local marsh conditions.

2. Primary ecological alterations

2.1 Partial vegetation loss within line easement due to trampling and crushing effects of construction machinery

2.2 Complete loss of vegetation within a canal zone 10 to 100 m (30 to 300 ft) wide and on disjunct spoil disposal areas

2.3 Partial or complete removal of consumer groups, depending on the type of the line and placement methodology utilized

2.4 Increased concentration of suspended sediments and dissolved nutrients

2.5 Blockage or alteration of normal waterflow pathways

2.6 Alteration of surface elevation

3. Attribute alterations

Attribute alterations associated with line installation vary widely depending on the type and size of line, site location, and placement methodology. Three general categories of lines, segregated according to the similarity of ecological effects are described: (1) surface flowlines, and occasionally some supply lines, which transport well products to treatment or disposal facilities, as well as bring some water and gas to drilling or production sites; (2) permanently buried gas and oil pipelines which transport products to distribution or additional refining centers; and, on rare occasion, (3) permanent overhead electrical lines to supply electrical and phone service to production, treatment, and pump station facilities.

In many instances surface supply lines and flowlines and overhead electrical lines follow existing natural ridges or access canals where maintenance and repair are facilitated. Associated ecological alterations (trampling of vegetation, localized water turbidity, etc.) are typically small in magnitude, very localized in effect, and occur in already altered locations. Distinguishable effects attributable to line installation that exceed or significantly contribute to canal-associated effects are considered negligible. Thus, when such lines closely parallel existing marsh roads or dredged access canals, the associated alterations are considered to be of minor consequence to the ecosystem as compared to the effects produced by prior access-associated activities.

However, when surface flowlines or supply lines require overland routes through unmodified marsh, the magnitude of attribute alterations increases. Whre the marsh is fairly shallow, marsh buggies transport work crews and supplies along the line. Emergent vegetation is trampled and crushed as the surface lines are connected and laid. Depending upon soil moisture conditions and the number of vehicle traverses (typically restricted to two or three trips), the vegetation may be completely uprooted and destroyed in some localized areas. An immediate loss of wildlife food and cover resources results, but such small losses represent a relatively minor alteration for most mammalian and avian species due to the restricted areal extent of the line as compared to adjacent unmodified areas. The effects on the detrital cycle and changes in the waterflow regime as a result of surface changes produced by the vehicular traffic are considered to be of minor consequence to the ecosystem. Heavy vehicular traffic, however, may increase potential waterflow alterations such that subsequent vegetative changes are effected.

A relatively small amount of dredging may be necessary where these small lines cross existing watercourses. The concentrations of suspended nutrients and sediments are temporarily increased in localized areas near the site.

When large open-water marsh areas are encountered, it is often less expensive and easier to route surface lines around such natural features by using existing road and/or canal levees rather than to dredge a new ditch. Lines are usually laid directly on the levee shoulder or toe. Installation causes few additional alterations of any significance to such disturbed sites. Various types of simple structures may be used to elevate small flowlines across open water areas. Airboats or motor boats may be used for site access and to facilitate construction activities.

Installation of a major gas/oil pipeline generates many alterations similar to those associated with dredging access canals. A typical pipeline easement ranges from 10 to 100 m (30 to 300 ft) in width depending upon line size and installation methodology. Direct habitat alterations, therefore, range from 1 to 10 ha per km (3.6 to 36 acres per mi) of easement. Dredging and spoil deposition directly remove all types of marsh vegetation within portions of the easement. The plant assemblages affected depend upon the particular characteristics of the specific marsh.

Food and cover resources for consumer groups are removed directly with loss of food-bearing and cover-producing plants. Heavy marsh buggies or draglines crush and trample vegetation within the easement corridor to the point that, although not destroyed, it is of little benefit to dependent consumer groups. Fresh-meadow plants, emergents, and shallow-water submergents would be most directly affected. In some cases where the existing flora consists primarily of noxious pest species, vegetation alterations may be considered beneficial for several reasons: (1) the reproductive potential of the pest species is reduced; (2) dense, unbroken stands may be opened, thereby attracting desirable wildlife species; and (3) favored plant species may be encouraged to invade the disturbed sites.

An extensive variety of consumer species is attracted by the wide diversity and abundance of producer species and associated habitat conditions so typical of freshwater wetlands. Broad generalizations regarding the response of any particular consumer groups beyond the level of major alterations are of little practical value, as consumer response is a function of many complex site-specific characteristics and interactions. If pipeline ditches are backfilled to near original site conditions following completion of installation operations, recovery by the dominant floating, submergent, emergent, or wet-meadow plant complex can immediately begin. Otherwise, if the channel is not backfilled, open-water areas bordered by elevated spoil levees (vegetated by new plant assemblages) are substituted for highly productive fresh marsh. New aquatic consumer groups, i.e. aquatic invertebrates, fish, alligator, and some wading birds may respond to newly created open-water habitats. The

significance of these habitat changes is difficult to evaluate in an ecosystem as dynamic as the delta marsh system. Subsidence and sediment deposition constantly alter the existing system such that it becomes extremely difficult to predict habitat effects attributable only to pipeline installation. The areal increase of new aquatic habitat is usually less than the areal decrease in marsh resulting from construction replacement of marsh by open-water habitat.

Marsh buggies and draglines associated with canal excavation (push method) depress the marsh surface, forming numerous ruts and other depressions. Such depressions may alter existing water flows by channeling surface waters in new directions. Unless such alterations cover extensive areas, the effects are usually quite localized in the delta marsh. Small open-water bodies or elevated mounds may be created, but such changes normally are of minor consequence at the ecosystem level. Heavy traffic concentrated along one route, however, may produce ruts capable of channeling surface waters such that water flows and intramarsh circulation patterns are altered. Changed flow patterns may increase or decrease the average depth of the standing water, leading to readjustments of flora components if the alterations are extensive. Such floristic changes are probably of minor consequence in a system inherently adapted to continual changes of water depth and flow patterns.

Of greater significance to the hydrologic characteristics, however, are the dredging of pipeline channels and associated spoil deposition practices. Canals that are adequately backfilled and/or plugged may have localized effects on circulation patterns, but they do not result in long continuous channels and spoil ridges. Water movement patterns remain esentially unchanged following restoration procedures.

Open unplugged channels bordered by continuous spoil levees generate a complex of interactions which may facilitate changes in the amount of standing water. Factors such as deployment patterns, canal depth, and levee height can interact to produce intramarsh situations in which waters are either drained, impounded, or diverted. Long continuous canals intercept small creeks or standing-water areas, facilitating faster marsh drainage. Associated spoil levees block or redirect sheet-flow, preventing its entry into certain marsh sectors, as well as isolating and impounding interior zones. Resulting changes in average water depth and the regular influx of suspended sediments and dissolved nutrients may ultimately generate changes in the local biota if the alterations are extensive. Diversion of the primary water inflows alters the annual recharge of sediments and nutrients to the delta, thereby inhibiting land accretion and increasing net land subsidence. The magnitude of alterations described above varies according to channel dimensions, number of channels, channel orientation relative to freshwater and saltwater sources, levee orientation and placement, the hydrologic gradient of the watershed, and other site-specific characteristics.

Channel excavation increases total suspended sediments. Secondary effects in emergent vegetation areas are typically temporary and localized in areal extent. In open-water sites, increased suspended sediments temporarily increase water turbidity and sedimentation rates, as well as local biological oxygen demands. Sediment dispersion, however, may affect more extensive areas, depending upon prevailing water velocities and circulation patterns. Increased water turbidity can briefly inhibit productivity of submergent flora. Increased biological oxygen demand may temporarily deplete dissolved oxygen levels, thus stressing nearby fish and aquatic invertebrate populations. Barren spoil banks or levees constribute to prolonged increases in the amoung of suspended sediments resulting from surface erosion and runoff. Establishment of plant ground cover moderates such erosion. Given the tremendous sediment load of the delta waters under normal circumstances, it is doubtful that such minor increases have any consequences on the ecosystem.

Disturbances associated with channel construction, line installation, and cleanup procedures typically cause short-term displacement of sensitive wildlife species from otherwise favorable habitats nearby. Displacement may affect feeding waterfowl concentrations, bird rookeries, and vertebrate movement patterns. Following activity completion, species reenter nearby sites if the areas remain essentially unaltered. Human activity and associated noises extend project effects beyond the boundaries of the immediate site.

4. Key attribute alterations

Alterations associated with line installation are functions of line size, site location, and placement methodology. Surface flowlines and supply lines and permanent overhead lines within road and access canal easements typically generate short-term impacts of limited areal extent. These impacts are quickly reclaimed by the system and generate little, if any, noticeable subsequent effects on consumer components. Gas and oil transportation pipelines, on the other hand, can modify important ecosystem attributes. Key alterations involve: (1) changes in land elevations, either through canal dredging and/or spoil deposition, both of which may lead to fundamental alterations of the existing marsh hydrological regime and (2) direct removal of productive marsh vegetation and dependent consumer groups as a result of dredging and spoiling activities. Resulting productivity losses may be either temporary or long term, depending upon the installation technique used and the extent of site restoration. Major alterations of intramarsh circulation patterns and standing water characteristics, which result from open unplugged pipeline ditches and associated spoil levees, are capable of generating changes in plant distribution patterns and composition. Desirable wildlife species may be either favored or discouraged by such readjustments. Replacement of terrestrial and semiaquatic environments with aquatic areas can be critical to terrestrial organisms already faced with habitat losses resulting from extensive delta subsidence.

Placement and operation of production facilities.

1. Activity sequence

Production aspects occur both at the wellsite and at a central treatment complex. Normally at a wellsite only slight structural modifications of the existing drilling barge site are necessary to convert the well to production status. Placement of gathering flowlines from the well to the treatment facilitiees requires activities as described for the installation and maintenance of lines; these include line survey, limited vegetation clearing, line installation, and necessary site restoration. If drilling was conducted from a floating barge, which is typically the case, the barge is removed and replaced by a small elevated platform supporting the wellhead. Small-scale digging and pile driving are required.

Centralized treatment facilities are typically located on firm, elevated sites, if they are available nearby. Otherwise, the complex is constructed in the marsh using the same construction techniques and processes employed in preparing a wellsite. Treatment and processing equipment may be supported on (1) a leveed pad dredged from the marsh; (2) a platform complex elevated on pilings and supplemented by stationary barges; or (3) a combination of the above. Brine-disposal lines are installed to transport brine to disposal wells or discharge sites. Routine operation, maintenance, and repair of treatment, pumping, and storage equipment are frequently conducted within the confines of the pad site or on the platform/barge structures. Processing wastes are stored within the complex area, disposed of via flowlines, or transported off the site immediately. Routine maintenance and operational trips are conducted primarily by boat, barge, or float plane. Typical areal extent of a newly constructed production faility is approximately 4 ha (10 acres). Dredging and spoil placement for barge-mounted production equipment location or channel maintenance is occasionally required.

2. Primary ecological alterations

2.1 Trampling and crushing of vegetation due to construction machinery

2.2 Complete loss of vegetation within the pad site or platform complex

2.3 Permanent displacement and/or loss of consumer groups within the facility site

2.4 Increases in concentrations of suspended sediments and dissolved nutrients

2.5 Introduction of toxic materials into the site's water and soil systems

2.6 Displacement of sensitive wildlife species from adjacent areas due to treatment processes and constant human activity

2.7 Alteration of water flows in localized areas

2.8 Changes in land elevations

3. Attribute alterations

Conversion of a well to production status creates few additional site alterations. In the case where drilling was conducted from a special barge, the capped wellhead is enclosed by a small elevated platform supported by concrete pilings with a concrete and metal superstructure. The barge is subsequently removed. Platform construction and barge removal cause localized increases in suspended sediments. The effects, however, are very temporary and restricted in scope. Consequently, further considerations will not address the very small-scale alterations generated at the existing wellhead location, but will concentrate primarily on the ecological alterations uniquely associated with the construction and operation of a central treatment complex in unmodified marsh.

Some attribute alterations are similar in scope but larger in scale than those of wellsite preparation; other alterations are quite similar to site preparations conducted in brackish, salt, or fresh marshes. Typically a central production complex includes a combination of elevated structures and reworked marsh sites - areas that have been filled and stabilized. Naturally high spots are favored locations. Site preparation for the treatment complex removes all biotic components within the construction boundaries through dredging, spoiling, digging, filling, and pile-driving activities. A direct loss of approximately 2 to 4 ha (5 to 10 acres) of sustaining habitat results for primary and secondary consumers. Food and cover losses are particularly significant for small mammals, local insect populations, and some aquatic invertebrates as proportionally larger portions of their resource base are removed or altered. The carrying capacity of the marsh for supporting secondary consumers such as the predatory mammals and birds, waterfowl, wading and shorebirds, alligators, and aquatic vertebrates is certainly reduced by such habitat alterations. The significance of such an incremental loss at the ecosystem level of consideration is unknown, however. Evaluation must be made in context with other surrounding or associated alterations.

Reworking the marsh substrate to build ring levees and spoil pads, as well as placing pilings and other support structures, causes increased levels

of suspended sediments, dissolved nutrients, water turbidity, and biological oxygen demand at the construction site. Subsequent weathering and erosion of barren spoil deposits and routine maintenance traffic through the access canals sustain these alterations for longer periods, but at reduced levels. Construction-associated increases are typically short term and usually confined to the site area. Neither short-term nor long-term increases are significant when compared to the existing sediment load of the riverine discharge.

Although care is exercised at the production complex to avoid release of toxic substances into the marsh, small-scale discharges of oil, gas, gasoline, assorted treatment chemicals, and brine inevitably occur in spite of the preventive and maintenance procedures insituted. Ecological alterations associated with large spills, discharges, and associated cleanup procedures are treated as a separate section. Toxicity of petrochemical hydrocarbons is a function of the quantity released, distillate fraction(s) discharged, and susceptibility of the biota to those fractions. The constant low-level release of toxic petrochemicals over long periods and their subsequent effects upon delta marsh dynamics are poorly understood and cannot be satisfactorily evaluated. Effects of occasional, low-level discharges are probably never felt much beyond the immediate site as certain microbial elements of the marsh muds can readily absorb and decompose small quantities. Movements of large volumes of water through this marsh system can effectively flush such pollutants from the site.

Brine may be introduced into the marsh unintentionally as a result of leakage from flowlines or storage facilities. Although plants and animals of the salt marsh can withstand salinities of up to 40 ppt, freshwater species are intolerant of saline conditions. Introduction of brine of high or even moderate salt concentration (and unnatural ion distribution) stresses fresh marsh species to a point where survivial is not possible. Larval and juvenile stages of aquatic vertebrates, and most aquatic invertebrate forms, are particularly affected by saline water influx. Death or stunted growth may occur. Much of the impact of brine effluent depends upon duration of discharge, quantity released, brine concentration, brine temperature, and dilution factors. Though some species may be able to tolerate moderate salinities, tolerance does not last long under such stressed conditions. The salinity tolerances of most species is decreased with increased brine temperatures. In situations where chronic low-concentration discharge is prevalent, fresh marsh species may be replaced by more tolerant brackish marsh flora. Such changes, however, would most likely occur only in localized areas.

Routine maintenance operations require regular visits to the complex, and activities may disturb sensitive wildlife concentrations, causing behavioral changes. If equipment monitoring, maintenance, and repair requires the use of boats, water turbidity increases within the access canal due to resuspension of bottom sediments and erosion of canal banks. The extent of this increase depends upon the erosion of canal banks. The extent of this increase depends upon the frequency of boat passage, boat

size and speed, and canal dimensions. Continued high turbidity levels may inhibit phytoplankton and submergent plant productivity within canals.

Ordinarily the effect of facility placement on waterflow patterns is minor compared to the hydrologic variations resulting from annual river discharge pulses and alterations generated during site access phases. The small processing complex is but a minor component of a much larger alteration-generating process. The pad may cause restricted changes in water depths, water inflow, and turnover which subsequently cause localized changes in plant composition, but such events are of minor consequence at the ecosystem level of consideration.

Disturbances associated with drilling and operation activities, vehicular traffic, human presence, and noise initially cause short-term wildlife displacement which may become permanent displacement if the wellsite or unmodified marsh is converted for long-term production. Nearby resting, foraging, and escape cover are degraded by the proximity of continuous human activity and operational procedures. Sensitive wildlife species avoid otherwise favorable habitats because of human intrusion into formerly undisturbed environments; notable examples are abandonment of nesting rookeries by wading and shorebirds and reduced use of favored feeding areas by waterfowl. The magnitude of such displacement, though difficult to predict, should be recognized as an important consideration which extends project impacts beyond the boundaries of the immediate site.

4. Key attribute alterations

The key attribute alterations associated with production phase activities involve primarily the direct long-term removal of productive plant assemblages and those directly dependent consumer groups residing within the production/treatment complex site. Consumer response is a function of the areal extent of the change, the size of the consumer's resource base, and its sensitivity to altered habitat conditions. Sensitive wildlife species may abandon otherwise favorable habitats because of continuous operational and vehicle-associated disturbances.

Changes in land elevation generate changes of waterflow that can lead to erosion losses of marsh substrates and vegetation. Strategic placement of spoil could compensate for subsidence and lead to a net increase in land elevation and readjustments of local flow patterns. Alterations will eventually elicit long-term changes in vegetative cover, followed by appropriate changes in consumer composition.

The chronic effects of persistent toxic materials, particularly brine, may be more important than acute effects on local biotic assemblages.

Spills and cleanup.

1. Activity sequence

Accidental discharge of crude oil, gas field brine, or other substances occurs as a result of equipment failure, improper equipment operation, or human error. Build-in safety mechanisms, if present, are activated automatically to limit the quantity of discharge. Field personnel, once aware of the spill or leak, immediately initiate procedures to confine discharges to the smallest possible area. If the discharged materials enter open-water bodies or intramarsh channels, then floating oil booms or surface dams are used to contain the spill. Marsh buggies, air boats, and motor boats may be employed for deployment trips and personnel transport. Skimmer or vacuum units mounted on trucks or barges may be used to collect floating oil and other buoyant petrochemicals. Straw or hay is scattered to adsorb smaller, less accessible quantities that vacuum trucks cannot remove. Specially manufactured absorbant sheets may be dispersed and then later collected by hand. Standing vegetation coated with oil may be flushed with water pumped through high-pressure hoses and hand cut and removed from the site or burned in place to remove contaminants. Oil-contaminated muds may be excavated with hand shovels or heavy machinery depending upon site characteristics and spill size. Special dispersion techniques may be necessary to discourage use of contaminated areas by wildlife, primarily waterfowl and wading birds. Removal of contaminants signals completion of the cleanup phase and the beginning of site restoration procedures.

2. Primary ecological alterations

Alterations will vary according to the spill size, toxicity of the chemical substances released, and cleanup methodology utilized.

2.1 Introduction of toxic materials into water and soil system

2.2 Complete above-ground removal of vegetation in spill zone

2.3 Partial vegetation removal in adjacent areas during access and cleanup phases

2.4 Complete removal of selected consumer species in spill area

2.5 Increased concentration of suspended sediments and dissolved nutrients

2.6 Alteration of water flows in localized areas

2.7 Displacement of sensitive wildlife species from adjacent areas due to cleanup activities

3. Attribute alterations

Plant assemblages are removed or altered by either (1) the toxic effects of spilled petrochemicals or brine or (2) the cleanup processes which follow.

Toxicity of oil pollutants varies with the petroleum fractions involved. In a decreasing order of toxicity are gasoline, diesel, bunker C, and crude. The most toxic oil products have the largest percentage of volatiles, therefore, they become less toxic very rapidly as the volatiles evaporate. Ironically, the detergents used to disperse oil spills are often more toxic than the spilled material.

Natural decomposition of an oil spill begins immediately and proceeds via several mechanisms. The volatile fraction evaporates at a rate which depends on the temperature and wind velocity. Within 12 hr of a crude oil spill, roughly 40 percent of evaporated or in the water column while 60 percent remains as a tarry slick. The oil can be consumed by browsing invertebrates. Oil coats suspended particulate matter and sinks to the bottom, thus becoming an energy source for certain bacterial that are capable of oxidizing the oil. Thin layers of crude oil can be completely decomposed within two or three months.

The effect of an oil spill on the marsh depends on the size of the spill, the duration of exposure, and the type of oil spilled. Prediction of a spill's severity is difficult because of many compounding factors. The fate of a spill depends on prevailing winds, water currents, and temperature. Toxicity to the biota depends on the temperature, salinity, and the life form and life stage exposed. Spill coverage of the marsh is a function of the currents, wind direction, and wind velocity at that particular time.

A crude oil spill causes a die-back of marsh vegetation above the oil line within two or three days. Emergent grasses, sedges, and rushes are life forms most likely to be affected. Cleanup efforts effect similar results because of either burning or hand-cutting contaminated stems. Plant species with intact root systems and large food reserves recover within one year; less tolerant species require more time. If large quantities of toxic materials are not rapidly dispersed over wide areas, mobile consumers capable of avoiding contaminating substances leave the areas. Less mobile consumers may be coated with oil or other noxious fractions and die. Food and shelter resources become so degraded as to provided

only minor benefits to consumer groups which previously utilized the site. Birds, particularly waterfowl and wading species, contaminate their plumage by landing or wading in spilled oil. Bird mortality results from exposure (due to a loss of insulation properties of the plumage) or ingestion of toxic petrochemical compounds (swallowed while the birds attempt to clean oil from soiled feathers). Furbearers and other small mammals within the impacted area may experience smiliar difficulties.

Movement of men, marsh buggies, airboats, barges, outboards, and other cleanup equipment over and through aquatic marsh areas disturbs soft sediments, thereby increasing suspended sediments and dissolved nutrient concentrations. Similar movements on firmer substrates cause partial vegetation damage and rearrangement of surface configurations. Such alterations occur within, as well as around, the actual spill area. Such changes are temporary and restricted in nature. They are of little consequence at the ecosystem level of consideration.

Cleanup techniques involving all or some of the following procedures include: (1) placement of floating booms or containment skirts; (2) dispersal and collection of absorbent/adsorbent materials; (3) excavation and removal of contaminated plants and soils; and (4) application of chemical dispersants or emulsifiers. Boom deployment by boat causes few, if any, environmental alterations. Deployment and subsequent collection of absorbent/adsorbent materials such as hay, straw, or specially manufactured plastic sheets is usually accomplished with manual labor. Site alterations are restricted to vegetation trampling and small surface disturbances.

Cleanup of residual oil not removed with conventional collection techniques is accomplished by burning the contaminated site. Producers, and consumers which do not abandon the site, are removed. Removal of standing plant materials and sediments soaked with oils lowers the local land elevation and could produce some new areas of standing water. The storage of unavailable nutrients is decreased slightly, but probably not enough to affect the ecosystem. Toxic components of the spilled material are prevented from affecting existing or future biotic elements when saturated substrates are excavated. It is generally agreed among investigators that chemical oil spill emulsifiers, dispersant removers, etc. are very toxic to aquatic life. Not only are the chemical agents toxic to aquatic invertebrates and vertebrates, but synergistic reactions occur which make a crude-oil/oil-spill-remover mixture much more toxic than either component separately.

Although cleanup activities may trample and crush extensive amounts of uncontaminated vegetation, the most significant alterations of the cleanup sequence are concerned with changes of the waterflow regime. Movement of marsh buggies and earthwork equipment associated with constructing emergency containment levees or drainage channels changes local land topographic features. Intramarsh circulation patterns may be altered as a result of drainage blockage (establishment of levees) or drainage

enhancement (canal digging). A basic characteristic of the marsh's hydrologic regime, average water depth, is altered. Such changes are site specific and areal magnitude is a function of the spill size. Plant alterations may result if the hydrologic regime is altered such that wide areas or criticial waterways are permanently affected. A site may be drained or alternatively impounded.

Disturbances associated with vehicular and boat traffic, human presence, and cleanup procedures typically cause short-term displacement of sensitive wildlife species from otherwise favorable habitats nearby. Displacement may affect feeding waterfowl concentrations, bird rookeries, and vertebrate movement patterns. Following activity completion, species reenter nearby sites if the areas remain essentially unaltered. Human activity and associated noises extend project effects beyond the boundaries of the spill site.

4. Key attribute alterations

The primary alteration is the complete or partial removal of biotic components, due to the effects of spilled oil and the cleanup procedure. Consumer response varies by species, size of the area affected, site characteristics, and resultant floristic changes. An oil spill has the potential to kill thousands of waterfowl; contaminate shellfish; kill fish, crab, and bivalve larvae; foul bottom sediments; and kill emergent grasses. Cleanup methods determine site alterations that occur and whether subsequent biotic changes are temporary or long-term. For example, spills and cleanup procedures restricted to aquatic areas would have only minimal effects on higher vegetated marsh sites. Marsh buggies and other surface vehicles would not be required; operational aspects could be accomplished by outboard and/or airboats. Potential alterations of importance to the ecosystem pertain to changes in land elevations as result of emergency earthworks required to contain or divert an extensive spill. Subsequent alterations in water depth and circulation patterns can result.

Site shutdown and restoration.

1. Activity sequence

Completion of exploratory drilling, removal of production facilities, backfilling of pipeline ditches, and spill cleanup usually signal initiation of the shutdown and restoration phase. Permanent structures, equipment, concrete foundations, pipes, surface flowlines and supply lines, well casings, drilling mud, and other artifacts of oil production are removed if they possess salvage or reuse value. Otherwise, only as much attention is paid to restoration procedures as is required by Federal and state regulations, lease stipulations, and general company policy. In delta marshes restoration typically includes removal and/or

burial of toxic substances, refilling of all pits, knocking down or breaking earthen levees, leveling the site, and plugging or filling ditches.

It is unusual for permittees to fill access canals. Since these canals are often used for decades (as long as wells or whole fields are active), there may be a considerable amount of bank erosion, spoil compaction, and subsidence. Usually there is not enough fill material from excavation and maintenance to refill the canal. In most instances fill material would have to be barged to the site, which is often economically unfeasible. Consequently canals are often simply abandoned, though in places where significant canal water movement posed problems, canal plugs have sometimes been constructed.

Natural processes are typically relied upon to reestablish vegetative ground cover. If major earthwork is required, heavy construction machinery, barges, and/or marsh buggies are employed in a manner similar to that described for site access and site preparation.

2. Primary ecological alterations

2.1 Temporary loss of producer biomass along flowlines, vegetated levees, and pad sites

2.2 Loss of consumer biomass in access canals and pipeline canals due to refilling procedures

2.3 Increase in producer biomass on formerly barren sites due to revegetation

2.4 Increase in suspended sediments and dissolved nutrient concentrations

2.5 Alteration of midofied circulation patterns as a consequence of reestablishing former marsh flow regimes

3. Attribute alterations

Procedures which reestablish the original marsh surface contours, either through the reworking of altered substrates or by counteracting subsidence effects, are most beneficial in restoring the integrity of the site and ecosystem. Flow patterns interrupted by levees and diversion canals are reestablished. Backfilling, canal plugging, levee removal, and levee breaching procedures remove or alter such obstructions to facilitate restoration of the original flow patterns. Average water depth and suspended sediment load determine the nature of the dominant vegetation by

regulating the water turbidity and standing water depth. If standing water depth is irregular and shallow, shallow-water emergents and wet-meadow components dominate. Constant deep water encourages dominance of floating and submergent components if water turbidity is not too severe. Marsh fauna, consequently, is determined by the dominant vegetation types. Several waterfowl species and furbearers are especially attracted to particular sedges, rushes, and other select emergents for their food and for certain cover requirements. Floating and submergent species are eaten by several waterfowl species and also support a wide array of aquatic vertebrates. Rectification of alterations caused by diking, ditching, and channelization helps restore initial water circulation, intramarsh mixing patterns, and sediment deposition.

Reworking levees, filling in canals and pits, and removing surface flowlines destroys small quantities of producer biomass that may have become established on such sites during the operational life of the operational life of the facility. Favorable cover types attractive to selected wildlife species may be lost during restoration procedures. Canal levees, once vegetated with woody growth (primarily Baccharis spp. and Iva spp.), are utilized by many species of mammals, birds, and reptiles. Suspended sediments associated with such earthwork, combined with subsequent runoff from exposed substrates in the activity area, increase water-turbidity levels. Depending on site location and project magnitude, the effects may be restricted to the immediate site or distributed over larger areas. Water turbidity levels are rarely of major consequence, considering the naturally high suspended sediment load of delta waters. Plugging and/or filling ditches, canals, and other open-water cuts removes existing or potential aquatic environs for such consumer groups as the aquatic invertebrates, fish, alligator, waterfowl, and some wading bird species. Knocking down mounded substrates and reestablishing former surface contours, however, may reform surface depressions and low sites for the same consumer groups. Leveling mounded formations may, on the other hand, accelerate the deleterious effects of the area's general subsidence. Land managers may deem it more desirable to retain elevated areas rather than return to submerged conditions. Local site conditions will determine which objective is more desirable.

Artificial revegetation returns producer biomass to denuded areas, thereby speeding the return to intial site conditions. Native plant species provide food and cover resources most compatible with requirements of nearby consumers. Vegetative cover regulates surface water runoff from higher marsh sites, such as leveed roads, pads, and other artificially elevated sites, and also moderates the scouring effects of currents and boat-generated waves on barren substrates. A potential source of water turbidity and sedimentation is controlled. Revegetation helps return unproductive marsh areas to some level of former productivity through reestablishment of the detrital-nutrient pathway which enhances the substrate for subsequent plant development. Delta marsh flora includes a wide variety of freshwater plants suitable for revegetation pruposes. Numerous species beneficial to wildlife can be established using seeds, whole transplants, or root stocks.

Removal of petrochemical and other waste products from storage pit areas, from impregnated substrates around production facilities, and from spill areas prevents potential long-term input and bioaccumulation of heavy metals, petrochemical hydrocarbons, brine, and other noxious substances in the marsh food chain. Removal of soil toxins speeds natural recovery processes by improving growth conditions.

Land management objectives regulate which specific consumer groups or plant assemblages are encouraged by planting techniques, filling and removal processes, and other restoration procedures. These objectives determine, to a large extent, how extensive the efforts will be or in what direction restoration will proceed.

Restoration typically occurs on sites which previously supported various types of displacement-producing activities or on sites which have just recently been disturbed. Displacement, if it were to occur, has already been effected by such prior processes. Additional effects are probably minor and temporary in nature. Site shutdown and restoration should, if successful, encourage the return of sensitive wildlife species.

4. Key attribute alterations

Restoration of the hydrologic regime is the pivotal aspect of site rehabilitation; it controls or combines with other less critical regulatory parameters, and ultimately determines the health and productivity of the delta marsh environment. The hydroperiod determines how mcuh water covers the marsh, its depth, what the salinity regime may be, and to what extent sediment accretion occurs. Standing water provides cover for numerous aquatic and semiaquatic consumer species and provides a mechanism for transporting detritus and dissolved nutrients. Second-order effects include the regulation of sunlight available to submergent vegetation. Hydrologic restoration is accomplished by reestablishing prior drainage pathways and surface contours. This may include unblocking former sources of water inflow, filling in or plugging canals, removing or breaching continuous elevated levees and spoil banks, and revegetating barren sites.

Levees and Spoil Banks

Seismic preexploration.

1. Activity sequence

The techniques utilized for seismic preexploration activities when they take place on levees is the same as when they occur on relatively dry marsh surfaces. However, an entire shot line is rarely conducted on a levee/spoil-bank system. Typically, the shot line is

oriented at some angle to the levee alignment; consequently, only a small number of holes is dug unless the levee is quite wide. The majority of the holes are dug on systems adjacent to the levee/spoil bank. Surveyors enter the area by truck, marsh buggy, or on foot, stake the lines, and mark the areas where shot holes and geophones will be placed. Vegetation may be cleared along a path 3 to 4 m (10 to 15 ft) wide. A drilling truck or buggy and one or two support vehicles enter next; holes are drilled, charges and recording equipment are placed, and shots are fired. Geophones are retrieved, and after completion of all shots on the levee system, the holes are plugged and the crew exits.

2. Primary ecological alterations

2.1 Creation of ruts or depressions in the land surface, possibly breaching the levee

2.2 Trampling and crushing of vegetation along shot line path

2.3 Localized change in direction of water flow

2.4 Creation of pathway for increased rate of flow of runoff

3. Attribute alterations

The movement of work crews and marsh vehicles over the land surface tramples and crushes vegetation in a zone wider than that cleared for shot placement. The vegetation may be completely destroyed in some areas, depending upon the soil moisture conditions. This results in an immediate decrease in food and cover for the consumers in the area. The total area affected is usually small in comparison to the remaining area of productive vegetation, and the effects on consumers and detrituts accumulation are usually insignificant.

The depth and number of ruts created by marsh vehicles are dependent upon the total number of trips and the degree to which vehicles retrace existing tracks. Deep ruts, resulting from retraced trails which parallel the levee alignment, will form depressions for the movement of water and, if deep enough, may result in standing bodies of water during wet seasons. The orientation and depth of the depressions determine whether they (1) remain for long periods of time and (2) alter the water regime of the local area by increasing or decreasing the surface water and macropore water. In extreme cases the deep tracks cross the entire levee or spoil system; this breaching could establish water flows between the systems on either side of the levee/spoil-bank system. Assuming that this major change does

not occur, the effects of the depressions are localized in nature. The vegetation in the depressions may change to more water-tolerant grasses and sedges, such as Eleocharis spp. and Scirpus spp. Consumers that depend upon the existing vegetation for food and/or cover may ultimately increase or decrease.

The depressions allow a faster runoff of surface water in localized areas. The long-term effects on sediment loss and nutrients are slight. If vehicle tracks completely breach the levee, major changes in water flows will occur. The effects may be serious - potentially resulting in conversion of ecosystems. However, each system is unique, and predictions must be based on the types of ecosystems present on either side of the levee/spoil bank, ecosystem size, levee alignment relative to critical circulation patterns, and other site-specific information.

The degree and significance of wildlife displacement resulting from seismic preexploration activities are not long lasting since the activity is short term (two weeks or less). The activity is characterized by considerable human movement and noise so that tolerances of the most sensitive species should be considered. The effects are felt considerably beyond the project boundaries.

4. Key attribute alterations

The alteration which leads to the most significant impacts on the ecosystem is the creation of depressions in the land surface. Effects which are large in areal extent and long term may result from induced changes in waterflow regimes of adjacent systems (if levees are breached). As discussed earlier, the total area affected, and thus, the kinds and number of consumers, is site specific.

Gravity preexploration.

1. Activity sequence

Gravity surveys involve the placement of a relatively small piece of equipment on the levee surface. This unit, the gravity meter, is carried to stations by truck, marsh buggy, boat, or foot. Survey crews are not required since data need not come from predetermined locations. It is necessary only to plot the location of the data-collection stations on a map. A small amount of vegetation is trampled during the placement of the gravity meter. Several minutes are required for data collection; the unit is then packed and carried to the next station. The number of stations required for a gravitymeter survey is less than the number of shot holes necessary for a seismic survey. Two men with adequate transportation can efficiently conduct a gravity meter survey.

2. Primary ecological alterations

2.1 Possible creation of ruts or depressions in the land surface

2.2 Trampling and crushing of vegetation at the station locations

2.3 Possible localized change in direction of water flow

2.4 Possible creation of pathway for increased rate of flow of runoff

3. Attribute alterations

The movement of vehicles and workers over the land surface crushes vegetation. The vegetation may be completely destroyed in some areas, depending upon the soil moisture conditions and the type of transportation that is utilized. The vegetation loss results in an immediate decrease in food and cover for the consumers in the area. The total area affected is usually very small in comparison to the remaining area of productive vegetation because (1) the gravity meter is quite portable, (2) data stations are not located along predetermined straight lines, and (3) the stations need not be precisely and regularly spaced. Stations may frequently be reached by boat or on foot; a maximum of one lightweight surface vehicle is necessary for the entire operation. Furthermore, this vehicle need not travel straight-line paths across the land surface; it can make maximum use of existing roads or canals. Therefore, the effects on consumers and detritus accumulation are negligible.

The above discussion indicates that total vehicular traffic associated with gravity surveys is less than that associated with seismic surveys. Nevertheless, any surface vehicle may potentially alter local land elevations. Ruts resulting from their use may form depressions for the movement of water and, if deep enough, may result in standing bodies of water during wet seasons. Th orientation and depth of the depressions determine whether they (1) remain for long periods of time and (2) alter the water regime of the local area by increasing or decreasing the surface water and macropore water. In extreme cases, the deep tracks repeatedly cross the entire levee or spoil system; this breaching could establish water flows between the systems on either side of the levee/spoil-bank system. Assuming that this major change does not occur, the effects of the depressions are localized in nature. The vegetation in the depressions may change to more water-tolerant grasses and sedges. Consumers that depend upon the existing vegetation for food and/or cover may ultimately increase or decrease.

The depressions allow a faster runoff of surface water in localized areas. The longterm effects on sediment and nutrients are limited.

The degree and significance of wildlife displacement resulting from gravity-meter surveys are slight. This is because of the small number of people and short period of time required to complete a survey (less than a week), as well as the lack of noise.

4. Key attribute alterations

The potential alteration which could lead to a significant impact on the ecosystem is the creation of depressions in the land surface. Effects which are large in areal extent and long term may result from induced changes in waterflow regimes of adjacent systems (if levees are breached). These effects, of course, can occur only if trucks, buggies, or other surface vehicles are used. The total area affected (and thus, the kinds and number of consumers) is site specific.

Site access

By road. Existing natural or man-made levees or spoil banks must meet at least two criteria in order to be realistically considered as sites for roadways to wellsites: (1) they must be well aged so that the degree of compaction is sufficient to accommodate heavy equipment and (2) they msut be aligned such that they approach the wellsite location. In a restricted number of cases, these criteria may be met. If so, the levee will be "improved" in order to convert it to a usable roadway. Excavation of borrow pits, piling of spoil, creation of ruts, and additional construction activities/ impacts are not necessary. Hence, conversion generally involves the placement of boards and/or additional surfacing on top of the levee. In some cases it may be necessary to widen or reinforce narrow portions of the levee.

The conversion activities will remove a stirp of vegetation about 10 m (30 ft) wide along the top of the levee. An additional alteration involves displacement of wildlife along the route. There may be effects on adjacent ecosystems during the construction/conversion activities, but these impacts are too site specific to be predictable. Further consideration of this possibility is not warranted. For a complete discussion of typical road-building alterations, see "Site access by leveed road" in the brackish marsh and coastal uplands sections of this chapter. The latter section would be more applicable to road building on a broad terrace or chenier.

By canal. The occasions when this phase of oil and gas operations will affect levee/spoil systems fall into two categories. The first category includes cases where a natural levee, a man-made levee, or a small/narrow spoil deposit is completely breached by an access canal. In this situation the affected area on the levee system is confined to a 23-m (70-ft) wide strip, which is replaced by a canal. Unless a particular levee exists in an area having a high density of wells, disturbed locations will be infrequent and widely spaced. Since the objective is to go through the levee, the absolute amount of lost habitat is generally small. However, the relative importance

of the lost area must be based on the percentage of intact levee system remaining.

The most significant impacts of a complete breaching of a levee are often felt by the ecosystems admacent to the levee, rather than by the levee system itself. For a complete discussion of attribute alterations and techniques designed for mitigation of turbidity/erosion problems, see the section on "Installation and maintenance of lines" in this section. The second category includes those cases where the wellsite is located on the spoil deposit and the landform is not completely breached. The following description and discussion are oriented primarily toward this second category.

1. Activity sequence

Surveyors enter the area by truck, marsh buggy, or on foot, stake the wellsite location and access route, and leave the area. The pathway is generally the most direct one possible. Usually there is no need to clear vegetation, but vegetation may be trampled and crushed in adjacent zones.

Site location, equipment availability, spoil placement requirements, and economic factors may dictate which type and size of dredge is used in each phase of the operation. In a levee system, each new canal is usually an extension or branch of an existing canal. Therefore, a barge-mounted bucket dredge or a hydraulic dredge may be used. Alternatively, a track-mounted bucket dredge may be employed. Spoil is placed on both sides of the channel and completely around the wellsite in most cases. Canal depth must be about 3 m (8-10 ft); typical widths approach 23 m (70 ft); a 10-m (30-ft) berm typically exists between the canal edge and the inside foot of the continuous fresh spoil banks (on both sides of the canal).

Small vessels, crew boats, supply boats, and tugs may move to the dredging site daily. Alternatively, marsh buggies may be used for these various functions. After the wellsite location is dredged (usually 50 by 115 m, or 150 by 350 ft), all equipment moves out of the area. Redredging may be necessary once every six months to once every five yr.

2. Primary ecological alterations

2.1 Creation of depressions in land surface by marsh vehicles

2.2 Loss of vegetation along canal route due to excavation and covering

2.3 Creation of a water environment about 3 m (8-10 ft) deep

2.4 Increases in concentrations of suspended sediments and dissolved nutrients

2.5 Alteration of normal runoff pathways

3. Attribute alterations

Surveyors and their equipment trample and crush vegetation outside the zone to be excavated, but the area involved is small. Furthermore, much of this trampled area may be covered by spoil as the dredging proceeds. A more significant vegetation loss occurs during excavation of a 23-m (70-ft) wide canal and a 0.58-ha (1.2-acre) wellsite and burial of some bordering vegetation by fresh spoil. The area of the latter zone is dependent upon the type of spoil disposal technique. This direct loss results in an immediate decrease in food and cover for the consumes in the area. The total area affected is usually small in comparison to the remaining productive vegetation, and the impacts on consumers and detritus accumulation are insignificant. However, as each new canal is excavated, the carrying capacity of the intact ecosystem is decreased. Cumulative effects are unknown, and the threshold point (where one additional canal will significantly affect the system) is obscure.

The depth and number of ruts created by vehicles are dependent upon the total number of trips and the degree to which vehicles retrace existing tracks. Deep ruts resulting from retraced trails will form depressions for the movement of water and, if deep enough, may result in standing bodies of water during wet seasons. The orientation and depth of the depressions determine whether they (1) remain for long periods of time and (2) alter the water regime of a given area of land by increasing or decreasing the surface water and macropore water. In extreme cases, the deep tracks could cross the entire levee or spoil system; this breaching could establish water flows between the systems on either side of the levee/spoil-bank system. Assuming that this major change does not occur, the effects of the depressions are localized in nature. The vegetation in the depressions may change to more water-tolerant grasses and sedges, such as Eleocharis spp. and Scirpus spp.

The depressions allow a faster runoff of surface water in localized areas. However, the long-term effects on sediment loss and nutrients are slight. Increases in turbidity associated with excavation are transient and affect a relatively small area, especially if temporary plugs are placed nearby. Long-term effects are results of erosion of canal banks and fresh spoil deposits; erosion of the former is pro-

portional to the speed and amount of boat traffic. Erosion of fresh spoil deposits will proceed until they become vegetated by pioneering plant groups. The ecesis will usually occur within two yr or less, depending upon the edaphic conditions and sources of seed stock. Increases in turbidity associated with vehicle traffic also have short-term and long-term components; effects of both components are usually minor.

Fresh spoil lining the canal passage may interrupt existing small drainage channels. This results in localized changes in runoff patterns and amounts. The total area affected is site specific, but is usually insignificant when compared to the remaining area of unaltered levee.

Disturbances associated with dredging activities typically cause short-term displacement of sensitive wildlife species from the immediate area. Following the completion of the well (a matter of several months), these species may reenter nearby sites if suitable habitat conditions remain. Further short-term displacement may occur during maintenance or repair sessions.

4. Key attribute alterations

Key attribute alterations induced by this phase of oil and gas operations involve changes in land elevations. First-order effects include complete removal or burial of vegetation and the creation of a standing-water habitat in its place. Assuming adequate measures are taken to prevent erosion/turbidity problems, the remainder of the levee system is only slightly affected. In most cases the minor alteration of water flows on the levee system (due to ruts or fresh spoil placement) will not result in significant changes in vegetative composition. The ecosystems adjacent to the levee may be more severely altered (due to complete breaching) than the levee itself.

Wellsite preparation and operation.

1. Activity sequence

This phase of oil and gas operations is applicable only in those cases where wellsites per se (rather than access routes) are located within a given landform. This typically occurs only on wide spoil deposits. The equipment and techniques utilized during canal construction are also employed during preparation of the keyway, or wellsite. Typical dimensions approach 47 by 133 m (140 by 400 ft). Drilling and auxiliary equipment and supplies are transported and stored on barges. A specialized barge is employed for drilling. Its ballast tanks are flooded, it settles to the bottom, and piles are driven to anchor it firmly in place. Impacts

are primarily due to the increased turbidity and noise associated with traffic and drilling. These effects were discussed in the preceding section, "Site access by canal" and will not be considered further in this discussion. Drilling activities require one to three months. Test results indicate whether the well should be put into production or capped and shut down.

2. Primary ecological alterations

2.1 Loss of vegetation in and around wellsite due to excavation and covering

2.2 Creation of a water environment about 3 m (8-10 ft) deep

2.3 Increases in concentrations of suspended sediments and dissolved nutrients

2.4 Possible alteration of water flows due to fresh spoil disposal

2.5 Introduction of toxic materials to water system

2.6 Extended displacement of wildlife from immediate area

3. Attribute alterations

Construction of the wellsite is usually an extension of construction of the access canal; the dredge merely continued operation, disposing of fresh spoil in the water or on adjacent land. This work removes vegetation, insects, and early life forms of associated consumers from a maximum of 0.625 ha or 1.5 acres. This removal represents a loss of food and cover for all remaining consumer groups.

Short-term increases in suspended sediments and nutrients result from construction activities. Longer-term increases resulting from erosion of wellsite banks are of minor consequence. Neither the short-term nor the long-term effect usually has a significant impact on the adjacent systems. The fresh spoil may influence water flows on adjacent lands by isolating/filling depressions or blocking small drainages. The effects are usually localized and insignificant when compared to the remaining unaffected landform.

Replacement of land by bodies of standing water is essentially a tradeoff of terrestrial organisms for aquatic organisms. Aquatic invertebrate and

vertebrate groups from adjacent water systems will invade the new habitat. Waterfowl, alligator, and wading and shore bird use will increase if and when human activity becomes minimal. At the ecosystem level of organization, these changes are of little consequence.

During this phase of operations (one to three months), the new water environment is exposed to a wide variety of pollutants from drilling mud, sump discharge, and vehicle and equipment waste (exhausts, oil, grease, gasoline). The adjacent levee/spoil-bank system, however, is isolated from these substances. The kinds and amounts of these materials, and hence their effects on adjacent systems, are site specific. These considerations are treated in the appropriate ecosystems of this report.

Unlike the previous phases of activity, the preparation and operation of a wellsite involves continuous, noisy, and long-term disruption of sensitive wildlife species. However, it is not possible to predict or quantify the degree and/or significance of this displacement. The amount of noise and human activity necessary to permanently displace wildlife is unknown, but this factor should be seriously considered during this phase of oil and gas operations since it extends the effects of the project beyond the boundaries of the immediate site.

4. Key attribute alterations

The key attribute alterations include direct removal of vegetation and consumers and localized changes in land elevation. Since the area affected by excavation is usually small (relative to the undisturbed region), the loss of food and cover for supported consumers is insignificant. The changes in land elevation can influence waterflow regimes, but the total area affected is usually minor in comparison to the undisturbed land.

Installation and maintenance of lines.

1. Activity sequence

This section describes events primarily associated with pipeline activities but also addresses other types of lines such as surface supply and flowlines and, at times, overhead electrical lines. The activity sequence associated with line installation and maintenance is a function of the line type, line alignment with respect to the levee, and basic physical levee characteristics with respect to the adjacent marsh systems.

Line installation in the levee system consists of one of two primary types: (1) surface lines oriented along the levee and (2) pipelines that penetrate or breach levees. Surface lines include small supply lines or

flowlines that are laid by hand or with the aid of a lightweight vehicle which moves along the top of the levee. If the levee is extensively traveled by vehicles, the lines may be buried along the roadway. A small trencher or backhoe, moving along the roadway, is used. Levee vegetation is seldom so dense as to require major clearing operations. Digging or mowing operations are sufficient to remove grasses or small woody vegetation. Following line placement, the trench is backfilled, leveled, and abandoned. A section of buried line may be installed in one or two days. Surface lines can be placed at a faster rate. Vegetation recovery is usually completed within one growing season. Pipelines are often put through levees and spoil banks using either the flotation method or the push method. These two common techniques are described in some detail for line installation in the marsh systems. Essentially, the flotation technique involves having a floating dredge bore a wide gap (up to 15 m, or 50 ft, wide) through a levee as it places the pipeline. The push method involves having a dragline, either track-mounted or marsh-buggy mounted, excavate a narrow ditch through the levee for subsequent line installation. The ditch is usually completely backfilled when the push method is employed. However, in the case of the flotation method, the opening may be left as is; may be dammed by wood, steel, or earthen plugs; or the entire ditch may be backfilled and plugged with an effort made to restore the original elevation of the spoil bank or levee at that point. The push method seems to be more frequently utilized.

If earthen plugs are required, extra fill material is typically acquired from nearby marsh sediments. Water erosion, slumping, and subsidence may require periodic maintenance and repair of such plugs to maintain the plug at its initial height and thickness. Plugs may also be constructed of steel, alumninum, creosoted wood, concrete, or shell which stabilized reworked levee sites more efficiently.

2. Primary ecological alterations

2.1 Complete or partial vegetation removal, depending on line type (surface flowline, buried pipeline) being installed

2.2 Partial or complete removal of consumer groups, depending on line type and installation technique

2.3 Loss of soil structure within easement due to construction activities

2.4 Introduction of toxic chemicals from line leakage and construction activities

2.5 Sediment transport

3. Attribute alterations

As was previously discussed, attribute alterations associated with line installation may vary widely, depending on the type and size of line, site location, and placement method. Two general categories of lines, segregated according to the similarity of ecological effects, are described: (1) surface lines to supply drilling sites with water and gas and (2) permanently buried lines, which includes utility lines (electrical, water, gas, and telephone), flowlines (for brine disposal or hydrocarbon transport to treatment facilities), and gas/oil pipelines (for transport of product to distribution or additional processing centers). Surface lines and permanently buried utility lines or flowlines usually follow the levee alignment where maintenance and repair are easily accomplished. Surface line installation involves laying the pipe or cable segments directly on the surface. Vegetation in the activity area is crushed and trampled; the areal extent, however is limited to a few meters on either side of the line. If the line is buried, a continuous strip about 3 m (10 ft) wide is disturbed during the digging, line placement, refilling, and dressing stages. The entire process is usually quite rapid (requiring only a few days) and is typically restricted to the top of the levee. Vegetation recovery in coastal areas is usually completed within one growing season as the dominant life forms are normally rapid-growth grasses mixed with various herbaceous forbs or one or two characteristic woody composites (Baccharis spp. and Iva spp.). Since these ecological alterations are typically small in magnitude, very localized in areal effect, and usually occur on previously altered or reworked sites, such alterations are considered to be of minor consequence to the ecosystem. Other activities usually associated with levees, such as access roads, are capable of generating similar changes, but larger in magnitude, which have the potential for causing basic ecosystem alterations (see the discussion "Access to site" in the coastal uplands section of this chapter).

Gas and oil transport pipelines, the primary component of concern, are also included within the class of permanently buried lines. The alterations associated with this group of lines are usually more extensive, but basically similar, to those associated with buried utility lines and flowlines. The operational scale in all respects, however, is much larger and as a result, several formerly unimportant alterations subsequently require renewed consideration. A typical pipeline easement may be approximately 45 m (150 ft) wide, which would result in direct habitat alterations of 4.5 ha per km (18.2 acres per mi) of easement if the pipeline alignment followed the levee alignment. However, since the pipeline alignment usually follows a straight-line orientation between two points and the complex of levees and spoil banks is generated in a haphazard fashion, the amount of levee area affected by any particular pipeline operation is usually limited to one transect no wider than the construction easement width. Unless a particular levee exists in a high-density pipeline area, disturbed locations will be infrequent and widely spaced. The relative effect of this disturbed area with respect to the entire levee ecosystem is comparatively minor, since the pipeline simply goes through a small segment of the levee. Adjacent levee areas, which are

basically modified upland systems, remain relatively undisturbed by primary, secondary, or tertiary alterations.

Within the easement, however, system alterations may be severe. If the flotation method is utilized without backfilling so an open channel is produced, then that particular site is completely altered, but the functional integrity of the ecosystem remains essentially unchanged. The importance of this alteration depends essentially upon what proportion of the entire ecosystem the altered site represents. In most cases this percentage will be very small. In those instances where the ditch is backfilled and the levee segment rebuilt following line installation, the effects are essentially temporary. If the site is reshaped to approximate the original conditions and quickly stabilized and revegetated, then plant recovery can be accomplished within two growing seasons.

The following changes nevertheless occur within the easement corridor. Excavation means complete plant removal, usually of Spartina patens, Baccharis spp., Iva spp., and various herbaceous forbs. Consumers of limited mobility may die if they remain within the construction corridor. These would primarily be small mammals, a few insects, and perhaps a few semiaquatic vertebrates. Food and cover aspects are altered for all consumer groups utilizing the levee system. Subsequent effects on local consumer populations, however, are probably not noticeable due to the relatively small quantitative decrease.

Removal of plant cover and reworking of the levee substrates exposes bare sediments and alters soil structure. The erosive action of surface water transports sediments and nutrients into adjacent aquatic or marsh systems, increasing local water turbidity and sedimentation rates. Within the working easement, changes in soil structure occur as installation equipment variously compacts or loosens the soil. Compaction results from vehicular traffic of all types. Soil loosening occurs by digging, piling, and refilling activities. Decreased soil structure reduces water infiltration rates, locally increasing surface-water runoff also. If the disturbed area is flat and relatively small in areal coverage, this runoff is then moderated by surrounding vegetative cover. Otherwise, excess surface water can accumulate. Soil structure regulates not only the soil moisture regime but soil air, another important plant regulator, as well. These changes are probably of greater significance to well developed, mature plant communities. Plant recovery on a mature chenier would probably be quite different from the initial floristic composition due to changes in soil structure and the resultant soil-water/air-micropore equilibrium. On relatively recent spoil levees and banks where the substrate is essentially without structure, soil disturbances would have little subsequent influence on plant composition. Hardy pioneering species would reinvade the abandoned site, where essentially little substrate changes had occurred as a result of construction.

Even though conditions may be significantly altered within the easement zone, very little ecosystem alteration is effected. The primary signifi-

cance of such alterations at the ecosystem level of consideration, however, involves not the levee ecosystem itself, but its relationship to and regulatory influence on adjacent marsh ecosystems. As was pointed out in the treatment of each of the marsh systems, alteration of the hydrologic regime is considered to be the key ecosystem attribute alteration. The role played by levees in diverting or impounding surface-water flows is generally acknowledged to be highly important in determining ecosystem characteristics. Levees may be constructed for specific management purposes or they may result as a consequence of other coastal activities. Regardless of the reason behind its construction, an established levee can alter waterflow patterns. Pipeline construction can effectively alter established flows by (1) creating permanent new cuts (the flotation method without backfilling) in continuous levees or (2) creating weak or "soft" areas in a levee that can eventually fail as a result of continual water erosion. Such breaches may be considered either beneficial or detrimental, depending upon the intended function of the levee, the land use objectives, and the type of ecosystem changes that may result. If a series of levees were constructed with specific management objectives in mind, which is frequently the case on wildlife refuges, then unplugged cuts would certainly compromise their effectiveness. By changing inundation frequencies, average water depth, and duration of submergence, stipulations could be used to restrict such occurrences.

Soil toxicants may enter levee soils as a result of line leakage or rupture. Such toxicants may be composed of either concentrated brine or petrochemical derivatives. Site plant complexity may be reduced as intolerant species are replaced by hardy pioneer species capable of tolerating extreme soil conditions (i.e., high soil salinity, toxic ion concentration, or anaerobic conditions). Such effects are usually localized (radius of only a few meters) due to the restricted mobility of such substances in soil substrates. Large-scale spills or discharges are treated in the section of this discussion on spills and cleanup.

Disturbances associated with line installation typically cause short-term displacement of sensitive wildlife species from otherwise favorable habitats nearby. Following activity completion, these species reenter nearby sites if they remain essentially unaltered. Shortterm displacement may reoccur during infrequent maintenance or repair sessions.

4. Key attribute alterations

Alterations associated with line installation are a function of line size, site location, and placement method. Temporary surface lines, permanent overhead lines within road easements, and buried utility lines and flowlines typically generate short-term impacts of limited areal extent that generate little, if any, noticeable effects on consumer components. Gas and oil transportation pipelines, on the other hand, modify important ecosystem attributes. Key alterations involve: (1) the immediate removal of existing plant assemblages and habitat components necessary to local consumer groups; (2) the longterm substitution of new plant cover

types and community structure within, and sometimes adjacent to, the pipeline corridor, leading to subsequent changes in consumer species composition and population levels; and (3) the creation of gaps or weak spots in the levees which may subsequently alter the existing hydrologic regime in adjacent marsh systems.

Placement and operation of production facilities.

1. Activity sequence

With the exception of the delta marsh system, where large natural levees are common, production facilities are not normally located on levees. Production facilities noted in the delta marsh did include some individual separator units as well as an entire production complex situated on a natural levee. The complex utilized the levee's entire width (50 m, or 165 ft) and approximately 100 m (330 ft) of its length. The complex was relatively compact in order to fit in the limited area.

Placement of gathering flowlines from the well to the treatment facility requires activities as described for the installation and maintenance of lines; these include line survey, limited vegetation clearing, line installation and burial, and necessary site restoration. Construction of a processing complex and pipeline pumping stations follows the same basic activity sequence as that described for wellsite preparation, except that the placement of treatment, pumping, and storage facilities follows production foundation completion. Foundations are dug and concrete is poured to anchor or support structures and equipment. Brine disposal lines are installed to the disposal well, although brine-storage pits may occasionally be dug, if necessary. Routine operation, maintenance, and repair of treatment, pumping, and storage equipment are conducted within the confines of the site. Processing wastes are stored within the complex area, disposed of via flowlines, or transported off site immediately. Typical areal extent of a production facility is approximately 0.4 ha (1 acre).

2. Primary ecological alterations

2.1 Creation of an unvegetated production or pumping station site typically 0.4 ha (1 acre) or less in area

2.2 Removal of consumer groups within the facility site

2.3 Loss of soil structure due to movement of heavy machinery and construction activities

2.4 Introduction of toxic chemicals into the site's soils

2.5 Displacement of sensitive wildlife species from adjacent areas due to treatment processes and periodic human activity

3. Attribute alterations

Conversion of a well, if it should happen to be located on a natural levee, to production status creates few additional site alterations. All activities occur around the wellhead and central pad area. Operation consists of periodic maintenance and inspection visits. Equipment repair may occasionally require limited activity on the pad. Outlying portions of the pad revegetate following reduced disturbance levels. Consequently, considerations of the primary ecological alterations are concerned primarily with the construction and operation of a new central treatment complex.

Attribute alterations are similar in scope but smaller in scale than those of wellsite preparation. Site preparation for the treating complex removes all biotic components within the construction boundaries through cutting and clearing, grading, filling, and excavation activities. A direct loss of approximately 0.4 ha (1 acre) of sustaining habitat results for primary and secondary consumers. Food and cover elmination is particularly significant for small mammals, breeding songbirds, and soil invertebrates as proportionally larger portions of their resource base is altered. Secondary consumers are affected indirectly by the removal or reduction of herbivorous prey organisms as well as loss of cover. Nesting, foraging, escape, and resting areas are altered or destroyed. Avian and mammalian species vary widely in their tolerance to habitat disturbance. Some species tolerate little alteration, while others are found only in severely disturbed situations. In each case, species response is a function of time elasped and the creation or destruction of the required niche. Impact magnitude is a function of the species resource base (home range size) and the indispensability of the removed vegetation.

Removal of plant cover encourages surface-water runoff from barren, newly exposed sediments into adjacent aquatic systems. The resultant effects, partially regulated by slope, are usually restricted in areal extent. Interruption of detrital and nutrient cycles, with subsequent nutrient reserve depletion through runoff and leaching, inhibit rapid plant recovery following site abandonment and restoration attempts.

Soil structure within the construction easement is decreased by the compacting mechanisms of vehicular traffic, poured concrete foundations, and other impervious linings. Water infiltration rates are reduced by losses of soil porosity, thereby decreasing soil moisture and water percolation through the soil. Surface-water runoff, intensified by

compacted nonporous soils, lack of vegetative cover, and increased pad slopes and elevation, increases the transport of sediments and nutrients into adjacent systems.

Sediment and nutrient transport into adjacent wetlands or streams, however, may be of greater concern, as sediment introduction may cause significant system changes. Analysis, therefore, requires treatment through the appropriate aquatic ecosystem. Other soil structure aspects include soil moisture and soil moisture and soil aeration linkages to the flora; groundwater recharge, percolation, infiltration, and waterholding capacity linkages to the hydrosphere; and evaporation pathways to the atmosphere. Even though these aspects are seriously altered on the site (usually reduced), they are not considered for further analysis because either: (1) biotic effects are not relevant, since plant and animal recovery is precluded by operational activities, or (2) the comparative effects from a single small site on the ecosystem's hydrologic or atmospheric regimes are minor.

Small-scale releases of toxic substances inevitably occur at the complex in spite of the preventive and maintenance procedures instituted. Ecological alterations associated with larger spills and cleanup are treated as a separate section of this discussion. Specific data documenting the ecological effects of toxic chemical discharge into levee systems has not been readily attainable in the scientific literature. However, soil salinity, which restricts or prohibits vegetative growth, can be increased by seepage of oil field brine. Ecological alterations as a result of normal operational procedures are very restricted in areal extent due to the low-volume discharge and limited lateral mobility of substances through soil strata. Local biotic effects are a function of the substance's toxicity, quantity released, mobility through the food chain, persistence, and presence of biota on the site; processing and pumping activities preclude the presence of plants and animals on the site. The effects of chemical residuals on site restoration are treated in a separate section of this discussion. The recuperative abilities of the soil's micro-and macrobiota, as well as more complex flora, from petrochemical discharges are not well understood.

Disturbances associated with drilling and operational activities, vehicular traffic, human presence, and noise initially cause short-term wildlife displacement which may become long-term displacement. Nearby nesting, foraging, and escape cover are degraded by the proximity of continuous human activity and operational procedures. Sensitive wildlife species avoid otherwise favorable habitats because of human intrusion into formerly undisturbed environments; notable examples are the red wolf, bald eagle, and whooping crane. The magnitude of such displacement is difficult to assess, but it is still recognized as an important consideration which extends project impacts beyond the boundaries of the immediate site.

4. Key attribute alterations

The key attribute alterations involve primary and secondary effects. The primary effect is the direct long-term removal of plant assemblages and directly dependent consumer groups within the production site. The secondary effect is the associated long-term gradual changes in nearby biota that result from subtle microenvironmental alterations of soil structure, surface-water hydrology, soil toxicity, partial vegetation removal, and disturbance factors. Community response to such secondary alterations is expressed by the different plant assemblages which develop through competition under new abiotic conditions. The species composition and population levels of the consumer groups may or may not respond to secondary habitat alterations. Response is a function of the areal extent of the change, the size of the consumers' resource base, and sensitivity of the consumer to altered habitat conditions. Sensitive wildlife species may abandon otherwise favorable habitats because of operational and vehicle-associated disturbances.

Spills and cleanup.

1. Activity sequence

Accidental discharge of oil, gas, field brine, or other substances occurs as a result of equipment failure, improper equipment operation, or human error. Built-in safety mechanisms, if present, are activated automatically to limit the quantity of discharge. Field personnel, once aware of the spill or leak, immediately initiate procedures to confine discharges to the smallest possible area. Containment berms or levees are erected, if the site is large enough, to prevent further liquid expansion, or shallow ditches may be excavated to intercept, channel, and concentrate the effluent into collection sites. Draglines and marsh buggies are utilized for such earthwork. Staw or hay is used to adsorb smaller, less accessible quantities that vacuum units cannot remove. Vegetation coated with oil or its derivates is either cut or burned. If burning is planned, the contaminated areas are enclosed by fire lanes. Contaminated soils may be excavated, removed, and replaced with other fill materials. Soil replacement signals completion of the cleanup phase and the beginning of site restoration.

2. Primary ecological alterations

Alterations will vary according to levee size, cleanup method, toxicity of the chemical substances released, and spill size.

2.1 Partial or complete removal of vegetation within the spill and cleanup site; magnitude varies according to spill size

2.2 Loss of consumers from the affected area

2.3 Increase in soil toxicants from petrochemicals and brine

2.4 Loss of soil structure due to excavation and other earthmoving activities or because of petrochemical cohesion of soil particles

2.5 Possible loss of soil nutrients due to soil extraction

2.6 Possible increase in available nutrients due to burning of contaminated vegetation

3. Attribute alterations

Plant assemblages are removed or altered by: (1) the toxic effects of brine or hydrocarbons; (2) the cleanup procedures; or (3) modifications of the soil's microenvironmental regime. Areal extent is a function of the spill size. If large quantities of the material are not dispersed rapidly over wide areas, mobile terrestrial consumers capable of avoiding contaminating substances leave the area. Less mobile consumers may be coated with oil or other noxious effluents and die; food and shelter resources become so degraded as to provide minor benefits to all consumers which previously utilized the site. Discharge of brine effluent alters or removes plants because of physiological stresses produced by osmotic water losses. Loss of plant cover, either through immediate direct means such as cutting and burning, or through slower acting mechanisms such as brine increasing soil salinity, means locally increased soil heat, soil moisture evaporation, and surface-water runoff. The magnitude and subsequent implications for the biotic systems depends upon too many unknown variables (spill size, vegetation type, cleanup method, extent of plant removal, site use, etc.) to warrant further consideration.

Cleanup of residual oil or oil quantities too small to efficiently remove with conventional collection techniques is accomplished by burning the contaminated site. Producers, and consumers which do not abandon the site, are removed. Fire accelerates biomass decomposition, thereby increasing the availability of soil nutrients which enhances plant reestablishment.

Excavation and removal of soils impregnated with oil, brine, or other deleterious substances alters soil structure and soil nutrient reserves. Loss of available nutrients impoverishes the site, slowing down later plant recovery. The consequence of soil structure alterations is more important, as this physical feature regulates several important aspects of later plant establishment and growth. Chief among these are soil

moisture and soil air characteristics. Dissimilar substrates (in salinity, texture, structure, fertility) alter microenvironmental conditions such that subsequent plant assemblages different from the original flora may result. The significance of such abiotic alterations upon biotic components is a function of the lateration's areal extent, existing site conditions (whether natural or impacted), and future site uses.

Wildlife displacement will probably be temporary, lasting only as long as is necessary to clean up the site and repair equipment. Cleanup activities concentrated within an existing use area generate few additional disturbances. In some instances displacement actions may need to be deliberate to scare wildlife and waterfowl away so they will not come in contact with noxious materials.

4. Key attribute alterations

The primary alteration is the complete or partial removal of vegetative components resulting from several aspects of the cleanup procedure. Removal produces community disruptions which require reestablishment of new equilibrium conditions through competitive biotic processes. Dominating influences of soil moisture and solar energy are reordered such that resource availability is increased, at least temporarily, allowing suppressed flora or earlier seral stages to appear. Consumer response varies by species, size of the area affected, and the extent of the floristic change. Cleanup methodology determines site alterations that occur, and whether subsequent biotic changes are temporary or long term.

Insufficient data exist to facilitate accurate evaluation of whether greater detrimental effects result from the introduction of petrochemicals into levee systems or from the cleanup efforts (cutting, burning, soil extraction) directed at their removal.

Unless a levee is fairly extensive and has a primary pipeline or flowline rupture on it, spills are going to be of little consequence to this system.

Site shutdown and restoration.

1. Activity sequence

Completion of exploratory drilling, removal of production facilities, pipeline installation and trench backfilling, spill cleanup, or road abandonment usually signals initiation of the shutdown and site restoration phase. Structures, equipment, concrete foundations, pipes, wellcasings, drilling mud, and other artifacts of oil production are removed if they possess salvage or reuse value. Otherwise, only as much attention is paid to

restoration procedures as is required by Federal and state regulations, lease stipulations, and general company policy. Typically, restoration includes removing or burying toxic substances, refilling all pits, knocking down interior earthen levees, and generally leveling the site. Original site contours may be reestablished. Natural processes are usually relied upon to reestablish ground cover. If revegetation is conducted, commercially available seeds of hardy very adaptable grasses, such as bermuda grass, are sown on disturbed soils. Fertilization, mulching, and final top dressing may occur. Vehicles generally exit after distributing the seed and dressing the site. The site restoration procedure is normally not a very extensive operation on the levee system.

Access canals that are cut through natural or artificial levees are refilled only on rare occasions after they cease to be used. Because of bank erosion, compaction and subsidence, there is rarely enough material on site to repair them. However levees are often repaired by reinforced plugs when canals are taken out of active service.

2. Primary ecological alterations

2.1 Increase in soil structure due to grading, filling, and plowing

2.2 Decrease in soil toxicants due to removal of oil-, brine-, and mud-contaminated soils

2.3 Increase in available nutrients with fertilization

2.4 Increased producer biomass by reseeding or replanting

3. Attribute alterations

Procedures that reestablish soil structure damage by previous construction and operational activities are most beneficial; soil air concentrations increase because of improved soil porosity, thereby enhancing the soil environment for plant establishment. Soil moisture not only provides necessary water for the plant, but it also moderates the extreme effects of soil heat and soil salt content. These two aspects are thought to be of minor importance, however.

Replacement of leached and eroded nutrients through fertilization and removal of toxic soil materials (brine, petrochemical wastes, and drilling substances) speed natural recovery processes, enabling establishment of more complex plant assemblages without requiring preceding seral stages to develop necessary soil conditions. Fertilization has the greatest petential for long-term benefits by improving soil structure,

increasing biological activity in surface litter and soil, balancing the soil nutrient status, and reducing mobility of toxic elements. Fertilizers may speed cycling of nutrients by mobilizing anions and cations if biomass exists that can capture them. However, if not captured, the more mobile ions may leak to shallow groundwater aquifers, drainage ditches, streams, and marshes.

Artificial revegetation facilititates rapid reintroduction of producer biomass on denuded areas, thus speeding the return to initial site conditions. Biotic feedback mechanisms which regulate soil structure, soil heat, nutrient availability, soil moisture, and surface-water runoff continually enhance site micro-environmental quality, thereby facilitating reestablishment of more stable plant assemblages. Native plant species provide food and cover resources most compatible with requirements of nearby consumer groups. Although the selection of suitable plant species is limited in salt and brackish marsh systems, many diverse grasses, sedges, forbs, and a few select shrub species are available for levee revegetation in fresh and delta marsh systems. Climax species ecotypes are desirable if site soil characteristics are not greatly altered, particulary if reestablishment to original site conditions is preferred. On more adversely disturbed sites (dry, infertile), pioneer or seral species can be utilized as site conditioners to aid in the natural succession to climax species. Land management objectives, however, regulate what cover type is planted and, thus, which specific consumer groups are encouraged by habitat expansions.

Mulch, a temporary surface covering of straw, wood chips, asphalt emulsion, jute matting, or similar materials, moderates several important surface soil aspects that regulate plant germination and growth. Mulch application on disturbed sites moderates soil temperature fluctuations, retains soil moisture, contributes to soil fertility, and, in conjunction with soil structure, increases surface-water infiltration.

Restoration typically occurs on sites which previously supported various types of displacement-producing activities. Displacement, if it were to occur, has already been effected by such prior processes. Additional effects are probably minor and short term in nature. Site shutdown and restoration should encourage the return of sensitive wildlife species.

4. Key attribute alterations

Restoration of soil structure is the pivotal aspect of site rehabilitation which controls other regulatory parameters that determine the suitability of the edaphic environment for plant growth. Soil structure regulates the infiltration of soil air and soil moisture, surface-water runoff, water permeability, and water-holding capacity. Second-order effects include regulation of soil erosion, nutrient availability, and soil salinity. Several management techniques are available which accelerate site recovery and allow selection of specific plant assemblages for reestablishment.

7. SUMMARY OF SUCCESSFUL AND PROPOSED STIPULATIONS

The following is a listing of successful, modified, and proposed methods and standards for managing oil and gas activities in coastal refuges. The listing is organized according to ecosystem. Within the listing for each ecosystem, the methods and standards are organized according to activity phase: preexploration, access to site, site preparation and operation, installation and maintenance of lines, placement and operation of production facilities, spills and cleanup, and site shutdown and restoration. This is the same organization that has been used throughout this report.

The methods and standards in this summary are not all of those identified during the course of the study. Instead, the methods and standards have been culled to remove redundancies and to provide the best-worded stipulations, so that quick reference to a particular set of stipulations can be made by refuge managers.

Preexploration activities are frequent, short term, and are carried out by contractors without long-term experience at any one location. Consequently the methods and standards identified for preexploration constitute a complete package, from entry of surveyors to cleanup and restoration. Other phases, however, are generally parts of long-term oil and gas operations. Since cleanup and restoration actions are similiar for all other phases of operations, they have been dealt with as separate phases. Thus, if a tank battery and production site are being planned, stipulations for placement and operation of production facilities, spills and cleanup, and site shutdown and restoration should be consulted.

The methods and standards presented here represent the known functions of the particular ecosystems covered. Because of the need to generalize to cover as many circumstances as possible, the list includes more stipulations than might be needed to apply to every case. Consequently a land manager should study the particular development at hand and choose the methods and standards appropriate to the situation.

There are many cases where a given stipulation is applied to more than one ecosystem and/or more than one activity. Instead of using cross-referencing

symbols, such a stipulation is repeated in every case to which it applies; this organization allows rapid access to needed stipulations.

The symbols that are used to identify a particular stipulation, consisting of letters and numbers and appearing to the immediate left of the stipulation, are those developed in the original long version of this technical report. The first letter (U,S,B,F,D, or L) refers to the ecosystem type (uplands, salt marsh, brackish marsh, fresh marsh, delta marsh, or levees and spoil banks); the number is the reference number for a given stipulation; and the trailing letter refers to whether or not a stipulation is a modification of an existing stipulation (M), a stipulation proposed by the authors (P), or an existing stipulation that has been or is being used on one of the six refuges (no trailing letter).

COASTAL UPLANDS

Seismic Preexploration

General.

U-1P Before initiating a seismic survey, the contractor shall meet with the land manager and provide a location map indicating all proposed shot lines, necessary equipment storage areas, and project specifications.

U-2P All cutting, clearing, or other vegetation disturbances shall be confined within the boundaries of the staked seismic easement.

U-4P Following preliminary seismic lane alignment, the land manager may conduct a field survey to inspect the specific ecological characteristics of the test site(s). In the event of an important ecological discovery, the company agrees to relocate the seismic lane to a reasonable extent to protect critical plant assemblages, unique natural areas, important wildlife areas, or other desirable ecological features.

Timing of seismic activities.

U-9P Seismic activities shall be prohibited from (date) to (date) in order to minimize interference with (nesting, breeding, migration, etc) activities of the (Specific species). (Exact dates will vary with species and with location of the refuge.)

Surface disturbance.

U-7P Seismic activities shall be conducted in such a manner as to create a minimum disruption of soil horizons and, unless otherwise specifically authorized by the land manager, all such soil disturbances shall be confined within the seismic easement.

Vehicle movement.

U-3P Unless otherwise specifically authorized by the land manager, all vehicular activity shall be confined within the boundaries of the staked seismic easement.

U-6P Entrance to and travel within the refuge shall be over established routes of travel or as otherwise designated by the land manager, and such travel shall be restricted to that required for installation and operation of seismic tests. No additional service roads shall be constructed unless specfically authorized in writing by the land manager.

Shot hole treatment.

U-2 The shot holes shall be thoroughly filled and plugged after drilling.

Cleanup and restoration.

U-3M Any damage to existing surface vegetation, water channels, or other physical features will be restored to original site conditions immediately upon the completion of the seismic survey. Restoration shall include, but is not limited to: grading to return original site contours and drainages, discing or plowing to restore former soil structure, and revegetation with native species to replace damage flora.

U-5P Following completion of the seismic survey, the land manager may conduct an on-site inspection to verify that restoration or mitigation of any environmental damages has been satisfactorily completed and may, at that time, require additional measures necessary to satisfy permit requirements.

U-8P If it becomes necessary to remove topsoil while bulldozing a seismic corridor, the topsoil shall be separated from other

material stockpiled, stored, and replaced uniformly to its former location following completion of seismic activities. Other site restoration measures requested by the land manager may include, but are not limited to, erosion control, revegetation, and discing/plowing of compacted soils.

Access to Site

General.

U-10P Prior to any construction activities, the contractor shall provide the land manager with details, plans, specifications, and maps indicating road easement location and dimensions, road alignment, road width, and specific provisions for maintaining existing drainage integrity.

U-11P Following preliminary road alignment, the permittee will allow the land manager 14 days to conduct a field survey to determine the logical significance of the area to be traversed. Should an important or unusual ecological feature be encountered, the permittee agrees to relocate the road to an extent reasonably necessary to protect critical plant assemblages, unique natural areas, critical wildlife areas, or other desirable ecological features.

Vehicle movement and right-of-way use.

U-12P All vehicular traffic and construction activities shall be strictly confined within the road easement boundaries. Vegetation damage, equipment and supply storage, and removal of fill materials from outside these boundaries are prohibited, unless otherwise authorized in writing by the land manager.

U-17P In the control of vegetation within road rights-of-way, no herbicide or toxicant shall be used without first obtaining written permission from the land manager as to the type or kind of chemical to be used and the rate, method, and time of application.

U-19P The permittee shall take such measures to prevent soil erosion from starting within the rights-of-way as the land manager may prescribe and shall take such other conservation measures, including restoration of disturbed ground surfaces, mulching, and revegetation, that may be requested by the land manager.

Roadway specifications.

U-13P The contractor shall incorporate design criteria which restrict road width to the minimum area required for transport of equipment and personnel to the site. Easement wideth shall not exceed 10 m (30 ft) unless otherwise authorized in writing by the land manager.

U-16P All existing drainage patterns within the road easement shall be maintained uninterrupted, by the use of conduit, culverts, bridges, or other applicable techniques as specified and authorized by the manager.

Cleanup and restoration.

U-14P Upon completion of any oil and gas activity which no longer requires the use of an existing roadway, the permittee shall, unless otherwise directed by the land manager, remove the access road and restore the easement to its original preconstruction condition as specified by the land manager. Restoration measures shall include, but are not limited to: reestablishment of former surface contours, restoration of soil structure, fertilization, revegetation with native flora, restoration of former drainage patterns, and removal of excess fill materials from the refuge.

U-18P All toxic construction refuse (oil, grease, gasoline, paint, and other petrochemical derivatives) shall be centrally stored and disposed of off the refuge within 10 days following completion of road construction. Disposal on the refuge is prohibited.

Wellsite Preparation and Operation

General.

U-20P Prior to commencement of any field work, permittee shall meet with the land manager and provide specifications of the operation including, but not limited to: (1) maps showing locations of wellsites, access routes, pad dimensions, and equipment storage areas; (2) information concerning sizes, types, and numbers of equipment to be used; and (3) a time schedule. The permittee shall agree to a reasonable adjustment in order to minimize the disturbance of water flows, critical plant assemblages, unique natural areas, important wildlife areas, or other identified ecological features. All activities shall be confined to those areas as finalized on the attached maps.

U-21P Following preliminary pad location, the permittee will allow the land manager 14 days to conduct a field survey to determine the ecological significance of the area. Should an important or unusual ecological feature be encountered, the permittee agrees to relocate the wellsite and well pad to an extent reasonably necessary to protect critical plant assemblages, unique natural areas, critical wildlife areas, or other desirable ecological features.

U-23P The permittee shall provide the land manager with a design which restricts the pad size to the minimum area required to conduct drilling operations, store equipment and supplies, and contain waste materials. Pad easement shall not exceed 10,000 m (2.5 acres), unless otherwise authorized by the land manager.

Mud and waste management.

U-27P The permittee agrees to use portable mud tanks in connection with the drilling operations in place of an earthen mud pit. If earthen pits are required, they will be lined to prevent seepage or leakage of pit materials into the soil.

U-29P All drilling mud, drilling wastes, equipment leakage, and other petrochemical substances shall be collected and centrally stored in impervious containers. Wastes shall be immediately disposed of off the refuge following completion of drilling operations. Waste disposal on the refuge is prohibited.

U-30P No drilling equipment or processes of such quality and type that permit or cause the release of oil, field brine, or other oil field contaminants or pollutants into the environment shall be utilized on the refuge.

Surface damage.

U-25P All existing drainage patterns within the pad-site easement shall be maintained uninterrupted, by the use of conduit, culverts, or other applicable techniques as specified and authorized by the land manager.

U-26P The permittee shall take such measures to prevent soil erosion from starting within the entire easement area and still implement prescribed conservation measures, including restoration of disturbed ground surfaces, mulching, and revegetation, that may be requested by the land manager.

Cleanup and restoration.

U-24P Upon completion of any oil and gas activity which no longer requires the use of an existing drilling pad, the permittee shall, unless otherwise authorized by the land manager, remove the pad and restore the entire easement to its original preconstruction condition or better, as specified by the land manager. Restoration measures shall include, but are not limited to: reestablishment of former surface contours, restoration of soil structure, fertilization, revegetation with native flora, restoration of former drainage patterns, and removal of excess fill materials from the refuge within one year after the drilling operation is completed.

Installation and Maintenance of Lines

Facility planning.

U-31P Prior to commencement of any field work, permittee shall meet with the land manager and provide specifications of the operation including, but not limited to: (1) maps showing locations of pipeline alignment, access routes, easement dimensions, and equipment storage areas; (2) information concerning sizes, types, and numbers of equipment to be used; and (3) a time schedule. The permittee shall agree to a reasonable adjustment in order to minimize the disturbance of water flows, critical plant assemblages, unique natural areas, important wildlife areas, or other desirable ecological features. All activities shall be confined to those areas as finalized on the attached maps.

U-32P Following preliminary (type of line) alignment, the land manager may conduct a field survey to inspect the specific ecological characteristics of the proposed alignment. Should an important or unusual ecological feature be encountered, the permittee agrees to relocate the alignment in order to protect the ecological feature.

U-34P The permittee shall incorporate design criteria which restrict working easement widths to the minimum area necessary for (type of) line installation, equipment transport, and minimum supply storage. Easement width shall not exceed (desired width) meters, unless otherwise authorized by the land manager.

U-36P Upon completion of the project, the permittee will notify the land manager in writing that all work has been completed, and the land manager within 30 days from the receipt of said notice

may inspect the (type of) line easement and require such additional work as may appear necessary to the land manager in order to conform to the permit requirements.

U-37P Turnarounds and access ways to and on the pipeline alignment shall be predetermined and located whenever possible in nonvegetated areas. Storage of pipe and other materials shall be in nonvegetated areas or at designated locations. All vehicular equipment traffic shall be within the narrowest practical confines on either side of the centerline of the pipeline right-of-way.

U-38P All existing drainage patterns within the (type of) line easement shall be maintained uninterrupted by the use of conduit, culverts, bridges, or other applicable techniques as specified and authorized by the land manager.

U-39P The permittee shall notify the land manager prior to any major improvement or removal of any facility; upon completion of the pipeline, the permittee shall furnish the land manager with an accurate survey of the pipeline "as built," including a typical cross section.

General agreements.

U-4 The Company shall do all within their power, both independently and upon request by authorized refuge personnel, to prevent and suppress forest, grass or brush fires on the permitted land and in the vicinity, including making available personnel for the suppression of such fires.

U-5 In the control of vegetation within the rights-of-way no herbicides or toxicants shall be used without first obtaining permission in writing from the USFWS as to the type or kind of chemical to be used, the rate and method of application and the time of application.

U-6 Entrance to and travel within the refuge shall be over established routes of travel or as otherwise designated from time to time by the refuge manager, and such travel shall be restricted to that required for construction, maintainance and servicing the power line and the operating equipment. No additional service roads shall be constructed unless specifically authorized by the refuge manager.

U-35P Unless otherwise specified by the land manager, all overhead electrical lines shall be routed within existing road easements or other easement corridors. Where soils and hydrology are suitable, permanently buried lines shall be placed in road easement or in the road centerline using plowshare techniques.

Vehicle access and movement.

U-33P During pipeline construction and subsequent operational phases, all ingress, egress, and inner refuge movement of the company's vehicles and equipment as well as the placement of all construction materials, operational equipment, and spoil shall be limited to the easement described herein, unless otherwise authorized in writing by the land manager.

Line depth below surface.

U-7 Underground cable (or flowlines) shall be placed not less than 0.85 m (30 inches) below the natural surface of the ground.

Backfilling.

U-8 The ditch for underground cable or flowlines shall be back-filled in a manner acceptable to the refuge manager.

Maintenance.

U-9M To clear and keep clear the lands within the (type of line) line rights-of-way to the extent and in the manner prescribed by the land manager. Unless otherwise specified by the land manager, mowing shall be conducted every (frequency interval).

Placement and Operation of Production Facilities

Facility planning.

U-41P Following preliminary site layout, the land manager may conduct a field survey to inspect the specific ecological characteristics of the proposed site. Should an important or unusual ecological feature be encountered, the permittee agrees to relocate the complex to a reasonable extent to protect critical plant assemblages, unique natural areas, important wildlife areas, or other desirable ecological features.

U-42P All vehicular traffic and construction activities shall be strictly confined within the production site easement boundaries. Vegetation damage, equipment and supply storage, and removal of fill materials from outside these boundaries are prohibited, unless otherwise authorized in writing by the land manager.

U-43P The permittee shall provide the land manager with a design which restricts the pad size to the minimum area required to conduct processing operations, store equipment and supplies, and contain waste materials. Pad easement shall not exceed 5,000 m^2 (1.25 acres) unless otherwise authorized in writing by the land manager.

U-46P All primary drainage patterns within the production facility easement shall be maintained uninterrupted by the use of conduit, culverts, bridges, or other applicable techniques as specified and authorized by the land manager.

Restoration.

U-44P Upon completion of any oil and gas activity which no longer requires the use of an existing processing site, the permittee shall, unless otherwise authorized by the land manager, remove the pad and restore the entire easement to its original preconstruction condition or better, as specified by the land manager. Restoration measures shall include, but are not limited to: reestablishment of former surface contours, restoration of soil structure, fertilization, revegetation with native flora, restoration of former drainage patterns, and removal of excess fill materials from the refuge.

U-45P Following removal of production facilities, the land manager may conduct an on-site inspection to verify that restoration or mitigation of any environmental damages has been satisfactorily completed and may, at that time, require additional conservation measures necessary to satisfy permit requirements.

General.

U-12 In the control of vegetation within the rights-of-way and the tank battery facility site, no herbicides or toxicants shall be used without first obtaining permission in writing from the USFWS as to the type of chemical to be used, and the rate and method of application and the time of application.

U-47P All treatment and processing equipment used by the permittee that could cause oil, gas, or field brine pollution or contamination, such as pumps, valves, hose, hose connections, tanks,

and pipelines, must be maintained and repaired so as to prevent leakage or waste. Any inevitable waste in proximity to the source must be confined so as to prevent escape that might otherwise occur as a result of rains, high water, or natural drainage.

U-49P Utilization and disposal of used or waste solid materials resulting from production processes or treatment equipment, such as oil-contaminated sand, brine sediments, chemical precipitates, or other filtrable solids, as fill material is prohibited on the refuge.

U-51P The permittee shall take such measures to prevent soil erosion from starting within the easement as the land manager may prescribe and shall take such other conservation measures, including restoration of disturbed ground surfaces, mulching, and revegetation, that may be requested by the land manager.

Patrolling and inspecting pipelines.

U-10 Exceptions to the 305-m (1000-ft) minimum ceiling restrictions are made for pipeline flights.

Spills and Cleanup

Contingency plan.

U-52P The permittee shall file an "accidental spill" contingency plan with the land manager prior to initiating well-drilling, pipeline, or production facility operations. The plan shall outline, but is not limited to, proposed procedures to report, contain, and clean up all types of oil/brine spills in terrestrial systems, as well as proposed reclamation measures for site restoration.

General.

U-53P All spills or accidental discharges of oil, field brine, or other petrochemical substances of greater than (quantity) liters shall be reported to the land manager within 24 hr.

U-54P Containment and cleanup of an accidental spill shall be conducted as soon as possible following its discovery, unless otherwise specified by the land manager.

Methods and techniques.

U-14 Drain water body containing oil from spill into the adjacent diversion ditch. As oil collects here, it is to be picked up with a vacuum truck. Bring in dozers and cut fire lanes around oil covered vegetation and burn off the area.

U-55P In the control of spilled oil or oil-field substances no dispersants, emulsifiers, or other chemical agents shall be used without permission in writing from the land manager as to the type or kind of chemical to be used and the rate, time, and method of application.

U-56P In the event of an accidental spill or discharge of oil, brine, or any other petrochemical substance, the permittee shall excavate and remove contaminated soils and replace such soils with soils of the same type and horizon, unless otherwise specified by the land manager.

Restoration.

U-57P Following the cleanup phase of a brine or oil spill, the permittee shall, unless otherwise authorized by the land manager, restore the affected area to its original or better condition as specified by the land manager. Restoration measures shall include, but are not restricted to: reestablishment of former surface contours, restoration of soil structure, fertilization, revegetation with native flora, restoration of former drainage patterns, and replacement of topsoils.

Site Shutdown and Restoration

Shutdown.

U-58P In the event all or a portion of the facilities are removed from the refuge as the result of the termination of operations or for other reasons, the permittee shall completely remove all poured concrete foundations and walls, asphalt surfaces, compacted shell and concrete pads, or other impervious surfaces, unless otherwise specified by the land manager.

U-63P In the event all or a portion of the facilities are removed from the refuge as a result of the termination of operations or for other reasons, the permittee shall grade and level the surface

contours to as near the original conditions as possible, reestablish original surface drainage patterns, and remove imported or excess fill materials from the refuge as specified by the land manager.

Restoration.

U-16M The permittee shall take such measures to prevent soil erosion from starting within the (type of) site as the land manager may prescribe and shall take such other conservation measures, including restoration of disturbed ground surfaces, weed control, and the revegetation of the rights-of-way with native plants, as may be requested by the land manager.

U-59P Upon completion of exploratory drilling, gas and oil production, pipeline repair, and oil and brine spill cleanup, the permittee shall excavate and dispose of soils contaminated with brine, oil, drilling mud, or other deleterious substances and shall replace such soils with uncontaminated soils of similar type, fertility, texture, and horizon origin.

U-60P Site soil restoration shall include the discing, plowing, or fragmentation of all compacted soil surfaces to a depth of not less than (desired depth) cm.

U-61P In the installation of buried pipelines and major flowlines, the permittee shall, whenever possible, strip, separately store, and when line installation and burial is completed, replace the topsoil uniformly to its original position in the soil profile.

U-62P Site soil restoration shall include mulching and fertilizing; the type, rate of application, and number of applications shall be specified by the land manager.

U-64P Following completion of restoration procedures, the land manager may conduct an on-site inspection to verify that restoration or mitigation of any environmental damages has been satisfactorily completed and may, at that time, require additional conservation measures necessary to satisfy the land manager.

U-66P Prior to starting extensive restoration field work, the permittee shall meet with the land manager and provide specifications of the operation including, but not limited to: (1) maps showing features to be restored, points of alterations, and access routes; (2) information concerning sizes, types, and numbers of equipment to be used; and (3) a time schedule. The permittee shall agree

to reasonable modifications in order to minimize the disturbance of desirable water flows, wildlife concentrations, or other desirable ecological features. All activities shall be confined to those areas as finalized on the attached maps.

U-67P The permittee shall revegetate all restoration areas with native plant species as may be specified by the land manager; such native materials may include trees, shrubs, grasses, and herbs. The use of exotic plant species must be authorized by the land manager.

U-68P As specified by the land manager, restoration procedures may require the construction of nesting platforms, denning sites, or other wildlife habitat improvements, such as food plantings, to replace natural features lost or altered by permittee activities.

SALT MARSH

Seismic Preexploration

General.

S-1M Prior to initiating any field work, permittee shall meet with the land manager and provide specifications of the operation including, but not limited to: (1) maps showing locations of shot lines and holes, routes of access and travel, and equipment storage areas; (2) information concerning sizes, types, and numbers of equipment to be used; and (3) a time schedule. The permittee shall agree to a reasonable adjustment of schedule or alignment of shot lines in order to minimize the disturbance of water flows, critical plant assemblages, unique natural areas, important wildlife areas, or other desirable ecological features. All activities are confined to those areas as finalized on the attached maps.

S-5M Permittee will have fire suppression and controlling equipment approved by the land manager on the site at all times. At signs of fire, permittee will expend manpower to extinguish blaze.

Timing of seismic activities.

S-7 The survey must be completed by October 15. (Exact date will vary with species of concern and with location of refuge.)

Surface disturbance.

S-9M At no time shall the operation disturb any improvement, structure, boat channel, waterway, or land corner monument.

Effects on wildlife.

S-10M Permittee shall not harass or disturb any wildlife during any phase of the seismic survey. Should it appear necessary to alter a nest, bed, den, or home, all operations shall be halted until the land manager grants approval or provides an acceptable alternative.

Retrieval of equipment.

S-13 At the conclusion of the authorized seismic survey, all pipe will be pulled from shot holes and the said shot holes plugged in a manner acceptable to the refuge manager.

Cleanup and restoration.

S-16M Permittee shall report in writing to the land manager unanticipated damages to waterflow pathways, vegetation, wildlife, and all other physical, biological, or chemical elements of the refuge. At the option of, and in a manner determined by, the land manager, the damages will be repaired to his satisfaction immediately following completion of the survey. All costs are to be borne by the permittee.

S-17M During operations the permittee shall hold all equipment, materials, debris, and trash in a fashion and location acceptable to the land manager; such items shall be removed from the refuge immediately upon project completion.

Shot hole map.

S-20 At the conclusion of the survey, the permittee will furnish the refuge manager with an accurate map showing the location of all lines and shot holes.

Gravity Preexploration

General.

S-21M Prior to initiating any field work, permittee shall meet with the land manager and provide specifications of the operation including, but not limited to: (1) maps showing locations of stations, routes of access and travel, and equipment storage areas; (2) information concerning sizes, types, and numbers of equipment to be used; and (3) a time schedule. The permittee shall agree to a reasonable adjustment of schedule, stations, or support equipment in order to minimize the disturbance of water flows, critical plant assemblages, unique natural areas, important wildlife areas, or other desirable ecological features. All activities are confined to those areas as finalized on the attached maps.

Timing of activities.

S-22 Must have survey completed by October 15 (Exact date will vary with species of concern and with location of refuge.)

Effects on wildlife.

S-23M Permittee shall not harass or disturb any wildlife during any phase of the gravity survey. Should it appear necessary to alter a nest, bed, den, or home, all operations shall be halted until the land manager grants approval or provides for an acceptable alternative.

Vehicle movement.

S-1P A maximum of one surface vehicle may be used during the survey. The vehicle must consolidate all passages across the marsh and must not run over the same trail twice.

Cleanup and restoration.

S-25M Permittee shall report in writing to the land manager unanticipated damages to waterflow regimes, vegetation, wildlife, and all other physical, biological, or chemical elements of the refuge. At the option of, and in a manner determined by, the land manager, the damages will be repaired to his satisfaction immediately following completion of the survey. All costs are to be borne by the permittee.

Site Access by Leveed Road

General.

S-26M Prior to initiating any field work, permittee shall meet with the land manager and provide specifications of the operation including, but not limited to: (1) maps showing locations of borrow pits and levees, routes of access and travel, and equipment storage areas; (2) information concerning sizes, types, and numbers of equipment to be used; and (3) a time schedule. The permittee shall agree to a reasonable adjustment of schedule or alignment of borrow pits and levees in order to minimize the disturbance of water flows, critical plant assemblages, unique natural areas, important wildlife areas, or other desirable ecological features. Al activities are confined to those areas as finalized on the attached maps.

Vehicle movement and right-of-way use.

S-4P All road-building equipment is confined to the immediate area of construction.

S-6P The permittee shall take soil and resource conservation and protection measures (including weed control), to the extent and in a manner directed by the land manager, on the land covered by the right-of-way.

S-9P The right-of-way granted shall be for the specific use described and may not be construed to include the further right to authorize any other use within the right-of-way unless approved in writing by the land manager.

S-3P Permittee shall grade and level an earthen levee only where absolutely necessary; boards shall be placed directly on marsh vegetation whenever practicable. Bridges and culverts shall be installed, maintained, and replaced in a manner acceptable to and determined by the land manager.

Borrow pits.

S-2P Excavation must result in intermittent borrow pits (staggered or plugged) no longer than 0.4 km (0.25) and separated by plugs described in the attached plans.

Effects on wildlife.

S-7P Permittee shall not harass or disturb any wildlife during any phase of the road building. Should it appear necessary to alter a nest, bed, den, or home, all operations shall be halted until the land manager grants approval or provides for an acceptable alternative.

Map of operations.

S-8P Following the completion of the road, the permittee shall provide an accurate map indicating locations and types of all land surface alterations that were realized during the operations.

Site Access by Canal and Wellsite Dredging

General.

S-10P Prior to initiating any field work, permittee shall meet with the land manager and provide specifications of the operation including, but not limited to: (1) maps showing locations of canals and spoil deposits, routes of access and travel, and equipment storage areas; (2) information concerning sizes, types, and numbers of equipment to be used; and (3) a time schedule. The permittee shall agree to a reasonable adjustment of schedule or alignment of canals and spoil in order to minimize the disturbance of water flows, critical plant assemblages, unique natural areas, important wildlife areas, or other desirable ecological features. All activities are confined to those areas as finalized on the attached maps.

S-16P The right-of-way granted shall be for the specific use described and may not be construed to include the further right to authorize any other use within the right-of-way unless approved in writing by the land manager.

Spoil placement.

S-27 All spoil shall be contained within the presently existing spoil area.

Surface damage.

S-11P In order to minimize habitat and resource loss, work crews and support vehicles/equipment are confined to the immediate construction site at all times unless otherwise approved in writing by the land manager.

S-12P Permittee shall report in writing to the land manager unanticipated damages to waterflow regimes, vegetation, wildlife, and all other physical, biological, or chemical elements of the refuge. At the option of, and in a manner determined by, the land manager, the damages will be repaired to his satisfaction immediately following completion of the canal. All costs are to be borne by the permittee.

S-14P Permittee shall undertake measures, to the extent and in a manner determined by the land manager, to conserve resources and minimize turbidity/erosion problems.

Effects on wildlife.

S-13P Permittee shall not harass or disturb any wildlife during any phase of the construction. Should it appear necessary to alter a nest, bed, den, or home, all operations shall be halted until the land manager grants approval or provides for an acceptable alternative.

Map of operations.

S-15P Following the completion of the canal and wellsite location, the permittee shall provide an accurate map indicating locations and types of all land surface alterations that were realized during the operations.

Wellsite Preparation and Operation for Leveed Marsh-Floor Locations

General.

S-29M Prior to initiating any field work, permittee shall meet with the land manager and provide specifications of the operation including, but not limited to: (1) maps showing locations of wellsite and levees, routes of access and travel, and equipment/materials storage areas; (2) information concerning sizes, types,

and numbers of equipment to be used; and (3) a time schedule. The permittee shall agree to a reasonable adjustment of schedule or alignment of drilling site and levees in order to minimize the disturbance of water flows, critical plant assemblages, unique natural areas, important wildlife areas, or other desirable ecological features. All activities are confined to those areas as finalized on the attached maps.

S-23P Permittee will have fire suppression and controlling equipment approved by the land manager on the site at all times. At signs of fire, permittee will expend manpower to extinguish blaze.

S-25P The right-of-way granted shall be for the specific use described and may not be construed to include the further right to authorize any other use within the right-of-way unless approved in writing by the land manager.

Location.

S-28 Physical occupancy of the area must be kept to the minimum space compatible with the conduct of efficient mineral operations.

S-29 The final location of the drilling site will be coordinated with the refuge manager so as not to alter or damage any existing pond or small water body.

Spoil placement.

S-30 All spoil shall be contained within the presently existing spoil area.

Mud and waste management.

S-18P No oil, gasoline, or other materials capable of causing pollution will be discharged into refuge waters or lands.

S-19P During operations the permittee shall hold all equipment, materials, debris, and trash in a fashion and location acceptable to land manager; such items shall be removed from the refuge immediately upon project completion.

Surface damage.

S-17P In order to minimize habitat and resource loss, work crews and support vehicles/equipment are confined to the immediate construction site at all times unless otherwise approved in writing by the land manager.

S-20P Permittee shall report in writing to the land manager unanticipated damages to waterflow regimes, vegetation, wildlife, and all other physical, biological, or chemical elements of the refuge. At the option of, and in a manner determined by, the land manager, the damages will be repaired to his satisfication immediately following completion of the wellsite. All costs are to be borne by the permittee.

S-22P Permittee shall undertake measures, to the extent and in a manner determined by the land manager, to conserve resources and minimize turbidity/erosion problems.

Effects on wildlife.

S-21P Permittee shall not harass or disturb any wildlife during any phase of the activities. Should it appear necessary to alter a nest, bed, den, or home, all operations shall be halted until the land manager grants approval or provides for an acceptable alternative.

Map of operations.

S-24P Following the completion of the wellsite construction, the permittee shall provide an accurate map indicating locations and types of all land surface alterations that were realized during the operations.

Installation and Maintenance of Lines

Facility planning.

S-26P Prior to initiating any field work, permittee shall meet with the land manager and provide specifications of the operation including, but not limited to: (1) maps showing locations of pipeline alignment, access route, and equipment storage areas; (2) information concerning sizes, types, and numbers of equipment to be used; and (3) a time schedule. The permittee shall

agree to a reasonable alignment adjustment in order to minimize the disturbance of water flows, critical plant assemblages, unique natural areas, important wildlife areas, or other desirable ecological features. All activities shall be confined to those areas as finalized on the attached maps.

S-30P Upon termination of the operation, the area shall be restored to as nearly as possible the original condition to the satisfaction of the land manager. Restoration may include, but is not limited to, reestablishing initial site contours and revegetating the site.

S-47P Upon completion of the construction, the permittee shall furnish the land manager an accurate survey of the pipeline "as built," including typical cross sectioning.

General agreements.

S-41P Permittee shall conduct all operations so as to prevent the escape of gases, liquids, or other deleterious substances from established pipelines or other facilities onto or into lands or waters of the refuge.

S-42P The surface owner retains the right to use the right-of-way for the planting of wildlife food and cover crops, provided the same shall not endanger the pipeline.

S-43P The permittee is responsible for correcting any problems identified by the surface owner which result from the pipeline or its construction. In addition the permittee shall take immediate remedial action in emergency situations.

S-45P In the control of vegetation within the rights-of-way, no herbicide or pesticides shall be used without first obtaining permission in writing from the land manager as to type or kind of chemical to be used and the rate, method, and time of application.

S-48P Permittee shall take all reasonable precautions to prevent the escape of fire and to suppress same should it occur.

S-52P Permittee is authorized to patrol and inspect the line with prior clearance of the land manager.

Construction right-of-way.

S-36P Construction operations shall be limited to a (desired width) - meter right-of-way, being (desired width) meters on each side of the centerline. (Necessary widths range from 1 to 100 meters and depend on line type, land-use objectives, and other site-specific variables.)

Vehicle access and movement.

S-31P Ingress and egress to and from the pipeline during construction shall be limited to the minimum number of vehicles necessary and to the areas of right-of-way for the pipeline, the permit area, and existing roads and waterways unless otherwise authorized by the land manager or this permit.

S-32P All equipment movement along the construction right-of-way shall be kept to a minimum during construction. Marsh buggies shall not make collection trips along the line to pick up personnel. On completion of a day's work, this equipment shall go directly to canal bank and park against the toe of the levee (not on top of the levee). Boats shall collect crews along the canal banks for trips out of the marsh.

Spoil placement.

S-37P The spoil material from the canal shall not be placed closer than (desired distance) meters from the banks of navigable waterways crossed, nor disposed of where it will enter navigation or drainage channels.

S-38P The banks of the levees created by spoil shall have gaps cut in them at least (desired width) meters wide and at not over (desired depth) meters from the canal is placed on both sides of the canal, the gaps to be cut in the levees shall be directly opposite each other. Gaps shall be provided for all natural drainages. Spoil shall be placed within the construction right-of-way as directed by the land manager.

Line depth below surface.

S-31 The top of the pipeline shall be placed not less than 0.6 m (2 ft) below the present surface.

S-50P The top of the pipeline shall be placed not less than (desired depth) meters below the surface of existing canals and waterways, for a distance of (desired distance) meters on each side of said canals and waterways.

Line placement.

S-28P Unless site conditions are shown to be totally unsuitable, the "push-ditch" or "shove" method of pipeline installation shall be utilized.

S-29P To the greatest extent possible, installation of all flowlines, supply lines, and utility lines shall be confined to existing leveed roads or dredged canal rights-of-way.

S-34P If flowlines must be placed through marsh, they should be laid directly on the mash surface and allowed to sink and settle naturally. They should not be buried since vehicle movement as well as digging and backfilling would result in further channelization and marsh alterations.

Backfilling.

S-40P All pipeline ditches shall be completely backfilled with all available spoil removed during excavation operations such that final surface contours approach original site conditions as nearly as possible. In the event additional fill material is required to compensate for settlement, it shall be removed from scattered deep holes within the easement, rather than from continual surface cuts.

Plugs along banks for pipeline ditches.

S-33P Earthen marsh plugs shall be constructed at intervals of (desired length) meters along the pipeline and at the point of intersection of the pipeline and major watercourses such as lakes, ponds, bayous, canals, ditches, and tidal creeks. These plugs shall extend a minimum of (desired length) meters on each side of the pipeline ditch and shall be a minimum of (desired width) meters wide and (desired height) meters high. They shall be maintained by the permittee to the land manager's specifications.

Maintenance.

S-51P Future maintenance of backfilled areas shall remain the responsibility of the permittee.

Placement and Operation of Production Facilities

Facility planning.

S-54P Prior to initiating any field work, permittee shall meet with the land manager and provide specifications of the operation including, but not limited to: (1) maps showing location of production facilities, access route, and equipment storage areas; (2) information concerning sizes, types, and numbers of equipment to be used; and (3) a time schedule. The permittee shall agree to a reasonable facility siting adjustment in order to minimize the disturbance of water flows, critical plant assemblages, unique natural areas, important wildlife areas, or other desirable ecological features. All activities shall be confined to those areas as finalized on the attached maps.

S-61P The permittee shall provide the land manager with a design which restricts the complex size to the minimum area required to conduct processing operations, store equipment and supplies, and contain waste materials. Production facility easement shall not exceed (desired area) square meters unless otherwise authorized by the land manager.

Restoration.

S-62P Upon completion of any oil and gas activity which no longer requires the use of an existing processing site, the permittee shall, unless otherwise authorized by the land manager, remove the pad, levees, burn pits, etc. and restore the entire easement to its original preconstruction condition as specified by the land manager. Restoration measures shall include, but are not limited to, reestablishing inital site contours and site revegetation.

S-63P Following completion of site restoration, the land manager may conduct an on-site inspection to verify that restoration or mitigation of any environmental damages has been satisfactorily completed and may, at that time, require additional conservation measures necessary to satisfy permit requirements.

General.

S-66P All treatment and processing equipment used by the permittee that could cause oil, gas, or field brine pollution or contamination, such as pumps, valves, hoses, hose connections, tanks, and pipelines, must be maintained and repaired to prevent leakage or waste. Any inevitable waste in proximity to the source must be confined to prevent escape that might otherwise occur as a result of rains, high water, or natural drainage.

S-68P Utilization and disposal of used or waste solid materials resulting from production processes or treatment equipment, such as oil-contaminated sand, brine sediments, chemical precipitates, or other filtrable solids, as fill material is prohibited on the refuge.

S-69P The permittee shall take such measures to prevent soil erosion from starting within the easement as the land manger may prescribe and shall take such other conservation measures, including revegetation, that may be requested by the land manager.

S-72P Permittee will have fire suppression and controlling equipment approved by the land manager on the site at all times. At signs of fire, permittee will expend manpower to extinguish blaze.

Map of operations.

S-70P Following the completion of the treatment complex construction, the permittee shall provide an accurate map indicating locations and types of all land surface alterations effected during the operations.

Patrolling and inspecting pipelines.

S-64P The permittee is authorized to patrol and inspect the production line with prior authorization and clearance of the land manager for each occurrence.

Maintenance dredging of terminal.

S-55P The land manager will be notified in advance of actual commencement of maintenance dredging and spoiling operations.

S-56P All spoil will be deposited and contained within a spoil retention levee.

S-57P The spoil will be spread and leveled to the satisfaction of the land manager.

Maintenance dredging in canals.

S-58P In shallow bays and open waters, spoil shall be deposited so as not to reduce water depths by more than (desired depth) cm. In areas where this is not practicable, spoil shall be deposited on alternate sides of access channels every (desired interval) meters with (desired wedth)-meter gaps left between the spoil deposits.

S-59P No natural or man-made waterways presently open shall be blocked by spoil deposition resulting from maintenance dredging.

Burning pit.

S-71P The land manager shall approve of the burning pit location prior to construction. The pit shall be so constructed and maintained as to prevent the escape of waste materials into the marsh.

Spills and Cleanup

Contingency plan.

S-73P The permittee shall file an "accidental spill" contingency plan with the land manager prior to initiating well-drilling pipeline, or production facility operations. The plan shall outline, but is not limited to, proposed procedures to report, contain, and clean up all types of hydrocarbon/brine spills in the salt marsh, as well as proposed reclamation measures for site restoration.

General.

S-74P All spills or accidental discharges of oil, field brine, or other petrochemical substances of greater than (quantity) liters shall be reported to the land manager within 24 hr.

S-75P Containment and cleanup of an accidental spill shall be conducted as soon as possible following its discovery, unless otherwise specified by the land manager.

Methods and techniques.

S-76P In the control of spilled oil or oil-field substances, no dispersants, emulsifiers, or other chemical agents shall be used without permission in writing from the land manager as to the type or kind of chemical to be used and the rate, time, and method of application.

S-77P In the event of an accidental spill or discharge of oil or any other petrochemical substance, the permittee shall take such measures as may be necessary or requested by the land manager to disperse and prevent waterfowl, wading birds, and shorebirds from using or frequenting oil-contaminated marsh areas.

S-78P Unless otherwise authorized by the land manager, the permittee shall conduct all cleanup operations occurring in shallow semi-aquatic areas or on firm marsh substrates by boat and/or by hand. The use of marsh buggies, draglines, and other similar heavy equipment in such areas is prohibited.

S-79P The permittee shall be permitted to immediately burn any oil accidentally escaping anywhere in the field. Permittee will not be held responsible for any damage to refuge marshland vegetation from such burning.

S-80P The permittee shall take all reasonable percautions necessary during the spill containment and cleanup phases to minimize disturbances to the marsh surface, existing drainage patterns, and marsh vegetation.

S-81P The permittee shall take all necessary percautions to avoid damaging the root systems of oil-contaminated marsh flora. If such vegetation is mechanically removed, only the aerial portions should be taken.

Restoration.

S-82P Following the cleanup phase of a brine or oil spill, the permittee shall, unless otherwise authorized by the land manager, restore the affected area to its original preaccident or better

condition as specified by the land manager. Restoration measures shall include, but are not restricted to, reestablishment of former drainage patterns and revegetation with native flora.

S-83P All natural bayous are to be swept clean of bottom ruts resulting from equipment crossing during construction.

Site Shutdown and Restoration

Shutdown.

S-84P Should a lease prove not to contain commercial reserves, the boards will be removed and the road base backfilled to return the marsh site to its original state and surface contours.

S-85P Whenever a facility is partially shut down, active areas such as the road and landing will be reduced and improved. The inactive fringe areas shall be restored as soon as possible.

S-86P In the event all or a portion of the facilities are removed from the refuge as the result of the termination of operations or for other reasons, the permittee shall completely remove all spoil and ring levees, completely backfill or plug all canals and ditches, and provide regular gaps in all levees not removed, as specified by the land manager.

Restoration.

S-87P Prior to initiating any extensive restoration field work, the permittee shall meet with the land manager and provide specifications of the operation including, but not limited to: (1) maps showing features to be restored, points of alterations, and access routes; (2) information concerning sizes, types, and numbers of equipment to be used; and (3) a time schedule. The permittee shall agree to reasonable modifications in order to minimize the disturbance of desirable water flows, wildlife concentrations, or other desirable ecological features. All activities shall be confined to those areas as finalized on the attached maps.

S-83P All natural bayous are to be swept clean of bottom ruts resulting from equipment crossing during construction.

S-88P In order to ensure the environmental protection of the permit area, the permittee shall restore, revegetate, and curtail the erosion of the surface of the land as directed by the land manager.

S-89P As specified by the land manager, restoration procedures may require the construction of nesting platforms, denning sites, or other wildlife habitat improvements to replace natural features lost or altered by permittee activities.

S-90P Following completion of restoration procedures, the land manager may conduct an on-site inspection to verify that restoration or mitigation of any environmental damages has been satisfactorily completed and may, at that time, require additional conservation measures necessary to satisfy permit requirments.

BRACKISH MARSH

Seismic Preexploration

General.

B-1M Prior to initiating any field work, permittee shall meet with the land manager and provide specifications of the operation including, but not limited to: (1) maps showing locations of shot lines and holes, routes of access and travel, and equipment storage areas; (2) information concerning sizes, types, and numbers of equipment to be used; and (3) a time schedule. The permittee shall agree to a reasonable adjustment of schedule of alignment of shot lines in order to minimize the disturbance of water flows, critical plant assemblages, unique natural areas, important wildlife areas, or other desirable ecological features. All activities are confined to those areas as finalized on the attached maps.

B-3M Permittee will have fire suppression and controlling equipment approved by the land manager on the site at all times. At signs of fire permittee will expend manpower to extinguish blaze.

Timing of seismic activities.

B-4 All work shall be conducted during daylight hours.

B-5 (Operations no later than) October 15. (Exact date will very with species of concern and with location of refuge.)

Surface disturbance.

B-10 Operations must not disturb any improvement, structure, boat channel, waterway, or land corner monument.

Effects on wildlife.

B-14 Killing or harassing of wildlife is prohibited. It is also illegal to molest or destroy the homes or dens of any wildlife.

Vehicle movement.

B-15 The permittee will be allowed to make one traverse of each survey line by marsh buggy; all other transportation of men and materials will be by means of helicopter only.

B-16 Marsh buggies must not run over the same trail twice.

B-17 Buggy operators should stick to the designated work areas and not take off cross-country on exploring trips.

B-18 Consolidate trips - use one marsh buggy to bring back crews if possible.

B-19 Buggies should be left parked on the toe of the levee impoundments, not parked on top of the levee.

B-20 Oil of buggies may be changed in the field but old oil must be put in containers and brought out and not thrown into the marsh.

Retrieval of equipment.

B-28 At conclusion of the survey, all pipe will be pulled from the shotholes and the latter plugged in a manner satisfactory to the refuge manager.

B-31 The permittee agrees to leave cane poles in place (at shot hole locations).

Cleanup and restoration.

B-35M During operations the permittee shall hold all equipment, materials, debris, and trash in a fashion and location acceptable to the land manager; such items shall be removed from the refuge immediately upon project completion.

B-32M Permittee shall report in writing to the land manager unanticipated damages to waterflow regimes, vegetation, wildlife, and all other physical, biological, or chemical elements of the refuge. At the option of, and in a manner determined by, the land manager, the damages will be repaired to his satisfaction immediately following completion of the survey. All costs are to be borne by the permittee.

Shot hole map.

B-36 The refuge manager will be furnished with an accurate map showing location of all shotholes.

Gravity Preexploration

General.

B-37M Prior to initiating any field work, permittee shall meet with the land manager and provide specifications of the operation including, but not limited to: (1) maps showing locations of stations, routes of access and travel, and equipment storage areas; (2) information concerning sizes, types, and numbers of equipment to be used; and (3) a time schedule. The permittee shall agree to a reasonable adjustment of schedule, stations, or support equipment in order to minimize the disturbance of water flows, critical plant assemblages, unique natural areas, important wildlife areas, or other desirable ecological features. All activities are confined to those areas as finalized on the attached maps.

Timing of activities.

B-38 Must have survey completed by October 15. (Exact date will vary with species of concern and with location of refuge.)

Effects on wildlife.

B-39M Permittee shall not harass or disturb any wildlife during any phase of the gravity survey. Should it appear necessary to alter a nest, bed, den, or home, all operations shall be halted until the land manager grants approval or provides for an acceptable alternative.

Vehicle movement.

B-40 Permittee will be required to transport both men and materials throughout the survey by means of helicopter only. Surface vehicles will not be permitted within the refuge area.

B-1P A maximum of one surface vehicle may be used during the survey. The vehicle must consolidate all passages across the marsh and must not run over the same trail twice.

Cleanup and restoration.

B-41M Permittee shall report in writing to the land manager unanticipated damages to waterflow regimes, vegetation, wildlife, and all other physical, biological, or chemical elements of the refuge. At the option of, and in a manner determined by, the land manager, the damages will be repaired to his satisfaction immediately following completion of the survey. All costs are to be borne by the permittee.

Site Access by Leveed Road

General.

B-2P Prior to initiating any field work, permittee shall meet with the land manager and provide specifications of the operation including, but not limited to: (1) maps showing locations of borrow pits and levees, routes of access and travel, and equipment storage areas; (2) information concerning sizes, types, and numbers of equipment to be used; and (3) a time schedule. The permittee shall agree to a reasonable adjustment of schedule of alignment of borrow pits and levees in order to minimize the disturbance of water flows, critical plant assemblages, unique natural areas, important wildlife areas, or other desirable ecological features. All activities are confined to those areas as finalized on the attached maps.

Vehicle movement and right-of-way use.

B-42 To clear and keep clear the lands within the right-of-way to the extent and in the manner directed by the refuge manager.

B-43 To take such soil and resource conservation and protection measures, including weed control on the land covered by the right-of-way, as the refuge manager may request.

B-44 All work shall be done with a minimum production of turbidity in marsh waters.

B-46 That right-of-way shall be for the specific use described and may not be construed to include the further right to authorize any other use within the right-of-way unless approved in writing by the regional director.

B-47 All road building equipment will be confined to the immediate area of construction.

Leveling.

B-48 Grade and level only as absolutely needed, taking advantage of the abundant salt grass for support. Only if needed, build an earthen levee or pad, drillsite or roadway.

Roadway specifications.

B-49 Three road level bridges for marsh drainage and water movement are required.

B-50 Culverts will be installed along access road to allow marsh drainage where necessary.

B-52 A board road requires a minimum 6-m (20-ft) and preferably 7.5-m (25-ft) top.

B-55 Require a minimum 10.6-m (35-ft) berm from levee to borrow pit.

B-56 The distance between the edge of the road on the levee and the edge of the canal should be 15.2 m (50 ft).

Borrow pits.

B-57 Borrow pits must have a plug left every 0.4 km (0.25 mi).

B-58 Borrow pits to be staggered from side to side along the length of the leveed road.

B-59 Borrow pits to be 0.4 km (0.25 mi) in length at maximum.

B-60 Borrow pit to begin not less than 30 m (100 ft) from edge of road and drainage canal.

Effects on wildlife.

B-45 All activity during the October 15 through March 31 period will be coordinated with refuge manager, as this is the season of greatest use by migrating waterfowl. (Dates will vary.)

B-4P Permittee shall not harass or disturb any wildlife during any phase of the roadbuilding. Should it appear necessary to alter a nest, bed, den, or home, all operations shall be halted until the land manager grants approval or provides an acceptable alternative.

Surface damages.

B-3P Permittee shall report in writing to the land manager unanticipated damages to waterflow regimes, vegetation, wildlife, and all other physical, biological, or chemical elements of the refuge. At the option of, and in a manner determined by, the land manager, the damages will be repaired to his satisfaction immediately following completion of the roadway. All costs are to be borne by the permittee.

Map of operations.

B-5P Following the completion of the roadway, the permittee shall provide an accurate map indicating locations and types of all land surface alterations that were realized during the operations.

Site Access by Canal and Wellsite Dredging

General.

B-6P Prior to initiating any field work, permittee shall meet with the land manager and provide specifications of the operation including, but not limited to: (1) maps showing locations of canals and spoil deposits, routes of access and travel, and equipment storage areas; (2) information concerning sizes, types, and numbers of equipment to be used; and (3) a time schedule. The permittee shall agree to a reasonable adjustment of schedule or alignment of canals and spoil in order to minimize the disturbance of water flows, critical plant assemblages, unique natural areas, important wildlife areas, or other desirable ecological features. All activities are confined to those areas as finalized on the attached maps.

B-12P The right-of-way granted shall be for the specific use described and may not be construed to include the further right to authorize any other use within the right-of-way unless approved in writing by the land manager.

Combination canal-overland access.

B-61 Access to the area will be provided by a dock with deep water access to the intracoastal waterway and overland 'board road' access to the drillsite.

Spoil placement.

B-62 All spoils taken from canal to be placed in a continuous row along the north bank. (To build up elevation)

B-63 Proposed spoils should have no openings into the marsh, to protect the adjacent marsh areas from possible pollution. (Continuous closed levee around the wellsite).

B-64 The top surface of spoils are to be made level to provide a possible site for the planting of trees.

Surface damage.

B-7P In order to minimize habitat and resource loss, work crews and support vehicles/equipment are confined to the immediate construction site at all times unless otherwise approved in writing by the land manager.

B-8P Permittee shall report in writing to the land manager unanticipated damages to waterflow regimes, vegetation, wildlife, and all other physical, biological, or chemical elements of the refuge. At the option of, and in a manner determined by, the land manager, the damages will be repaired to his satisfication immediately following completion of the canal. All costs are to be borne by the permittee.

B-10P Permittee shall undertake measures, to the extent and in a manner determined by the land manager, to conserve resources and minimize turbidity/erosion problems.

Effects on wildlife.

B-9P Permittee shall not harass or disturb any wildlife during any phase of the construction. Should it appear necessary to alter a nest, bed, den, or home, all operations shall be halted until the land manager grants approval or provides for an acceptable alternative.

Map of operations.

B-11P Following the completion of the canal and wellsite location, the permittee shall provide an accurate map indicating locations and types of all land surface alterations that were realized during the operations.

Wellsite Preparation and Operation for Leveed Marsh-Floor Locations

General.

B-13P Prior to initiating any field work, permittee shall meet with the land manager and provide specifications of the operation including, but not limited to: (1) maps showing locations of wellsite and levees, routes of access and travel, and equipment/materials storage areas; (2) information concerning sizes, types,

and numbers of equipment to be used; and (3) a time schedule. The permittee shall agree to a reasonable adjustment of schedule or alignment of drilling site and levees in order to minimize the disturbances of water flows, critical plant assemblages, unique natural areas, important wildlife areas, or other desirable ecological features. All activities are confined to those areas as finalized on the attached maps.

B-18P Permittee will have fire suppression and controlling equipment approved by the land manager on the site at all times. At signs of fire, permittee will expend manpower to extinguish blaze.

B-20P The right-of-way granted shall be for the specific use described and may not be construed to include the further right to authorize any other use within the right-of-way unless approved in writing by the land manager.

Location.

B-66 Permittee will construct a 76 by 91-m (250 by 300-ft) boarded location pad with a 1.2-m (4-ft) high ring levee surrounding the entire turn around.

B-67 Any terrain more than 60 m (200 ft), except roadway and landing, in any direction from the well stake shall not be effected by the drilling operation.

Mud and waste management.

B-69 No oil, gasoline, or other materials capable of causing pollution will be discharged into refuge lands.

B-70 At the drillsite a shallow earthen pit will be dug to hold excess drilling mud, with all other fluids being contained in steel tanks.

B-71M During operations the permittee shall hold all equipment, materials, debris, and trash in a fashion and location acceptable to the land manager; such items shall be removed from the refuge immediately upon project completion.

Surface damage.

B-14P In order to minimize habitat and resource loss, work crews and support vehicles/equipment are confined to the immediate construction site at all times unless otherwise approved in writing by the land manager.

B-15P Permittee shall report in writing to the land manager unanticipated damages to waterflow regimes, vegetation, wildlife, and all other physical, biological, or chemical elements of the refuge. At the option of, and in a manner determined by, the land manager, the damages will be repaired to his satisfaction immediately following completion of the wellsite. All costs are to be borne by the permittee.

B-17P Permittee shall undertake measures, to the extent and in a manner determined by the land manager, to conserve resources and minimize turbidity/erosion problems.

Effects on wildlife.

B-16P Permittee shall not harass or disturb any wildlife during any phase of the activities. Should it appear necessary to alter a nest, bed, den, or home, all operations shall be halted until the land manager grants approval or provides for an acceptable alternative.

Map of operations.

B-19P Following the completion of the wellsite construction, the permittee shall provide an accurate map indicating locations and types of all land surface alterations that were realized during the operations.

Installation and Maintenance of Lines

Facility planning.

B-21P Prior to initiating any field work, permittee shall meet with the land manager and provide specifications of the operation including, but not limited to: (1) maps showing locations of pipeline alignment, access routes, and equipment storage areas; (2) information concerning sizes, types, and numbers of equipment to be used; and (3) a time schedule. The permittee shall agree to a reasonable alignment adjustment in order to minimize the disturbance of water flows, critical plant assemblages, unique

natural areas, important wildlife areas, or other desirable ecological features. All activities shall be confined to those areas as finalized on the attached maps.

B-73 Construction activities shall be limited to the period between the dates of March 15 and October 15. (Exact dates will vary with species of concern and with location of refuge.)

B-76 Upon completion of the pipeline the grantee shall furnish the regional director with an accurate survey of the pipeline 'as built', including typical cross-sectioning.

B-22P To the greatest extent possible, new gas and oil pipelines will use existing pipeline easements to route the facility across refuge lands.

B-23P Unless site conditions are shown to be totally unsuitable, the "push-ditch" or "shove" method of pipeline installation shall be utilized.

General agreements.

B-77 Grantee shall conduct all its operations so as to prevent the escape of gases, liquids, or other deleterious substances from any of its pipelines or other facilities onto or into lands or waters of the refuge.

B-80 The USFWS retains the right to use the right-of-way for the planting of wildlife food and cover crops, provided the same shall not endanger the pipeline.

B-79M In the control of vegetation within the rights-of-way no herbicide or pesticides shall be used without first obtaining permission in writing from the land manager as to type or kind of chemical to be used and the rate, method, and time of application.

B-27P Upon termination of the operation, the area shall be restored to as nearly as possible the original condition to the satisfaction of the land manager. Restoration may include, but is not limited to, reestablishing initial site contours and revegetating the site.

B-28P Permittee will have fire suppression and controlling equipment approved by the land manager on the site at all times. At signs of fire, permittee will expend manpower to extinguish blaze.

Construction right-of-way.

B-81 The right-of-way shall not exceed the width of 12 m (40 ft), being 6 m (20 ft) on each side of the centerline. (Necessary widths range from 13 to 49 m (40 to 150 ft) and depend on line type, land-use objectives, and other site-specific variables.)

Vehicle access and movement.

B-86 Ingress and egress to and from the pipeline during construction shall be limited to the minimum number of vehicles necessary and to the areas of the pipeline right-of-way, the permit area and existing roads and waterways, unless otherwise authorized by the refuge manager or this permit.

B-87 All equipment movement along the construction right-of-way shall be kept to a minimum. Marsh buggies shall not make collection trips along the line to pick up personnel. On completion of a day's work, this equipment shall go directly to the canal bank and be parked against the toe of the levee not on top of the levee. Boats shall collect crews along the canal bank for trips out of the marsh.

Spoil placement.

B-88M Spoil levees created as a result of canal dredging shall have gaps cut in them at least (desired width) meters wide with intervals of not less than (desired distance) meters between gaps. If spoil from the canal is placed on both sides of the canal, the gaps to be cut in the levees shall be directly opposite each other. Spoil from the dredging of a canal shall be placed within the construction right-of-way as directed by the land manager.

B-89 None of the waterways bisected by pipeline will be left blocked when construction is completed.

B-26P In the case of flotation canals, the spoil materials from the canal shall not be placed closer than (desired distance) meters from the banks of navigable waterways crossed nor disposed of where it will enter ponds, lakes, canals, or other watercourses.

Line depth below surface.

B-91 The top of the pipeline shall be placed not less than 0.9 m (3 ft) below the present surface of the land.

B-92 The top of the pipeline shall be placed not less than 2.4 m 8 ft) below the bottom of existing canals and waterways for a distance of 15.2 m (50 ft) on each side of said canals and waterways.

Line placement.

B-24P To the greatest extent possible, installation of all flowlines, supply lines, and utility lines shall be confined to existing leveed roads or dredged canal rights-of-way.

B-25P If flowlines must be placed through marsh, they should be laid directly on the marsh surface and allowed to sink and settle naturally. They should not be buried since vehicle movement as well as digging and backfilling would result in further channelization and marsh alterations.

Backfilling.

B-97M All pipeline ditches shall be completely backfilled with all available spoil removed during excavation operations, such that final surface contours approach original site conditions as nearly as possible. In the event additional fill material is required to compensate for settlement, it shall be removed from scattered deep holes within the easement, rather than from continual surface cuts.

Plugs along banks for pipeline ditches.

B-100 Where the right-of-way intercepts existing tidal drains (guts, ditches, creeks, etc.) that in the opinion of the refuge manager present a significant potential for causing erosion, the pipeline ditches shall be backfilled to an elevation of 0.6 m (2 ft) above the marsh surface for a distance of 6.2 m (20 ft) on either side of the intercepted drain.

B-101 All canal crossings by pipelines are to be adequately protected by bulkheaded construction. (Wakefield piling bulkheads are usually required.)

B-103 To protect lake shore (pipeline goes from lake bottom to marshland) at the point of entrance, a sacked concrete rip rap laid on an 8-inch (20-cm) shell fill will be needed. It will extend 3 m (10 ft) onto the land and at least 4.6 m (15 ft) into the water, being centered over the pipeline ditch it will extend 4 m (13 ft) out on each side along the shore line Then at a distance of 7.6 m (25 ft) from the bank a 7.6-m (25-ft) length of 3.7 m (12-ft) creosoted wood wakefield piling would be driven across the pipeline ditch.

Flotation canal plugs.

B-104M Earthen marsh plugs shall be constructed at intervals of (desired length) meters along the pipeline and at the point of intersection of the pipeline and major watercourses such as lakes, ponds, bayous, canals, ditches, and tidal creeks. These plugs shall extend a minimum of (desired length) meters on each side of the pipeline ditch and shall be a minimum of (desired width) meters wide and (desired height) meters high. The plugs shall be maintained by the permittee to the land manager's specifications.

B-106 Applicant will install an earthen plug in the (pipeline) canal by backfilling the canal for a distance of 18 m (60 ft) from the refuge boundary to be maintained by the applicant to the satisfaction of the refuge manager.

Cattle walks.

B-107 Cattle cross walks will be needed to permit the movement of cattle across the pipeline.

Cathode protection.

B-108 The cable and the tops of the anodes shall be buried a minimum of 1.5 m (5 ft) below the surface of the ground.

Placement and Operation of Production Facilities

Facility planning.

B-31P Prior to commencement of any field work, permittee shall meet with the land manager and provide specifications of the operation including, but not limited to: (1) maps showing facility

locations, pipeline alignment, access routes, information concerning sizes, types, and numbers of equipment to be used; and (3) a time schedule. The permittee shall agree to a reasonable facility siting adjustment in order to minimize the disturbance of water flows, critical plant assemblages, unique natural areas, important wildlife areas, or other desirable ecological features. All activities shall be confined to those areas as finalized on the attached maps.

B-38P All vehicular traffic and construction activities shall be strictly confined within the easement boundaries of the processing complex location. Vegetation damage, equipment and supply storage, and removal of fill materials from outside these boundaries are prohibited, unless otherwise authorized in writing by the land manager.

B-39P The permittee shall provide the land manager with design which restricts the complex size to the minimum area required to conduct processing operations, store equipment and supplies, and contain waste materials. Pad easement shall not exceed (desired area) square meters, unless otherwise authorized by the land manager.

Restoration.

B-40P Upon completion of any oil and gas activity which no longer requires the use of an existing processing site, the permittee shall, unless otherwise authorized by the land manager, remove the production facilities, levees, burn pits, etc. and restore the entire easement to its original preconstruction condition as specified by the land manager. Restoration measures shall include, but are not limited to, reestablishing initial site contours and site revegetation.

B-41P Following completion of site restoration, the land manager may conduct an on-site inspection to verify that restoration or mitigation of any environmental damages has been satisfactorily completed and may, at that time, require additional conservation measures necessary to satisfy permit requirements.

General.

B-42P All treatment and processing equipment used by the permittee that could cause oil, gas, or field brine pollution or contamination such as pumps, valves, hoses, hose connections, tanks, and pipelines, must be maintained and repaired so as to prevent leakage or waste. Any inevitable waste in proximity to the

source must be confined so as to prevent escape that might otherwise occur as a result of rains, high water, or natural drainage.

B-44P Utilization and disposal of used or waste solid materials resulting from production processes or treatment equipment, such as oil-contaminated sand, brine sediments, chemical precipitates, or other filtrable solids, as fill material is prohibited on the refuge.

B-45P The permittee shall take such measures to prevent soil erosion from starting within the easement as the land manager may prescribe and shall take such other conservation measures, including revegetation, that may be requested by the land manager.

Map of operations.

B-46P Following the completion of the treatment complex construction, the permittee shall provide an accurate map indicating locations and types of all land surface alterations affected during the operation.

Right-of-way.

B-110 The right-of-way shall be limited to 7.6 m (25 Ft) being 3.8 m (12.5 ft) on either side of the centerline. (Necessary widths range from 1 to 100 m and depend on equipment type, land-use objectives, and other sitespecific variables.)

B-112 After construction is completed, the right-of-way shall be limited to the width of the pipe.

Patrolling and inspecting pipelines.

B-113 No repairs to the pipeline will be made during periods of waterfowl concentrations on the area from November 1 to March 15, with the exception of emergency repairs as may be authorized in writing by the refuge manager.

Maintenance dredging at terminal.

B-32P The land manager will be notified in advance of dredging and spoiling operations for placement or maintenance of production equipment.

B-33P All spoil will be deposited and contained within a spoil retention levee.

B-34P The spoil will be spread and leveled to the satisfaction of the land manager.

Maintenance dredging in canals.

B-35P In shallow bays and open waters, spoil shall be deposited so as not to reduce water depths by more than (desired depth) cm. In areas where this is not possible, spoil shall be deposited on alternate sides of access channels every (desired interval) meters with (desired width)-meter gaps left between the spoil deposits.

B-36P No natural or man-made waterways presently open shall be blocked by spoil deposition resulting from maintenance dredging.

Burning pit.

B-47P The land manager shall approve of the burning pit location prior to construction. The pit shall be so constructed and maintained as to prevent the escape of waste materials into the marsh.

Spills and Cleanup

Contingency plan.

B-48P The permittee shall file an "accidental spill" contingency plan with the land manager prior to initiating well-drilling, pipeline, or production facility operations. The plan shall outline, but is not limited to, proposed procedures to report, contain, and clean up all types of oil/brine spills in the brackish marsh, as well as proposed reclamation measures for site restoration.

General.

B-49P All spills or accidental discharges of oil, field brine, or other petrochemical substances of greater than (quantity) liters shall be reported to the land manager within 24 hr.

B-50P Containment and cleanup of an accidental spill shall be conducted as soon as possible following its discovery, unless otherwise specified by the land manager.

Methods and techniques.

B-51P In the control of spilled oil or oil-field substances, no dispersants, emulsifiers, or other chemical agents shall be used without permission in writing from the land manager as to the type or kind of chemical to be used and the rate, time, and method of application.

B-52P In the event of an accidental spill or discharge of oil or any other petrochemical substance, the permittee shall take such measures as may be necessary or requested by the land manager to disperse and pervent waterfowl, wading birds, and shorebirds from using oil-contaminated marsh areas.

B-54P The permittee shall be permitted to immediately burn any oil accidentally escaping anywhere in the field.

B-55P The permittee shall take all reasonable percautions necessary during the spill containment and cleanup phases to minimize disturbances to the marsh surface, existing drainage patterns, and marsh vegetation.

B-56P The permittee shall take all necessary percautions to avoid damaging the root systems of oil-contaminated marsh flora. If such vegetation is mechanically removed, only the aerial portions should be taken.

Restoration.

B-57P Following the cleanup phase of a brine or oil spill, the permittee shall, unless otherwise authorized by the land manager, restore the affected area to its original preaccident or better condition as specified by the land manager. Restoration measures shall include, but are not restricted to, reestablishment of former drainage patterns and revegetation with native flora.

Site Shutdown and Restoration

Shutdown.

B-125 Should the well be productive, the road and landing should be improved to a permanent status. The wellsite should be reduced in size before also being made permanent.

B-126M The land contours and surface drainage patterns will be returned to as near the original state as possible following the completion of drilling operations.

Restoration.

B-58P In the event all or a portion of the facilities are removed from the refuge as the result of the termination of operations or for other reasons, the permittee shall completely remove all spoil and ring levees, completely backfill or plug all canals and ditches, and provide regular gaps in all levees not removed, as specified by the land manager.

B-59P Prior to initiating any extensive restoration field work, the permittee shall meet with the land manager and provide specifications of the operation including, but not limited to: (1) maps showing features to be restored, points of alterations, and access routes; (2) information concerning sizes, types, and numbers of equipment to be used; and (3) a time schedule. The permittee shall agree to reasonable modifications in order to minimize the disturbance of desirable water flows, wildlife concentrations, or other desirable ecological features. All activities shall be confined to those areas as finalized on the attached maps.

B-60P As specified by the land manager, restoration procedures may require the construction of nesting platforms, denning sites, or other wildlife habitat improvements to replace natural features lost or altered by permittee activities.

B-130 All natural bayous are to be swept clean of bottom ruts resulting from equipment crossing the bayou during construction.

B-61P Following completion of restoration procedures, the land manager may conduct an on-site inspection to verify that restoration or mitigation of any environmental damages has been satisfactorily completed and may, at that time, require additional conservation measures necessary to satisfy permit requirements.

FRESH MARSH

Seismic preexploration

General.

F-1P Prior to initiating any field work, permittee shall meet with the land manager and provide specifications of the operation including, but not limited to: (1) maps showing locations of shot lines and holes, routes of access and travel, and equipment storage areas; (2) information concerning sizes, types, and numbers of equipment to be used; and (3) a time schedule. The permittee shall agree to a reasonable adjustment of schedule or alignment of shot lines in order to minimize the disturbance of water flows, critical plant assemblages, unique natural areas, important wildlife areas, or other desirable ecological features. All activities are confined to those areas as finalized on the attached maps.

F-3P Permittee will have fire suppression and controlling equipment approved by the land manager on the site at all times. At signs of fire, permittee will expend manpower to extinguish blaze.

Effects on wildlife.

F-1M Permittee shall not harass or disturb any wildlife during any phase of the gravity survey. Should it appear necessary to alter a nest, bed, den, or home, all operations shall be halted until the land manager grants approval or provides for an acceptable alternative.

Vehicle movement.

F-4 Marsh buggies must not run over the same trail twice.

F-5 Buggy operators should stick to the designated work areas and not take off cross-country on exploring trips.

F-6 Consolidate trips - use one marsh buggy to bring back crews if possible.

F-7 Buggies should be left parked on the toe of the levee, not parked on top of the levee.

Retrieval of equipment.

F-9M At the conclusion of the survey, all pipe will be pulled from shot holes and the latter plugged and marked in a manner satisfactory to the land manager.

Cleanup and restoration.

F-8M During operations the permittee shall hold all equipment, materials, debris, and trash in a fashion and location acceptable to the land manager; such items shall be removed from the refuge immediately upon project completion.

F-2P Permittee shall report in writing to the land manager unanticipated damages to waterflow regimes, vegetation, wildlife, and all other physical, biological, or chemical elements of the refuge. At the option of, and in a manner determined by, the land manager, the damages will be repaired to his satisfaction immediately following completion of the survey.

Shot hole map.

F-4P At the conclusion of the operations, the land manager will be furnished an accurate map showing location of all shot holes.

Gravity Preexploration

General.

F-10M Prior to commencement of any field work, permittee shall meet with the land manager and provide specifications of the operation including, but not limited to: (1) maps showing locations of stations, routes of access and travel, and equipment storage areas; (2) information concerning sizes, types, and numbers of equipment to be used; and (3) a time schedule. The permittee shall agree to a reasonable adjustment of schedule, stations, or support equipment in order to minimize the disturbance of water flows, critical plant assemblages, unique natural areas, important wildlife areas, or other desirable ecological features. All activities are confined to those areas as finalized on the attached maps.

Timing of activities.

F-11 Must have survey completed by October 15. (Date varies with species of concern and with location of refuge.)

Effects on wildlife.

F-12M Permittee shall not harass or disturb any wildlife during any phase of the gravity survey. Should it appear necessary to alter a nest, bed, den, or home, all operations shall be halted until the land manager grants approval or provides for an acceptable alternative.

Vehicle movement.

F-5P A maximum of one surface vehicle may be used during the survey. The vehicle must consolidate all passages across the marsh and must not run over the same trail twice.

Cleanup and restoration.

F-14M Permittee shall report in writing to the land manager unanticipated damages to water flow regimes, vegetation, wildlife, and all other physical, biological, or chemical elements of the refuge. At the option of, and in a manner determined by, the land manager, the damages will be repaired to his satisfaction immediately following completion of the survey. All costs are to be borne by the permittee.

Site Access by Leveed Road

General.

F-6P Prior to initiating any field work, permittee shall meet with the land manager and provide specifications of the operation including, but not limited to: (1) maps showing locations of borrow pits and levees, routes of access and travel, and equipment storage areas; (2) information concerning sizes, types, and numbers of equipment to be used; and (3) a time schedule. The permittee shall agree to a reasonable adjustment of schedule or alignment of borrow pits and levees in order to minimize the disturbance of water flows, critical plant assemblages, unique natural areas, important wildlife areas, or other desirable ecological features. All activities are confined to those areas as finalized on the attached maps.

Vehicle movement and right-of-way use.

F-9P All road-building equipment is confined to the immediate area of construction.

F-11P The permittee shall take soil and resource conservation and protection measures (including weed control), to the extent and in a manner directed by the land manager, on the land covered by the right-of-way.

F-14P The right-of-way granted shall be for the specific use described and may not be construed to include the further right to authorize any other use within the right-of-way unless approved in writing by the land manager.

Leveling.

F-8P Permittee shall grade and level an earthen levee only where absolutely necessary; boards shall be placed directly on marsh vegetation whenever possible. Bridges and culverts shall be installed, maintained, and replaced in a manner acceptable to and determined by the land manager.

Roadway specifications.

F-15 The settled dike should have minimum top elevation of 1.8 m (6 ft) MSL, 3 m (10 ft) top width, and 3:1 2:1 (side slopes). (Actual dimensions will vary with land-use objectives.)

Borrow pits.

F-7P Excavation must result in intermittent borrow pits (staggered or plugged) no longer than 0.4 km (0.25 mi) and separated by plugs described in the attached plans.

Effects on wildlife.

F-12P Permittee shall not harass or disturb any wildlife during any phase of the road building. Should it appear necessary to alter a nest, bed, den, or home, all operations shall be halted until the land manager grants approval or provides for an acceptable alternative.

Surface damage.

F-10P Permittee shall report in writing to the land manager unanticipated damages to waterflow regimes, vegetation, wildlife, and all other physical, biological, or chemical elements of the refuge. At the option of, and in a manner determined by, the land manager, the damages will be repaired to his satisfaction immediately following completion of the survey. All costs are to be borne by the permittee.

Map of operations.

F-13P Following the completion of the roadway, the permittee shall provide an accurate map indicating locations and types of all land surface alterations that were realized during the operations.

Site Access by Canal and Wellsite Dredging

General.

F-15P Prior to initiating any field work, permittee shall meet with the land manager and provide specifications of the operation including, but not limited to: (1) maps showing locations of canals and spoil deposits, routes of access and travel, and equipment storage areas; (2) information concerning sizes, types, and numbers of equipment to be used; and (3) a time schedule. The permittee shall agree to a reasonable adjustment of schedule of alignment of canals and spoil in order to minimize the disturbance of water flows, critical plant assemblages, unique natural areas, important wildlife areas, or other desirable ecological features. All activities are confined to those areas as finalized on the attached maps.

F-21P The right-of-way granted shall be for the specific used described and may not be construed to include the further right to authorize any other use within the right-of-way unless approved in writing by the land manager.

Spoil placement.

F-16 Dike (or spoil) site must be stripped of surface litter and cored by dragline to mineral soil or to a depth of 0.9 m (3 ft).

Surface damage.

F-16P In order to minimize habitat and resource loss, work crews and support vehicles/equipment are confined to the immediate construction site at all times unless otherwise approved in writing by the land manager.

F-17P Permittee shall report in writing to the land manager unanticipated damages to waterflow regimes, vegetation, wildlife, and all other physical, biological, or chemical elements of the refuge. At the option of, and in a manner determined by, the land manager, the damages will be repaired to his satisfaction immediately following completion of the canal.

F-19P Permittee shall undertake measures, to the extent and in a manner determined by the land manager, to conserve resources and minimize turbidity/erosion problems.

Effects on wildlife.

F-18P Permittee shall not harass or disturb any wildlife during any phase of the construction. Should it appear necessary to alter a nest, bed, den, or home, all operations shall be halted until the land manager grants approval or provides for an acceptable alternative.

Map of operations.

F-20P Following the completion of the canal and wellsite location, the permittee shall provide an accurate map indicating locations and types of all land surface alterations that were realized during the operations.

Wellsite Preparation and Operation for Leveed Marsh-Floor Locations

General.

F-22P Prior to initiating any field work, permittee shall meet with the land manager and provide specifications of the operation including, but not limited to: (1) maps showing locations of wellsite and levees, routes of access and travel, and equipment/materials storage areas; (2) information concerning sizes, types, and numbers of equipment to be used; and (3) a time schedule.

The permittee shall agree to a reasonable adjustment of schedule or alignment of drilling site and levees in order to minimize the disturbance of water flow, critical plant, assemblages, unique natural areas, important wildlife areas, or other desirable ecological features. All activities are confined to those areas as finalized on the attached maps.

F-29P Permittee will have fire suppression and controlling equipment approved by the land manager on the site at all times. At signs of fire, permittee will expend manpower to extinguish blaze.

F-31P The granted right-of-way shall be for the specific use described and may not be construed to include the further right to authorize any other use within the right-of-way unless approved in writing by the land manager.

Mud and waste management.

F-24P No oil, gasoline, or other materials capable of causing pollution will be discharged into refuge waters or lands.

F-25P During operations the permittee shall hold all equipment, materials, debris, and trash in a fashion and location acceptable to the land manager; such items shall be removed from the refuge immediately upon project completion.

Surface damage.

F-23P In order to minimize habitat and resource loss, work crews and support vehicles/equipment are confined to the immediate construction site at all times unless otherwise approved in writing by the land manager.

F-26P Permittee shall report in writing to the land manager unanticipated damages to waterflow regimes, vegetation, wildlife, and all other physical, biological, or chemical elements of the refuge. At the option of, and in a manner determined by, the land manager, the damages will be repaired to his satisfaction immediately following completion of drilling operations. All costs are to be borne by the permittee.

F-28P Permittee shall undertake measures, to the extent and in a manner determined by the land manager, to conserve resources and minimize turbidity/erosion problems.

Effects on wildlife.

F-27P Permittee shall not harass or disturb any wildlife during any phase of the activities. Should it appear necessary to alter a nest, bed, den, or home, all operations shall be halted until the land manager grants approval or provides for an acceptable alternative.

Map of operations.

F-30P Following the completion of the wellsite construction, the permittee shall provide an accurate map indicating locations and types of all land surface alterations that were realized during the operations.

Installation and Maintenance of Lines

Facility planning.

F-37P Prior to commencement of any field work, permittee shall meet with the land manager and provide specifications of the operation including, but not limited to: (1) maps showing locations of pipeline alignment, access routes, and equipment storage areas; (2) information concerning sizes, types, and numbers of equipment to be used; and (3) a time schedule. The permittee shall agree to a reasonable alignment adjustment in order to minimize the disturbance of water flows, critical plant assemblages, unique natural areas, important wildlife areas, or other desirable ecological features. All activities shall be confined to those areas as finalized on the attached maps.

F-48P Upon completion of the construction, the permittee shall furnish the land manager an accurate survey of the pipeline "as built," including typical cross sectioning.

General agreements.

F-40P Unless otherwise authorized by the land manager, installation of all flowlines, supply lines, and utility lines shall be confined to existing leveed roads or dredged canal rights-of-way.

F-41P Upon termination of the operation, the area shall be restored to as nearly as possible the original condition to the satisfaction of the land manager. Restoration may include, but is

not limited to, reestablishing initial site contours and revegetating the site.

F-45P The permittee shall correct any problems identified by the land manager that result from the pipeline or its construction, including but not limited to, damage to the environment, including damage to fish, wildlife, and wildlife hatitat.

F-17 Grantee shall conduct all its operations so as to prevent the escape of gases, liquids, or other deleterious substances from any of its pipelines or other facilities onto or into lands or waters of the refuge.

F-18 The USFWS retains the right to use the right-of-way for the planting of wildlife food and cover crops, provided the same shall not endanger the pipeline.

F-46P In the control of vegetation within the rights-of-way no herbicide or pesticide shall be used without first obtaining permission in writing from the land manager as to type or kind of chemical to be used and the rate, method, and time of application.

F-49P Permittee shall take all reasonable precautions to prevent the escape of fire and to suppress same should it occur.

Construction right-of-way.

F-19 The right-of-way shall not exceed the width of 12 m (40 ft), being 6 m (20 ft) on each side of the centerline. (Necessary widths range from 13 to 49 m (40 to 150 ft) and depend on line type, land-use objectives, and other site-specific variables.)

Vehicle access and movement.

F-42P Ingress and egress to and from the pipeline during construction shall be limited to the minimum number of vehicles necessary and to the areas of right-of-way for the pipeline, the permit area, and existing road and waterways, unless otherwise authorized by the land manager or this permit.

F-43P All equipment movement along the construction right-of-way shall be kept to a minimum during construction. Marsh buggies shall not make collection trips along the line to pick up personnel.

On completion of a day's work, this equipment shall go directly to the canal bank and park against the toe of the levee (not on top of the levee). Boats shall collect crews along the canal banks for trips out of the marsh.

F-54P Ingress and egress of ground inspection and overflight patrols will be coordinated between the permittee and land manager for each occurrence.

Spoil placement.

F-32P The spoil material from the canal shall not be placed closer than (desired distance) meters from the banks of navigable waterways crossed, nor disposed of where it will enter navigation or drainage channels.

F-33P The banks of the levees created by spoil shall have gaps cut in them at least (desired width) meters wide with not over (desired distance) - meter intervals between the gaps. If spoil from the canal is placed on both sides of the canal, the gaps to be cut in the levees shall be directly opposite each other. Gaps shall be provided for all natural drainages. Spoil shall be placed within the construction right-of-way as directed by the land manager.

Line depth below surface.

F-21 The top of the pipeline shall be placed not less than 0.6 m (2 ft) below the present surface of the adjacent marsh land. (Dimensions will vary with land-use objectives.)

F-22 The top of the pipeline shall be placed not less than 2.4 m (8 ft) below the bottom of existing canals and waterways, for a distance of 15.2 m (50 ft) on each side of said canals and waterways. (Dimensions will vary with land-use objectives.)

Line placement.

F-34P If flowlines must be placed through marsh, they should be laid directly on the marsh surface and allowed to sink and settle naturally. They should not be buried since vehicle movement as well as digging and backfilling would result in further channelization and marsh alterations.

F-39P Unless site conditions are shown to be totally unsuitable, the "push-ditch" or "shove" method of pipeline installation shall be utilized.

Backfilling

F-23M All pipeline ditches shall be completely backfilled with all available spoil removed during excavation operations such that final surface contours approach original site conditions as nearly as possible. In the event additional fill material is required to compensate for settlement, it shall be removed from scattered deep holes within the easement, rather than from continual surface cuts.

Plugs along banks for pipeline ditches.

F-36P Earthen marsh plugs shall be constructed at intervals of (desired length) meters along the pipeline and at the point of intersection of the pipeline and major watercourses such as lakes, ponds, bayous, canals, ditches, and tidal creeks. These plugs shall extend a minimum of (desired length) meters on each side of the pipeline ditch and shall be a minimum of (desired width) meters wide and (desired height) meters high. They shall be maintained by the pipeline owner to the land manager's specifications.

Maintenance.

F-52P Future maintenance of backfilled areas shall remain the responsibility of the permittee.

F-53P Permittee is authorized to patrol and inspect the line with prior clearance of the land manager.

Placement and Operation of Production Facilities

Facility planning.

F-55P Prior to initiating any field work, permittee shall meet with the land manager and provide specifications of the operation including, but not limited to: (1) maps showing location of production facilities, access routes, and equipment storage areas; (2) information concerning sizes, types, and numbers of equipment to be used; and (3) a time schedule. The permittee

shall agree to a reasonable facility siting adjustment in order to minimize the disturbance of water flows, critical plant assemblages, unique natural areas, important wildlife areas, or other desirable ecological features. All activities shall be confined to those areas as finalized on the attached maps.

F-63P The permittee shall provide the land manager with a design which restricts the complex size to the minimum area required to conduct processing operations, store equipment and supplies, and contain waste materials. Pad easement shall not exceed (desired area) square meters unless otherwise authorized by the land manager.

Restoration.

F-64P Upon completion of any oil and gas activity which no longer requires the use of any existing processing site, the permittee shall, unless otherwise authorized by the land manager, remove the production facility, levees, burn pits, etc. and restore the entire easement to its original preconstruction condition as specified by the land manager. Restoration measures shall include, but are not limited to, reestablishing initial site contours and site revegetation.

F-65P Following completion of site restoration, the land manager may conduct an on-site inspection to verify that restoration or mitigation of any environmental damages has been satisfactorily completed. He may, at that time, require additional conservation measures necessary to satisfy permit requirements.

General.

F-68P All treatment and processing equipment used by the permittee, such as pumps, valves, hoses, hose connections, tanks, and pipelines, that could cause oil, gas, or field brine pollution or contamination must be maintained and repaired so as to prevent leakage or waste. Any inevitable waste in proximity to the source must be confined so as to prevent escape that might otherwise occur as a result of rains, high water, or natural drainage.

F-70P Utilization and disposal of used or waste solid materials resulting from production processes or treatment equipment, such as oil-contaminated sand, brine sediments, chemical precipitates, or other filtrable solids, as fill material is prohibited on the refuge.

F-71P The permittee shall take such measures to prevent soild erosion from starting within the easement as the land manager may prescribe and shall take such other conservation measures, including revegetation, that may be requesed by the land manager.

F-74P Permittee will have fire suppression and controlling equipment approved by the land manager on the site at all times. At signs of fire, permittee will expend manpower to extinguish blaze.

Map of operations.

F-72P Following the completion of the treatment complex construction, the permittee shall provide an accurate map indicating locations and types of all land surface alterations effected during the operation.

Right-of-way.

F-24 The right-of-way shall not exceed the width of 12.2 m (40 ft) being 6.1 m (20 ft) on each side of the centerline. (Necessary widths depend on line type, land-use objectives, and other site-specific objectives.)

Patrolling and inspecting pipelines.

F-61P Unless otherwise specifically authorized by the land manager, all routine pipeline inspection tours shall be conducted by means of aircraft.

Maintenance dredging of terminal.

F-56P The land manager will be notified in advance of actual commencement of maintenance dredging and spoiling operations.

F-57P All spoil will be deposited and contained within a spoil retention levee.

F-59P In shallow open waters, spoil shall be deposited so as not to reduce water depths by more than (desired depth) cm. In areas where this is not possible, spoil shall be deposited on alternate sides of access channels every (desired interval) meters with (desired width)-meter gaps left between the spoil deposits.

Maintenance dredging in canal.

F-60P No natural or man-made waterways presently open shall be blocked by spoil deposition resulting from maintenance dredging.

Burning pit.

F-73P The land manager shall approve of the burning pit location prior to construction. The pit shall be constructed and maintained so as to prevent the escape of waste materials into the marsh.

Spills and Cleanup

Contingency plan.

F-75P The permittee shall file an "accidental spill" contingency plan with the land manager prior to initiating well-drilling, pipeline, or production facility operations. The plan shall outline, but is not limited to, proposed procedures to report, contain, and clean up all types of oil/brine spills in the fresh marsh, as well as proposed reclamation measures for site restoration.

General.

F-76P All spills or accidental discharges of oil, field brine, or other petrochemical substances of greater than (quantity) liters shall be reported to the land manager within 24 hr.

F-77P Containment and cleanup of an accidental spill shall be conducted as soon as possible following its discovery, unless otherwise specified by the land manager.

Methods and techniques.

F-78P In the control of spill oil or oil-field substances no dispersants, emulsifiers, or other chemical agents shall be used without first obtaining permission in writing from the land manager as to the type of kind of chemical to be used and the rate, time, and method of application.

F-79P In the event of an accidental spill or discharge of oil or any other petrochemical substance, the permittee shall take such measures as may be necessary or requested by the land manager to disperse and prevent waterfowl, wading birds, and shorebirds from using oil-contaminated marsh areas.

F-80P Unless otherwise authorized by the land manager, the permittee shall conduct all cleanup operations occurring in shallow semi-aquatic areas or on firm marsh substrates by boat and/or by hand. The use of marsh buggies, draglines, and other similar heavy equipment in such areas is prohibited.

F-81P The permittee shall be permitted to immediately burn any oil accidentally escaping anywhere in the field. Permittee will not be held responsible for any damage to refuge marsh vegetation from such burning.

F-82P The permittee shall take all reasonable precautions necessary during the spill containment and cleanup phases to minimize disturbances to the marsh surface, existing drainage patterns, and marsh vegetation.

F-83P The permittee shall take all necessary precautions to avoid damaging the root systems of oil-contaminated marsh flora. If such vegetation is mechanically removed, only the aerial portions should be taken.

Restoration.

F-84P Following the cleanup phase of a brine or oil spill, the permittee shall, unless otherwise authorized by the land manager, restore the affected area to its original preaccident or better condition as specified by the land manager. Restoration measures shall include, but are not restricted to, reestablishment of former drainage patterns and revegetation with native flora.

Site Shutdown and Restoration

Shutdown.

F-86P Should a lease prove not to contain commercial reserves, the boards will be removed and the road base backfilled to return the marsh site to its original state and surface contours.

F-87P Should the well be productive, the road and landing will be improved to a permanent status. The wellsite will be reduced in size before also being made permanent.

F-88P In the event all or a portion of the facilities are removed from the refuge as the result of the termination of operations or for other reasons, the permittee shall completely remove all spoil and ring levees, completely backfill or plug all canals and ditches, and provide regular gaps in all levees not removed, as specified by the land manager.

Restoration.

F-89P Prior to initiating any extensive restoration field work, the permittee shall meet with the land manager and provide specifications of the operation including, but not limited to: (1) maps showing features to be restored, points of alterations, and access routes; (2) information concerning sizes, types, and numbers of equipment to be used; and (3) a time schedule. The permittee shall agree to reasonable modifications in order to minimize the disturbance of desirable water flows, wildlife concentrations, or other desirable ecological features. All activities shall be confined to those areas as finalized on the attached maps.

F-85P All natural bayous are to be swept clean of bottom ruts resulting from equipment crossing during construction.

F-91P As specified by the land manager, restoration procedures may require the construction of nesting platforms, denning sites, or other wildlife habitat improvements to replace natural features lost or altered by permittee activities.

F-92P Following completion of restoration procedures, the land manager may conduct an on-site inspection to verify that restoration or mitigation of any environmental damages has been satisfactorily completed and may, at that time, require additional conservation measures necessary to satisfy permit requirements.

DELTA MARSH

Seismic Preexploration

General.

D-1M Prior to initiating any field work, permittee shall meet with the land manager and provide specifications of the operation including, but not limited to: (1) maps showing locations of shot lines and holes, routes of access and travel, and equipment storage areas; (2) information concerning sizes, types, and numbers of equipment to be used; and (3) a time schedule. The permittee shall agree to a reasonable adjustment of schedule or alignment of shot lines in order to minimize the disturbance of water flows, critical plant assemblages, unique natural areas, important wildlife areas, or other desirable ecological features. All activities are confined to those areas as finalized on the attached maps.

D-2P Permittee shall report in writing to the land manager unanticipated damages to waterflow regimes, vegetation, wildlife, and all other physical, biological, or chemical elements of the refuge. At the option of, and in a manner determined by, the land manager, the damages will be repaired to his satisfaction immediately following completion of the survey. All costs are to be borne by the permittee.

D-3P Permittee will have fire suppression and controlling equipment approved by the land manager on the site at all times. At signs of fire, permittee will expend manpower to extinguish blaze.

Timing of seismic activities.

D-4 This permission is limited to a period from March 15 to July 1. (Exact dates will vary with species of concern and with location of the refuge.)

Surface disturbance.

D-1P Permittee shall not disturb any waterflow pathway, improvement, structure, marker, or other physical feature of the system. Operations at all times shall be conducted so as to minimize the total surface area affected.

Effects on wildlife.

D-4M Permittee shall not harass or disturb any wildlife during any phase of the seismic survey. Should it appear necessary to alter a nest, bed, den, or home, all operations shall be halted until the land manager grants approval or provides an acceptable alternative.

Retrieval of equipment.

D-9 At the conclusion of the seismic survey, all pipe will be pulled from shotholes and the said shotholes plugged with a concrete plug or in a manner acceptable to the refuge manager.

Cleanup and restoration.

D-10M During operations the permittee shall hold all equipment, materials, debris, and trash in a fashion and location acceptable to the land manager; such items shall be removed from the refuge immediately upon project completion.

Shot hole map.

D-12 At the conclusion of operations, the refuge manager will be furnished with an accurate map showing location of all shotholes.

Gravity Preexploration

General.

D-13M Prior to initiating any field work, permittee shall meet with the land manager and provide specifications of the operation including, but not limited to: (1) maps showing locations of stations, routes of access and travel, and equipment storage areas; (2) information concerning sizes, types, and numbers of equipment to be used; and (3) a time schedule. The permittee shall agree to a reasonable adjustment of schedule, stations, or support equipment in order to minimize the disturbance of water flows, critical plant assemblages, unique natural areas, important wildlife areas, or other desirable ecological features. All activities are confined to those areas as finalized on the attached maps.

Effects on wildlife.

D-15M Permittee shall not harass or disturb any wildlife during any phase of the gravity survey. Should it appear necessary to alter a nest, bed, den, or home, all operations shall be halted until the land manager grants approval or provides for an acceptable alternative.

Vehicle movement.

D-16 The permittee will be required to transport both men and materials throughout the survey by means of boats only. Surface vehicles will not be permitted within the refuge area.

Cleanup and restoration.

D-17M Permittee shall report in writing to the land manager unanticipated damages to waterflow regimes, vegetation, wildlife, and all other physical, biological, or chemical elements of the refuge. At the option of, and in a manner determined by, the land manager, the damages will be repaired to his satisfaction immediately following completion of the survey. All costs are to be borne by the permittee.

Site Access by Canal and Wellsite Dredging

General.

D-18M Prior to initiating any field work, permittee shall meet with the land manager and provide specifications of the operation including, but not limited to: (1) maps showing locations of canals and spoil deposits, routes of access and travel, and equipment storage areas; (2) information concerning sizes, types, and numbers of equipment to be used; and (3) a time schedule. The permittee shall agree to a reasonable adjustment of schedule or alignment of canals and spoil in order to minimize the disturbance of water flows, critical plant assemblages, unique natural areas, important wildlife areas, or other desirable ecological features. All activities are confined to those areas as finalized on the attached maps.

D-9P The right-of-way granted shall be for the specific use described and may not be construed to include the further right to authorize any other use within the right-of-way unless approved in writing by the land manager.

Spoil placement.

D-19 In construction of the access canal all spoil shall be placed in a continuous levee along both sides of the excavation so as to provide closed system.

D-22 To pile the spoil to a height of less than 0.9 (3 ft) above water, so that with slumping, drying, and subsidence, the final spoil height should be at a maximum elevation of less than 0.6 m (2 ft) above low (summer) water levels.

D-23 When dredging channels through open waters spoil should be placed in separated spoil dumps on both sides of the channel so as not to be continuous. Placement should be to allow freedom to water movement and movement of aquatic organisms.

D-24 Spoil may be pumped into deeper lakes and ponds to create marsh habitat or to form small islands. Final configuration of such dumps or spoil islands should be as low, circular islands, 33 to 66 m (200 to 200 ft) in diameter separated by 10 to 16 m (30 to 50 ft) of open water.

D-25 The permittee will remove any spoil placed during operations provided it is later found that the referenced spoil is detrimental, from the standpoint of the refuge, to the normal flow of water.

Surface damage.

D-4P In order to minimize habitat and resource loss, work crews and support vehicles/equipment are confined to the immediate construction site at all times unless otherwise approved in writing by the land manager.

D-5P Permittee shall report in writing to the land manager unanticipated damages to waterflow regimes, vegetation, wildlife, and all other physical, biological, or chemical elements of the refuge. At the option of, and in a manner determined by, the land manager, the damages will be repaired to his satisfaction immediately following completion of the canal. All costs are to be borne by the permittee.

D-7P Permittee shall undertake measures, to the extent and in a manner determined by the land manager, to conserve resources and minimize turbidity/erosion problems.

Effects on wildlife.

D-6P Permittee shall not harass or disturb any wildlife during any phase of the construction. Should it appear necessary to alter a nest, bed, den, or home, all operations shall be halted until the land manager grants approval or provides for an acceptable alternative.

Map of operations.

D-8P Following the completion of the canal and wellsite location, the permittee shall provide an accurate map indicating locations and types of all land surface alterations that were realized during the operations.

Dredged Wellsite Operation

Mud and waste management.

D-12P During operations the permittee shall hold all equipment, materials, debris, and trash in a fashion and location acceptable to the land manager; such items shall be removed from the refuge immediately upon project completion.

D-13P No oil, gasoline, or other materials capable of causing pollution will be discharged into refuge waters or lands.

Surface damage.

D-10P In order to minimize habitat and resource loss, work crews and support vehicles/equipment are confined to the immediate right-of-way at all times unless otherwise approved in writing by the land manager.

D-11P Permittee shall report in writing to the land manager unanticipated damages to waterflow regimes, vegetation, wildlife, and all other physical, biological, or chemical elements of the refuge. At the option of, and in a manner determined by, the land manager, the damages will be repaired to his satisfaction immediately following completion of the construciton. All costs are to be borne by the permittee.

D-15P Permittee shall undertake measures, to the extent and in a manner determined by the land manager, to conserve resources and minimize turbidity/erosion problems.

Effects on wildlife.

D-14P Permittee shall not harass or disturb any wildlife during any phase of the activities. Should it apear necessary to alter a nest, bed, den, or home, all operations shall be halted until the land manager grants approval or provides for an acceptable alternative.

Installation and Maintenance of Lines

Facility planning.

D-16P Prior to commencement of any field work, permittee shall meet with the land manager and provide specifications of the operation including, but not limited to: (1) maps showing locations of pipeline alignment, access routes, and equipment storage areas; (2) information concerning sizes, types, and numbers of equipment to be used; and (3) a time schedule. The permittee shall agree to a reasonable alignment adjustment in order to minimize the disturbance of water flows, critical plant assemblages, unique natural areas, important wildlife areas, or other desirable ecological features. All activities shall be confined to those areas as finalized on the attached maps.

D-27 No construction work shall be carried on during the period from November 1 to March 1. (Dates will vary with the species of concern as well as the location of the refuge.)

D-34 Upon completion the grantee shall furnish an accurate survey of the pipeline 'as built', including typical cross-sectioning.

General agreements.

D-35 The permittee shall take all reasonable precautions to prevent escape of fire and to suppress same should it escape.

D-36 Grantee shall conduct all its operations so as to prevent the escape of gases, liquids, or other deleterious substances from its established pipelines or other facilities onto or into lands or waters of the refuge.

D-38 Grantee shall correct any problems identified by the refuge manager that result from the pipeline or its construction including, but not limited to: damage to the environment. including damage to fish and wildlife habitat.

D-42 The USFWS retains the right to use the right-of-way for the planting of wildlife food and cover crops, provided the same shall not endanger the pipeline.

D-41M In the control of vegetation within the rights-of-way, no herbicide or pesticide shall be used without permission in writing from the land manager as to type or kind of chemical to be used and the rate, method, and time of application.

D-21P Upon termination of the operation, the area shall be restored to as nearly as possible to the original condition to the satisfaction of the land manager. Restoration may include, but is not limited to, reestablishing initial site contours and revegetating the site.

Construction right-of-way.

D-47 The width of this permit shall be limited to 6 m (20 ft) and shall parallel and lie adjacent to the preexisting 15 m (50 ft) right-of-way. (Necessary widths range from 6 to 31 m (20 to 100 ft) and depend on line type, land-use objectives, and other site-specific variables.)

D-48 The rectifier unit and anode bed will be connected by buried cable. The 3-m (10-ft) right-of-way for the cable contains approximately 0.06 ha (0.12 acres).

Vehicle access and movement.

D-22P Ingress and egress to and from the pipeline during construction shall be limited to the minimum number of vehicles necessary and to the areas of right-of-way for the pipeline, the permit area, and existing roads and waterways, unless otherwise authorized by the land manager or this permit.

D-23P All equipment movement along the construction right-of-way shall be kept to a minimum during construction. Marsh buggies shall not make collection trips along the lines to pick up personnel. On completion of a day's work, this equipment shall park against the toe of the levee (not on top of the levee). Boats shall collect crews along the canal banks for trips out of the marsh.

Spoil placement.

D-21P In the case of flotation canals, the spoil materials from the canal shall not be placed closer than (desired distance) meters from the banks of navigable waterways crossed, nor disposed of where they will enter ponds, lakes, canals, or other watercourses.

D-24P Spoil levees created as a result of canal dredging shall have gaps cut in them at least (desired width) meters wide with intervals of not less than (desired distance) meters between gaps. If spoil from the canal is placed on both sides of the canal, the gaps to be cut in the levees shall be directly opposite each other. Spoil from the dredging of a canal shall be placed within the construction right-of-way as directed by the land manager.

Line depth below surface.

D-57 The top of the pipeline shall be placed at not less than 0.9 m (3 ft) below the present surface of the land.

Line placement.

D-60 Flowlines should be laid across the marsh surface and allowed to sink and settle naturally. They should not be buried since vehicle movement as well as digging and backfilling would result in further channelization and marsh alterations.

D-17P To the greatest extent possible, new gas and oil pipelines will use existing pipeline easement areas to route the facility across refuge lands.

D-18P Unless site conditions are shown to be totally unsuitable, the "push-ditch" or "shove" method of pipeline installation shall be utilized.

D-19P To the greatest extent possible, installation of all flowlines, supply lines, and utility lines shall be confined to existing levees, dredged canals, and existing line access routes.

Backfilling.

D-66M All pipeline ditches shall be completely backfilled with all available spoil removed during excavation operations such that final surface contours approach original site conditions as nearly as possible. In the event additional fill material is required to compensate for settlement, it shall be removed from scattered deep holes within the easement, rather than from continual surface cuts.

Maintenance.

D-70M Earthen marsh plugs shall be constructed at intervals of (desired distance) meters along the pipeline and at the point of intersection of the pipeline and major watercourses such as lakes, ponds, bayous, canals, ditches, and tidal creeks. These plugs shall extend a minimum of (desired distance) meters on each side of the pipeline ditch and shall be a minimum of (desired width) meters wide and (desired height) meters high. The plugs shall be maintained by the permittee to the satisfaction of the land manager.

D-72 The grantee is authorized to patrol and inspect the line upon prior clearance with the refuge manager in charge.

Placement and Operation of Production Facilities

Facility planning.

D-27P Prior to initiating any field work, permittee shall meet with the land manager and provide specifications of the operation including, but not limited to: (1) maps showing locations of the production complex, access routes, and equipment storage areas; (2) information concerning sizes, types, and numbers of equipment to be used; and (3) a time schedule. The permittee shall agree to reasonable facility siting adjustments in order to minimize the disturbance of water flows, critical plant assemblages, unique natural areas, important wildlife areas, or other desirable ecological features. All activities shall be confined to those areas as finalized on the attached maps.

D-30P The permittee shall provide the land manager with a design which restricts the complex size to the minimum area required to conduct processing operations, store equipment and supplies, and contain waste materials. Production site easement shall not exceed

(desired area) square meters unless otherwise authorized by the land manager.

Restoration.

D-31P Upon completion of any oil and gas activity which no longer requires the use of an existing processing site, the permittee shall, unless otherwise authorized by the land manager, remove the production facility, levees, burn pits, etc. and restore the entire easement to its original preconstruction condition as specified by the land manager. Restoration measures shall include, but are not limited to, reestablishing initial site contours and site revegetation.

D-32P Following completion of site restoration, the land manager may conduct an on-site inspection to verify that restoration or mitigation of any environmental damages have been satisfactorily completed and may, at that time, require additional conservation measures necessary to satisfy permit requirements.

General.

D-33P All treatment and processing equipment used by the permittee that could cause oil, gas, or field brine pollution or contamination, such as pumps, valves, hoses, hose connections, tanks, and pipelines, must be maintained and repaired to prevent leakage or waste. Any inevitable waste in proximity to the source must be confined so as to prevent escape that might otherwise occur as a result of rains, high water, or natural drainage.

D-35P Utilization and disposal of used or waste solid materials resulting from production processes or treatment equipment, such as oil-contaminated sand, brine sediments, chemical precipitates, or other filtrable solids, as fill material is prohibited on the refuge.

D-36P The permittee shall take such measures to prevent solid erosion from starting within the easement as the land manager may prescribe and shall take such other conservation measures, including revegetation, that may be requested by the land manager.

Map of operations.

D-37P Following the completion of the treatment complex construction, the permittee shall provide the land manager with an accurate

map indicating locations and types of all land surface alterations effected during the operation.

Right-of-way.

D-74 The operation right-of-way shall be limited to 16.4 m (50 ft) being 8.2 m (25 ft) on each side of the center line. (Necessary widths range from 1 to 100 m (3 to 300 ft) and depend on line type, land use objectives and other site-specific variables.)

D-76 The width of the operation right-of-way shall be limited to the width of the pipe.

Patrolling and inspecting pipelines.

D-78 The grantee is authorized to patrol and inspect the line upon prior clearance with the refuge manager in charge.

D-28P No inspections of the pipeline right-of-way will be permitted by means of aircraft during periods of waterfowl concentrations between (date) and (date), and routine ground-level inspections of the pipeline will be held to a minimum during the above period.

Maintenance dredging at terminal.

D-81 All spoil will be deposited and contained within the spoil retention levee.

D-82 Spoil will be spread and leveled to the satisfaction of the refuge manager.

Maintenance dredging in canals.

D-84 In shallow bays and other open water areas, spoil shall be deposited so as not to reduce water depths by more 15 cm (6 inches). In areas where this is not practicable, spoil shall be deposited on alternate sides of access channels every 150 m (500 ft) with 15 m (50 ft) gaps left between the spoil deposits.

D-85M No natural or man-made waterways presently open shall be blocked by spoil deposition resulting from maintenance dredging.

D-86 Construction shall be limited to the period March 15 through October 15. (Dates vary with species of concern as well as the location of the refuge.)

Silt control. (Silt control involves enlarging channels to increase water flow velocity and to decrease siltation.)

D-87 That the canal and levee construction and clean out operations be conducted with a dragline--not a hydraulic dredge.

D-88 The pond and marsh are to be enclosed with a continuous levee built to elevation 0.45 m (1.5 ft) after settlement spoil from the construction of new canals shall be used to form a continuous levee. The spoil obtained from cleaning of existing canals should be deposited in a continuous levee next to existing canal.

D-90 Proposed canal is to come into Main Pass at a rather sharp angle away from the flow of water through pass. The purpose of the angle is to reduce water and silt flow from Main Pass into and through other internal canals and ponds.

Burning pit.

D-91M The land manager shall approve of the burning pit location prior to construction. The pit shall be constructed and maintained so as to prevent the escape of waste materials into the marsh.

Spills and Cleanup

Contingency plan.

D-39P The permittee shall file an "accidental spill" contingency plan with the land manager prior to initiating well-drilling, pipeline, or production facility operations. The plan shall outline, but is not limited to, proposed procedures to report, contain, and clean up all types of oil/brine spills in the delta marsh, as well as proposed reclamation measures for site restoration.

General.

D-40P All spills or accidental discharge of oil, field brine, or other petrochemical substances of greater than (quantity) liters shall be reported to the land manager within 24 hr.

D-41P Containment and cleanup of an accidental spill shall be conducted as soon as possible following its discovery, unless otherwise specified by the land manager.

Methods and techniques.

D-42P During the control of spill oil or oil-field substances, no dispersants, emulsifiers, or other chemical agents shall be used without permission in writing from the land manager as to the type or kind of chemical to be used and the rate, time, and method of application.

D-43P In the event of an accidental spill or discharge of oil or any other petrochemical substance, the permittee shall take such measures as may be necessary or requested by the land manager to disperse and prevent waterfowl, wading birds, and shorebirds from using oil-contaminated marsh areas.

D-97 All field personnel are instructed to burn immediately any oil accidently escaping anywhere in the field. Permittee will not be held responsible for any damage to refuge marshland vegetation as a result of such burning.

D-44P Unless otherwise authorized by the land manager, the permittee shall conduct all cleanup operations occurring in shallow semi-aquatic areas or on firm marsh substrates by boat an/or by hand. The use of marsh buggies, draglines, and other similar heavy equipment in such areas in prohibited.

D-45P The permittee shall take all reasonable precautions necessary during the spill containment and cleanup phases to minimize disturbances to the marsh surface, existing drainage patterns, and marsh vegetation.

D-46P The permittee shall take all necessary precautions to avoid damaging the root systems of oil-contaminated marsh flora. If such vegetation is mechanically removed, only the aerial portions should be taken.

Restoration.

D-47P Following the cleanup phase of a brine or oil spill, the permittee shall, unless otherwise authorized by the land manager, restore the affected area to its original preaccident or better condition as specified by the land manager. Restoration measures

shall include, but are not restricted to, reestablishment of former drainage patterns and revegetation with native flora.

Site Shutdown and Restoration

Shutdown.

D-49P In the event all or a portion of the facilities are removed from the refuge as the result of the termination of operations or for other reasons, the permittee shall completely backfill or plug all canals and ditches and provide regular gaps in all levees not removed, as specified by the land manager.

Restoration.

D-50P Prior to commencement of any extensive restoration field work, the permittee shall meet with the land manager and provide specifications of the operation including, but not limited to: (1) maps showing features to be restored, points of alterations, and access routes; (2) information concerning sizes, types, and numbers of equipment to be used; and (3) a time schedule. The permittee shall agree to reasonable modifications in order to minimize the disturbance of desirable water flows, wildlife concentrations, or other desirable ecological features. All activities shall be confined to those areas as finalized on the attached maps.

D-98M Upon termination of operations, the area shall be restored as nearly as possible to conditions prior to the commencement of operations. Restoration shall include, but is not limited to, reestablishment of surface contours, restoration of site drainage pathways, and revegetation.

D-48P All natural bayous are to be swept clean of bottom ruts resulting from equipment crossing during construction.

D-51P As specified by the land manager, restoration procedures may require the construction of nesting platforms, denning sites, or other wildlife habitat improvements to replace natural features lost or altered by permittee activities.

D-52P Following completion of restoration procedures, the land manager may conduct an on-site inspection to verify that restoration or mitigation of any environmental damages has been satisfactorily completed and may, at that time, require additional conservation measures necessary to satisfy permit requirements.

LEVEES AND SPOIL BANKS

Seismic Preexploration

General.

L-1P Prior to commencement of any field work, permittee shall meet with the land manager and provide specifications of the operation including, but not limited to: (1) maps showing locations of shot lines and holes, routes of access and travel, and equipment storage areas; (2) information concerning sizes, types, and numbers of equipment to be used; and (3) a time schedule. The permittee shall agree to a reasonable adjustment of schedule or alignment of shot lines in order to minimize the disturbance of water flows, critical plant assemblages, unique natural areas, important wildlife areas, or other desirable ecological features. All activities are confined to those area as finalized on the attached maps.

L-6P Permittee will have fire suppression and controlling equipment approved by the land manager on the site at all times. At signs of fire, permittee will expend manpower to extinguish blaze.

Effects on wildlife.

L-4P Permittee shall not harass or disturb any wildlife during any phase of the seismic survey. Should it appear necessary to alter a nest, bed, den, or home, all operations shall be halted until the land manager grants approval or provides for an acceptable alternative.

Levee protection.

L-1 When pool levees are crossed a wooden walkway must be built that extends into the water so as to protect the toe of the levee.

Vehicle movement.

L-2 Buggies should be left parked on the toe of the levee, not parked on top of the levee.

L-2P In areas with standing water, marsh buggies must not run over the same trail twice.

L-3P Seismic crews shall consolidate all trips across the levee/spoil system; use one buggy to transport crews unless directed otherwise by the land manager.

Equipment retrieval.

L-8P At conclusion of survey, all pipe will be pulled from shot holes and the latter plugged in a manner satisfactory to the land manager.

Cleanup and restoration.

L-3M Permittee shall report in writing to the land manager unanticipated damages to waterflow regimes, vegetation, wildlife, and all other physical, biological, or chemical elements of the refuge. At the option of, and in a manner determined by, the land manager, the damages will be repaired to his satisfaction immediately following completion of the survey. All costs are to be borne by the permittee.

L-5P During operations the permittee shall hold all equipment, materials, debris, and trash in a fashion and location acceptable to the land manager; such items shall be removed from the refuge immediately upon project completion.

Shot hole map.

L-7P Immediately following the survey, an accurate map showing location of shot lines and all shot holes must be supplied.

Gravity Preexploration

General.

L-9P Prior to initiating any field work, permittee shall meet with the land manager and provide specifications of the operation including, but not limited to: (1) maps showing locations of stations, routes of access and travel, and equipment storage areas; (2) information concerning sizes, types, and numbers of equipment to be used; and (3) a time schedule. The permittee shall agree to a reasonable adjustment of schedule, stations, or support equipment in order to minimize the disturbance of water flows, criticial plant assemblages, unique natural areas, important wildlife areas, or other desirable ecological features.

All activities are confined to those areas as finalized on the attached maps.

Effects on wildlife.

L-11P Permittee shall not harass or disturb any wildlife during any phase of the gravity survey. Should it appear necessary to alter a nest, bed, den, or home, all operations shall be halted until the land manager grants approval or provides for an acceptable alternative.

Vehicle movement.

L-10P A maximum of one surface vehicle may be used during the survey. the vehicle must consolidate all passages across the marsh and must not run over the same trail twice.

Cleanup and restoration.

L-4M Permittee shall report in writing to the land manager unanticipated damages to waterflow regimes, vegetation, wildlife, and all other physical, biological, or chemical elements of the refuge. At the option of, and in a manner determined by, the land manager, the damages will be repaired to his satisfaction immediately following completion of the survey. All costs are to be borne by the permittee.

Site Access by Canal

General.

L-12P Prior to initiating any field work, permittee shall meet with the land manager and provide specifications of the operation including, but not limited to: (1) maps showing canal location, levee alignment and point of intersection, spoil deposits, routes of access and travel, and equipment storage areas; (2) information concerning sizes, types, and numbers of equipment to be used; and (3) a time schedule. The permittee shall agree to a reasonable adjustment of schedule or alignment of canals and spoil in order to minimize the disturbance of water flows, critical plant assemblages, unique natural areas, important wildlife areas, or other desirable ecological features. All activities are confined to those areas as finalized on the attached maps.

L-18P The right-of-way granted shall be for the specific use described and may not be construed to include the further right to authorize any other use within the right-of-way unless approved in writing by the land manager.

Spoil placement.

L-5 The top surface of spoils are to be made level to provide a possible site for the planting of trees.

Surface damage.

L-13P In order to minimize habitat and resource loss, work crews and support vehicles/equipment are confined to the immediate construction site at all times unless otherwise approved in writing by the land manager.

L-14P Permittee shall report in writing to the land manager unanticipated damages to waterflow regimes, vegetation, wildlife, and all other physical, biological, or chemical elements of the refuge. At the option of, and in a manner determined by, the land manager, the damages will be repaired to his satisfaction immediately following completion of the canal. All costs are to be borne by the permittee.

L-16P Permittee shall undertake measures, to the extent and in a manner determined by the land manager, to conserve resources and minimize turbidity/erosion problems.

Effects on wildlife.

L-15P Permittee shall not harass or disturb any wildlife during any phase of the construction. Should it appear necessary to alter a nest, bed, den, or home, all operations shall be halted until the land manager grants approval or provides for an acceptable alternative.

Map of operations.

L-17P Following the completion of the canal, the permittee shall provide an accurate map indicating locations and types of all land surface alterations that were realized during the operations.

Wellsite Preparation and Operation

General.

L-19P Prior to initiating any field work, permittee shall meet with the land manager and provide specifications of the operation including, but not limited to: (1) maps showing locations of wellsite and spoil disposal area, routes of access and travel, and equipment/materials storage areas; (2) information concerning sizes, types, and numbers of equipment to be used; and (3) a time schedule. The permittee shall agree to a reasonable adjustment of schedule or alignment of drilling site and spoil placement in order to minimize the disturbance of water flows, critical plant assemblages, unique natural areas, important wildlife areas, or other desirable ecological features. All activities are confined to those areas as finalized on the attached maps.

L-24P Permittee will have fire suppression and controlling equipment approved by the land manager on the site at all times. At signs of fire, permittee will expend manpower to extinguish blaze.

L-26P The right-of-way granted shall be for the specific use described and may not be construed to include the further right to authorize any other use within the right-of-way unless approved in writing by the land manager.

Spoil placement.

L-6 All spoil shall be contained within the spoil area.

Surface damage.

L-20P In order to minimize habitat and resource loss, work crews and support vehicles/equipment are confined to the immediate construction site at all times unless otherwise approved in writing by the land manager.

L-21P Permittee shall report in writing to the land manager unanticipated damages to waterflow regimes, vegetation, wildlife, and all other physical, biological, or chemical elements of the refuge. At the option of, and in a manner determined by, the land manager, the damages will be repaired to his satisfaction immediately following completion of the wellsite. All costs are to be borne by the permittee.

L-23P Permittee shall undertake measures, to the extent and in a manner determined by the land manager, to conserve resources and minimize turbidity/erosion problems.

Effects on wildlife.

L-22P Permittee shall not harass or disturb any wildlife during any phase of the activities. Should it appear necessary to alter a nest, bed, den, or home, all operations shall be halted until the land manager grants approval or provides for an acceptable alternative.

Map of operations.

L-25 Following the completion of the wellsite construction, the permittee shall provide an accurate map indicating locations and types of all land surface alterations that were realized during the operations.

Installation and Maintenance of Lines

Facility planning.

L-27 Prior to commencement of any field work, permittee shall meet with the land manager and provide specifications of the operation including, but not limited to: (1) maps showing locations of levee alignment, natural drainages, and all plug locations; (2) information concerning sizes, types, and numbers of equipment to be used; and (3) a time schedule. The permittee shall agree to a reasonable alignment adjustment in order to minimize the disturbance to existing levees.

L-9M Upon completion of pipeline installation or levee construction, the permittee shall furnish the land manager an accurate survey of the pipeline and any remaining levees "as-built," including typical cross sectioning, distance between canal bank and levee toe, levee height, levee base width, and any other information specifically required.

General agreements.

L-10M The permittee is responsible for correcting any problems, such as levee failure, levee surface erosion, line leakage, or levee subsidence, identified by the land manager, which result from

the pipeline or its construction. In addition, the permittee shall take immediate remedial action in emergency situations.

L-31P Following completion of the project, the land manager may conduct an on-site inspection to verify that restoration or mitigation of any environmental damages has been satisfactorily completed and may, at that time, require additional conservation measures necessary to satisfy permit requirments.

L-12M In the control of vegetation on levees and spoil banks, no herbicide or pesticide shall be used without first obtaining permission in writing from the land manager as to type of chemical to be used and the rate, method, and time of application.

L-13 The USFWS retains the right to use the right-of-way for the planting of wildlife food and cover crops, provided the same shall not endanger the pipeline.

Construction right-of-way.

L-14 The canal is to be centered on the 33-m (100-ft) right-of-way being 16.4 m (50 ft) on each side of the centerline. (Necessary widths range from 1 to 100 m (3 to 300 ft) and depend on the line type, land-use objectives and other site-specific variables.)

Vehicle access and movement.

L-16 Ingress to and egress from the pipeline shall be limited to the right-of-way for the pipeline and existing canals and waterways unless otherwise authorized by the refuge manager.

L-17 All equipment movement along the construction right-of-way be kept to a minimum. Marsh buggies shall not make collection trips along the line to pick up personnel. On completion of a day's work, this equipment shall go directly to the canal bank and be parked against the toe of the levee not on top of the levee. Boats shall collect crews along the canal banks for trips out of the marsh.

Line depth below surface.

L-18 The top of the pipeline shall be placed not less than 76 cm (30 inches) below the present surface of the land.

Line placement.

L-20M Unless otherwise specified by the land manager, all flow lines following a levee must be placed on the surface. Line location may be either on top or at the toe of the levee, as directed by the land manager.

L-32P Unless otherwise specified by the land manager, all surface flow-lines must be buried before crossing canals, bayous, ditches, or other watercourses. The surface line cannot approach any closer than (desired distance) meters to the bank.

L-28P To the greatest extent possible, new gas and oil pipelines will use existing pipeline easements to route the facility across refuge lands.

L-29P Unless site conditions are shown to be totally unsuitable, the "push-ditch" or "shove" method of pipeline installation shall be utilized.

Backfilling.

L-22M Unless otherwise authorized by the land manager, all levee breaks resulting from pipeline installation shall be completely back-filled with all available spoil removed during excavation operations such that final surface contours approach original site conditions as nearly as possible. In the event additional fill material is required to compensate for settlement, it shall be removed from scattered deep holes within the easement, rather than from continual surface cuts. The land manager may prefer to require that fill material be imported rather than extracted from marsh areas.

Plugs along banks for pipeline ditches.

L-32M All backfilled levee gaps that may be subject to water erosion from currents or waves are to be surfaced with a (desired depth) cm thick layer of shall, stone, or concrete riprap on both leveel slopes. The riprapped area shall extend (desired distance) meters laterally beyond the boundaries of the backfiled area. The permit-tee shall be responsible for the maintenance of this structure.

Placement and Operation of Production Facilities

Facility planning.

L-33P Prior to commencement of any field work, permittee shall meet with the land manager and provide specifications of the operation including, but not limited to: (1) maps showing locations of the complex and all interior components, access routes, and equipment storage areas; (2) information concerning sizes, types, and numbers of equipment to be used; and (3) a construction time schedule. The permittee shall agree to a reasonable siting adjustment in order to minimize the disturbance of critical plant assemblages, water flows, important wildlife areas, or other desirable ecological features. All activities shall be confined to those areas as finalized on the attached maps.

L-36P The permittee shall provide the land manager with a design which restricts the site size to the minimum area required to conduct processing operations, store equipment and supplies, and contain waste materials. The site shall not exceed 5,000 m^2 (1.25 acres) unless otherwise authorized by the land manager.

L-43P All existing primary drainage patterns within the production complex shall be maintained uninterrupted by the use of conduit, culverts, or other applicable techniques as specified and authorized by the land manager.

Restoration.

L-37P Upon completion of any oil and gas activity which no longer requires the use of an existing processing site, the permittee shall, unless otherwise authorized by the land manager, remove the production facilities and restore the entire easement to its original preconstruction condition or better as specified by the land manager. Restoration measures shall include, but are not limited to: reestablishment of former surface contours, restoration of soil structure, fertilization, revegetation with native flora, restoration of former drainage patterns, and removal of excess fill materials from the refuge.

L-38P Following removal of production facilities, the land manager may conduct an on-site inspection to verify that restoration or mitigation of any environmental damages has been satisfactorily completed and may, at that time, require additional conservation measures necessary to satisfy permit requirements.

General.

L-39P In the control of vegetation within the production complex and the tank battery facility, no herbicide or toxicant shall be used without first obtaining written permission from the land manager as to the type of chemical to be used and the rate, method, and time of application.

L-40P All treatment and processing equipment used by the permittee that could cause oil, gas, or field brine pollution or contamination, such as pumps, valves, hoses, hose connections, tanks, and pipelines, must be maintained and repaired so as to prevent leakage or waste. Any inevitable waste in proximity to the source must be confined so as to prevent escape that might otherwise occur as a result of rains, high water, or natural drainage.

L-42P Utilization and disposal as fill material of or waste solid materials resulting from production processes or treatment equipment, such as oil-contaminated sand, brine sediments, chemical precipitates, or other filtrable solids, is prohibited.

L-44P The permittee shall take such measures to prevent soil erosion from starting within the easement as the land manager may prescribe and shall take such other conservation measures, including restoration of disturbed ground surfaces, mulching, and revegetation, that may be requested by the land manager.

L-45P Permittee will have fire suppression and control equipment approved by the land manager on the site at all times. At signs of fire, permittee will expend manpower to extinguish blaze.

L-34 The permittee shall construct such dikes and retaining levees around the storage facilities as may be necessary to prevent flow of oil, water, or other leakage from the premises onto the adjoining refuge land.

Spills and Cleanup

Contingency plan.

L-46P The permittee shall file an "accidental spill" contingency plan with the land manager prior to initiating well-drilling, pipeline, or production facility operations. The plan shall outline, but is not limited to, proposed procedures to report, contain, and clean up all types of oil/brine spills in terrestrial systems, as well as proposed reclamation measures for site restoration.

General.

L-47P All spills or accidental discharges of oil field brine, or other petrochemical substances of greater than (quantity) liters shall be reported to the land manager within 24 hr.

L-48P Containment and cleanup of an accidental spill shall be conducted as soon as possible following its discovery, unless otherwise specified by the land manager.

Methods and techniques.

L-49P In the control of spilled oil or oil-field substances, no dispersants, emulsifiers, or other chemical agents shall be used without first obtaining permission in writing from the land manager as to the type or kind of chemical to be used and the rate, time, and method of application.

L-50P In the event of an accidental spill or discharge of oil, brine, or any other petrochemical substance, the permittee shall excavate and remove contaminated soils and replace such soils with soils of the same type and horizon, unless otherwise specified by the land manager.

Restoration.

L-51P Following the cleanup phase of a brine or oil spill, the permittee shall, unless otherwise authorized by the land manager, restore the affected area to its original preaccident or better condition as specified by the land manager. Restoration measures shall include, but are not restricted to: reestablishment of former surface contours, restoration of soil structure, fertilization, revegetation with native flora, restoration of former drainage patterns, and replacement of topsoils.

Site Shutdown and Restoration

Shutdown.

L-52P In the event all or a portion of the facilities are removed from the refuge as the result of the termination of operations or for other reasons, the permittee shall completely remove all poured concrete foundations and walls, asphalt surfaces, compacted shell and concrete pads, or other impervious surfaces, unless otherwise specified by the land manager.

L-57P In the event all or a portion of the facilities are removed from the refuge as a result of the termination of operations or for other reasons and as an integral part of pipeline easement restoration, the permittee shall grade and level the surface contours to as near the original conditions as possible, reestablish original surface drainage patterns, reseed the disturbed surface with grasses or other vegetation, and remove imported or excess fill materials from the refuge as specified by the land manager.

L-35 In the event subject well is a dry hole, the canal serving same will be dammed or pass bank plugged, and the dam or plug will be maintained by the permittee.

Restoration.

L-37M The permittee shall take such measures to prevent soil erosion from starting within the (type of) site as the land manager may prescribe and shall take such other conservation measures, including bulkheading, plowing of disturbed ground surfaces, weed control, and the revegetation of the rights-of-way with native plants, as may be requested by the land manager.

L-53P Upon completion of exploratory drilling, gas and oil production, pipeline repair, and oil and brine spill cleanup, the permittee shall excavate and dispose of soils contaminated with brine, oil, drilling mud, or other deleterious substances and shall replace such soils with uncontaminated soils of similar type and fertility.

L-54P Site soil restoration shall include the discing, plowing, or fragmentation of all compacted soil surfaces to a depth of not less than (desired dept) cm.

L-56P Site soil restoration shall include mulching and fertilizing; the type, rate of application, and number of applications shall be as specified by the land manager.

L-55P In the installation of buried pipelines and major flowlines, the permittee shall, whenever possible, strip, separately store, and, when line installation and burial are completed, replace the topsoil uniformly to its original position in the soil profile.

L-58P Following completion of restoration procedures, the land manager may conduct an on-site inspection to verify that restoration or mitigation of any environmental damages has been satisfactorily

completed and may, at that time, require additional conservation measures necessary to satisfy permit requirements.

L-59P The permittee shall dispose of all vegetative and other materials cut, uprooted, or otherwise accumulated during construction and maintenance activities by shredding, grinding, or chipping and incorporating the cuttings as mulch into disturbed soils, as may be specified by the land manager.

L-60P Prior to initiating any extensive restoration field work, the permittee shall meet with the land manager and provide specifications of the operation including, but not limited to: (1) maps showing features to be restored, points of alterations, and access routes; (2) information concerning sizes, types, and numbers of equipment to be used; and (3) a time schedule. The permittee shall agree to reasonable modifications in order to minimize the disturbance of desirable water flows, wildlife concentrations, or other desirable ecological features. All activities shall be confined to those areas as finalized on the attached maps.

L-61P The permittee shall revegetate all restoration areas with native plant species as may be specified by the land manager; such native materials may include trees, shrubs, grasses, and herbs. The use of exotic plant species must be authorized by the land manager.

L-62P As specified by the land manager, restoration procedures may require the construction of nesting platforms, denning sites, or other wildlife habitat improvements, such as food planting, to replace natural features lost or altered by permittee activities.

REFERENCES

Adams, D.A. 1963. Factors influencing vascular plant zonation in the North Carolina salt marshes. Ecology. 44:445-455.

Adkins, G., and P. Bowman. 1976. A study of the fauna in dredged canals of coastal Louisiana. La. Wildl. Fish. Comm. Tech. Bull. 18. 72 pp.

Ahlgren, I.F., and C.E. Ahlgren. 1960. Ecological effects of forests fires. Bot. Rev. 26(4):483-533.

Allan, P.F. 1950. Ecological basis for land use planning in Gulf coast marshlands. J. Soil Water Conserv. 5:57-62.

Allen, R.P. 1952. The whooping crane. National Audubon Society, Res. Rep. 3, New York. 246 pp.

American Petroleum Institute. 1960. Subsurface saltwater disposal. American Petroleum Institute, Division of Production, Dallas. 102 pp.

American Petroleum Institute. 1962. Primer of oil and gas development. American Petroleum Institute, Washington, D.C. 79 pp.

American Petroleum Institute. 1972. Petroleum seminar, Bureau of Sport Fisheries and Wildlife. American Petroleum Institute Petroleum Seminar, 19 September. 1972. 34 pp.

American Petroleum Institute. 1974. API recommended onshore production operating practices for protection of the environment, API RP 51, 1st ed. American Petroleum Institute, Division of Production, Dallas. 14 pp.

American Petroleum Institute. 1975. API recommended land drilling operating practices for protection of the environment, API RP 52, 1st ed. American Petroleum Institute, Division of Production, Dallas. 9 pp.

American Society of Civil Engineers, Task Committee on Pipeline Location of the Committee on Pipeline Location of the Pipeline Division of the American Society of Civil Engineers. 1965. Report on pipeline location. American Society of Civil Engineers, New York. 74 pp.

Au, Shu-fun. 1974. Vegetation and ecological processes on Shackleford Bank, North Carolina. Nat. Park Serv. Sci. Monogr. Ser. 6. 86 pp.

Babcock, K.M. 1967. The influence of water depth and salinity on wiregrass and saltmarsh grass. Master's thesis. Louisiana State Univ., Baton Rouge. 109 pp.

Bahr, L.M., Jr., J. Day, Jr., T. Gayle, J. Gosselink, C. Hopkinson, D. Smith, and D. Stellar. 1977. A conceptual model of the Chenier Plain Coastal ecosystem of Texas and Louisiana. Center for Wetland Resources, Louisiana State Univ., Baton Rouge, and Energy Resources Corp., Cambridge, Mass. 115 pp.

Ball, M.W. 1939. This fascinating oil business. Bobbs-Merrill Company, New York. 444 pp.

Bayley, S., and H.T. Odum. 1976. Simulation of interrelations of the Everglades, marsh, peat, fire, water, and phosphorus. Ecol. Model. 2(3):169-188.

Belaire, C.E., and E.F. Alexander. 1976. A study of the placement of materials dredged from Texas ports and waterways. Vol. I. Report to the General Land Office of Texas. Espey, Huston and Associates, Austin. 384 pp.

Bellis, V., and E. Proffitt. 1976. Maritime forest. Pages 22-28 in Alden, R., D. Brower, B. Copeland, D. Frankenberg, and F. Parker, eds. Ecological determinants of Carolina State Univ., Raleigh.

Bernard, H.A., and R.J. LeBlanc. 1965. Resume of the quaternary geology of the northwestern Gulf of Mexico province. Pages 137-185 in Wright, Jr., H.E. Frey, and D.G. Frey, eds. The Quaternary of the United States.

Blakey, H.L. 1947. The role of brush control in habitat improvement on the Aransas National Wildlife Refuge. Trans. N. Am. Wildl. Conf. 12:179-185.

Blum, J.L. 1968. Salt marsh Spartina and associated algae. Ecol. Monogr. 38:199-222.

Bordeau, P. 1954. Oak seedling ecology determining segregation of species in piedmont oak-hickory forests. Ecol. Monogr. 24(3):297-320.

Bourdeau, P.F., and H.J. Oosting. 1959. The maritime live oak forest in North Carolina. Ecology 40(1):148-152.

Bourn, W.S., and C. Cottam. 1950. Some biological effects of ditching tidewater marshes. U.S. Fish Wildl. Serv. Res. Rep. 19. 30 pp.

Box, T.W. 1964. Habitat changes following brush control practices in south Texas. Trans. N. Am. Wild. Conf. 29:432-438.

Box, T.W., J. Powell, and D.L. Drawe. 1967. Influence of fire on south Texas chaparral communities. Ecology 48(6):955-961.

Boyce, S.G. 1954. The salt spray community. Ecol. Monogr. 24:29-67.

Bragg, T.B., and L.C. Hulbert. 1976. Woody plant invasion of unburned Kansas bluestem prairie. Range Manage. 29(1):19-24.

Brown, L.F., Jr., R.A. Morton, J.H. McGowen, C.W. Kreitler, and W.L. Fisher. 1974. Natural hazards of the Texas coastal zone. Bureau of Economic Geology, Univ. Texas, Austin. 20 pp.

Brupbacher, R.H., et al. 1973. The coastal marshlands of Louisiana: chemical properties of the soil materials. Louisiana State Univ. Agric. Exp. Stn. Bull. 672. 34 pp.

Buckman, H.O., and N.C. Brady. 1969. The nature and properties of soils. MacMillan Co., New York. 653 pp.

Chabreck, R.H. 1968. The relation of cattle and cattle grazing to marsh wildlife and plants in Louisiana. Proc. 22nd Annu. Conf. S.E. Assoc. Game Fish Comm. 22:55-58.

Chabreck, R.H. 1971a. The foods and feeding habits of alligators from fresh and saline environments in Louisiana. Proc. 25th Annu. Conf. S.E. Assoc. Game Fish Comm. 25:117-124.

Chabreck, R.H. 1971b. Ponds and lakes of the Louisiana coastal marshes and their value to fish and wildlife. Proc. 25th Annu. Conf. S.E. Assoc. Game Fish Comm. 25:206-215.

Chabreck, R.H. 1972. Vegetation, water, and soil characteristics of the Louisiana coastal region. Louisiana State Univ. Bull. 664, Baton Rouge. 72 pp.

Chabreck, R.H., and A.W. Palmisano. 1973. The effects of hurricane Camille on the marshes of the Mississippi River Delta. Ecology 54(5):1118-1123.

Chapman, V.J. 1960. Salt marshes and salt deserts of the world. Interscience, New York. 392 pp.

Clark, H.L., and R.L. Juve. 1962. Effects of saline water from hurricane "Audrey" on soils. Agron. J. 54:390-392.

Clements, F.E., J.E. Weaver, and H.C. Hanson. 1929. Plant competition: an analysis of community functions. Carnegie Institution of Washington. 340 pp.

Cody, J.B. 1975. Vegetation management on power line rights-of-way: a state of the knowledge report. Applied Forestry Research Institute Res. Rep. 28. State Univ. of New York, Syracuse. 29 pp.

Collins, A.G. 1967. Geochemistry of some Tertiary and Cretaceous age oil-bearing formation waters. Environ. Sci. Tech. 1(9):725-730.

Conner, W.H., J.H. Stone, L.M. Bahr, V.R. Bennett, J.W. Day, Jr., and R.E. Turner. 1976. Oil and gas use characterization, impacts, and guidelines. Sea Grant Publ. LSU-T-76-006. Louisiana State Univ., Baton Rouge. 148 pp.

Cooper, A.W., and E.D. Waits. 1973. Vegetation types in an irregularly flooded salt marsh on the North Carolina outer banks. J. Elisha Mitchell Sci. Soc. 89:78-91.

Copeland, B.J., and F. Dickens. 1974. Systems resulting from dredging spoil. Pages 151-167 in H.T. Odum, B.J. Copeland, and E.A. McMahan, eds. Coastal ecological systems of the United States, Vol. 3. The Conservation Foundation, Washington.

Corliss, J., and L. Trent. 1971. Comparison of phytoplankton production between natural and altered areas in West Bay, Texas. Fish. Bull. 69(4):829-832.

Cottam, C., and W.S. Bourn. 1952. Coastal marshes adversely affected by drainage and drought. Trans. N. Am. Wildl. Conf. 17:414-420.

Council on Environmental Quality. 1974. OCS oil and gas - an environmental assessment. Report to the President by the Council on Environmental Quality, April 1974. 381 pp.

Daiber, F.C. 1974. Salt marsh plants and future coastal salt marshes in relation to animals. Pages 475-508 in Reimold, R., ed. Ecology of halophytes. Academic Press, New York.

Dale, E.E., Jr. 1975. Environmental evaluation report on various completed channel improvement projects in eastern Arkansas. Water Resources Research Center. Publ. 30. Univ. Arkansas. 42 pp. plates.

Dallas Morning News. 1976-1977. Texas Almanac.

Darnell, R.M. 1961. Trophic spectrum of an estuarine community based on studies of Lake Pontchartrain, Louisiana. Ecology 42(3):553-568.

Darnell, R.M. 1967. Organic detritus in relation to the estuarine ecosystem. Pages 376-382 in G.H. Lauff, ed. Estuarines. American Assoc. Adv. Sci. publ. 83 pp.

Darnell, R.M. 1976. Impacts of construction activities in wetlands of the United States. Ecological Research Series, EPA-600/3-76-045. Environmental Research Laboratory, Office of Research and Development, U.S. Environmental Protection Agency, Corvallis, Oregon. 392 pp.

Daubenmire, R., 1968. Ecology of fire in grasslands. Pages 209-266 in J.B. Cragg, ed. Advances in ecological Research, No. 5. Academic Press, New York.

Davis, D. 1973. Louisiana canals and their influence on wetland development. Ph.D. diss. Louisiana State Univ., Baton Rouge. 199 pp.

Davis, L.E., and C. Cyrus. 1947. Oil pipeline transportation practices. The University of Texas Division of Extension, Industrial and Business Extension Training Bureau, Austin. 410 pp.

Davis, W.B. 1976. The mammals of Texas. Texas Parks and Wildlife Department, Bull. 41. Austin. 294 pp.

Day, J.W., Jr., W.G. Smith, P.R. Wagner, and W.C. Stowe. 1973. Community structure and carbon budget of a salt marsh and shallow bay estuarine system in Louisiana. Sea Grant Publ. LSU-SG-72-04. 79 pp.

Dee, N., J.K. Baker, N.L. Drobney, K.M. Duke, and D.C. Fahringer. 1972. Planning methodology for water quality management: environmental evaluation system. Final Report to the Bureau of Reclamation. Battelle Memorial Institute, Battelle-Columbus Laboratory, Columbus, Ohio. 188 pp.

De Laune,R.D., W.H. Patrick, Jr., and J.M. Brannon. 1976. Nutrient transformations in Louisiana salt marsh soils. Sea Grant Publ. LSU-SG-76-009. 38 pp.

Dickert, T.G., and K.R. Domeny, eds 1974. Environmental impact assessment: guidelines and commentary. University Extension, Univ. California at Berkeley. 238 pp.

Duke, R., and R.H. Chabreck. 1975. Waterfowl habitat in lakes of the Atchafalaya Basin, Louisiana. Proc. S.E. Assoc. Game Fish Comm. 29:501-509.

Edminster, F.C. 1954. American game birds of field and forest. Castle Books, New York. 490 pp.

Eleuterius, L.N. 1971. Recent changes in the Louisiana marsh near Vermilion Bay. Gulf Res. Rep. 3(2):259-263.

Ellison, L. 1960. Influence of grazing on plant succession of rangelands. Bot. Rev. 26(1):1-78.

Ellisor, J.E., and W.F. Harwell. 1969. Mobility and home range of collared peccary in southern Texas. J. Wildl. Manage. 33(2):425-427.

Ensminger, A.B. 1963. Construction of levees for impoundments in Louisiana marshes. Proc. 17th Annu. Conf. S.E. Assoc. Game Fish Comm. 17:9 pp.

Ensminger, A.B., and L.G. Nichols. 1957. Hurricane damage to Rockefeller Refuge. Proc. 17th Annu. Conf. S.E. Assoc. Game Fish Comm. 17:52-56.

Evers, R.H. 1972. Mixed media filtration of oily wastewaters. Pages 5-12 in Society of Petroleum Engineers of AIME, Symposium on the Handling of Oilfield Waters. Paper Number SPE 4216. Preprints of papers presented December 4-5, 1972, Los Angeles.

Fahnestock, G.R. 1973. Use of fire in managing forest vegetation. Trans. Am. Soc. Agric. Engineers 16(3):410-413.

Fisher, W.L., L.F. Brown, Jr., J.H. McGowen, and C.G. Groat. 1973. Environmental geologic atlas of the Texas coastal zone - Beaumont-Port Arthur area. Bureau of Economic Geology, Univ. Texas, Austin. 93 pp. + maps.

Fisher, W.L., J.H. McGowen, L.F. Brown, Jr., and C.G. Groat. 1972. Environmental geologic atlas of the Texas coastal zone - Galveston-Houston area. Bureau of Economic Geology, UT, Austin. 91 pp. + maps.

Fisk, H.N., and E. McFarlan, Jr. 1955. Late Quaternary deltaic deposits of the Mississippi River. Pages 279-302 in Poldervaart, A., ed. The crust of the Earth. Geol. Soc. Am., Spec. Pap. 62.

Fowells, H.A., ed. 1965. Silvics of forest trees of the United States. Pages 584-587 in U.S. Dep. Agric., Forest Service Agriculture Handbook 271.

Gagliano, S. 1973. Canals, dredging, and land reclamation in the Louisiana coastal zone. Hydrologic and geologic studies of coastal Louisiana, Rep. 14. Center for Wetland Resources, Louisiana State Univ., Baton Rouge. 104 pp.

Gagliano, S., P. Light, and R. Becker. 1971. Controlled diversions in the Mississippi River delta system: an approach to environmental management. In Hydrologic and geologic studies of coastal Louisiana, Rep. 8. Center for Wetland Resources, Louisiana State Univ., Baton Rouge. 134 pp.

Gagliano, S., P. Light, R. Muller, and M. Al-Awady. 1970. Water balance in Louisiana estuaries. Hydrologic and geologic studies of coastal Louisiana, Rep. 3. Center for Wetland Resources, Louisiana State Univ., Baton Rouge. 177 pp.

Gould, F. 1969. Texas Plants: A checklist and ecological summary. Tex. Agric. Exp. Stn. MP-585. 121 pp.

Gusey, W.F., and Z.D. Maturgo. 1972. Petroleum production and fish and wildlife resources, the Gulf of Mexico. Environmental Affairs, Shell Oil Company, Houston. 187 pp.

Halloran, A. 1943. Management of deer and cattle on the Aransas National Wildlife Refuge, Texas. J. Wildl. Manage. 7(2):203-216.

Hansen, D., P. Dayanandan, P. Kaufman, and J. Brotherson. 1976. Ecological adaptations of salt marsh grass, Distichlis spicata (Gramineae), and environmental factors affecting its growth and distribution. Am. J. Bot. 63(5):635-650.

Harris, L.M. 1972. An introduction to deepwater floating drilling operations. Petroleum Publishing Co., Tulsa, Oklahoma. 272 pp.

Hellier, T.R., Jr., and L.S. Kornicker. 1962. Effect of hydraulic dredging on sedimentation. Publ. Inst. Mar. Sci., Univ. Texas. 8:212-215.

Hemingway, R.W. 1971. The law of oil and gas. Hornbook Series, West Publishing Co., St. Paul, Minnesota. 486 pp.

Henderson, G.A., and P. Harcombe. 1976. Net primary productivity of the Chambers County marshes. In Rowe, P. (project director), Environmental Analysis for Development Planning in Chambers County, Texas. 7:139-151.

Hess, T., R. Chabreck, and T. Joanen. 1975. The establishment and management of Scirpus olneyi under controlled water levels and salinities. Proc. 29th Annu. Conf. S.E. Assoc. Game Fish Comm. 29:548-554.

Hinde, H. 1954. The vertical distribution of salt marsh phanerogams in relation to tide levels. Ecol. Monogr. 24(2):209-225.

Hoffpauir, C. 1961. Methods of measuring and determining the effects of marsh fires, Proc. 15th Annu. Conf. S.E. Assoc. Game Fish Comm. 15:142-161.

Industrial and Business Training Bureau. 1951. A primer of oil and gas development, 1st ed. the Univ. of Texas, Division of Extension, Austin. 90 pp.

Jemison, E.S. 1966. Sabine National Wildlife Refuge annual narrative report - 1965 (annual refuge report). Sabine National Wildlife Refuge, Hackberry, Louisiana.

Joanen, T. 1969. Nesting ecology of alligators in Louisiana. Proc. 23rd Annu. Conf. S.E. Assoc. Game Fish Comm. 23:141-151.

Joanen, T., and L. McNease. 1970. A telemetric study of the nesting female alligators of Rockefeller Refuge, Louisiana. Proc. 24th Annu. Conf. S.E. Assoc. Game Fish Comm. 24:175-193.

Johnson, A., H. Hillestad, S. Shanholtzer, and G. Shanholtzer. 1974. An ecological survey of the coastal region of Georgia. Nat. Park Serv. Sci. Monogr. Ser. 3. 233 pp.

Johnston, M.C. 1955. Vegetation of the eolian plain and associated coastal features of southern Texas. Ph.D. diss. Univ. Texas, Austin. 167 pp.

Johnston, M.C. 1963. Past and present grasslands of south Texas and northeastern Mexico. Ecology 44:456-465.

Jones, F.B. 1975. Flora of the Texas Coastal Bend. Welder Wildlife Foundation Contribution B-6. Mission Press, Corpus Christi, Texas. 262 pp.

Jones, P.H., A.N. Turcan, Jr., and H.E. Skititzke. 1954. Geology and groundwater resources of southwestern Louisiana. Louisiana Dep. of Conservation, Louisiana Geological Survey, Geol. Bull. 30. 285 pp + 36 plates.

Kash, D.E., and I.L. White. 1973. Energy under the oceans: a technology assessment of outer continental shelf oil and gas operations. University of Oklahoma Press, Norman. 378 pp.

Keefe, C.W. 1972. Marsh production: a summary of the literature. Contrib. Mar. Sci. 16:163-181.

Kerwin, J., and R. Pedigo. 1971. Synecology of a Virginia salt marsh. Chesapeake Sci. 12(3):125-130.

Lambert, J. 1964. The Spartina story. Nature 204:1136-1138.

Lay, D., and T. O'Neil. 1942. Muskrats on the Texas coast. J. Wildl. Manage. 6(4):301-311.

Lehmann, V. 1941. Attwater's prairie chicken: its life history and management. U.S. Dep. Interior, U.S. Fish Wildl. Serv., North American Fauna. 57:63.

Lehmann, V. 1965. Fire in the range of Attwater's prairie chicken. Proc. 4th Annu. Tall Timbers Fire Ecol. Conf. 4:3-19.

Lindall, W.N., Jr., J.R. Hall, and C.H. Saloman. 1973. Fishes, macroinvertebrates, and hydrological conditions of upland canals in Tampa Bay, Florida. Fish. Bull. 71(1):155-163.

Leopold, L.B., F.E. Clark, B.B. Hanshaw, and J.R. Bolsley. 1971. Evaluating environmental impacts. U.S. Geological Survey. Washington, D.C. Geol. Circ. 645. 13 pp.

Lynch, J. 1941. The place of burning in management of the Gulf coast wildlife refuges. J. Wildl. Manage 5(4):454-457.

Lynch, J., T. O'Neil, and D. Lay. 1947. Management significance of damage by geese and muskrats of Gulf coast marshes. J. Wildl. Manage. 11(1):50-76.

McGinnis, J., R. Ewing, C. Willingham, S. Rogers, D. Douglass, and D. Morrison. 1972. Final report on environmental aspects of gas pipeline operations in the Louisiana coastal marshes. Final Report to Offshore Pipeline Committee, Battelle-Columbus Laboratory, Columbus, Ohio. 96 pp.

McGowen, J., C. Proctor, Jr., L.F. Brown, Jr., T. Evans, W. Fisher, and C. Groat. 1976. Environmental geologic atlas of the Texas coastal zone Port Lavaca area. Bureau of Economic Geology, Univ. Texas, Austin. 107 pp. + maps.

McNease, L., and L. Glasgow. 1970. Experimental treatments for the control of wiregrass and saltmarsh grass in a brackish marsh. Proc. 24th Annu. Conf. S.E. Assoc. Game Fish Comm. 24:127-145.

McNulty, F. 1966. The whooping crane - the bird that defies extinction. E.P. Dutton & Co., Inc., New York. 160 pp.

Mackin, J.G. 1971. A Study of the effect of oil field brine effluents on biotic communities in Texas estuaries. Texas A&M Research Foundation, Project 735, Texas A&M Univ., College Station. 73 pp.

Marks, P., and P. Harcombe. 1975. Community diversity of coastal plain forests in southern east Texas. Ecology 56(4):1004-1008.

Marmer, H. 1954. Tides and sea level in the Gulf of Mexico. In Gulf of Mexico, its origin, waters, and marine life. Fish. Bull. 89:101-118.

Martin, A., H. Zim, and A. Nelson. 1951. American wildlife and plants: a guide to wildlife food habits. McGraw-Hill Book Company, New York. 500 pp.

Meeks, R. 1969. The effects of drawdown date on wetland plant succession. J. Wildl. Manage. 33(4):817-821.

Mitsch, W. 1976. Ecosystem modeling of water hyacinth management in Lake Alice, Florida. Ecol. Model. 2(1):69-89.

Monte, J. 1975. Man-induced vegetation change in the Bayou Lafourche Basin, Louisiana: vegetational succession on spoil banks. Ph.D. diss. Louisiana State Univ., Baton Rouge.

Moore, J.L., D.E. Manty, P.B. Cheney, and J.L. Rhuman. 1973. A methodology for evaluating manufacturing environmental impact statements for Delaware's coastal zone. Battelle-Columbus Laboratory, Columbus, Ohio. 55 pp.

Morgan, J.P. 1972. Impact of subsidence and erosion on Louisiana coastal marshes and estuaries. Pages 217-233 in Chabreck, R., ed. Proc. Coastal Marsh and Estuary Management Symposium. Louisiana State Univ., Center for Wetland Resources, Baton Rouge.

Nettleton, L.L. 1940. Geophysical prospecting for oil. McGraw-Hill Book Company, Inc., New York. 444 pp.

Nichols, L.G. 1959. Rockefeller Refuge levee study. Unpublished manuscript.

Odum, E. 1969. The strategy of ecosystem development. Science. 164:262-270.

Odum, E. 1971. Fundamentals of ecology. W.B. Saunders Company, Philadelphia. 574. pp.

Odum, H.T. 1967. Biological circuits and the marine systems of Texas. Pages 99-157 in Olson, T.A., and F.J. Burgess, eds. Pollution and marine ecology. Interscience Publishers, New York.

Odum, H.T. 1971. Environment, power, and society. John Wiley and Sons, Inc., New York. 331 pp.

Odum, H.T. 1972a. An energy circuit language for ecological and social systems: its physical basis. Pages 140-211 in Patten, B.C., ed. System analysis and simulation in ecology, vol. 2. Academic Press, New York.

Odum, H.T. 1972b. Use of energy diagrams for environmental impact statements. Pages 197-213 in Tools for coastal zone management. Marine Technology Society, Washington, D.C.

Oil and Gas Journal. 1964. Dinoseis field tests point to better records at less cost. Oil and Gas J. 62(21):126-130.

O'Neil, T. 1949. The muskrat in Louisiana coastal marshes. Louisiana Department of Wildlife and Fisheries, New Orleans. 152 pp.

Oosting, H. 1954. Ecological processes and vegetation of the maritime strand in the southeastern United States. Bot. Rev. 20:226-262.

Oosting, H. 1956. The study of plant communities. W.H. Freeman & Company, San Francisco. 440 pp.

Oosting, H., and W. Billings. 1942. Factors effecting vegetational zonation on coastal dunes. Ecology 23:131-142.

Palmisano, A. 1970. Plant community-soil relationships in Louisiana coastal marshes. Ph.D. diss. Louisiana State Univ., Baton Rouge. 93 pp.

Palmisano, A. 1971. The effect of salinity on the germination and growth of plants important to wildlife in the Gulf coast marshes. Proc. 25th Annu. Conf. S.E. Assoc. Game Fish Comm. 25:215-223.

Palmisano, A. 1972. The distribution and abundance of muskrats (Ondatra zibethicus) in relation to vegetative types in Louisiana coastal marshes. Proc. 26th Annu. Conf. S.E. Assoc. Game Fish Comm. 25:160-177.

Palmisano, A., and J. Newsom. 1968. Ecological factors affecting occurrence of Scirpus olneyi and Scirpus robustus in the Louisiana coastal marshes. Proc. 21st Annu. Conf. S.E. Assoc. Game Fish Comm. 21:161-172.

Penfound, W. 1952. Southern swamps and marshes. Bot. Rev. 18:413-446.

Penfound, W., and E. Hathaway. 1938. Plant communities in the marshlands of southeastern Louisiana. Ecol. Monogr. 8:1-56.

Petroleum Extension Service. 1970. A primer of oilwell drilling, 3rd ed. Petroleum Extension Service, Univ. Texas, Austin. 95 pp.

Petroleum Extension Service. 1972. A primer of pipe line construction. Petroleum Extension Service, The University of Texas Division of Extension, Austin. 69 pp.

Redfield, A. 1972. Development of a New England salt marsh. Ecol. Monogr. 42:201-227.

Redman, F., and W. Patrick. 1965. Effect of sumbergence on several biological and chemical soil properties. La. Agric. Exp. Stn., Bull. 592. 28 pp.

Rice Center for Community Design and Research. 1974. Environmental analysis for development planning, Chambers County, Texas. Technical report, volume 1 appendices, an approach to natural environmental analysis. Rice University, Houston. 531 pp.

Rice Center for Community Design and Research. 1976. Texas Gulf coast program research rep. Rice University, Houston. 262 pp.

Robertson, J. 1953. ABC's of oil. Petroleum Publishers, Evansville, Indiana. 86 pp.

Robnett, J.J., Jr. (no date). Geophysical operations in the coastal zone. Humble Oil and Refining Company. 11 pp.

Rossa, W., and R. Chabreck. 1972. Factors affecting the growth and survival of natural and planted stands of Scirpus olneyi. Proc. 26th Annu. Conf. S.E. Assoc. Game Fish Comm. 26:178-188.

Russell, R.J. 1936. Physiography of lower Mississippi River delta. Pages 3-199 in Lower Mississippi River Delta - reports on the geology of Plaquemines and St. Bernard Parishes, vol. 8. Louisiana Dep. Conservation, Geological Survey, New Orleans.

Sandeen, W.M., and J.B. Wesselman. 1969. Ground water resources of Brazoria County, Texas. Open File Report., U.S. Geol. Survey.

Seadock, Inc. 1974. Environmental report - Texas offshore crude oil unloading facility. Vol. 1 of 3 vols.

Shell Oil Company. (no date). The story of petroleum. Shell Oil Company, Houston. 33 pp.

Shell Oil Company. 1965. How an oil field grows. Shell Oil Company, Houston. 17 pp.

Shiflet, T. 1963. Major ecological factors controlling plant communities in Louisiana marshes. J. Range Manage. 16:231-325.

Smith, E. 1970. Evaluation of a leveed Louisiana marsh. N. Am. Wildl. Conf. 35:265-275.

Smith, R. 1966. Ecology and field biology. Harper and Row, New York. 686 pp.

Smith, W.G. 1970. Spartina 'die-back' in Louisiana marshlands. Coastal Studies Bulletin. Special Sea Grant Issue. 5:89-96.

Smith, W., and J. Monte. 1975. Marshes - the wet grasslands. In Geoscience and Man. School of Geoscience, Louisiana State Univ. 10:27-38.

Sorenson, J.C. 1971. A framework for identification and control of resource degradation and conflict in the multiple use of the coastal zone. Department of Landscape Architecture, College of Environmental Design, Univ. California, Berkeley. 31 pp + 3 fold-out matrices.

St. Amant, L.S. 1971. Impacts of oil on the Gulf coast. Trans. 36th N. Am. Wildl. Nat. Res. Conf. 36:206-219.

Spindler, M., and R. Noble. 1974. Fall vegetation on the spoil banks of superior canal, Cameron Parish, Louisiana. Louisiana Academy of Sciences. 37:74-88.

Springer, M. 1975. Food habits of wild hogs on the Texas Gulf coast. Unpublished MS thesis. Texas A&M Univ. 67 pp.

Spurr, S. 1964. Forest ecology. Ronald Press Company, New York. 352 pp.

Teal, J. 1962. Energy flow in the salt marsh ecosystem of Georgia. Ecology 43:614-624.

Teal, J., and J. Kanwisher. 1966. Gas transport in the marsh grass Spartina alterniflora. J. Exp. Bot. (17):355-361.

Transcontinental Gas Pipeline Corporation. 1975. Map of Texas Gulf coast and Texas continental shelf showing natural gas pipelines. Transcontinental Gas Pipeline Company, Houston.

Trent, W.L., E.J. Pullen, and D. Moore. 1972. Waterfront housing developments: their effect on the ecology of a Texas estuarine area. Page 411-417 in M. Ruiro, ed. Marine pollution and sea life. Fishing News (Books) Ltd., London.

True, M.A., R.S. True, and A.M. Landry. 1977. Environmental assessment - Mesquite Bay Project, Aransas Bay, Texas. Report by Mitchell Energy Offshore Corporation, Houston. 56 pp.

Tusneem, M., and W. Patrick. 1971. Nitrogen transformations in waterlogged soil. La. Agric. Exp. Stn. Bull. 657:1-75.

U.S. Department of Agriculature. 1973. Established soil series (frequently updated compilation of county soil surveys). Soil Conservation Service, Ft. Worth, Texas.

U.S. Department of Agriculture. 1975. Utilities. Vol 2, chap. 2 in National forest landscape management, U.S. Dep. Agric., Forest Service, Agriculture Handbook 478. 147 pp.

U.S. Department of Agriculture. 1976. General soil map: Aransas and San Patricio Counties, Texas. Soil Conservation Service, Fort Worth, Texas. 1 p.

U.S. Department of Commerce. 1971. Local climatological data, Galveston, Texas - annual summary with comparative data. Natl. Oceanic Atmosp. Adm., Environmental Data Service, Asheville, North Carolina. 1 p.

U.S. Department of Commerce. 1973. Annual wind distribution by Pasquill stability classes, Galveston, Texas. Natl. Oceanic Atmosp. Adm., Environmental Data Service, National Weather Records Center, Asheville, North Carolina. 1 p.

U.S. Department of the Interior. 1975. Draft environmental statement: operation of the National Wildlife Refuge System. U.S. Fish and Wildlife Service. 8 chapters + appendix.

U.S. Department of the Interior. 1976a. National Wildlife Refuge System, wildlife use report (waterfowl only) FY-76. Aransas Refuge. U.S. Fish and Wildlife Service. Computer printout.

U.S. Department of the Interior. 1976b. National Wildlife Refuge System, wildlife use report (waterfowl only). FY-76. Brazoria Refuge. U.S. Fish and Wildlife Service. Computer printout.

U.S. Department of the Interior. 1976c. National Wildlife Refuge System, wildlife use report (waterfowl only). FY-76. San Bernard Refuge. U.S. Fish and Wildlife Service. Computer printout.

Valentine, J. 1962. Vegetation changes on the Sabine National Wildlife Refuge. Rep. prepared for Bureau of Sport Fisheries and Wildlife, Lafayette, Louisiana. 40 pp.

Valentine, J. 1969. Grazing on the Delta Refuge. Final Rep., Delta-1. Refuge files. 34 pp.

Valentine, J. 1970. Biological reconnaissance - Delta Refuge. Delta Refuge files. 3 pp.

Van Dyck, P. 1963. Sabine National Wildlife Refuge master plan. Prepared for the U.S. Fish and Wildlife Service, Bureau of Sport Fisheries and Wildlife, Region 4. 101 pp.

Vogl, R. 1973. Effects of fire on the plants and animals of a Florida wetland. Am. Midl. Nat. 89:334-347.

Walker, L., and G. Collier. 1969. Geography of the Southern Forest Region. Stephen F. Austin State Univ. Bull. 18. Nacogdoches, Texas. 68 pp.

Weaver, J. 1954. North American Prairie. Johnsen Publishing Company, Lincoln. Nebraska. 348 pp.

Wells, B. 1928. Plant communities of the coastal plain of North Carolina and their successional relations. Ecology 9:230-242.

Wells, B., and I. Shunk. 1931. The vegetation and habitat factors of the coarser sands of the North Carolina coastal plain: an ecological study. Ecol. Monogr. 1(4):465-520.

White, M. 1973. The whitetail deer of the Aransas National Wildlife Refuge. Tex. J. Sci. 24(4):457-489.

Wiebe, W. 1971. Perspectives in microbial ecology. Pages 484-497 in Odum, E.P., ed. Fundamentals of ecology, 3rd ed. W.B. Saunders Company, Philadelphia.

Williamson, J.M. 1959. Gulf coast Cenozoic history. Trans. Gulf Coast Assoc. Soc. 9:15-29.

Willingham, C., B. Carnaby, and D. Engstorm. 1975. Final report on a study of selected coastal zone ecosystems in the Gulf of Mexico in relation to Gas pipelining activities. Battelle-Columbus Laboratories, Columbus, Ohio. 230 pp.

Appendix A

ACTIVITIES ASSOCIATED WITH OIL AND GAS EXPLORATION AND PRODUCTION

I. Preexploration
- A. Broad area reconnaisance
  - 1. Gravity methods
  - 2. Magnetometer
  - 3. Natural oil seep inspection
  - 4. Electric log correlations over long distances
  - 5. Aerial photographs
- B. Site-specific surveys
  - 1. Seismic surveys
    - a. Land methods
      - 1) Explosive charge (1-2 km/day)
        - a) Surveyor entry and staking
        - b) Clearing of vegetation for roadway
        - c) Vehicle entry
          - (1) Drilling truck
          - (2) Clearing of vegetation for roadway
          - (3) Measuring van
        - d) Drilling of shot tubes and tube placement
        - e) Placement of charges, seismometers, and cable
        - f) Shooting
        - g) Retrieval of seismometers
        - h) Retrieval of shot tubes
        - i) Clean up of area
        - j) Ancillary problems - trash, oil drainage, poaching
        - k) Vehicle exit
      - 2) Thumper, Dinoseis (1-2 km/day)
        - a) Surveyor entry and staking
        - b) Clearing of vegetation for roadway
        - c) Vehicle entry
          - (1) Supply truck
          - (2) Measuring van
          - (3) Thumper truck
        - d) Placement of seismometers and cables
        - e) Thumper strikes earth
        - f) Retrieval of seismometers and cables
        - g) Cleanup of area
        - h) Ancillary problems - trash, oil drainage, poaching
        - i) Equipment exit
    - b. Water methods (recording methods: 2-6 km/hr)
      - 1) Sparkers
        - a) Vehicle entry to boat launch (if necessary)
        - b) Clear vegetation or dig out area for vessel launching (if necessary)
        - c) Launch vessel (if necessary)
        - d) Set navigation beacons
        - e) Vessel movement to and from shore
        - f) Seismic activity and recording on vessel
        - g) Retrieval of vessel
        - h) Cleanup of area
        - i) Equipment exit
  - 2. Propane - oxygen gun - see steps I.B.1.b.1.a to I.B.1.b.1.i
  - 3) Vibroesis - see steps I.B.1.b.1.a to I.B.1.b.1.i
  - 4) Air guns - see steps I.B.1.b.1.a to I.B.1.b.1.i

5) Coring (1-2 cores/hr)
   a) Vessel entry - see steps I.B.1.b.1.a to I.B.1.b.1.e
   b) Take cores from bottom
   c) Vessel exit - see steps I.B.1.b.1.g to I.B.1.b.1.i

II. Exploration
A. Access to site
1. Upland or marsh site
a. Survey access road and location site (1-2 days)
   1) Surveyor entry
   2) Vegetation clearing for survey
   3) Stake or marker placement
b. Preparation of access road and turnarounds
   1) Build or strengthen turnoff from main road into lease site (1-2 days)
      a) Set conduit in ditch parallel to main road
      b) Fill area above and around conduit with road fill - use fill or fill plus binder
      c) Tamp or pack fill and level from roadway to other side of ditch.
   2) Build gate or modify existing gate - cattle guard (1-2 days)
   3) Build road to site
      a) Using borrow parallel to road site - upland soils
         (1) Move in dragline and dozer or bucket loader
         (2) Move in contractor's buildings, porta-cans, fuel
         (3) Dragline digs material
         (4) Dozer moves and shapes roadway fill
         (5) Conduit placement in low spots
         (6) Pack layers of fill
         (7) Possible placement of surface material
         (8) Remove equipment
         (9) Continual policing of grounds for trash, waste

(Upland - 1-2 km/day)

      or b) Using borrow parallel to road site - marsh soil
         (1) Move in equipment
         (2) Move in small buildings
         (3) Dragline digs material
         (4) Time for drainage and drying
         (5) Dozer shapes and moves fill or
            (5a) Placement of boards over road fill
            (5b) Placement of boards
            (5c) Placement of 30 cm river sand
            (5d) Placement of 15 cm shell
         (6) Placement of synthetic cover
         (7) Trucks enter and exit with planks for roadway
         (8) Placement and layering of planks on synthetic material
         (9) Conduit placement in low spots of land, or drive piles into soil, build wooden bridge
         (10) fill spots which cave in with shell or coarse material
         (11) Remove equipment

(Marsh - 0.1 to 0.5 km/day)

(12) Continual policing of grounds for trash, waste

or c) Bringing fill from outside area to upland site

(Upland - 1-2 km/day)

(1) Move in equipment -dozer
(2) Move in small buildings
(3) Trucks enter and exit with fill - continuous stream of vehicles
(4) Dozer moves and shapes material
(5) Place conduit in low spots
(6) Possible placement of surface material
(7) Remove equipment
(8) Continual policing of grounds for trash, waste

2. Marine site
   a. Survey canal and slip location (1-2 days)
      1. Surveyor entry - truck, marsh buggy
      2. Stake or marker placement while traversing route
      3. Return of vehicles to exit
   b. Dredge entrance (1-2 days)
      1. Access of barge-mounted dragline or small suction dredge and auxiliary vessels (supply boats, tow boat) from Intracoastal Waterway or existing canals
      2. Dredge to edge of marsh or land area
      3. Place spoil on land, submerged next to entry channel, or on existing sites
   c. Dredge to wellsite
      1. Locate and mark spoil disposal sites
      2. Possible placement of spoil containment structures
      3. Commence dredging operation
      4. Daily movement of supply - service vessels
      5. Place spoil in designated areas
         a. Continuous levees
         b. Distinct mounds
         c. Broadcast over large area
         d. Barge for dewatering and transport
      6. Management of wastes - machines, human - turbidity control
      7. Stabilization of mounds or levees

(Hydraulic dredger - 75-300 m/day)

(Bucket dredger - 40-200 m/day)

(Channel 21 m wide, 3 m deep)

   d. Dredge wellsite location (1-2 days) - see II.B
   e. Placement of any waterflow control structures, i.e. locks, rubber dams, booms, etc.
   f. Remove dredge and auxiliary vessel.

B. Site preparation
   1. Land drilling operation
      a. Upland sites - pad
         1) Survey location site - see step II.A.1.a (1-2 days)
         2) Prepare site for surfacing (5-7 days)
            a) Move in dozer, equipment
            b) Clear vegetation and dispose
            c) Grade off topsoil - remove or place elsewhere
            d) Grade and fill site to plan specs
            e) Haul in (or out) material for grading and filling
            f) Possible compaction of material

g) Possible excavation of cellar
h) Possible excavation of reserve pit and/or water storage pit - placement of fill as ring levee
i) Possible lining of pit with impermeable material, depending on soil characteristics
j) Placement of timber mats for rig placement

3) Surface site (2 days)
a) Haul in shell or gravel
b) Level

or b. Marsh sites - pad
1) Survey location site - see step II.A.1.a (1-2 days)
2) Prepare surface work area (10-14 days)
a) Move in dragline
b) Possibly strip off surface vegetation/soil from borrow pits and ring levee area - store temporarily
c) Possibly put in temporary waterflow barrier (in sediment) at outside of ring levee area
d) Form ring levee by placement of fill from borrow areas
e) Possibly place surface vegetation at base of ring levee outside at least to improve erosion control
f) Dig sump with backhoe just inside ring levee
g) Provide sump-pump for water seepage
h) Trucks haul in boards for placement on marsh surface (2-3 layers)
i) Placement of boards
j) Possible excavation of mud pit, placement of fill as ring levee
k) Possible lining of pit depending on soil

2. Marine locations
a. Survey slip location - see step II.A.2.a
b. Dredge moves to site
c. Steps II.A.2.c.1 to II.A.2.c.7

C. Auxiliary services to wellsite
1. Water well drilling (4-7 days)
a. Drill truck entrance
b. Set up of equipment
c. Placement of supplies for drilling
d. Shallow water drilling operation
e. Disposal of drill tailings
f. Setting of well-pipe and pump to water table
g. Possible water storage tank placement
h. Surface pipe placement from well to site
i. Removal of drilling equipment

or 2. Placement of surface waterlines
a. Placement of pipe alongside of roadway or on leveed road
b. Removal of vehicles

3. Sanitary facility preparation
a. Placement of structure
b. Holding tank placement
c. Possible digging of shallow septic field

4. Placement of electric power and/or telephone lines (4-7 days)

a. Placement of poles, or
b. Placement of conduit
c. Pulling or hanging wire

5. Possible placement of surface or shallow natural gas lines (4-7 days)
   a. Equipment entry
   b. Clearing of line route
   c. Ditch if necessary or use plow
   d. Placement of pipe on land surface between wellhead and location site, fill if necessary, or pass tractor over plowhole
   e. Excavation under road or placement over ditches, streams, etc.

D. Equipment placement
1. Nonmarine sites
   a. Repair, strengthening, or shoring up roadway at any time associated with vehicular traffic
      1) Upland roads (2-5 days)
         a) Filling of potholes and resurfacing
         b) Excavation and replacement of broken conduit
      2) Marsh-fill roads (2-5 days)
         a) Filling holes with shell
         b) Replacement of boards
         c) Possible application of shell over boards
   b. Entry of vehicles with equipment and supplies (4-5 days)
      1) Portable rig
      2) Power plants and power train
      3) Drill pipe
      4) Well casing, conductor pipe
      5) Settling and sump pits (steel), pumps, shaker tables, dry mud, hopper
      6) Miscellaneous tanks, storage sheds
      7) Trailers for crew, driller, mud services
      8) Blowout preventer
2. Marine sites (2-3 days)
   a. Enter rig on barge pushed by tow vessel
   b. Pump ballast water into barge to sink to bottom
   c. Drive spuds, or pile keyway to hold barge in place
   d. Enter supply vessels, barges with pipe and casing, and mud barges - frequent boat traffic

E. Drilling the well (30-90 days)
1. Vehicle movement
   a. Crew change every 8 hr
   b. Supply vehicles
   c. Service vehicles - vacuum trucks, logging vehicles, cementing trucks, perforator truck, acid trucks, high pressure pump trucks
2. Air quality maintenance
   a. Air drilling
      1) Liquid scrubbers, sprinklers at blooey line discharge
      2) Enlarge or make pits remote
   b. Gas drilling
      1) Liquid scrubbers, sprinkler at blooey line discharge

2) Ignite gas
3) Enlarge pits
4) Move so remote from well-site

c. Foam drilling
1) Enlarge pits or add tanks
2) Evaporate liquid, or
3) Haul to disposal site

3. Noise abatement - power plants-mufflers
4. Solid waste disposal - nondrilling solids
a. Trash
b. Broken, spent equipment and containers
5. Liquid waste
a. Sanitary facilities - nondrilling liquids
1) Maintenance of sewage facilities or septic field
2) Maintenance and hauling away of chemically treated wastes

b. Waste disposal from machinery
1) Oil from engines
2) Radiator fluids

c. Excess water management
1) Seepage from marsh area into ring levee
a) Skim oil from surface
b) Pump sump into adjacent marsh
2) Rainwater or wash water
a) Skim oil from surface
b) Pump to another area or truck to disposal site

6. Drilling solids
a. Tailings
1) Place in reserve pit
2) If oil base mud:
(a) Clean and wash cuttings, place in reserve pit
(b) Remove wash fluid from site
(c) Place cuttings in containers and remove from site

b. Spent equipment
7. Drilling liquids
a. Continuous activities with muds
1) Maintain reserve pit levee
2) Open containers and mix various materials used in muds - oil, bentonite, tannin, caustic soda, cornstarch, redwood fiber, wood fiber, lime, corn, acid, phosphate, clays, sawdust, cottonseed hulls, barite.
3) Circulate mud, pump into well, return to shaker table, back to settling tank and sump
4) Pump excess liquids or materials of improper type to reserve pit.
5) Neutralize or remove toxic materials from reserve pit
6) Skim floating oil off surface with vacuum truck and remove from site

b. Pulling drill pipe
1) Catch mud in drill pipe as pipe is disconnected, return to settling pond by buckets
2) Clean up rig floor after a trip - see II.E.5.c.2

F. Shutdown of drilling facilities

1. Successful well - assume Christmas tree standing (10-14 days)
   - a. Nonmarine sites
     - 1) Upland roads
       - a) Fill potholes
       - b) Shore up weak areas
     - (or) 2) Marsh-fill roads
       - a) Fill holes with shell
       - b) Replace broken boards
     - 3) Vehicle and equipment removal - see steps II.D.1.b
     - 4) Fill cellar
     - 5) Fill burn pit
     - 6) Fill mousehole, rathole
     - 7) Dispose of drilling mud
       - (a) Spread over ground, dry, plow or disc under
       - (b) Bury fluid
       - (c) Remove and haul away
       - (d) Allow to dry in pit
     - 8) If water storage and reserve pits lined, remove lining and haul away
     - 9) Haul away tailings that cannot be buried
     - 10) Fill in water storage pit and reserve pit
     - 11) In marsh location remove board surface in well site except for area needed for production facilities
     - 12) Upland site, grade or level surface not used in production - plant native vegetation if necessary
   - b. Marine sites - assume Christmas tree standing (4-7 days)
     - 1) Check canal depth and deepen shallow spots
     - 2) Pump out barge with rig
     - 3) Remove drill pipe barges, casing barges, mud barges
     - 4) Remove floating rig
     - 5) Dispose of mud or use elsewhere
2. Unsuccessful well (10-14 days)
   - a. Nonmarine sites (assume capped below land surface)
     - 1) Steps II.F.1.a.1 - II.F.1.a.10 as necessary
     - 2) In marsh location
       - (a) Remove all boards from marsh surface
       - (b) Possibly knock down or open levee and refill borrow pits with levee material
     - 3) Upland - grade over entire pad surface, level and revegetate if necessary.
   - b. Marine sites - assume capped below land surface (7-10 days)
     - 1) Steps II.F.1.b.1 to II.F.1.b.5
     - 2) Remove pilings in keyway
     - 3) Possibly place semipermanent dike across canal (earthen, earth-piling, earth bulkhead)
       - (a) Enter dragline on barge
       - (b) Excavate material from levee, canal bottom or other spoil sites
       - (c) Dump into canal
       - (d) Drive piles and place retainer boards, or
       - (e) Drive metal retainers and piles.

III. Production phase

A. Production facility placement

1. Upland or diked marsh facility (1-2 km/day)

a. Placement of gathering lines

1) Survey route and place stakes
2) Clear vegetation over route
3) Enter vehicles for line placement - ditcher, tractor, plow, equipment trucks, flowline pipe trucks, backhoe.
4) Dig ditch or pull plow
5) Place pipe and fill ditch or run tractor over plow hole

b. Placement of treating equipment - freewater knockout tank; heater-treater; production and test separators; stock tanks; chemical tanks; filters; pumps; artificial lifts; skimmer tanks; dehydrators; compressor; salt water disposal tank, etc. (20-60 days)

1) Equipment entry
2) Dig out areas for concrete slabs to be laid
3) Grade, fill, and level as necessary
4) In the case of wet soil, drive piles and specially prepare ground for slab of large structures
5) Pour slab and set steel into concrete - pour retainer wall if necessary
6) Bring in prefabricated structures
7) Erect structures
8) Place fill around stock tanks, treaters, etc. to form levee
9) Prepare saltwater storage pit
   a) Dig out area and build levee around pit
   b) Line with sheeting or impervious clay if necessary
10) Place and connect all flow lines - see steps III.A.1.a.4 through III.A.1.a.5

c. Saltwater disposal facilities (7-14 days)

1) Gathering lines
   a) Surveyor entry
   b) Survey and stake
   c) Equipment entry
   d) Dig ditch or plow
   e) Lay gathering pipe, fill or run tractor over plow hole
2) Booster pump station
   a) Prepare saltwater receiving tank - see applicable steps III.A.1.b.1 to III.A.1.b.7 depending on size of the tank and pumps
3) Treatment facilities
   a) Place skimmer, aerator, chemical treater, sedimentation pit, injection pump, filter - see steps III.A.1.b.1 to III.A.1.b.7
4) String electric lines or gas lines to pumps
   ~~a) Electric lines - see step II.c.4~~
5) Preparation of disposal well
   a) New well (20-30 days)
      (1) Repair, strengthening roadway - see steps II.D.1.a

(2) Vehicle and equipment entry - see steps II.D.1.b
(3) Injection well drilling - see steps II.E.1, II.E.2.a, to II.E.7
(4) Drilling termination
(a) Equipment removal - see steps II.D.1.b
(b) Restore surface - see steps II.F.1.a.7 to II.F.1.a.12

b) Dry well or abandoned well (5-10 days)
(1) Repair, strengthen roadway - see steps II.D.1.a
(2) Vehicle and equipment entry - see steps II.D.1.b
(3) Removal and/or replacement of casing or some drilling - see steps II.E.1, II.E.2.a, to II.E.7
(4) Work termination
(a) Equipment removal - see steps II.D.1.b

2. Marine location
a. Placement of gathering lines (0.5 - 1 km/day)
1) Survey route and place markers
2) Clear vegetation over route
3) Enter vehicles for line placement - marsh buggy, draglines, pile driver, boats, plow
4) Drive piles for gathering line placement over to land or marsh
5) Canal crossing
a) Trench or plow approach to canal
b) Bury line below canal bottom
c) Fill trench
6) Remove equipment

b. Placement of treatment equipment - freewater knockout tank; heater-treater; production and test separators; stock tanks; chemical tanks; filters; pumps; artificial disposal tanks, etc. (5-10 days)
1) Barge-mounted equipment
a) Enter pile driver, other boats, dragline (if necessary)
b) Drive piles for stationing vessel
c) Pump ballast tanks full or anchor securely
d) Connect gathering lines from land areas
e) Equipment exit
2) Marine locations connected to land production facilities - see steps II.A.1.b for placement operations
3) Pile mounted production facilities (5-10 days)
a) Enter pile driver, other boats, equipment
b) Drive piles for production platform
c) If platform large, drive piles for foundation, bring in concrete forms and pur concrete piles
d) Build platform
e) Enter production equipment on barge
f) Place equipment in position
g) Connect gathering lines
h) Equipment exit

c. Saltwater disposal facilities (7-10 days)
   1) Gathering lines - see steps III.A.2.a
   2) Booster pump station - see steps III.A.1.b.1 to III.a.1.b.7 depending on size of tank and pumps
   3) Treatment facilities
      a) Land site - see steps III.A.1.c.3
      b) Water site - see steps III.A.2.b.3
   4) Electric lines or gas lines to pumps
      a) Electric lines - see step II.c.4
      b) Gas lines - see step III.A.2.a
   5) Preparation of disposal well
      a) Land disposal well location - see steps II.A.1.c.5
      b) Marine disposal well location
         (1) New well (10-30 days)
            (a) Floating rig placement - see steps II.D.2
            (b) Injection well drilling operations - see steps II.E.1, II.E.2.a, to II.E.7
            (c) Dry well or abandoned well - note: the operations here will vary greatly with circumstance of wellhead, casing, etc. and may range from no activity to steps III.A.2.c.5.b (0-10 days)

B. Operation of production facility - note: operations will be nearly identical for land and marine production facilities except that access will be by road for land operations and by boat or barge for some of the marine operations.
   1. Start-up production (5-10 days)
      a. Vehicle and/or equipment access
      b. Well completion - contain and dispose of materials from logging, recasing, cementing, perforation - see steps II.E.4, II.E.5
      c. Well treatment - contain and dispose of materials from acidizing, fracturing, chemical treatment, pumping, and testing - see steps II.E.4, II.E.5
   2. Continuous operation procedures (years to decades)
      a. Production equipment
         1) Frequent checking, inspection, and gauging - vehicle movement
         2) Periodic minor maintenance to equipment - vehicle movement
            a) Disposal of used or waste materials from production processors
               (1) Sand
               (2) Chemicals, salt
               (3) Solids (filter)
            b) Clean - maintain lines, valves, chokes, gauges
               (1) Replace defective equipment
               (2) Remove scale - dispose
         3) Site maintenance
            a) Mowing or herbicide control of vegetation
            b) Sandblasting, scraping, painting - disposal of wastes

b. Saltwater disposal
   1) Frequent checking - vehicle movement
   2) Skimming
      a) Filter replacement and disposal
      b) Skimmed oil collection and return to system
   3) Aeration - maintenance and repair or forced draft tower, blower, and pumps
   4) Chemical treatment - supply lime, coagulant, chlorine for treatment
   5) Sedimentation - removal and disposal of floc from coagulation
   6) Filtration
      a) Removal of clogged sand and disposal
      b) Occasional recharge of sand portion of filter
c. Spill and leak cleanup
   1) Bringing in absorbants, skimmers
   2) If large area removed from production facilities, burn off
   3) Repair faulty equipment
   4) Remove saturated sediments
   5) Bring in fill and replace dug out areas
   6) Revegetate or fertilize if necessary
d. Workover of well - swabbing, casing, replacement, sand removal from bore, scale cleaning, pump repair, deepening, plugging back, recementing, refracturing, reacidizing
   1) Rig placement - see steps II.D., II.E., II.F.1
e. Termination of production (7-14 days)
   1) Land areas
      a) Enter vehicles and equipment
      b) Remove all above-surface structures
      c) Truck to other locations
      d) Remove surface level equipment which will interfere with other surface uses of the land - powerlines, tanks, separators, treaters, etc.
         (1) Excavate around structure
         (2) Cut, blast, or remove to some level below ground
      e) Excavate wellhead below ground level, cap, and fill
      f) Grade and fill site to specifications
      g) Remove roadway to specifications
      h) Revegetate to specifications, if necessary
      i) Remove all vehicles, equipment
   2) Removal of barge or piling mounted production facilities
      a) Enter vessels, vehicles, equipment
      b) Remove structures if on piles
      c) Remove barges with production structures
      d) Remove piles
      e) Remove surface and shallow gathering lines
      f) Excavate well head below bottom level, cap, and fill
      g) Close off canal - see steps II.F.2.b.3
      h) Remove all vessels, vehicles, equipment

IV. Transportation

A. Construction

1. Pipeline

a. Upland areas (soils not waterlogged)

1) Surveying (2-10 km/day)

a) Survey crew entry to location

b) Minor vegetation clearing

c) Measuring and staking

d) Survey crew exit

2) Clearing (0.25-2 km/day)

a) Equipment entry - bulldozer, trucks, crew

b) Dozers clear vegetation along entire length, width of right of way

c) Vegetation stacked and burned

d) Dozers fill and grade surface

e) Surface prepared for vehicular traffic

(1) Additional fill

(2) Compaction

(3) Temporary board crossings constructed

(4) Surfacing material brought in and placed where needed

f) Build cattleguards, gates, and reroute fences

g) Equipment exit

3) Ditching (spread - Phases 3-10 - 0.25-3 km/day)

a) Equipment entry - ditcher, dozer, ripperbackhoe, dragline, trucks, compressed airdrills, roadboring machine

b) In areas with rocks in soil, ripper moves through

c) Backhoe and/or dragline removes dirt and rock and stacks in bank along one side of ditch

d) Ditcher excavates ditch, costs spoil to one side in bank

e) Tunnel under road, railroad, obstruction

(1) Boring machine transported to site

(2) Hole casing transported

(3) Boring machine supported by side-boom tractors puts hole beneath obstruction

f) Large rock or obstruction

(1) Dragline removes rocks, or

(2) Compressed air drill bores into rock or obstruction

(3) Explosive charge used to split rock, dragline, or backhoe removes

g) Ditch periodically pumped if water table is high or have high rains - pump to adjacent land areas

4) Pipe stringing

a) Trucks bring pipe to area adjacent to ditch

b) Unloaded by side boom tractors

c) Trucks exit site

5) Pipe bending

a) Side-boom tractors, bending shoes, and bending machines moved to spot where pipes will be bent

b) After bending, pipes may be moved to proper site by ditch by truck or side-boom tractor

6) Pipe welding
   a) End to be welded prepared
      (1) If end damaged it may be cut off and rebeveled
      (2) End cleaned by brushes and buffers - power supplies usually truck mounted
   b) Pipe lifted by side boom and aligned - clamps hold in place
   c) Stringer bead is welded - power supplies truck or tractor mounted
   d) Pipe set on skids after stringer bead made
   e) Side booms move down string to lift next pipe for alignment
   f) Weld area recleaned between each bead
   g) Welders apply 1 to 4 more beads
7) Welding inspection
   a) Welding inspection vehicle enters site
   b) X-ray source exposes film at weld junction
   c) Film developed on site - possible disposal of developing chemicals
   d) Welders return with equipment to repair weld faults
8) Pipe surface preparation
   a) Uncoated pipe
      (1) Pipe lifted by side boom
      (2) Cleaning and priming machine makes pass
      (3) Pipe may be set down again while enamel dries, picked up before wrapping machine approaches
      (4) Wrapping machine moves along pipe - tar, glass fibre, and tar paper
      (5) Supply vehicles accompany machines along pipe
      (6) Faults detected and repaired by hand
      (7) Pipe reset or moved over ditch
   b) Coated pipe
      (1) Joints coated with tar
      (2) Mastic applied
      (3) Supply vehicles stop at each pipe joint and mastic molds are mounted on side booms
9) Placement in ditch
   a) Bottom of ditch prepared - loose dirt bed
   b) Ditch pumped dry if necessary
   c) Pipe lifted over ditch and placed in ditch by side booms - many in a line
   d) Weights or fasteners placed on pipe if necessary
   e) For bored crossings
      (1) Pipe placed through casing
      (2) Pipe tied in by welding
      (3) Joint prepared as in IV.A.1.a.8.a.7, IV.A.1.a.8.a.4, or IV.A.1.a.8.b
10) Block values, bypass valves, and condensation traps
   a) Area excavated or enlarged as needed by dragline, backhoe
   b) Assembly moved in by truck
   c) Lowered into place by side boom

d) Pipe tied in by welding
e) Joints prepared as in IV.A.1.a.8.a.2, IV.A.1.a.8.a.4, or IV.A.1.a.8.b

11) Backfilling area
a) Side boom with Mormon board, dozer or dragline pulls material back to ditch
b) Excess material is placed in mound over ditch to compensate for settling and compaction

12) Cleanup
a) Area graded to natural contours by dozers
b) Debris is removed
c) In some cases topsoil may be replaced
(1) Soil trucked in
(2) Soil spread over area by tractor
d) Pipeline right of way may be fertilized and seeded
e) Exposed valve heads, vents, expansion joints
(1) Area where pipe is exposed may be fenced off
(2) Shell or concrete floor may be constructed in small fenced area

13) Cathode devices
a) Cathode box is placed near power line
b) Electrodes or ground bed anode material placed near pipe in ground
c) Anode line connected to electrodes
(1) Line ploughed into ground or surface connection

b. Moderately firm marsh soils - push method

1) Survey canal and slip for push barge (1-2 days)
d) Cathode line connected to pipeline (every 1.6-8 km)
(1) Line ploughed into ground or surface connection
a) Surveyor entry - truck, marsh buggies
b) Stake or marker placement while traversing route
c) Return of vehicles to exit

2) Dredged entrance to marsh (1-2 days)
a) Barge mounted dragline or suction dredge and auxiliary vessels enter from Intracoastal Waterway or existing canals
b) Dredge to edge of marsh
c) Place spoil on land, submerged next to access canal, or on existing disposal sites

3) Dredge to push site (40-300 m/day)
a) Locate and mark spoil disposal sites
b) Possible placement of spoil containment structures
c) Dredge out channel to push slip and slip itself
d) Place spoil in designated areas
(1) Continuous levee
(2) Distinct mounds
(3) Broadcast over large area
(4) Barge for dewatering and transport away
e) Stabilize mounds or levees
f) Push barge, auxiliary barges, pushed in by tug
g) Manage machine, human, and process wastes

4) Ditching (1-2 km/day)
   a) Equipment entry - dragline or clamshell dredge with runners or pads for moving across soft soil, marsh buggy with backhoe
   b) Equipment digs a ditch 1-2 m deep, 2-3 m wide
   c) Spoil is stacked in continuous pile next to ditch
   d) Equipment exits at end of line, returns along original path, or remains to backfill ditch
5) Pipe welding and pushing (all done from barge) - all activities IV.A.1.a.6 to IV.A.1.a.8 done at stations on push barge (0.25-1.5 km/day)
   a) Pipe positioned on line and welded (several welds)
   b) Welds are cleaned and series of coatings put on pipe
   c) Each new section pushed off end of barge, floats added
   d) A marsh buggy with boom is used to steer anterior end of pipe string (capped) - may push 11-24 km of pipe before sinking it or repositioning push barge
   e) Floats are released from pipe which sinks in ditch
   f) Floats are rafted along push canal and hauled back to push barge - buggy may return to barge
   g) Dragline or buggy mounted backhoe backfills the ditch
   h) Ditching or filling equipment exists or returns
6) Barge removed from site (1-2 days)
   a) All equipment placed on barges
   b) Barges removed from area by tug
   c) Canal and push slip may be plugged - see steps II.F.a.b.3
7) Cathode device placement - see steps IV.A.1.a.13

c. Completely waterlogged marsh soils - Flotation method
1) Survey canal - see steps IV.A.1.b.1 (1-5 km/day)
2) Dredge entrance to marsh - see steps IV.A.1.b.2 (1-2 days)
3) Dredge canal (200-300 m/day)
   a) Draglines dredge canal 12-15 m wide, 2-3 m deep
   b) A deeper area of canal 3-4 m may be dug for the pipe itself
   c) When crossing other pipelines a suction dredge is used to dig under other line
   d) Spoil is heaped in piles or piles withbreaks on both sides of canal, with 9-12 m berm - piles 1-2 m high, 15-26 m wide
4) Pipeline fabrication and lowering into ditch - all activities IV.A.1.a.6 to IV.A.1.a.8 done at stations on lay barge (0.25-1.5 km/day)
   a) Lay barge positioned in canal by tugs, spuds, anchors - note: usually barge-mounted crew quarters nearby.
   b) Pipe positioned on line and welded (several welds)
   c) Welds are cleaned and series of coatings put on pipe

d) As each new section is eardy to move into canal, tug and winches move lay barge ahead one pipe length over pipe ditch - note, no flotation devices

e) Backfilling usually not done due to draining and compaction of dredge spoil - some owners require backfilling with spoil from other locations

5) Barge and dredge removal from site, bulkheading

a) Barges removed from area by tug

b) Canal bulkheaded - see steps II.F.2.b.3

d. Open-water pipeline laying - bays (0.25-1.5 km/day)

1) Survey route

a) Boat placement of marker buoys

2) Lay barge moves to site by tug or self power

3) Pipeline fabrication and lowering - all activities IV.A.1.a.6 to IV.A.1.a.8 done at stations on lay barge

a) Pipe positioned on line and welded (several welds)

b) Welds cleaned, series of coatings placed on pipe

c) As each new section is ready to move into water, tug and winches move lay barge ahead

d) Dredging sled with hydraulic jets follows lay barge - jets loosen bottom material, pipe slips into hole

4) Barges reach end of line

e. River and stream crossings

1) Small, nonnavigable streams (2-3 days)

a) If stream narrow enough, pipe bent upward and crosses above water level

b) Narrow stream, pipe buried under bottom

(1) Dragline excavates at trench across stream

(2) Pipe is bent into shallow "U", welded and wrapped - see steps IV.A.1.a.5 to IV.A.1.a.8 - Pipe may have weights attached

(3) Pipe may be capped and floated or dragged across river

(4) Pipe positioned by cranes and lowered into ditch

(5) Pipe tied into other ends of pipe - see steps IV.A.1.a.8.a.2, IV.A.1.a.8.a.4, or IV.A.1.a.8.b

(6) Ditch may be filled with coarse gravel or materials which will not wash away with water movement

(7) Bulkhead constructed where pipe leaves land to channel - see steps II.F.2.b.3

c) Wide deep river or channel (10-14 days)

(1) Depending on depth, width, may use dragline on barge and spoil barge to excavate ditch - or may use hydraulic jet when pipe is set on bottom

(2) String of pipe long enough to span river is prepared - see steps IV.A.1.a.4 to IV.A.1.a.8

(3) Floats attached to pipe and whole string lifted (side booms) and pulled completely across river

(4) Floats removed, retrieved, and pipe string sinks to bottom
(5) If ditch cut in bottom, refilled with coarse fill
(6) If pipe laying on bottom, hydraulic jet displaced sediment allowing pipe to settle into bottom
(7) Tie into pipeline - see steps IV.A.1.a.8.a.2, IV.A.1.a.8.a.4, or IV.A.1.a.8.b

d) Wide shallow river (10-14 days)
(1) Draglines and/or backhoe enter river edge
(2) Fill and rubble is brought to site or dug from the bottom to form dam and diversion channels
(3) Pipe brought into dam, welded, wrapped, etc.
(4) Draglines excavate center of dam to working depth
(5) Pipeline placed in ditch by side booms, tied in - see steps IV.A.1.a.8.a.2, IV.A.1.a.8.a.4, or IV.A.1.a.8.b
(6) Ditch is filled to bottom level
(7) Earthen dam is extended toward opposite shore
(8) Equipment excavates earthen dam to original stream bottom depth where pipe has been laid
(9) Process repeated until whole river traversed
(10) Bulkheads constructed where pipe leaves land to channel - see steps II.F.2.b.3

2. Trunk station, compressor station, scraper trap and launcher sites
a. Survey access road and site and build road - see steps II.A.1 (1-2 days)
b. Prepare site (30-60 days)
1) Enter vehicles, equipment, contractors, trailers
2) Bring in fill material by truck
3) Place, spread, fill and grade area
4) Where necessary drive piles for foundation stabilization
5) Excavate where underground facilities will run
6) Tie into pipeline - see steps IV.A.1.a.8.a.2, IV.A.1.a.8.a.4, or IV.A.1.a.8.b
7) Pour slabs and set steel in concrete
8) Bring in fabricated structures
9) Erect structures
10) Bring in precision machinery and install
11) Hook up all parts of system and test
12) Test facility
13) Hook up communication equipment - see step II.c.4
14) Hook up cathodic equipment - see step IV.A.1.a.13
15) Remove all construction equipment

3. Test pipeline (2-14 days)
a. Charge line to pressures in particular sequence
b. Check for leaks by gauge pressure and visable signs - airplane checks

c. Repair leaks at faulty area
   1) Equipment entry - dragline, side boom, welding equipment
   2) Dragline uncovers spot
   3) Coating removed
   4) Reweld area
   5) X-ray inspect rewelds
   6) Coat pipe
   7) Backfill
   8) Equipment exit

B. Operation of pipeline (5-30 yr)
   1. Pump station
      a. Daily vehicle movement with shift changes
      b. Normal maintenance and operation allow minor leaks drips
      c. Scraper, balls, pigs result in waste which must be disposed of
      d. Management of human sanitation and trash
   2. Pipeline
      a. Leaks detectable by pressure drops, gas sniffers from airplanes, and large oily, wet areas seen from air
      b. Repair requires steps IV.A.3.c
      c. Periodic maintenance of cathode equipment
         1) Placement of new electrodes
         2) Periodic inspection of pipe - see steps IV.A.3.c

Appendix B

LIST OF COMMON AND SCIENTIFIC NAMES USED IN TEXT

Plants

Alternanthera philoxeroides	Alligatorweed
Baccharis halimifolia	Groundsel
Bacopa monnieri	Water hyssop
Batis maritima	Saltwort
Callicarpa americana	American beauty-berry
Ceratophyllum demersum	Coontail
Cladium jamaicense	Sawgrass
Cynodon dactylon	Bermuda grass
Cyperus spp.	Nutgrass
Distichlis spicata	Saltgrass
Echinochloa wateri	Wild millet
Eichornia crassipes	Water hyacinth
Ilex vomitoria	Yaupon
Iva frutescens	Marsh elder
Juncus roemerianus	Black needlerush
Lemna minor	Duckweed
Leptochloa fascicularis	Sprangletop
Lycium carolinianum	Salt matrimony-vine
Monanthochloe littoralis	Shore grass
Myrica cerifera	Wax myrtle
Myriophyllum spicatum	Eurasian watermilfoil
Najas guadalupensis	Southern naiad
Nymphaea odorata	White water-lily
Panicum dichotomiflorum	Panic grass
Panicum hemitomon	Maidencane
Panicum repens	Dogtooth grass
Panicum virgatum	Switch grass
Paspalum monostachyum	Gulfdune paspalum
Paspalum vaginatum	Jointgrass
Persea borbonia	Red bay
Phragmites communis	Roseau cane, common reed
Polygonum spp.	Smartweed
Potamogeton spp.	Pondweed
Quercus laurifolia	Laurel oak
Quercus marilandica	Blackjack oak
Quercus virginiana	Live oak
Ruppia maritima	Widgeon grass
Sagittaria falcata	Bulltongue
Sagittaria platyphylla	Delta duckpotato
Salicornia spp.	Glasswort
Salix nigra	Black willow
Schizachyrium scoparius	Little bluestem
Scirpus californicus	Bullwhip, Southern bulrush
Scirpus olneyi	Olney's threesquare
Scirpus robustus	Leafy threesquare
Sesbania exaltata	Coffee bean
Smilax spp.	Greenbriar
Spartina alterniflora	Smooth cordgrass
Spartina cynosuroides	Hogcane
Spartina patens	Marshhay cordgrass
Spartina spartinae	Gulf cordgrass
Spirodela polyrhiza	Duckweed

Plants (continued)

Typha latifolia	Cattail
Typha angustifolia	Cattail
Vaccinium arboreum	Sparkleberry
Vitis mustangensis	Mustard grape
Zizania aquatica	Wild rice

Invertebrates

Callinectes sapidus	Blue crab
Crassotrea virginica	Oyster
Peneaus spp.	Shrimp

Fish

Anchoa mitchilli	Bay anchovy
Cynoscion rebulosus	Speckled seatrout
Micropogon undulatus	Atlantic croaker
Paralichthys lethostigma	Southern flounder
Sciaenops ocellatus	Red fish

Reptiles

Alligator mississippiensis	Alligator

Mammals and Marsupials

Baiomys taylori	Pygmy mouse
Bassariscus astutus	Ringtail
Canis latrans	Coyote
Canis rufus	Red wolf
Dasypus novemcinctus	Armadillo
Didelphis marsupialis	Oppossum
Felis concolor	Mountain lion
Lutra canadensis	River otter
Lynx rufus	Bobcat
Mustela vison	Mink
Myocastor coypus	Nutria
Nasua narica	Coati
Odocoileus virginianus	White-tailed deer
Ondatra zibethica	Muskrat
Oryzomys palustris	Rice rat
Pecari tajacu	Javelina

Procyon lotor	Raccoon
Sciurus niger	Fox squirrel
Sigmodon hispidus	Hispid cotton rat
Sylvilagus aquaticus	Swamp rabbit
Sylvilagus floridanus	Cottontail
Sus scrofa	Feral swine
Taxidea taxus	Badger
Urocyon cinereoargenteus	Grey fox

Birds

Accipiter cooperii	Cooper's hawk
Agelaius phoeniceus	Red-winged blackbird
Ajaia ajaja	Roseate spoonbill
Anas acuta	Pintail
Anas crecca	Green-winged teal
Anas discors	Blue-winged teal
Anas fulvigula	Mottled duck
Anas platyrhynchos	Mallard
Anas strepera	Gadwall
Anser albifrons	White-fronted goose
Aythya americana	Redhead
Aythya valisineria	Canvasback
Branta canadensis	Canada goose
Bubo virginianus	Great horned owl
Buteo albicaudatus	White-tailed hawk
Buteo jamaicensis	Red-tailed hawk
Circus cyaneus	Marsh hawk
Chen hyperborea	Snow goose
Colinus virginianus	Bobwhite
Dendrocygna spp.	Whistling duck
Dichromanassa rufescens	Reddish egret
Falco peregrinus	Peregrine falcon
Fulica americana	American coot
Grus americana	Whooping crane
Mareca americana	American wigeon
Meleagris gallopavo	Turkey
Mycteria americana	Wood ibis
Pandion haliaetus	Osprey
Parus spp.	Titmouse, Chickadee
Parus carolinensis	Carolina chickadee
Parabuteo unicinctus	Harris' hawk
Pelecanus occidentalis	Brown pelican
Spatula clypeata	Northern shoveler
Sturnella magna	Eastern meadowlark
Tympanuchus spp.	Prairie chicken
Tympanuchus cupido attwateri	Attwater's prairie chicken
Vireo spp.	Vireo

GLOSSARY

Acidize - To treat oil-bearing limestone or carbonate formations with acid in order to increase production.

Aerator - An apparatus for intimately admixing water and air.

Aggradation - In geology, the natural filling up of the bed of a watercourse by deposition of sediment.

Allochthonous - A term applied to constituents which have been transported to their present location from their original generation site.

Anastomosis - The union of parts or branches (as of streams, blood vessels, or leaf veins) so as to intercommunicate.

Angiosperm - Any of a class of vascular plants having the seeds in a closed ovary.

Anode - The positive terminal of an electrolytic cell.

Annual windrose - A graphic device that shows average wind conditions over a long period of time for a particular location. The length of each of 8 (or 16) direction shafts is proportional to the percentage of time that the wind has been observed to blow from that part of the compass.

Annulus or Annular space - The space surrounding a cylindrical object within a cylinder. the space around a pipe suspended in a wellbore is often termed the annulus, and its outer wall may be either the wall of the bore hole or the casing.

Anthropogenic - Of, relating to, or influenced by the impact of man on nature.

Auger - A tool for boring holes in soil, consisting of a shank with a crosswise handle for turning, a central tapered screw, and a pair of cutting lips.

Balls - A collection or mass of sticky, consolidated material - usually shale drill cuttings - on drill pipe, drill collars, tool joints, etc. The condition frequently results from inadequate pump pressure or insufficient volume of drilling fluid.

Bead - A line of weld metal.

Benthos - Organisms that live on or in the bottom of bodies of water.

Berm - That area between the base of a levee or spoil bank and the water edge.

Biomass - The amount of living matter, usually expressed as a number (of germs, calories, etc.) per unit area.

Blooey line - The return line used in air - or gas-drilling techniques through which the gas, cuttings, and fluid are blown from the wellbore.

Blowout Preventer - Equipment installed at the well head for the purpose of controlling pressures in the annular space between the casing and drill pipe, or in an open hole during drilling and completion operations.

Booster pump - An auxiliary pump used to increase the force, power, or pressure of materials along a pipeline.

Bore hole - The wellbore; the hole made by drilling or boring a well.

Brine - Water containing salt that is found mixed with petroleum when the product comes out of the wellhead. The brine must be separated in order to sell the petroleum.

Bullet - A shaped charge fired electrically from the surface, which pierces the casing wall and cement to provide holes through which formation liquids may enter or drilling fluids may exit.

Burn pit - A leveed pit in which flammable hydrocarbon waste liquids or semi-solids can be disposed of by burning.

Cap - A fitting or structure that closes the end of the wellbore.

Casing - Steel pipe placed in an oil or gas well as drilling progresses. Casing prevents the wall of the hole from caving during drilling; it also provides a means of extracting the oil if the well is productive.

Cathode - The negative terminal of an electrolytic cell.

Cathodic protection - A process associated with pipelines where a slight positive electrical potential (relative to the soil) is placed on the pipe to overcome the natural reduction-oxidation potential of the soil. In the process, sacrificial anodes are placed parallel to the pipeline and potential is provided from a nearby transformer. The result is that the anodes slowly oxidize while the pipeline escapes the effects of electrolysis.

Cellar - An excavated area in the earth below the main work area on an oil rig. The cellar may contain the blowout preventer and casing. Cellars are rarely dug now since the main work area of the drilling rig is elevated and the blowout preventer is at ground level.

Chenier - An elongated, ridge-like, geologic formation, usually consisting of sand and silt with minor amounts of shell material, located in coastal areas. Cheniers exhibit a relief of about 1.5 m (5 ft), similar to beach ridges, but differ in that they form a radiating, chevron-like areal pattern.

Christmas tree - The assembly of valves, pipes, and fittings, usually high pressure, used to control flow of oil and gas from the casing head.

Circulating pit - A narrow channel dug into the earth or formed of steel that allows drilling mud to flow from the shaker table to the mud pumps where it is pumped down the drill tube to the drill bit.

Climax community - The set of plants and animals associated with the climax stage of succession in ecosystem. The organisms of the climax stage are a stable group that do not significantly change through time. The community is characterized by a wide diversity of species, complex food chains, and stable populations.

Corrosion - The complex chemical or electrochemical process by which metal is destroyed through reaction with its environment.

Crude - Unrefined petroleum.

Culm - The hollow stem of a grass; sometimes applied to sedges also.

Cuspate - A type of delta formation in which a single dominant mouth builds the delta forward into deeper water while wave action sweeps the sediment away from the mouth to form two curving beaches, concave toward the sea (tooth-shaped).

Cuttings - Fragments of rock dislodged by the bit and brought to the surface in the drilling mud.

Dehydrator - A low-temperature separating apparatus used for removing water vapor from a gas stream.

Dendritic - A drainage pattern developed after the manner of a branched tree or shrub; results from the absence of any systematic orientation of controlling structures within the substrate.

Detritus - Particles of plant matter in varying stages of decomposition.

Development drilling - The drilling of wells in an oil/gas field with proven development potential as opposed to exploration or "wildcat" drilling. Wells are placed and production undertaken to maximize yield for the field.

Diatom - Any of a class of minute planktonic unicellular or colonial algae with silicified skeletons that form diatomite, which is particularly useful as a light, friable filtering material.

Disclimax community - a relatively stable ecological community often including kinds of organisms foreign to the area and displacing the climax because of disturbances, especially by man.

Dragline - a track-mounted machine in which the bucket is attached by cables and operates by being drawn toward the machine.

Drainage - a process in which petroleum resources in a geologic formation in land controlled by one owner are depleted by the extraction of petroleum from the same formation in the adjacent land of another owner.

Drill bit - The cutting or boring element used in drilling oil and gas wells. Bits may be grouped into three broad categories: rotary bits, percussion bits, and combination rotary-percussion bits.

Drill string - a "string" or column of drill pipe.

Drilling rig - The derrick, drawworks, and attendant surface equipment of a drilling or workover unit.

Dry hole - An exploratory or development well found to be incapable of producing either oil or gas in sufficient quantities to justify completion as an oil or gas well.

Ecesis - The establishment of a plant or animal in a new habitat.

Ecotone - The transitional or border area between two adjacent ecological communities, usually exhibiting completition between organisms common to both.

Edaphic - Of or relating to the soil.

Edge effect - The result of the presence of two adjoining plant communities (as in an ecotone) on the numbers and kinds of animals present in the immediate vicinity.

Emulsion treater - A type of treatment apparatus used to separate oil and water mixtures using chemicals, heat, or both.

Endogenous - Growing from or on the inside.

Evapotranspiration - Loss of water both by evaporation and by transpiration from the plants growing thereon.

Exogenous - Originating from or due to external causes.

Exploration drilling - Well drilling in unproven territory.

Fetch - The distance along open water or land over which the wind blows.

Fish - Any object accidentally left in the wellbore during drilling or workover operations and which must be recovered before work can proceed.

Floating oil boom - A device that floats in water that is used to contain floating petroleum.

Flooding - A secondary recovery method that involves pumping water through a set of injector wells arranged around a producing well. The injected water drives the reservoir oil toward the wellbore where it is pumped out.

Flotation method - A pipe-laying technique that requires the use of a large floating barge to assemble, weld, and lay a pipeline through aquatic or semiaquatic environments. The lay barge moves along the entire right-of-way during the operation.

Forb - An herb other than grasses, sedges, or rushes.

Foule-Thompson effect - A phenomenon in which a gas under high pressure released into a lower pressure environment absorbs heat energy from the environment during expansion. In gas fields this effect may cause ice to form in gas lines, blocking flow or freezing valves.

Fracturing - A process by which fluid pressure at the bottom of a well is developed by high-pressure pumps to the extent necessary to counterbalance the weight of rock above it plus an additional pressure required for actually breaking (cracking) the formation. The purpose is to open native fractures to increase flow of the reservoir fluid into the wellbore.

Freewater knockout tank - A tank for separating free water from oil where the water and oil are not in an emulsion.

Freewater skimmer - A device to skim small amounts of oil floating on water that has been separated from petroleum in a production facility.

Gathering lines - Lines used to transport petroleum from the well to the treatment complex.

Gauger - An individual associated with production aspects who is responsible for measuring the amounts of oil in the tank batteries and performing other maintenance and operation activities.

Geomorphology - A science that deals with the land and submarine relief features of the earth's surface and seeks interpretations of their genesis.

Geophone - An instrument for detecting vibrations passing through rocks or soil.

Gravity-meter survey - A preexploration technique measuring gravitational fields which may be used to detect oil-bearing formations.

Heater-treater - A type of production equipment that uses heat to further separate oil and water emulsions.

Hopper - A large funnel through which solid materials may be passed and mixed with a liquid injected through a connection at the bottom of the hopper. It is used for such purposes as mixing cement slurry, mixing clay with oil or water to form a drilling fluid, and so on.

Humification - Formation of, or conversion into, humus.

Hydric forest - A forest type characterized by an abundance of moisture, such as a bottomland hardwood forest.

Hydrologic gradient - The difference in level of the water table between two points causing water to flow very slowly toward the lowest point within the groundwater body.

Hydroperiod - That time duration that water is present in the upper soil layers.

Injector well - A well used for the disposal of brine or produced water to subsurface formations. Water injection also increases oil recovery by forcing residual oil out of producing formations.

Isolation - The rate of delivery of direct solar energy per unit of horizontal surface.

Jetting barge - A barge having hydraulic pumps that can excavate a pipeline trench in bottom sediments by use of a high-pressure water jet.

Kelly - The heavy square or hexagonal steel member which is suspended from a swivel through the rotary table and connected to the drill pipe to turn the drill string. The kelly transmits torque from the rotary to the drill string, yet it allows limited vertical movement as the bit deepens the hole.

Keyway - A specially constructed slot at one end of a drilling barge through which the drilling takes place. This arrangement permits the drilling rig to be entirely contained on the barge.

Launcher - An entry port to a pipeline through which large balls, pigs, or scrapers can be put into the pipeline bore to separate liquids or to clean the inside of the pipe.

Lay barge - A special assembly barge used in the flotation method of pipeline installation to assemble, process, and install gas and oil pipe in aquatic areas.

Log - A systematic recording of data, as in driller's log, electrical log, radioactivity log.

Magnetometer survey - A survey (often by airplane) to detect differences in magnetic fields, which can indicate the presence of geologic formations characteristically associated with gas and oil deposits.

Mastic - Pipeline coating materials composed usually of coal tar or asphalt base materials. The primary purpose of this coating is to prevent water from coming into contact with the steel of the pipe and causing corrosion.

Meiofauna - A practical term relating to small benthic organisms. This group includes such things as nematodes, ostracods, small polychaetes and oligochaetes, amphipods, and harpacticoid copepods, but does not normally include the protozoa.

Micelles - A molecular aggregate that constitutes a colloidal particle.

Motte - An isolated group of trees or shrubs of variable areal extent, usually occurring in grassy savannahs or prairies.

Mouse hole - A hole drilled under the derrick floor and temporarily cased in which a length of drill pipe is temporarily suspended for later connection to the drill string.

Mud - The liquid that is circulated through the wellbore during rotary drilling and workover operations.

Pad - That portion of a well-drilling site that supports the drilling derrick and associated facilities.

Perched - Groundwater is said to be perched if it is separated from an underlying body of groundwater by unsaturated rock.

Perforation - The process of piercing the casing wall and cement in order that materials may be introduced into the annulus.

Petroleum fraction - One of several hydrocarbon portions separable by fractionation or other separation processes.

Phytoplankton - The passively floating or weakly swimming, usually minute, plant life of a body of water.

Pig - A Scraping tool forced through a flowline or pipeline to clean out wax or other deposits.

Pipeline spread - A spread for pipeline construction is the line of men and equipment involved in building a pipeline. The spread may extend several miles and move up to two miles per day along the route.

Polish - To treat and filter out deleterious substances from produced water before disposal.

Production rig - A small derrick and associated equipment usually mounted on a truck that can be easily moved over a producing well for routine maintenance of the well or for treatment activities.

Production tubing - Pipes placed within the casing and extending to various levels within the well, through which oil and gas flow to the surface.

Prograde - To build up sedimentary materials along a beach face due to the shoreward transport of sand caused by wave action.

Push method - A method of pipeline installation that involves assembling the pipe at a stationary point and then pushing the entire string of pipe along the right-of-way from the assembly point.

Raptors - Birds of prey, such as hawks, falcons, and owls.

Rat hole - A hole with casing that projects above the derrick floor, into which the kelly is placed when hoisting operations are in progress.

Rectifier station - A small electrical apparatus that transforms alternating current into direct current and simultaneously reduces the voltage to a point where it generates a potential just strong enough to protect the pipeline from the electrochemical characteristics of the soil.

Redox (also oxidation-reduction) - A chemical reaction in which one or more electrons are transferred from one atom or molecule to another. Corrosion of steel pipe or equipment is the result of an oxidation-reduction reaction of iron to form ferric oxide.

Reserve pit - A mud pit in which a reserve supply of drilling fluid is stored. The "reserve pit" is actually used as a waste pit.

Rhizome - A somewhat elongate usually horizontal subterranean plant stem that is often thickened by deposits of reserve food material, produces shoots above and roots below, and is distinguished from a true root in possessing buds, nodes, and usually scale-like leaves.

Round trip - To pull out, change bits, and subsequently run a complete string of drill pipe back into the hole.

Sacrificial anode - A piece of metal placed close to a steel pipe in the ground that, because of an electric or electrochemical potential, selectively undergoes oxidation by chemical reaction with the soil. The result is that the anode is oxidized rather than the pipe surface, thus protecting the pipeline from corrosion.

Scale - A hard incrustation usually rich in calcium sulfate that is deposited on the inside of a vessel or pipe in which water is heated or transported.

Scraper - A device used to clean deposits of paraffin from tubing or flowlines (see pig).

Scrubber - Any of a number of devices that physically or chemically purify a stream of gaseous materials flowing through them.

Separator - A type of treatment apparatus that separates well fluids into gases and liquids.

Seral stages - Any one of a series of ecological communities that succeed one another in the biotic development of an area.

Shaker holding pit - A pit that contains the cuttings removed from the circulating fluid stream by the shaker in rotary drilling operations.

Slash - An open tract in a forest strewn with logging debris; also, the debris (roots, branches, stumps, etc.) in such a tract.

Swale - A low-lying or depressed and often wet stretch of land.

Synergistic - Having the capacity to act such that the total effect is greater than the sum of the effects taken independently.

Vibroesis survey - A seismic technique using large "loudspeakers" with diaphrams pressed against the ground to produce the wave train (15 to 50 Hz) necessary for seismic measurement. The "loudspeakers" may be mounted on trucks or marsh buggies or carried by helicopter. The frequency range for most efficient seismic operation can be easily controlled by this system.

Xeric marsh - The higher, somewhat drier portions of a marsh which receive only infrequent water influxes.

50272-101

REPORT DOCUMENTATION PAGE	1. REPORT NO. FWS/OBS-81/22	2.	3. Recipient's Accession No.

4. Title and Subtitle
Managing Oil and Gas Activities in Coastal Environments: Refuge Manual

5. Report Date
September 1981

6.

7. Author(s)
W.L. Longley; R. Jackson; B. Snyder

8. Performing Organization Rept. No.

9. Performing Organization Name and Address
RPC, Inc.
1705 Guadalupe
Austin, TX 78701

10. Project/Task/Work Unit No.

11. Contract(C) or Grant(G) No.
(C) 14-16-0008-2152
(G)

12. Sponsoring Organization Name and Address
Office of Biological Services
Fish and Wildlife Service
U.S. Department of the Interior
Washington, D.C. 20240

13. Type of Report & Period Covered
1977 to 1981

14.

15. Supplementary Notes

16. Abstract (Limit: 200 words)

This report documents the management of oil and gas development on national wildlife refuges on the Louisiana and Texas coasts. It explains the nature of ownership, leasing rights, and legal considerations related to oil and gas extraction on refuges. The report describes five federal refuges selected for analysis and the different marsh and estuarine ecosystems found on the refuges and in the coastal zone. It explains oil and gas extraction and transport methods used in coastal systems, and examines how each habitat is affected by these activities. Existing regulations and guidelines are analyzed, and new ones proposed. The report is a planning tool for refuge personnel, to aid them in assessing impacts, issuing permits, and generally managing oil and gas activities.

17. Document Analysis a. Descriptors

Swamps, petroleum exploitation, petroleum transportation

b. Identifiers/Open-Ended Terms

Aransas, Brazoria, San Bernard, Delta, Sabine, coastal upland, salt marsh, brackish marsh, fresh marsh, delta marsh, levees, spoil banks, Oil and Gas Impacts, permits, stipulations, Wildlife refuge, ecosystem.

c. COSATI Field/Group

18. Availability Statement	19. Security Class (This Report)	21. No. of Pages
Unlimited	Unclassified	466
	20. Security Class (This Page)	22. Price

(See ANSI-Z39.18) *See Instructions on Reverse* OPTIONAL FORM 272 (4-77) (Formerly NTIS-35) Department of Commerce