PUBLIC NOTICE

US Army Corps of Engineers
Omaha District

Application No: NWO-2012-02064-DEN
Project: Goldsmith Gulch Improvements Project
Applicant: Southeast Metro Stormwater Authority
Waterway: Goldsmith Gulch
Issue Date: November 21, 2012
Expiration Date: December 20, 2012

REPLY TO:
Denver Regulatory Office
9307 South Wadsworth Blvd
Littleton, CO 80123-6901
FAX (303) 979-0602

30 DAY NOTICE

PUBLIC NOTICE
FOR SECTION 404 PERMIT APPLICATION SUBMITTED TO U.S. ARMY CORPS OF ENGINEERS

The District Engineer, U.S. Army Engineer District, Omaha, Nebraska is evaluating a Department of the Army permit application from **Southeast Metro Stormwater Authority, 76 Inverness Dr. East, Suite A, Englewood, CO 80112.** Permits are issued under Section 404 of the Clean Water Act (Section 404) which regulates the placement of dredged or fill material in the nation's waters.

Summary

Southeast Metro Stormwater Authority (SEMSWA)is proposing work on Goldsmith Gulch in unincorporated Arapahoe County, Colorado. SEMSWA is proposing to place fill material into Goldsmith Gulch to facilitate flood flows along a 750 linear-foot reach. Associated with this project are channel modifications to Goldsmith Gulch to promote stream stabilization. The project is proposed to impact 750 linear-feet of stream, including 0.02 acre of wetlands.

Location

The project is located along Goldsmith Gulch at Peakview Avenue and continues approximately 750 linear feet to the North, in unincorporated Arapahoe County, Colorado within Section 22, Township 5 South, Range 67 West of the 6th Principle Meridian.

Existing conditions

The project area encompasses approximately 750 feet of Goldsmith Gulch downstream of an Peakview Avenue. Within the project area, Goldsmith Gulch flows within a 3- to 5-foot-wide channel surrounded by dense residential development. A sanitary sewer line parallels the western side of the gulch and a concrete pedestrian trail parallels most of the eastern side of the gulch. Previous channel improvements in the reach include several stormwater outfalls, buried riprap and timber-wall bank protection treatments, a culvert trail crossing, and a rock check structure. The project reach is one of the only sections of Goldsmith Gulch upstream of the Arapahoe Lakes Reservoir that is within an open, natural channel bottom.

Description of work

SEMSWA is proposing to conduct drainage work along 750 linear feet of the west branch of Goldsmith Gulch downstream of East Peakview Avenue. The proposed work includes installing two sloping grouted boulder drop structures and one riprap check structure, grading a lower and slightly wider low-flow channel, and installing grouted boulder bank protection treatments. The proposed design would reshape the channel and flatten the overall channel slope to reduce velocities and erosive properties of the drainage, while maintaining the current flood conveyance capacity through the project area.

In conjunction with the Goldsmith Gulch drainage work, the culvert trail crossing at the downstream end of the project area would be replaced with a box culvert to convey the 100-year storm event, and about 80 linear feet of the a sanitary sewer line would be relocated. The box culvert would be installed at the downstream end of one of the grouted boulder drop structures, and the existing trail would be aligned away from the gulch and up to a parking lot on the eastern side of the gulch. A portion of the concrete trickle channel downstream of the existing culvert would be removed and replaced with a concrete pan and riprap bank protection.

Purpose

For purposes of definition under Section 404, the basic project purpose is to provide flood protection. The overall project purpose is to provide 100-year flood protection on Goldsmith Gulch for 800 linear feet downstream of Peakview Avenue.

Impacts and Mitigation

The project is expected to permanently impact approximately 750 linear feet of stream (waters of the U.S.), including 0.02 acre of wetlands. The applicant is proposing to restore the channel onsite and purchase wetlands bank credits for wetland losses. Mitigation will occur at a ratio of 1:1.

****

The Colorado Department of Public Health and Environment, WQCD-GWPS-B2, 4300 Cherry Creek Drive South, Denver, Colorado 80222-1530, will review the proposed project for state certification in accordance with the provisions of Section 401 of the Clean Water Act. The certification, if issued, will express the State's opinion that the operations undertaken by the applicant will not result in a violation of applicable water quality standards. For further information, please contact the Colorado Water Quality Control Division, (303) 692-3500.

In compliance with the Endangered Species Act, a preliminary determination has been made that the described work will not affect species designated as threatened or endangered or adversely affect critical habitat. In order to complete our evaluation of this activity, comments are solicited from the U.S. Fish and Wildlife Service and other interested agencies and individuals.

The Corps of Engineers, Omaha District will comply with the National Historic Preservation Act of 1966, and amendments and the procedures set forth in 33 CFR 325, Appendix C. We have checked the National Register of Historic Places, and any available site database information, and there are no known National Register sites in the vicinity. We will evaluate input by the State Historic Preservation Office, Tribes, and the public in response to this public notice, and we may conduct or require a survey of the permit area to check for unknown historic or prehistoric properties, if warranted.

The decision whether to issue a permit will be based on an evaluation of the probable impacts including cumulative impacts of the proposed activity on the public interest. That decision will reflect the national concern for both protection and utilization of important resources. The benefits which reasonably may be expected to accrue from the proposal must be balanced against the reasonably foreseeable detriments. All factors which may be relevant to the proposal will be considered including the cumulative effects thereof; among those are conservation, economics, aesthetics, wetlands, fish and wildlife values, flood hazards, floodplain values, land use, navigation, shoreline erosion and accretion, recreation, water supply and conservation, energy needs, safety, food and fiber production, mineral needs, considerations of property ownership and, in general, the needs and welfare of the people. In addition, the evaluation of the impact of the work on the public interest will include application of the guidelines promulgated by the Administrator, Environmental Protection Agency, under authority of Section 404(b) of the Clean Water Act (40 C.F.R. Part 230).

The Corps of Engineers is soliciting written comments from the public; Federal, state and local agencies and officials; Indian Tribes; and other interested parties in order to consider and evaluate the impacts of this proposed activity. Any comments received will be considered by the Corps of Engineers to determine whether to issue, modify, condition or deny a permit for this proposal. To make this decision, comments are used to assess impacts on endangered species, historic properties, water quality, general environmental effects, and other public interest factors listed above. Comments are used in the preparation of an Environmental Assessment and/or an Environmental Impact Statement pursuant to the National Environmental Policy Act. Comments are also used to determine the need for a public hearing and to determine the overall public interest of the proposed activity.

Comments, both favorable and unfavorable, will be accepted, made a part of the record and will receive full consideration in subsequent actions on this application. Any agency or individual having an objection to the work should identify it as an objection with clear and specific reasons. All replies to the public notice should be sent to the **U. S. Army Corps of Engineers, Denver Regulatory Office, 9307 South Wadsworth Blvd, Littleton, Colorado 80123-6901.** For additional information please contact **Mr. Kiel Downing at (303) 979-4120 or visit the Denver Regulatory Office web site at:**

http://www.nwo.usace.army.mil/Missions/RegulatoryProgram/Colorado/PublicNotices.aspx

The District Engineer will consider requests for holding a public hearing, for the purpose of gathering additional information. Before the expiration date of this notice, anyone may request, in writing, that a public hearing be held. Requests for a public hearing should state specifically the reasons for holding a public hearing, and what additional information would be obtained. Should the District Engineer decide that additional information is required and a public hearing should be held, interested parties will be notified of the date, time and location.

Comments received after the close of business on the expiration date of this public notice will not be considered.

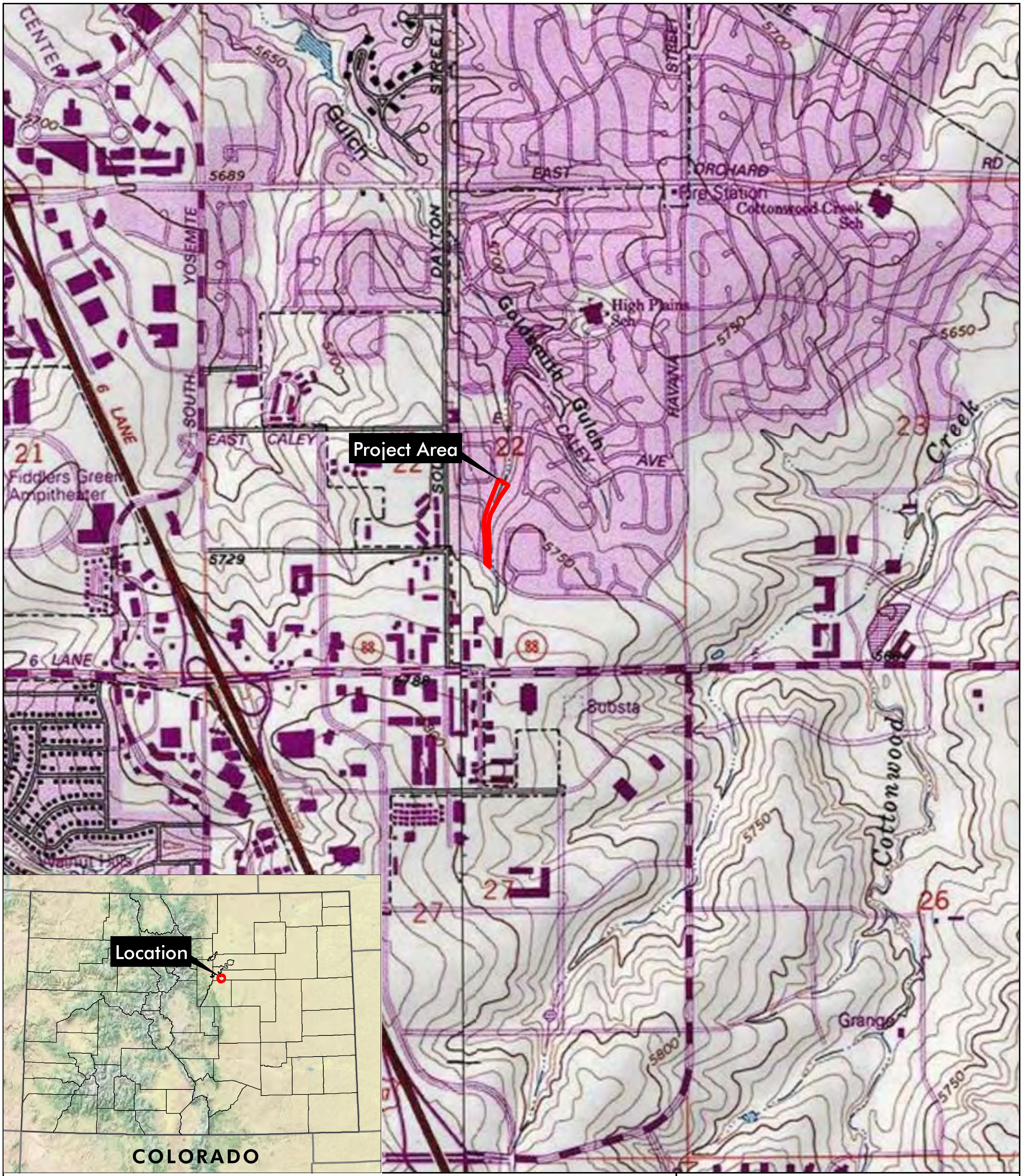
Project Area
Location
COLORADO
CENTER
Gulch
STREET
5650
5700
5689
YOSEMITE
DAYTON
EAST
ORCHARD
RD
Fire Station
Cottonwood Creek Sch
High Plains Sch
Goldsmith Gulch
HAVANA
STREET
5750
EAST CALEY
CALEY
AVE
SOUTH
LANE
21
22
23
Fiddlers Green Ampitheater
Creek
5729
88
6 LANE
5789
Substa
Cottonwood
26
27
Grange
5800
0
750
1,500
Feet
N

Goldsmith Gulch Downstream of Peakview Drainage Improvements

Section 22, T5S, R67W; 6th PM

UTM NAD 83: Zone 13N; 510845mE, 4383620mN

Latitude, Longitude: 39.602251°N, 104.873678°W

USGS Parker, CO Quadrangle

Arapahoe County, Colorado

Figure 1
Vicinity Map

Prepared for: Icon Engineering
File: 4828 figure 1 Downstream.mxd [dlH]
June 2011

ERO Resources Corp.

Portions of this document include intellectual property of ESRI and its licensors and are used herein under license. Copyright © 2008 ESRI and its licensors. All rights reserved.

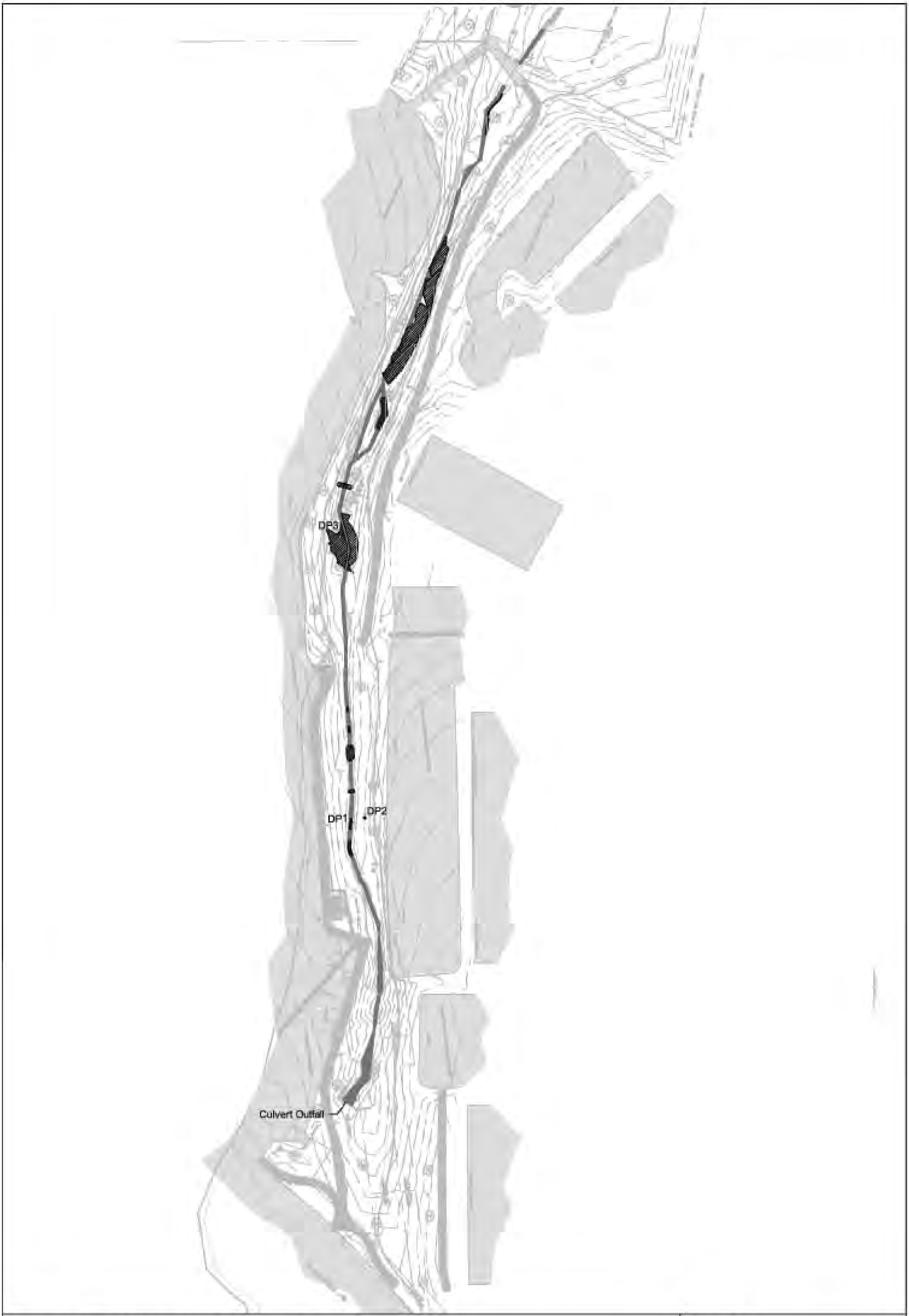
DP3
DP1
DP2
Culvert Outfall

Goldsmith Gulch Downstream of Peakview Drainage Improvements

▨ Wetland

▬ Open Water

◆ Data Point

0
30
60
Feet
N

Base Data Provided by: ICON Engineering

Figure 2
Existing Conditions

Produced for: Icon Engineering
File: ERO_Wetlands_2012_09_11
September 2012

ERO Resources Corp.

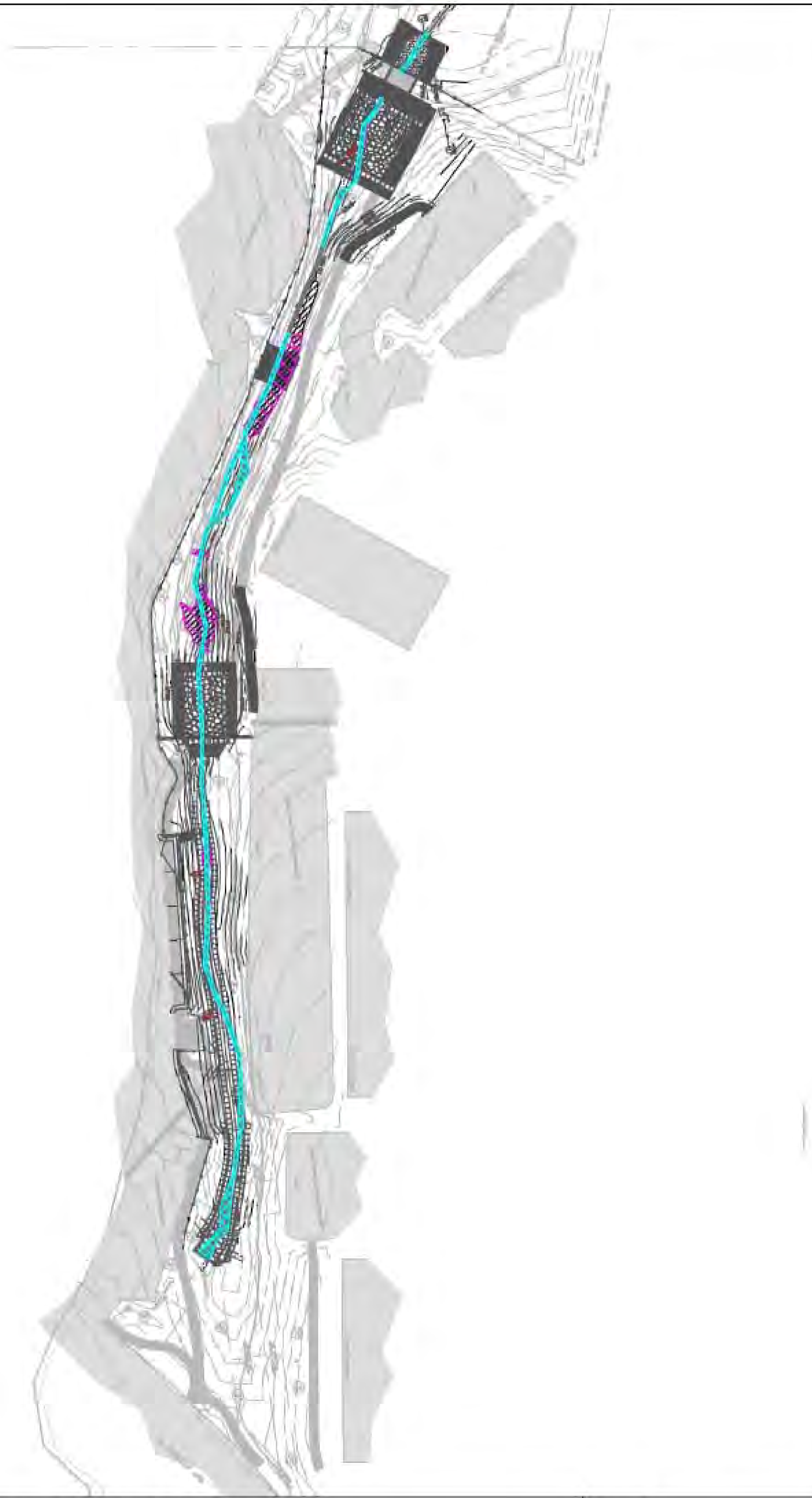

Goldsmith Gulch Downstream of Peakview Drainage Improvements

▨ Existing Wetland (0.03 ac)
■ Open Water (0.041 ac)
▨ Impacted Wetland (0.02 ac)
▨ Impacted Open Water (0.038 ac)

Base Data Provided by: ICON Engineering

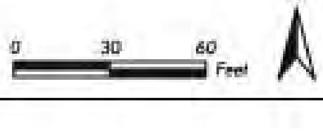

Figure 3
Proposed Impact

Produced for: Icon Engineering
File: 4828\ERO_Wetlands_2012_10_22
October 2012

ERO
ERO Resources Corp.

SOUTHEAST METRO STORMWATER AUTHORITY
URBAN DRAINAGE AND FLOOD CONTROL DISTRICT

GOLDSMITH GULCH
CHANNEL IMPROVEMENTS

SEMSWA PROJECT No. C09-3004-2

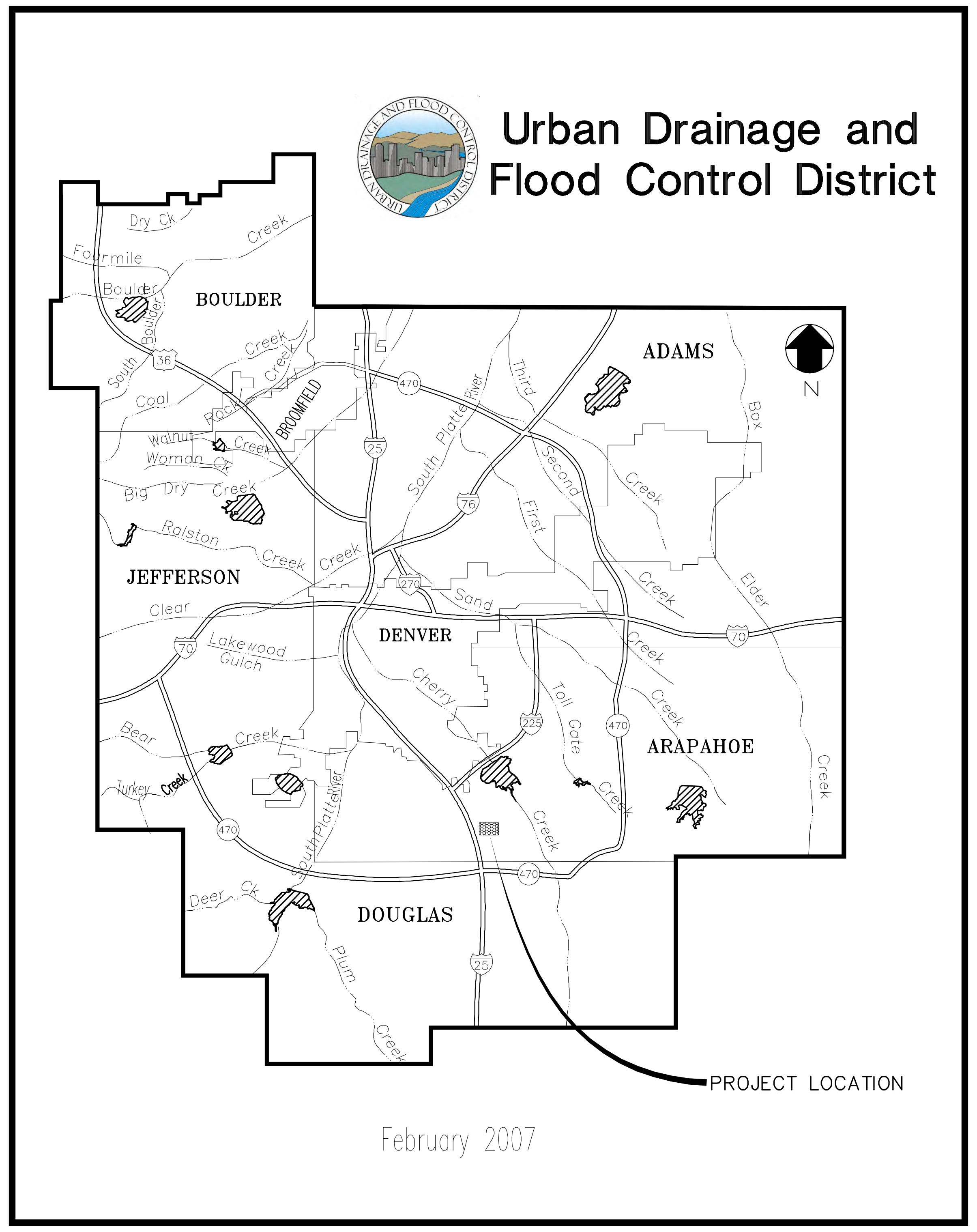
Urban Drainage and
Flood Control District
BOULDER
ADAMS
JEFFERSON
DENVER
ARAPAHOE
DOUGLAS
BROOMFIELD
Dry Ck
Fourmile
Creek
Boulder
South
Coal
Rock
Walnut
Woman Ck
Big Dry Creek
Ralston
Creek
Clear
Lakewood Gulch
Bear Creek
Turkey Creek
Deer Ck
Plum Creek
South Platte River
Third
Second
First
Box
Elder
Sand
Cherry
Toll Gate
Creek
36
25
470
76
270
70
225
N
PROJECT LOCATION
February 2007

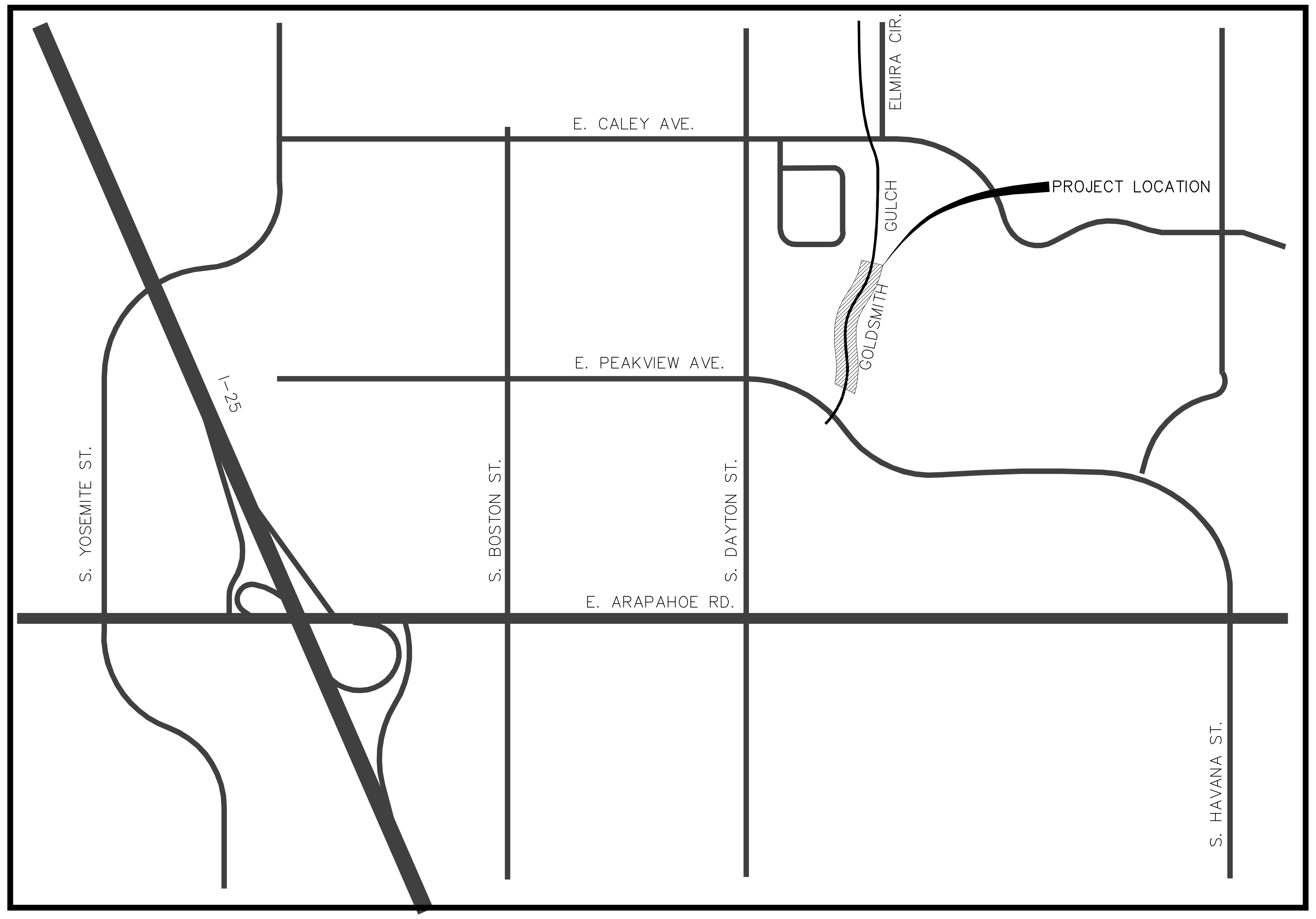
E. CALEY AVE.
ELMIRA CIR.
PROJECT LOCATION
GOLDSMITH GULCH
E. PEAKVIEW AVE.
I-25
S. YOSEMITE ST.
S. BOSTON ST.
S. DAYTON ST.
E. ARAPAHOE RD.
S. HAVANA ST.

LOCATION MAP
NOT TO SCALE

OCTOBER 2012

-SHEET INDEX -

SHEET	DESCRIPTION
1	COVER
2	GENERAL INFORMATION
3	SOILS INFORMATION
4	SURVEY CONTROL AND RIGHT-OF-WAY MAP
5-6	CHANNEL LAYOUT AND GEOMETRY
7	DEMOLITION PLAN
8-9	CHANNEL PLAN AND PROFILE
10	TRAIL PLAN AND PROFILE
11	PARKING PLAN, CURB AND GUTTER, AND DETAILED GRADING
12	PRECAST 3-SIDED CULVERT PLAN AND SECTIONS, HEADWALL AND WINGWALL DETAILS
13	DROP NO. 1 – DETAILED PLAN AND SECTIONS
14	DROP NO. 2 – DETAILED PLAN AND SECTIONS
15	STORM SEWER PROFILES (NOT INCLUDED IN SUBMITTAL)
16	SANITARY SEWER REROUTE PLAN AND PROFILE
17-18	DETAILS

– APPROVALS –

URBAN DRAINAGE AND FLOOD CONTROL DISTRICT

DAVID BENNETTS, P.E. PROGRAM MANAGER
DESIGN, CONSTRUCTION, AND MAINTENANCE PROGRAM
DATE

RICHARD BORCHARDT, P.E. PROJECT ENGINEER
DESIGN, CONSTRUCTION, AND MAINTENANCE PROGRAM
DATE

SOUTHEAST METRO STORMWATER AUTHORITY

JOHN A. McCARTY, P.E. EXECUTIVE DIRECTOR
DATE

DENNIS WELKER, P.E. CIP PROGRAM MANAGER
DATE

I HEREBY AFFIRM THAT THESE FINAL CONSTRUCTION PLANS FOR GOLDSMITH GULCH CHANNEL IMPROVEMENTS WERE PREPARED BY ME (OR UNDER MY DIRECT SUPERVISION) IN ACCORDANCE WITH THE REQUIREMENTS OR APPROVED VARIANCES OF THE INFRASTRUCTURE DESIGN AND CONSTRUCTION STANDARDS AND THE ARAPAHOE COUNTY STORMWATER MANAGEMENT MANUAL.

FOR AND ON BEHALF OF
ICON ENGINEERING, INC.

PROJECT MANAGER: MATT URSETTA, P.E.

PROJECT ENGINEER: MORGAN McDERMOTT, P.E.
303-221-0802
DATE

Southeast Metro Stormwater Authority

ICON ENGINEERING, INC.
8100 South Akron Street, Suite 300, Englewood, CO 80112
Phone (303) 221-0802 / Fax (303) 221-4019

811
Know what's below.
Call before you dig.

ICON Job No. 11-033-GSU-352
Sheet 1

P:\P\11033GSU\Dwg\FINAL SHEET SET\SHEET-01 COVER SHEET.dwg, 10/17/2012 12:14:59 PM, dbernier, AcroPlot.pc3, 1:1

GENERAL NOTES

1. ALL MATERIAL, EQUIPMENT, INSTALLATION, AND CONSTRUCTION SHALL BE IN ACCORDANCE WITH THE URBAN DRAINAGE AND FLOOD CONTROL DISTRICT (UDFCD) AND SOUTHEAST METRO STORMWATER AUTHORITY (SEMSWA) STANDARDS AND SPECIFICATIONS.
2. ALL MATERIALS AND WORKMANSHIP SHALL BE SUBJECT TO INSPECTION BY THE UDFCD AND SEMSWA. THE OWNERS RESERVE THE RIGHT TO ACCEPT OR REJECT ANY SUCH MATERIALS AND WORKMANSHIP THAT DOES NOT CONFORM TO THEIR STANDARDS AND SPECIFICATIONS.
3. THE CONTRACTOR SHALL NOTIFY THE OWNERS A MINIMUM OF 48 HOURS PRIOR TO BEGINNING CONSTRUCTION.
4. THE CONTRACTOR SHALL BE RESPONSIBLE FOR RESTORING ALL DISTURBED SURFACES AND RELATED STRUCTURES, INCLUDING BUT NOT LIMITED TO, DRIVEWAYS, CURBS, GUTTERS, WALKS, LANDSCAPING, FENCES, AND BITUMINOUS PAVEMENTS TO THEIR ORIGINAL CONDITION (OR BETTER). SEMSWA AND THE CONTRACTOR SHALL TOGETHER COORDINATE THE DOCUMENTATION OF EXISTING GRADES, CONDITIONS, AND OTHER INFORMATION PRIOR TO ALL CONSTRUCTION ACTIVITIES. THE CONTRACTOR SHALL INCLUDE THIS WORK IN THE BID.
5. ALL GRADES SHOWN ARE FINISHED GRADES, UNLESS OTHERWISE NOTED ON THE DRAWINGS.
6. TOPSOIL SHALL BE TAKEN FROM ALL DISTURBED LANDSCAPED AREAS AND BE STOCKPILED. AFTER THE WORK IS COMPLETED THE STOCKPILED TOPSOIL SHALL BE SPREAD AND PREPARED FOR SEEDING OR SOD IN ACCORDANCE WITH THE CONTRACT DOCUMENTS FOR ALL AREAS OF THE PROJECT DISTURBED BY THE CONSTRUCTION. TOPSOIL DEPTH SHALL BE A MINIMUM OF SIX INCHES OR AS OTHERWISE NOTED ON THE DRAWING. TOPSOIL SHALL BE PLACED TO MEET FINISHED GRADES.
7. THE CONTRACTOR SHALL NOTIFY THE ENGINEER IMMEDIATELY OF ANY FIELD CONDITION NOT CONSISTENT WITH THE CONTRACT DOCUMENTS.
8. THE CONTRACTOR IS RESPONSIBLE FOR SAVING AND PROTECTING ALL EXISTING TREES AND VEGETATION WHERE REMOVAL FOR CONSTRUCTION IS NOT MANDATORY. ALL TREES TO BE REMOVED OR RELOCATED WILL BE MARKED BY THE ENGINEER PRIOR TO REMOVAL.
9. CONSTRUCTION SURVEYING SHALL BE PROVIDED BY THE CONTRACTOR AND SHALL BE COMPLETED IN ACCORDANCE WITH THE CONTRACT DOCUMENTS.
10. CONTRACTOR SHALL PROTECT ALL EXISTING CURB, GUTTER, SIDEWALK, AND ASPHALT PAVEMENT NOT REQUIRED TO BE REMOVED AND REPLACED FROM DAMAGE BY EQUIPMENT OR CONSTRUCTION OUTSIDE OF EASEMENTS. ALL CURB, GUTTER, SIDEWALK AND ASPHALT DAMAGED BY THE CONTRACTOR SHALL BE REMOVED AND REPLACED AT THE CONTRACTOR'S EXPENSE AND TO THE SATISFACTION OF THE OWNER.
11. THE CONTRACTOR SHALL BE RESPONSIBLE TO IMMEDIATELY CLEANUP ANY TRASH OR MUD ON THE SITE OR ADJACENT STREETS AS A RESULT OF CONSTRUCTION.
12. EXCESS SOIL AND MUCK GENERATED SHALL BECOME THE PROPERTY OF THE CONTRACTOR AND SHALL BE DISPOSED OF BY THE CONTRACTOR AT A PLACE APPROVED BY THE OWNERS.
13. ALL CULVERT JOINTS SHALL MEET THE REQUIREMENTS OF ASTM C 1677 AND SHALL BE DESIGNED TO WITHSTAND 5 PSI OF INTERNAL AND EXTERNAL HYDROSTATIC PRESSURE.
14. CLEARING AND GRUBBING INCLUDES THE REMOVAL AND DISPOSAL OF ANY AND ALL PRIVATE LANDSCAPE IMPROVEMENTS, SHRUBS, EDGING, FABRIC, MULCH, TREES, TRAILS, STRUCTURES, AND ALL OTHER OBSTRUCTIONS THAT ARE NOT DESIGNATED OR PERMITTED TO REMAIN. IT ALSO INCLUDES SALVAGING MATERIALS AND STOCKPILING SAID MATERIALS FOR REUSE WHERE DESIGNATED BY THE ENGINEER. ALL WORK NOT COVERED BY A SEPARATE PAY ITEM IS INCLUDED IN THIS ITEM.
15. ANY LAYER OF ASPHALT PAVEMENT THAT IS TO HAVE A SUCCEEDING LAYER PLACED THEREON SHALL BE COMPLETED FULL WIDTH BEFORE THE SUCCEEDING LAYER IS PLACED.
16. A TACK COAT SHALL BE PLACED PRIOR TO THE PLACEMENT OF SUBSEQUENT LIFTS OF HOT MIX ASPHALT (HMA). BEFORE PLACEMENT OF TACK COAT, THE CONTRACTOR SHALL CLEAN THE PAVEMENT SURFACE AS DIRECTED BY THE ENGINEER. CLEANING AND TACK COAT SHALL NOT BE PAID FOR SEPARATELY BUT SHALL BE CONSIDERED AS INCIDENTAL TO THE HMA.
17. THE CONTRACTOR SHALL NOT PARK ANY VEHICLES OR EQUIPMENT OR DISTURB ANY AREA NOT APPROVED BY THE ENGINEER.
18. CONCRETE AND PAVEMENT SHALL BE SAW CUT TO A NEAT LINE PRIOR TO REMOVAL. SAW CUTTING WILL NOT BE MEASURED AND PAID FOR SEPARATELY BUT SHALL BE CONSIDERED INCIDENTAL TO REMOVAL OF STRUCTURES AND OBSTRUCTIONS.
19. ALL MATERIAL REMOVED SHALL BECOME THE PROPERTY OF THE CONTRACTOR UNLESS OTHERWISE INDICATED IN THE PLANS AND PROJECT SPECIFICATIONS. IT SHALL BE THE CONTRACTOR'S RESPONSIBILITY TO OBTAIN A DISPOSAL SITE FOR THE UNUSABLE MATERIALS.
20. MUCK EXCAVATION SHALL INCLUDE REMOVAL AND DISPOSAL OF MUCK AS WELL AS FURNISHING AND PLACING APPROVED MATERIAL..
21. FOR ASPHALT REPLACEMENT, THE CONTRACTOR IS TO REPLACE ASPHALT PAVEMENT THAT HAS BEEN DAMAGED DURING CONSTRUCTION WITH THE SAME THICKNESS, GRADE, AND GYRATORY TYPE.

UTILITY NOTES

1. THE LOCATIONS OF ALL UTILITIES SHOWN ON THESE DRAWINGS ARE APPROXIMATE. IT SHALL BE THE RESPONSIBILITY OF THE CONTRACTOR TO VERIFY THE EXISTENCE AND LOCATION OF ALL UNDERGROUND UTILITIES ALONG THE ROUTE OF WORK BEFORE COMMENCING CONSTRUCTION AND TO COORDINATE CONSTRUCTION SCHEDULES WITH UTILITY OWNERS. THE CONTRACTOR SHALL COOPERATE WITH UTILITY COMPANIES THAT ARE RELOCATING THEIR FACILITIES. LINES NOT RELOCATED SHALL BE PROTECTED BY THE CONTRACTOR IN PLACE. NO ADDITIONAL PAYMENT WILL BE ALLOWED FOR THE MINOR ADJUSTMENT OF STRUCTURES IN ORDER TO CLEAR A CONFLICTING UTILITY. THE CONTRACTOR SHALL CONTACT THE UTILITY NOTIFICATION CENTER OF COLORADO (UNCC) AT 811 FOR UTILITY LOCATIONS, AT LEAST (3) THREE WORKING DAYS PRIOR TO ANY EXCAVATION OR GRADING.
2. THE CONTRACTOR SHALL NOTE THAT SOME UTILITIES MIGHT NOT APPEAR ON THESE DRAWINGS AND THAT THE POTENTIAL CONFLICT WITH THESE UTILITIES SHALL BE CONSIDERED IN THE PREPARATION OF COST ESTIMATES AND BIDS.
3. THE CONTRACTOR SHALL FIELD VERIFY ALL UTILITIES AND COORDINATE WITH UTILITY OWNERS PRIOR TO STARTING CONSTRUCTION. THE CONTRACTOR SHALL BE RESPONSIBLE FOR PROTECTING UTILITIES DURING CONSTRUCTION AND SHALL HOLD THE OWNERS AND THE ENGINEER HARMLESS FOR DAMAGE ARISING FROM FAILURE TO ADEQUATELY PROTECT UTILITIES. IT SHALL BE THE RESPONSIBILITY OF THE CONTRACTOR TO SCHEDULE UTILITY ADJUSTMENTS TO ELIMINATE CONFLICT WITH PROGRESS OF THE WORK.
4. THE CONTRACTOR SHALL PROVIDE THE ENGINEER A SET OF DRAWINGS SHOWING A RECORD OF ANYTHING NOT CONSTRUCTED AS PRESENTED ON THESE DRAWINGS. THE INFORMATION PRESENTED ON THE RECORD DRAWINGS SHALL INCLUDE HORIZONTAL AND VERTICAL LOCATIONS OF ALL WATER, SANITARY SEWER, GAS MAINS, PHONE LINES AND CABLE TELEVISION LINES THAT ARE RELOCATED.
5. THE CONTRACTOR SHALL RECONSTRUCT ANY UTILITIES OR SERVICES DAMAGED BY EXECUTION OF THE WORK AT THE CONTRACTOR'S EXPENSE.
6. IF DURING CONSTRUCTION CONDITIONS ARE ENCOUNTERED WHICH COULD INDICATE A SITUATION THAT IS NOT IDENTIFIED IN THE PLANS OR SPECIFICATIONS, THE CONTRACTOR SHALL CONTACT THE ENGINEER IMMEDIATELY.

DRAWING-LEGEND

▭	BENCH
◎	TRASH
✿ 24	EXISTING BUSHES OR TREE CANOPY
—o—	SINGLE POST SIGN
□	UTILITY BOX
⊙	UTILITY POLE
↑	UTILITY GUY WIRE
◕	WATER VALVE
Ⓢ	SANITARY MANHOLE
☼	LIGHT POLE
Ⓓ	DRAINAGE MANHOLE
—— — — SS 12 ——	EXISTING SANITARY SEWER
—— — — ST 48 ——	EXISTING STORM SEWER
———— — — ————	EXISTING PROPERTY & ROW
—— — — QWEST ——	EXISTING QWEST LINE
— — — G — — — G —	EXISTING GAS LINE
— — — E — — — E —	EXISTING ELECTRIC LINE
—— COMCAST ——	EXISTING COMCAST LINE
—— OHE —— OHE ——	EXISTING OVERHEAD ELECTRIC LINE
—— — — W 6 ——	EXISTING WATER LINE
—— UKW —— UKW ——	EXISTING UNKNOWN UTILITY
— — — — — — —	RELOCATED WATERLINE
—— — — LOC ——	LIMITS OF CONSTRUCTION

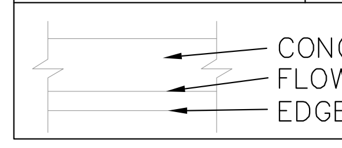

HATCH-LEGEND

⬚	EXISTING CONCRETE
▩	PAVEMENT TO BE REMOVED AND DISPOSED OFF
▦	PROPOSED RIPRAP
▢	PROPOSED GROUTED BOULDER
■	PROPOSED GROUTED BOULDER

ENGINEER:

ICON ENGINEERING, INC.
8100 SOUTH AKRON STREET, SUITE 300 ENGLEWOOD, CO 80112
MORGAN McDERMOTT (303) 221–0802

LOCAL JURISDICTIONS:

URBAN DRAINAGE AND FLOOD CONTROL DISTRICT
2480 W. 26TH AVE. SUITE 156–B, DENVER, CO. 80211
RICHARD BORCHARDT (303) 455–6277

SOUTHEAST METRO STORMWATER AUTHORITY
76 INVERNESS DR. EAST, SUITE A, ENGLEWOOD, CO 80112
MOLLY TRUJILLO (303) 858–8844

PRIVATE UTILITY OWNERS:

XCEL ENERGY
2070 S. VALENTIA ST
DENVER CO 80231 (303) 671–3928
MICHELLE FORD

CENTURY LINK COMMUNICATIONS
9750 E. COSTILLA AVE., ENGLEWOOD, CO. 80112
CHUCK BUCHANAN (303) 792–6061

COMCAST
6850 S. TUCSON WY., CENTENNIAL, CO. 80122
BRIAN JONES (303) 603–2938

CASTLEWOOD WATER AND SANITATION DISTRICT
HCL ENGINEERING AND SURVEYING
9570 KINGSTON CT. SUITE 310, ENGLEWOOD, CO 80112
LLOYD HERRERA (303) 773–1605

No.	DATE	REVISIONS	APPR.

ICON PROJECT NO. 11-033-GSU

PLAN	UTILITIES
DRAWN DDB	RESEARCHED DDB
DESIGNED MJU	DRAWN DDB
CHECKED MJU	CHECKED DDB

Southeast Metro Stormwater Authority

URBAN DRAINAGE AND FLOOD CONTROL DISTRICT

ICON
ENGINEERING, INC.
8100 South Akron Street, Suite 300, Englewood, CO 80112
Phone (303) 221-0802 / Fax (303) 221-4019
WWW.ICONENG.COM

GOLDSMITH GULCH CHANNEL IMPROVEMENTS

GENERAL INFORMATION

DATE
OCT 2012

SHEET
2

P:\P\11033GSU\Dwg\FINAL SHEET SET\SHEET-02 GENERAL INFORMATION.dwg, 10/17/2012 8:39:02 AM, dbernier, AcroPlot.pc3, 1:1

LEGEND:

▥	Asphalt
▩	Man-Made Fill: Comprised of sand and clay, was medium to highly plastic, fine to medium grained, moist, and brown to gray in color.
▨	Sand and Clay: Interbedded, medium to highly plastic, fine to medium grained, loose to medium dense/medium to stiff, moist to wet, and brown in color.
■	Claystone Bedrock: Fine to medium grained, medium to highly plastic, medium hard to hard, moist, gray in color, and occasionally iron stained.
▧	Sandstone Bedrock: Medium to coarse grained, low to medium plastic, hard to very hard, moist, brown in color, and occasionally iron stained.
⊢	Drive sample, 2-inch I.D. California liner sample
23/12	Drive sample blow count, indicates 23 blows of a 140-pound hammer falling 30 inches were required to drive the sampler 12 inches.
0	Depth to water level and number of days after drilling that measurement was taken.

NOTES:

1) Test holes were drilled on 07/27&29/10 with 4-inch diameter continuous flight power augers.

2) Locations of the test holes were measured approximately by pacing from features shown on the site plan provided.

3) Elevations of the test holes were not measured and the logs of the test holes are drawn to depth.

4) The test hole locations and elevations should be considered accurate only to the degree implied by the method used.

5) The lines between materials shown on the test hole logs represent the approximate boundaries between material types and the transitions may be gradual.

6) Groundwater level readings shown on the logs were made at the time and under the conditions indicated. Fluctuations in the water level may occur with time.

6) The material descriptions on this legend are for general classification purposes only. See the full text of this report for descriptions of the site materials and related recommendations.

GROUND
ENGINEERING CONSULTANTS

LEGEND AND NOTES

JOB NO.: 10-3613	FIGURE: 4
CADFILE NAME: 3613LEG.DWG	

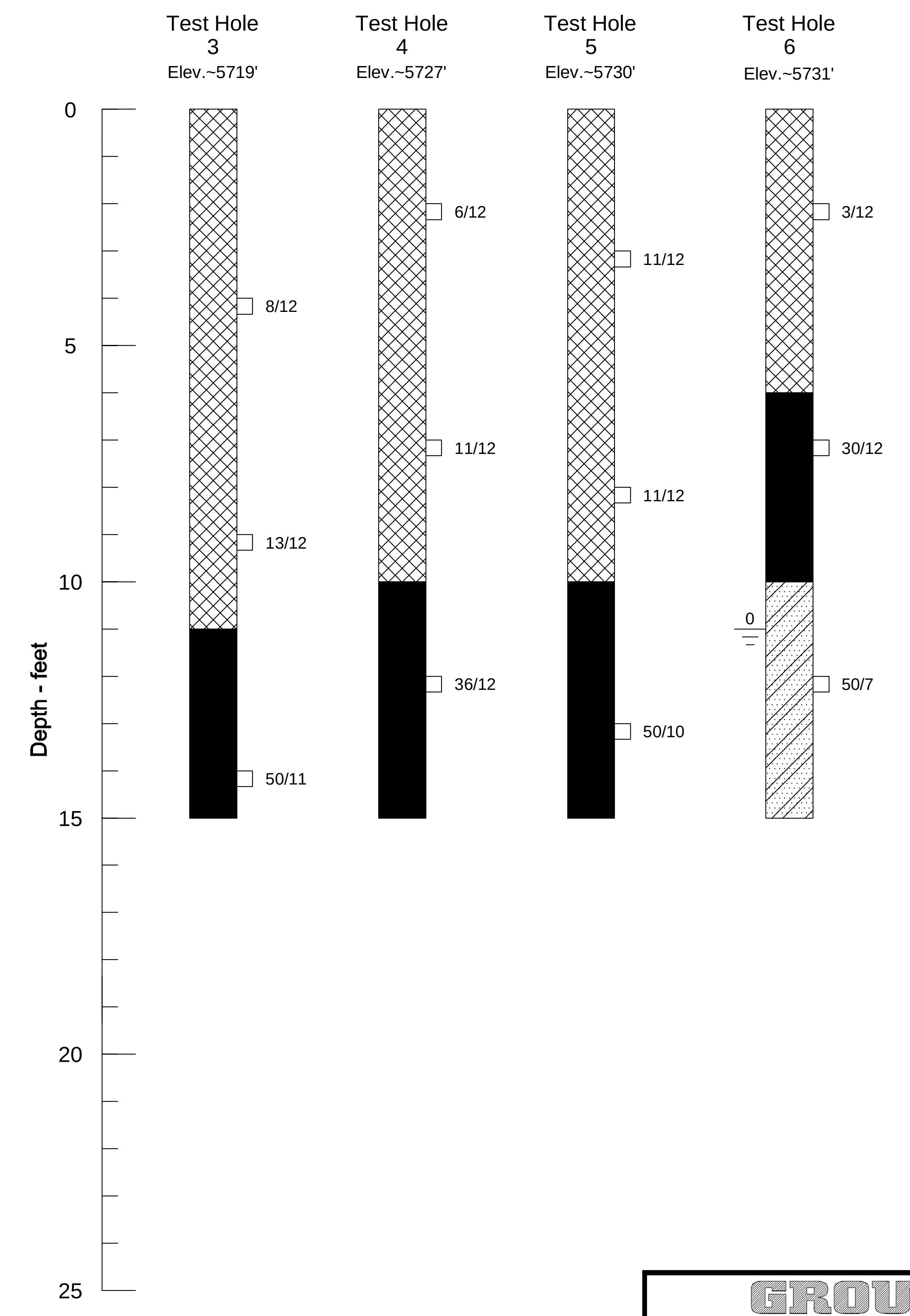

GROUND
ENGINEERING CONSULTANTS

LOGS OF TEST HOLES

JOB NO.: 10-3613	FIGURE: 2 & 3
CADFILE NAME: 3613LOG01.DWG	

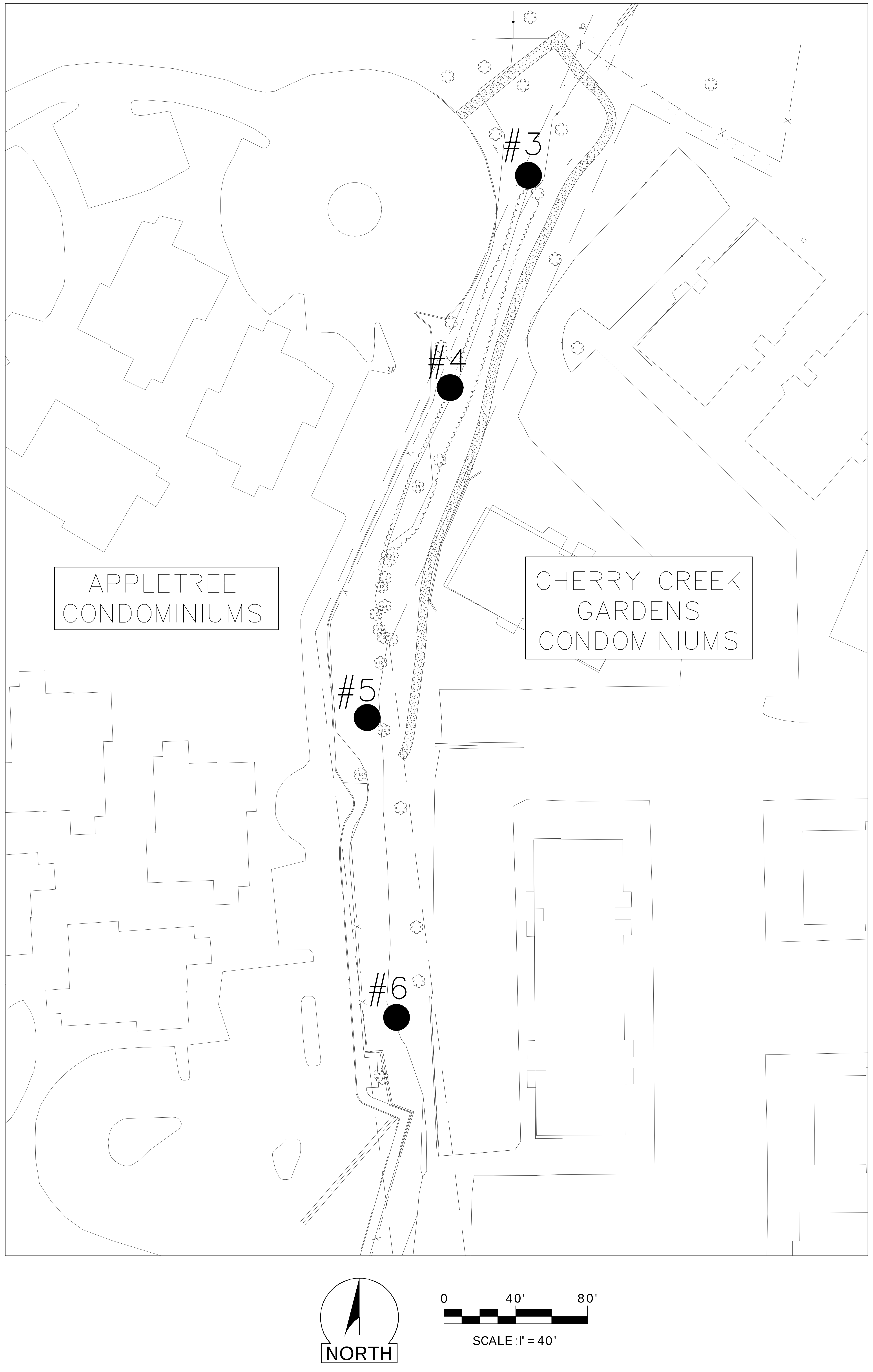

SCALE: 1" = 40'

No.	DATE	REVISIONS	APPR.

ICON PROJECT NO. 11-033-GSU

PLAN	UTILITIES
DRAWN	RESEARCHED
CR	DDB
DESIGNED	DRAWN
CR	DDB
CHECKED	CHECKED
MJU	DDB

Southeast Metro Stormwater Authority

URBAN DRAINAGE AND FLOOD CONTROL DISTRICT

ICON
ENGINEERING, INC.
8100 South Akron Street, Suite 300, Englewood, CO 80112
Phone (303) 221-0802 / Fax (303) 221-4019
WWW.ICONENG.COM

GOLDSMITH GULCH CHANNEL IMPROVEMENTS

SOILS INFORMATION

DATE
OCT 2012

SHEET
3

BASIS OF BEARING

BEARINGS ARE BASED ON A LINE BETWEEN A FOUND 2" BRASS CAP MARKED UD&FCD CWC-3 AND A FOUND 2" BRASS CAP IN CONCRETE MARKED UD&FCD CWC-1.

BEARINGS BEING N 20°14' 18" E.

BENCHMARK

COAST AND GEODETIC SURVEY MONUMENT. NGS DESIGNATION K54. NAVD 88 ELEVATION 5635.17.

STATE PLANE COORDINATES

STATE PLANE COORDINATES ARE GROUND COORDINATES BASED ON FOUND UD&FCD MONUMENTS CWC-3 AND CWC-1.

MODIFIED TO 5500 AMSL.

FACTOR 0.9999853.

CONTROL POINT TABLE

POINT NO.	NORTHING	EASTING	ELEVATION	DESCRIPTION
4	643737.82	2177137.89	5741.90	PK NAIL IN STUMP STUMP
6	644322.51	2177201.65	5722.02	CHISELED CROSS IN WALK
7	644261.95	2177067.72	5729.62	CHISELED CROSS ON TOP OF CURB
8	643918.47	2177050.58	5735.03	CHISELED CROSS IN WALK
9	643690.30	2177015.17	5740.98	CHISELED CROSS IN CURB PAN
10	643634.77	2177134.77	5745.37	CHISELED CROSS IN WALK
11	643977.15	2177106.12	5732.72	PK NAIL IN ASPHALT

PROPOSED
DRAINAGE EASEMENT
108.61 SF (0.0025 AC)
S07°05'20"E
26.27'
21.09'
N15°59'28"E
10.75'
N57°21'35"W
PEAKVIEW
PLACE
APARTMENTS
PROPOSED 20'
UTILITY EASEMENT
PROPOSED 20'
UTILITY EASEMENT
6
TEMPORARY
CONSTRUCTION
EASEMENT
N62°23'52"W
1.29'
99.94'
N24°14'20"E
S51°23'00"W
67.42'
S14°41'21"E
40.60'
S37°06'30"E
18.82'
20.00' DRAINAGE AND
UTILITY EASEMENT
TEMPORARY
CONSTRUCTION
EASEMENT
PROPOSED DRAINAGE EASEMENT
3062.50 SF (0.0703 AC)
11
S06°39'38"E
70.08'
48.08'
N24°14'20"E
148.03'
S02°25'42"W
N07°05'20"W
175.00'
4
10
10.00' DRAINAGE AND
UTILTY EASEMENT
S07°05'20"E
94.40'
60.68'
N32°38'25"E
L=61.53'
R=638.00
20.00' DRAINAGE AND
UTLITY EASEMENT
PROPOSED
DRAINAGE EASEMENT
2263.57 SF (0.0520 AC)
7
TEMPORARY
CONSTRUCTION
EASEMENT
PRIVATE DRIVE
8
20.00' DRAINAGE AND
UTILITY EASEMENT
ACCESS
EASEMENT
TEMPORARY
CONSTRUCTION
EASEMENT
PROPOSED DRAINAGE EASEMENT
1800.27 SF (0.0413 AC)
9
30.00' DRAINAGE
EASEMENT
APPLETREE
CONDOMINIUMS
NORTH
0
30'
60'
SCALE 1" = 30'

No.	DATE	REVISIONS	APPR.

PROJECT NO. 11-033-GSU-352

PLAN	UTILITIES
DRAWN CR	RESEARCHED DDB
DESIGNED CR	DRAWN DDB
CHECKED MJU	CHECKED DDB

Southeast Metro Stormwater Authority

ICON
ENGINEERING, INC.
8100 South Akron Street, Suite 300, Englewood, CO 80112
Phone (303) 221-0802 / Fax (303) 221-4019
WWW.ICONENG.COM

GOLDSMITH GULCH CHANNEL IMPROVEMENTS

SURVEY CONTROL AND
RIGHT-OF-WAY MAP

DATE
OCT 2012

SHEET
4

P:\P\11033GSU\Dwg\FINAL SHEET SET\SHEET-04 SURVEY CONTROL AND ROW MAP.dwg, 10/17/2012 8:41:10 AM, dbernier, AcroPlot.pc3, 1:1

CHANNEL ℄ LINE TABLE

LINE	LENGTH	BEARING
L1	6.13	S34°01'40"W
L2	47.50	S38°05'15"W
L3	72.84	S27°36'28"W
L4	81.16	S19°11'13"W
L5	100.12	S23°13'36"W
L6	94.76	S01°10'45"E
L7	60.43	S07°05'20"E
L8	27.91	S11°53'29"W
L9	10.00	S34°21'07"W

CHANNEL ℄ CURVE TABLE

CURVE	LENGTH	RADIUS	DELTA	TANGENT	CHORD
C1	13.72	75.00	10°28'46"	6.88	S32°50'52"W13.70
C2	14.70	100.00	8°25'16"	7.36	S23°23'50"W14.68
C3	35.26	500.00	4°02'24"	17.63	N21°12'24"E35.25
C4	21.30	50.00	24°24'22"	10.81	S11°01'26"W21.14
C5	20.01	100.00	11°28'00"	10.04	N04°33'15"E19.98
C6	39.64	100.00	22°42'40"	20.08	S01°04'05"E39.38
C7	31.08	100.00	17°48'23"	15.67	N03°31'13"W30.95
C8	51.37	150.00	19°37'20"	25.94	S04°25'41"E51.12
C9	24.96	200.00	7°09'02"	12.50	N10°39'50"W24.94
C10	33.13	100.00	18°58'48"	16.72	N02°24'04"E32.98
C11	11.76	30.00	22°27'38"	5.96	N23°07'18"E11.69

TRAIL ℄ LINE TABLE

LINE	LENGTH	BEARING
L10	37.62	S59°11'13"W
L11	1.57	S25°28'00"W
L12	5.03	S24°11'52"W
L13	1.63	S19°55'28"E
L14	44.46	S04°38'42"E
L15	7.38	S00°12'29"W

TRAIL ℄ CURVE TABLE

CURVE	LENGTH	RADIUS	DELTA	TANGENT	CHORD
C12	10.06	7.50	76°51'29"	5.95	N82°23'03"W9.33
C13	10.30	17.50	33°43'13"	5.30	S42°19'36"W10.15
C14	11.44	27.64	23°42'01"	5.80	S08°04'28"E11.35
C15	8.63	32.35	15°16'46"	4.34	N12°17'05"W8.60
C16	3.09	5.00	35°26'24"	1.60	N01°43'24"W3.04
C17	6.97	25.00	15°58'43"	3.51	S11°27'15"E6.95

CURB FL LINE TABLE

LINE	LENGTH	BEARING
L16	0.73	N15°59'48"E
L17	36.85	N19°26'36"W
L18	6.32	N03°27'53"W
L19	6.66	N85°47'11"E
L20	100.00	S04°06'27"E
L21	6.50	S85°53'33"W

CURB FL CURVE TABLE

CURVE	LENGTH	RADIUS	DELTA	TANGENT	CHORD
C18	3.15	2.00	90°06'22"	2.00	S49°09'38"E2.83
C19	3.14	2.00	89°59'10"	2.00	S40°53'58"W2.83

CHANNEL EDGE LINE TABLE

LINE	LENGTH	BEARING
L22	10.44	S42°46'19"W
L23	22.37	S27°37'08"W
L24	10.43	S12°26'38"W
L25	23.41	S27°36'28"W
L26	14.74	S00°07'30"E
L27	23.51	S28°18'35"W
L28	4.77	S10°51'54"W
L29	23.22	S02°10'23"E
L30	23.77	S07°50'50"W
L31	16.89	S07°25'17"W
L32	6.92	S34°21'07"W
L33	11.56	S11°53'29"W
L34	15.72	S35°28'38"W

CHANNEL EDGE CURVE TABLE

CURVE	LENGTH	RADIUS	DELTA	TANGENT	CHORD
C20	7.43	10.00	42°34'27"	3.90	N47°13'27"E7.26
C21	13.06	20.00	37°24'27"	6.77	S49°48'27"W12.83
C22	12.30	98.00	7°11'28"	6.16	S27°30'29"W12.29
C23	5.71	10.00	32°42'18"	2.93	S11°15'20"W5.63
C24	12.64	20.00	36°11'56"	6.54	N13°00'09"E12.43
C25	6.95	14.00	28°26'05"	3.55	N14°05'32"E6.88
C26	3.96	13.00	17°26'41"	1.99	S19°35'15"W3.94
C27	17.22	48.00	20°33'30"	8.71	S00°04'19"W17.13
C28	16.33	25.00	37°26'03"	8.47	S20°53'24"E16.04
C29	18.80	25.00	43°05'03"	9.87	N18°03'54"W18.36
C30	13.80	52.00	15°12'26"	6.94	S04°07'35"E13.76
C31	26.59	102.00	14°56'10"	13.37	N00°22'45"E26.51
C32	11.75	25.00	26°55'50"	5.99	N20°53'12"E11.64
C33	32.46	98.00	18°58'48"	16.38	N02°24'04"E32.32
C34	20.58	50.00	23°35'09"	10.44	N23°41'03"E20.44

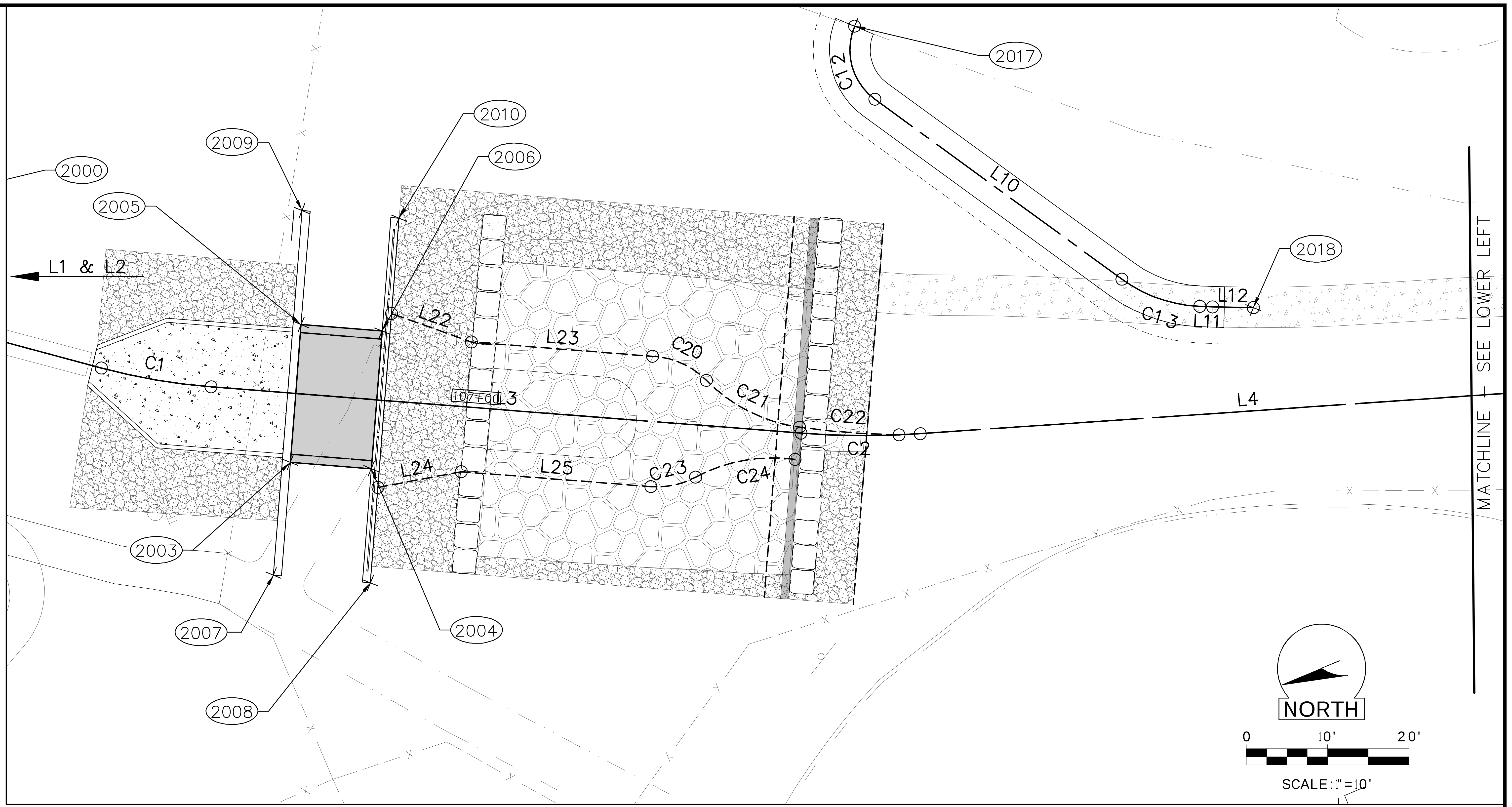

MATCHLINE – SEE UPPER RIGHT
C3
L5
C4
L6
2011
C14
L13
C15
L14
L15
2012
L26
C25
L27
C26
L28
C27
C5
C6
C30
C29
C28
L29
MATCHLINE – SEE SHEET 6
NORTH
0
10'
20'
SCALE: 1"=10'

POINT TABLE

POINT NO.	NORTHING	EASTING	
2000	644415.43	2177235.96	CL–CHANNEL
2003	644356.14	2177183.43	BOX CULVERT CORNER
2004	644347.27	2177178.79	BOX CULVERT CORNER
2005	644348.25	2177198.49	BOX CULVERT CORNER
2006	644339.39	2177193.85	BOX CULVERT CORNER
2007	644363.50	2177171.48	FRONT CORNER WINGWALL
2008	644352.88	2177165.92	FRONT CORNER WINGWALL
2009	644342.64	2177211.35	FRONT CORNER WINGWALL
2010	644332.02	2177205.80	FRONT CORNER WINGWALL
2011	644052.25	2177095.51	CL–WALK
2012	643979.37	2177103.07	CL–WALK
2013	643906.70	2177057.77	FL
2014	643806.96	2177064.93	FL
2015	643783.18	2177057.95	FL
2016	643731.57	2177071.86	FL
2017	644271.18	2177205.49	CL–WALK
2018	644239.63	2177154.37	CL–WALK

No.	DATE	REVISIONS	APPR.

PROJECT NO. 11-033-GSU-352

PLAN	UTILITIES
DRAWN CR	RESEARCHED DDB
DESIGNED CR	DRAWN DDB
CHECKED MJU	CHECKED DDB

ICON
ENGINEERING, INC.
8100 South Akron Street, Suite 300, Englewood, CO 80112
Phone (303) 221-0802 / Fax (303) 221-4019
WWW.ICONENG.COM

GOLDSMITH GULCH CHANNEL IMPROVEMENTS

CHANNEL LAYOUT AND GEOMETRY

DATE
OCT 2012

SHEET
5

P:\P\11033GSU\dwg\FINAL SHEET SET\SHEET-05-06 LAYOUT-GEOMETRY.dwg, 10/17/2012 8:37:07 AM, dbernier, AcroPlot.pc3, 1:1

CHANNEL ℄ LINE TABLE

LINE	LENGTH	BEARING
L1	6.13	S34°01'40"W
L2	47.50	S38°05'15"W
L3	72.84	S27°36'28"W
L4	81.16	S19°11'13"W
L5	100.12	S23°13'36"W
L6	94.76	S01°10'45"E
L7	60.43	S07°05'20"E
L8	27.91	S11°53'29"W
L9	10.00	S34°21'07"W

CHANNEL ℄ CURVE TABLE

CURVE	LENGTH	RADIUS	DELTA	TANGENT	CHORD
C1	13.72	75.00	10°28'46"	6.88	S32°50'52"W13.70
C2	14.70	100.00	8°25'16"	7.36	S23°23'50"W14.68
C3	35.26	500.00	4°02'24"	17.63	N21°12'24"E35.25
C4	21.30	50.00	24°24'22"	10.81	S11°01'26"W21.14
C5	20.01	100.00	11°28'00"	10.04	N04°33'15"E19.98
C6	39.64	100.00	22°42'40"	20.08	S01°04'05"E39.38
C7	31.08	100.00	17°48'23"	15.67	N03°31'13"W30.95
C8	51.37	150.00	19°37'20"	25.94	S04°25'41"E51.12
C9	24.96	200.00	7°09'02"	12.50	N10°39'50"W24.94
C10	33.13	100.00	18°58'48"	16.72	N02°24'04"E32.98
C11	11.76	30.00	22°27'38"	5.96	N23°07'18"E11.69

TRAIL ℄ LINE TABLE

LINE	LENGTH	BEARING
L10	37.62	S59°11'13"W
L11	1.57	S25°28'00"W
L12	5.03	S24°11'52"W
L13	1.63	S19°55'28"E
L14	44.46	S04°38'42"E
L15	7.38	S00°12'29"W

TRAIL ℄ CURVE TABLE

CURVE	LENGTH	RADIUS	DELTA	TANGENT	CHORD
C12	10.06	7.50	76°51'29"	5.95	N82°23'03"W9.33
C13	10.30	17.50	33°43'13"	5.30	S42°19'36"W10.15
C14	11.44	27.64	23°42'01"	5.80	S08°04'28"E11.35
C15	8.63	32.35	15°16'46"	4.34	N12°17'05"W8.60
C16	3.09	5.00	35°26'24"	1.60	N01°43'24"W3.04
C17	6.97	25.00	15°58'43"	3.51	S11°27'15"E6.95

CURB FL LINE TABLE

LINE	LENGTH	BEARING
L16	0.73	N15°59'48"E
L17	36.85	N19°26'36"W
L18	6.32	N03°27'53"W
L19	6.66	N85°47'11"E
L20	100.00	S04°06'27"E
L21	6.50	S85°53'33"W

CURB FL CURVE TABLE

CURVE	LENGTH	RADIUS	DELTA	TANGENT	CHORD
C18	3.15	2.00	90°06'22"	2.00	S49°09'38"E2.83
C19	3.14	2.00	89°59'10"	2.00	S40°53'58"W2.83

CHANNEL EDGE LINE TABLE

LINE	LENGTH	BEARING
L22	10.44	S42°46'19"W
L23	22.37	S27°37'08"W
L24	10.43	S12°26'38"W
L25	23.41	S27°36'28"W
L26	14.74	S00°07'30"E
L27	23.51	S28°18'35"W
L28	4.77	S10°51'54"W
L29	23.22	S02°10'23"E
L30	23.77	S07°50'50"W
L31	16.89	S07°25'17"W
L32	6.92	S34°21'07"W
L33	11.56	S11°53'29"W
L34	15.72	S35°28'38"W

CHANNEL EDGE CURVE TABLE

CURVE	LENGTH	RADIUS	DELTA	TANGENT	CHORD
C20	7.43	10.00	42°34'27"	3.90	N47°13'27"E7.26
C21	13.06	20.00	37°24'27"	6.77	S49°48'27"W12.83
C22	12.30	98.00	7°11'28"	6.16	S27°30'29"W12.29
C23	5.71	10.00	32°42'18"	2.93	S11°15'20"W5.63
C24	12.64	20.00	36°11'56"	6.54	N13°00'09"E12.43
C25	6.95	14.00	28°26'05"	3.55	N14°05'32"E6.88
C26	3.96	13.00	17°26'41"	1.99	S19°35'15"W3.94
C27	17.22	48.00	20°33'30"	8.71	S00°04'19"W17.13
C28	16.33	25.00	37°26'03"	8.47	S20°53'24"E16.04
C29	18.80	25.00	43°05'03"	9.87	N18°03'54"W18.36
C30	13.80	52.00	15°12'26"	6.94	S04°07'35"E13.76
C31	26.59	102.00	14°56'10"	13.37	N00°22'45"E26.51
C32	11.75	25.00	26°55'50"	5.99	N20°53'12"E11.64
C33	32.46	98.00	18°58'48"	16.38	N02°24'04"E32.32
C34	20.58	50.00	23°35'09"	10.44	N23°41'03"E20.44

POINT TABLE

POINT NO.	NORTHING	EASTING	
2000	644415.43	2177235.96	CL–CHANNEL
2003	644356.14	2177183.43	BOX CULVERT CORNER
2004	644347.27	2177178.79	BOX CULVERT CORNER
2005	644348.25	2177198.49	BOX CULVERT CORNER
2006	644339.39	2177193.85	BOX CULVERT CORNER
2007	644363.50	2177171.48	FRONT CORNER WINGWALL
2008	644352.88	2177165.92	FRONT CORNER WINGWALL
2009	644342.64	2177211.35	FRONT CORNER WINGWALL
2010	644332.02	2177205.80	FRONT CORNER WINGWALL
2011	644052.25	2177095.51	CL–WALK
2012	643979.37	2177103.07	CL–WALK
2013	643906.70	2177057.77	FL
2014	643806.96	2177064.93	FL
2015	643783.18	2177057.95	FL
2016	643731.57	2177071.86	FL
2017	644271.18	2177205.49	CL–WALK
2018	644239.63	2177154.37	CL–WALK

L28
C27
C30
29
C6
MATCHLINE SEE SHEET 5
C7
C8
C9
L7
C31
C10
L30
C33
L33
L8
L31
C32
C34
C11
L32
L9
L34
2016
C16
L16
L17
L18
C17
L20
L19
L21
2013
2014
2015
NORTH
0
10'
20'
SCALE: 1" = 10'

No.	DATE	REVISIONS	APPR.

PROJECT NO. 11-033-GSU-352

PLAN
DRAWN
CR
DESIGNED
CR
CHECKED
MJU

UTILITIES
RESEARCHED
DDB
DRAWN
DDB
CHECKED
DDB

Southeast Metro Stormwater Authority

ICON
ENGINEERING, INC.
8100 South Akron Street, Suite 300, Englewood, CO 80112
Phone (303) 221-0802 / Fax (303) 221-4019
WWW.ICONENG.COM

GOLDSMITH GULCH CHANNEL IMPROVEMENTS

CHANNEL LAYOUT AND GEOMETRY

DATE
OCT 2012

SHEET
6

P:\P\11033GSU\dwg\FINAL SHEET SET\SHEET-05-06 LAYOUT-GEOMETRY.dwg, 10/17/2012 8:37:41 AM, dbernier, AcroPlot.pc3, 1:1

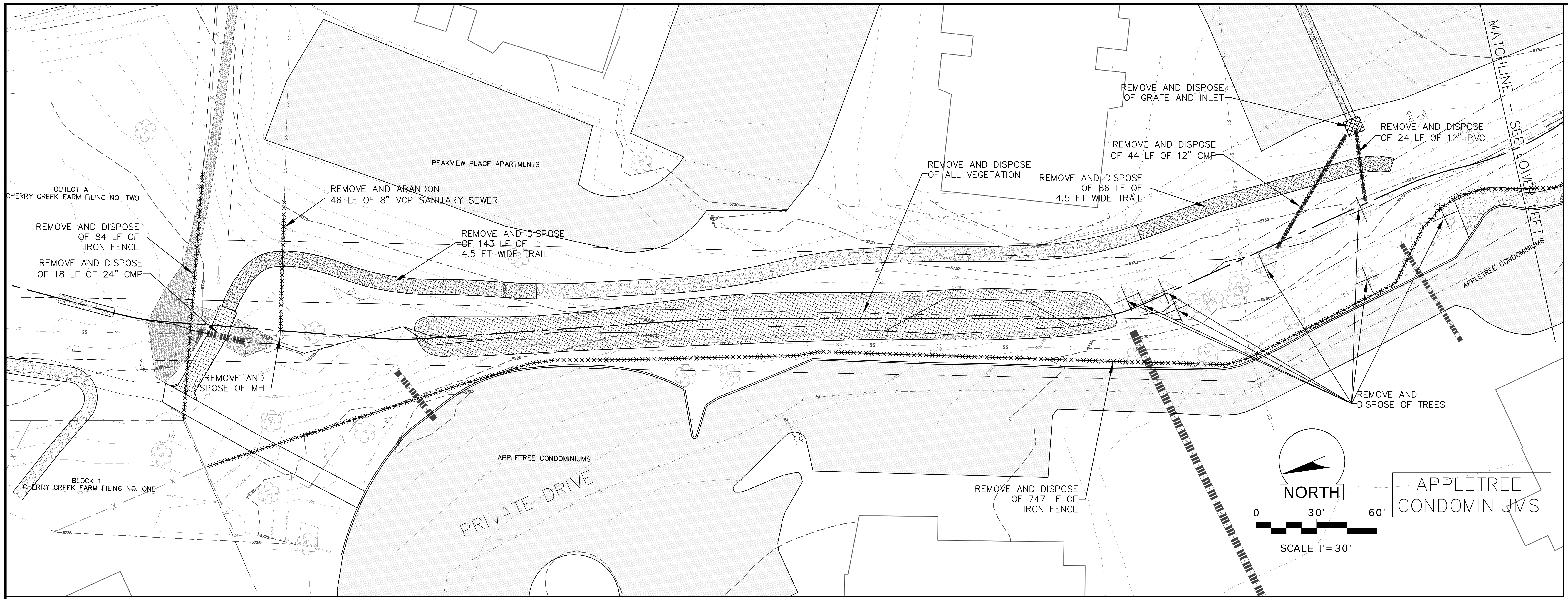
PEAKVIEW PLACE APARTMENTS
OUTLOT A
CHERRY CREEK FARM FILING NO. TWO
REMOVE AND ABANDON
46 LF OF 8" VCP SANITARY SEWER
REMOVE AND DISPOSE
OF 84 LF OF
IRON FENCE
REMOVE AND DISPOSE
OF 18 LF OF 24" CMP
REMOVE AND DISPOSE
OF 143 LF OF
4.5 FT WIDE TRAIL
REMOVE AND
DISPOSE OF MH
REMOVE AND DISPOSE
OF ALL VEGETATION
REMOVE AND DISPOSE
OF GRATE AND INLET
REMOVE AND DISPOSE
OF 44 LF OF 12" CMP
REMOVE AND DISPOSE
OF 86 LF OF
4.5 FT WIDE TRAIL
REMOVE AND DISPOSE
OF 24 LF OF 12" PVC
MATCHLINE – SEE LOWER LEFT
APPLETREE CONDOMINIUMS
REMOVE AND
DISPOSE OF TREES
BLOCK 1
CHERRY CREEK FARM FILING NO. ONE
APPLETREE CONDOMINIUMS
PRIVATE DRIVE
REMOVE AND DISPOSE
OF 747 LF OF
IRON FENCE
NORTH
0
30'
60'
SCALE: 1" = 30'
APPLETREE
CONDOMINIUMS

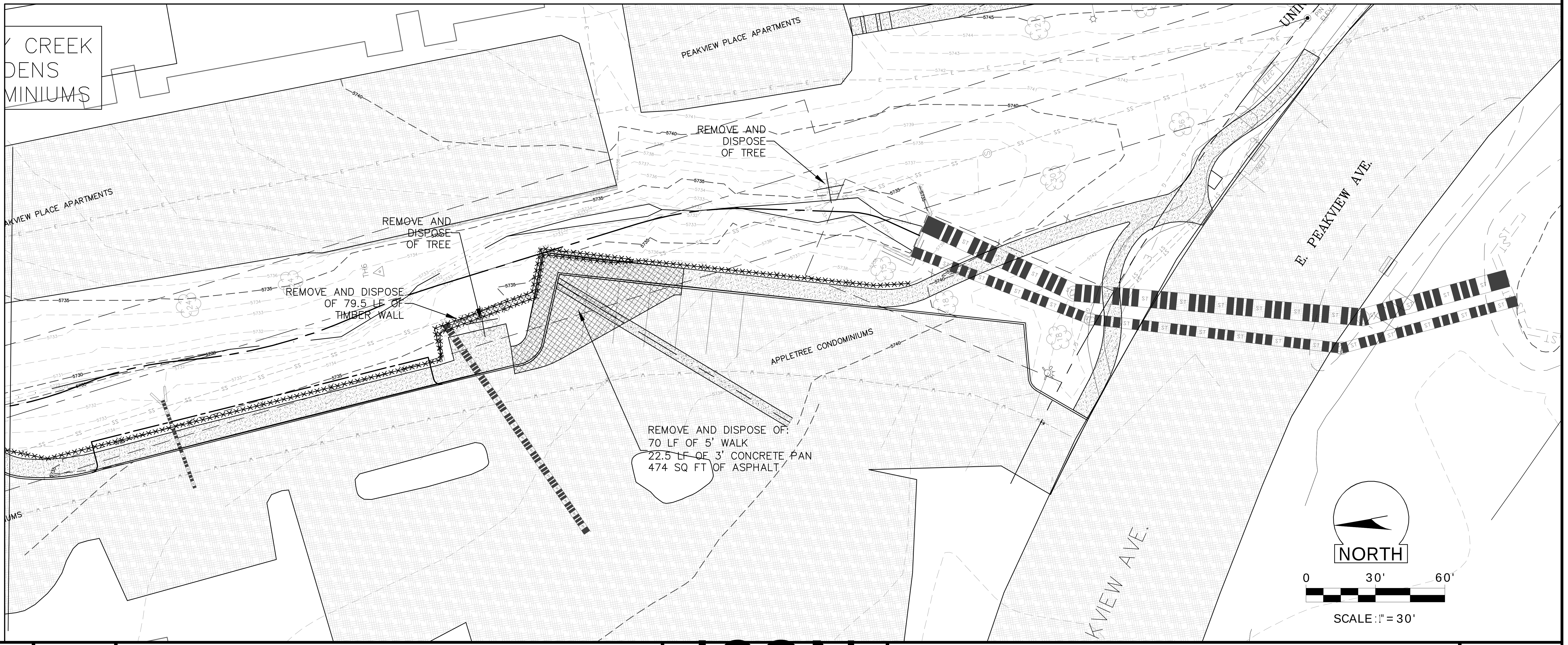
CREEK
DENS
MINIUMS
PEAKVIEW PLACE APARTMENTS
PEAKVIEW PLACE APARTMENTS
REMOVE AND
DISPOSE
OF TREE
REMOVE AND
DISPOSE
OF TREE
REMOVE AND DISPOSE
OF 79.5 LF OF
TIMBER WALL
MATCHLINE – SEE UPPER RIGHT
APPLETREE CONDOMINIUMS
REMOVE AND DISPOSE OF:
70 LF OF 5' WALK
22.5 LF OF 3' CONCRETE PAN
474 SQ FT OF ASPHALT
E. PEAKVIEW AVE.
KVIEW AVE.
UNI
NORTH
0
30'
60'
SCALE: 1" = 30'

No.	DATE	REVISIONS	APPR.

PROJECT NO. 11-033-GSU-352

PLAN	UTILITIES
DRAWN	RESEARCHED
CR	DDB
DESIGNED	DRAWN
CR	DDB
CHECKED	CHECKED
MJU	DDB

Southeast Metro Stormwater Authority

ICON
ENGINEERING, INC.
8100 South Akron Street, Suite 300, Englewood, CO 80112
Phone (303) 221-0802 / Fax (303) 221-4019
WWW.ICONENG.COM

GOLDSMITH GULCH CHANNEL IMPROVEMENTS

DEMOLITION PLANS

DATE
OCT 2012

SHEET
7

P:\P\11033GSU\Dwg\FINAL SHEET SET\SHEET-07 DEMO PLANS.dwg, 10/17/2012 12:39:30 PM, dbernier, AcroPlot.pc3, 1:1

EXISTING 100YR FLOODPLAIN
APPROXIMATE LIMITS OF EXISTING ROCK SWALE. CONTRACTOR REMOVE, SALVAGE AND REUSE AS NEEDED TO COMPLETE WORK
INSTALL SANITARY SEWER MANHOLES AND PIPE SEE SHEET 16
EXISTING 8" VCP SANITARY SEWER LINE TO BE ABANDONED
STA. 106+77.80 OFF. 51.31 L BEGIN REPLACE IRON FENCE
15'X6' 3-SIDED CONCRETE CULVERT WITH HEADWALL AND WINGWALL SEE SHEET 12
5-FT WIDE CONCRETE TRAIL SEE SHEET 10
REMOVE AND DISPOSE EXISTING TRAIL FROM STA. 106+87.58, OFFSET 6.53'L TO STA. 107+93.04, OFFSET 16.81'L (2' MIN SAWCUT)
LIMITS OF CONSTRUCTION
EXTEND EXISTING CONCRETE PAN TO GROUTED BOULDER DROP SEE SHEET 15
EXISTING 12" CMP TO BE REMOVED
EXISTING 12" PVC TO BE REMOVED
REMOVE AND DISPOSE OF TREE STUMP
5-FT WIDE CONCRETE TRAIL SEE SHEET 10
CONTROL CHECK STRUCTURE
STA. 106+11.71 SAWCUT EXISTING CONCRETE PAN
INSTALL CONCRETE PAN AND CURB. SEE DETAIL SHEET 18
EXISTING CENTURY LINK UTILITY TO BE LOWERED
STA. 106+77.80 OFF. 32.06 R END REPLACE IRON FENCE
STA. 106+86.09 OFF. 46.96 R BEGIN REPLACE IRON FENCE
INSTALL 30° BEND
STA. 107+50 STORM SEWER OUTFALL SEE SHEET 15
EXISTING SANITARY SEWER MH TO BE LOWERED AND RELOCATED
REMOVE AND DISPOSED OFF EXISTING ASPHALT PATH
LIMITS OF CONSTRUCTION
PROTECT EXISTING FIRE HYDRANT
POST PROJECT 100-YR FLOODPLAIN
STA. 109+87.57 STORM SEWER OUTFALL SEE SHEET 15
STA. 110+79.66 PROPOSED BOULDERS WILL GRADE UP TO EXISTING PIPE OUTLET
PEAKVIEW PLACE APARTMENTS
APPLETREE CONDOMINIUMS
CHERRY CREEK FARM FILING NO. ONE
CHERRY CREEK FARM FILING NO. TWO
106+00
107+00
108+00
109+00
110+00
111+00
STA 111+40 MATCH LINE SEE SHEET 9
LEGEND
2' GROUTED BOULDER EDGE
3' GROUTED BOULDER EDGE
PROPOSED CREST
PROPOSED CHANNEL CL
5733 PROPOSED MINOR CONTOUR
5733 PROPOSED MAJOR CONTOUR
PROPOSED CONCRETE WINGWALL
PROPOSED CUTOFF WALL
PROPOSED CONCRETE TRAIL
PROPOSED GROUTED BOULDER
PROPOSED TYPE M SOIL RIPRAP
PROTECT EXISTING TREES
NORTH
0
20'
40'
SCALE: 1" = 20' HOR
1" = 5' VER

NOTE:

WORK IS BEING PERFORMED IN EXISTING FIRE LANE. CONTRACTOR SHALL CONTACT FIRE DEPARTMENT PRIOR TO ANY CONSTRUCTION ACTIVITY

5740
5730
5720
5710
DATUM ELEV 5705.00
107+00
108+00
109+00
110+00
111+00
MATCH EXISTING GROUND STA 106+51.87 EL 5717.20
STA 106+77.80 INV EL 5717.35
STA 108+87.80 INV EL 5717.41
STA 107+01.87 EL 5717.50 EL 5716.55
STA 107+19.87 EL 5716.60
STA 107+37.27 EL 5720.95
MATCH EXISTING GROUND STA 107+64.88 EL 5721.12
DROP NO. 1 SEE SHEET 13
0.60%
0.60%
0.60%
4:1
PROPOSED SSMH SEE SHEET 16
10.00 LF 15'X6' 3-SIDED CULVERT
10' TYPE M SOIL RIPRAP
GROUTED BOULDER
5.00' TYPE M SOIL RIPRAP
PROPOSED STORM OUTFALL SEE SHEET 15
7' CUTOFF WALL (TYP.) SEE SHEET 18
EX CENTURY LINK STA 106+73.45
EX SAN MH STA 107+07.52 OFFSET 1.62'R EX RIM 5720.0± EX INV OUT 5709.5±
EX SAN SEWER CROSSING STA 107+27.94 INV 5710.11
EXTEND EX 24" RCP STA 107+46.86 OFF 9.0'R INV 5720.20
EX SAN SEWER CROSSING STA 107+78.67 INV 5711.10
EX 12" PVC SAN @ 1.98%
EXISTING GROUND
STA 108+33.79 EL 5724.65
CONTROL CHECK STA 108+70 EL 5724.92
15.00' TYPE M SOIL RIPRAP
5.00' TYPE M SOIL RIPRAP
0.60%
PROJECTED FUTURE GRADE
EX 19"x30" HERCP STA 109+89.40 OFF 4.7'R TOP 5727.53
EX 8" PVC SAN STA 110+31.71 INV 5718.4
EX 12" CMP STA 110+43.75 OFF 1.9'R INV 5726.9
DROP NO. 2 SEE SHEET 14
BOULDER SILL STA 110+52.13 EL 5726.00 EL 5725.00
STA 110+68.17 EL 5725.07
CREST STA 110+87.13 EL 5729.81
STA. 111+27.06 BEGIN GROUTED BOULDER EDGE T.O.B. EL=5731.54
0.40%
4:1
0.60%
5.00' TYPE M SOIL RIPRAP
GROUTED BOULDER
5.00' TYPE M SOIL RIPRAP
8' CUTOFF WALL (TYP.) SEE SHEET 18
EX 12" PVC SAN
EX 12" PVC TO BE REMOVED STA 110+76.51 OFF 0.8'L INV 5728.25
EX 18" RCP TO BE REMOVED STA 110+81.66 OFF 17.1'R TOP 5731.03
STA 111+40 MATCH LINE SEE SHEET 9

No.	DATE	REVISIONS	APPR.

PROJECT NO. 11-033-GSU-352

PLAN	UTILITIES
DRAWN CR	RESEARCHED DDB
DESIGNED CR	DRAWN DDB
CHECKED MJU	CHECKED DDB

Southeast Metro Stormwater Authority

ICON ENGINEERING, INC.
8100 South Akron Street, Suite 300, Centennial, CO 80112
Phone (303) 221-0802 / Fax (303) 221-4019
WWW.ICONENG.COM

GOLDSMITH GULCH CHANNEL IMPROVEMENTS

CHANNEL PLAN AND PROFILE

DATE
AUG 2012

SHEET
8

LEGEND
2' GROUTED BOULDER EDGE
3' GROUTED BOULDER EDGE
PROPOSED CREST
PROPOSED CHANNEL CL
5733 PROPOSED MINOR CONTOUR
5733 PROPOSED MAJOR CONTOUR
PROPOSED CONCRETE WINGWALL
PROPOSED CUTOFF WALL
PROPOSED CONCRETE TRAIL
PROPOSED GROUTED BOULDER
PROPOSED TYPE M SOIL RIPRAP
PROTECT EXISTING TREES
STA 111+40 MATCH LINE SEE SHEET 8
PEAKVIEW PLACE APARTMENTS
START DOUBLE STACK BOULDERS STA. 111+71.95
END DOUBLE STACK BOULDERS STA. 112+70.32
START DOUBLE STACK BOULDERS STA. 113+14.66
REMOVE, STOCKPILE AND REUSE RIPRAP.
PROPOSED SEDIMENT BASIN
UNINCORPORATED ARAPAHOE COUNTY
CITY OF CENTENNIAL
10' UTILITY AND DRAINAGE EASEMENT
20' UTILITY AND DRAINAGE EASEMENT
309.3' OF 8"PVC @ 2.42%
ASPHALT
TIMBER RET. WALL
5' WALK
112+00
113+00
5732
5734
5735
5736
5737
5738
HEADWALL
RIM=37.18
OUT(N)=24.84
IN(S)=24.94
INLET
OUT(W)=38.54
RIM=43.04
INV.=34.04
RIM=42.68
INV.=34.04
RIM=42.83
FROZEN LID
RIM=42.89
INV.=34.94
E. PEAKVIEW AVE.
APPLETREE CONDOMINIUMS
6"CURB
START DOUBLE STACK BOULDERS STA. 113+14.66
54-LF VERTICAL CURB AND GUTTER SEE SHEET 11
PROPOSED PARKING SEE SHEET 10
STA. 111+70.13 STORM SEWER OUTFALL SEE SHEET 15
STA. 112+53.33 STORM SEWER OUTFALL SEE SHEET 15
LIMITS OF CONSTRUCTION
PROTECT EXISTING FIRE HYDRANT
STA. 114+01.90 END REPLACE IRON FENCE
NORTH
0
20'
40'

SCALE: 1" = 20' HOR
1" = 5' VER

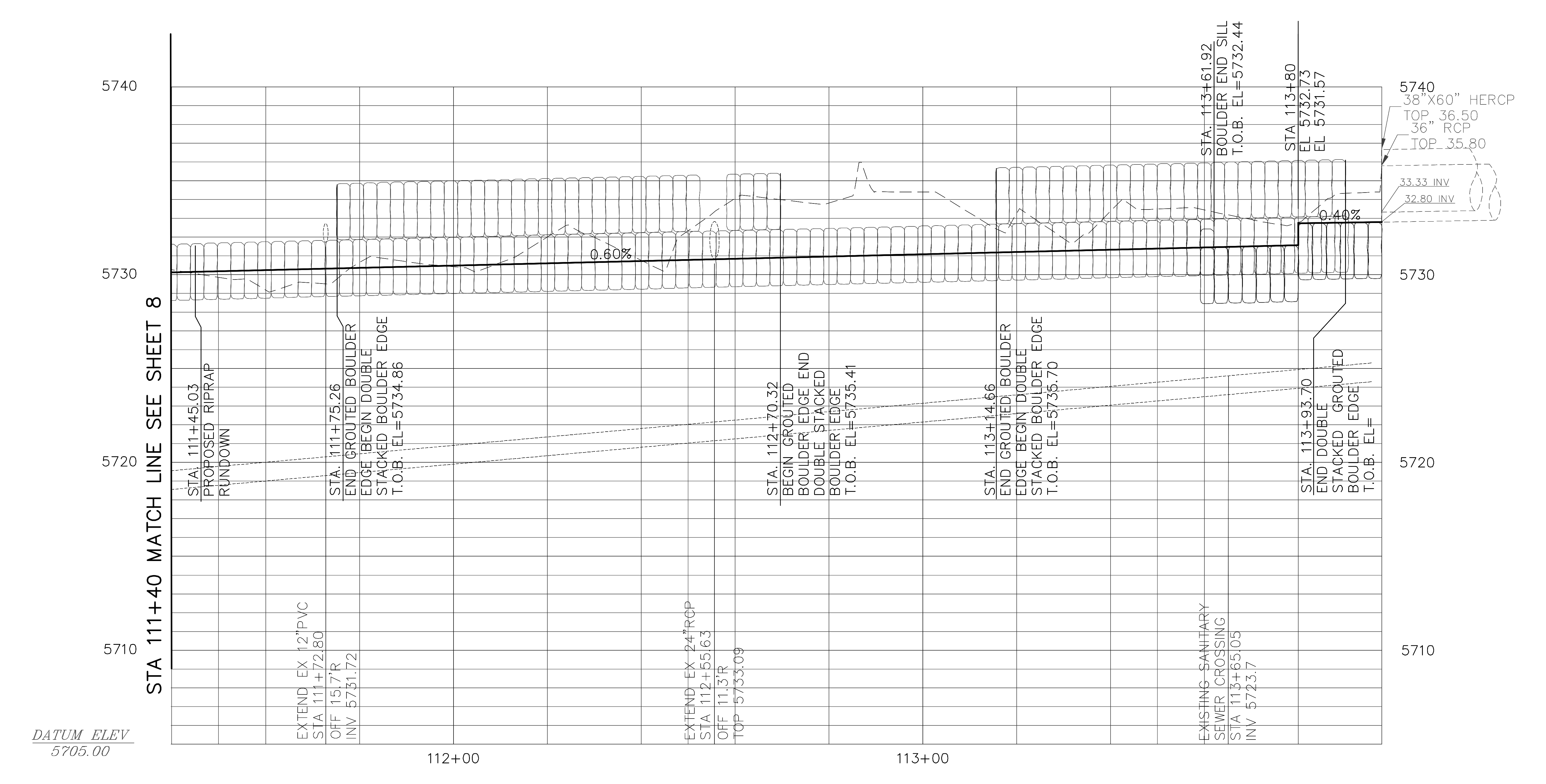
5740
5730
5720
5710
STA 111+40 MATCH LINE SEE SHEET 8
0.60%
0.40%
STA. 111+45.03 PROPOSED RIPRAP RUNDOWN
STA. 111+75.26 END GROUTED BOULDER EDGE BEGIN DOUBLE STACKED BOULDER EDGE T.O.B. EL=5734.86
STA. 112+70.32 BEGIN GROUTED BOULDER EDGE END DOUBLE STACKED BOULDER EDGE T.O.B. EL=5735.41
STA. 113+14.66 END GROUTED BOULDER EDGE BEGIN DOUBLE STACKED BOULDER EDGE T.O.B. EL=5735.70
STA. 113+61.92 BOULDER END SILL T.O.B. EL=5732.44
STA 113+80 EL 5732.73 EL 5731.57
STA. 113+93.70 END DOUBLE STACKED GROUTED BOULDER EDGE T.O.B. EL=
38"X60" HERCP TOP 36.50
36" RCP TOP 35.80
33.33 INV
32.80 INV
EXTEND EX 12"PVC STA 111+72.80 OFF 15.7'R INV 5731.72
EXTEND EX 24"RCP STA 112+55.63 OFF 11.3'R TOP 5733.09
EXISTING SANITARY SEWER CROSSING STA 113+65.05 INV 5723.7
DATUM ELEV 5705.00
112+00
113+00

No.	DATE	REVISIONS	APPR.

PROJECT NO. 11-033-GSU-352

PLAN
DRAWN
CR
DESIGNED
CR
CHECKED
MJU

UTILITIES
RESEARCHED
DDB
DRAWN
DDB
CHECKED
DDB

Southeast Metro Stormwater Authority

URBAN DRAINAGE AND FLOOD CONTROL DISTRICT

ICON
ENGINEERING, INC.
8100 South Akron Street, Suite 300, Centennial, CO 80112
Phone (303) 221-0802 / Fax (303) 221-4019
WWW.ICONENG.COM

GOLDSMITH GULCH CHANNEL IMPROVEMENTS

CHANNEL PLAN AND PROFILE

DATE
AUG 2012

SHEET
9

P:\P\11033GSU\Dwg\FINAL SHEET SET\SHEET-08-09 CALEY CULVERT PLAN & PROFILE.dwg, 10/17/2012 9:25:21 AM, dbernier, AcroPlot.pc3, 1:1

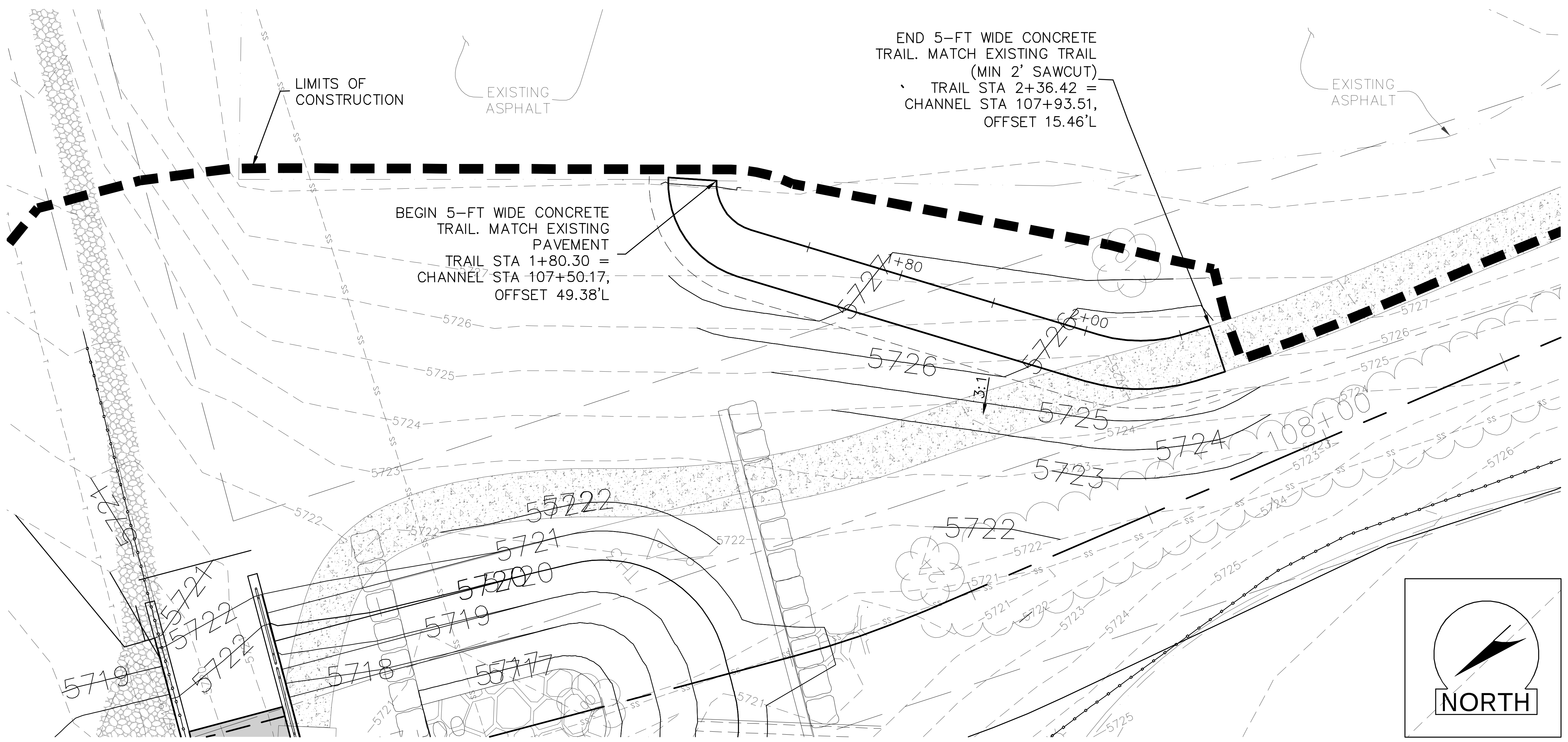
LIMITS OF CONSTRUCTION
EXISTING ASPHALT
END 5-FT WIDE CONCRETE TRAIL. MATCH EXISTING TRAIL (MIN 2' SAWCUT) TRAIL STA 2+36.42 = CHANNEL STA 107+93.51, OFFSET 15.46'L
EXISTING ASPHALT
BEGIN 5-FT WIDE CONCRETE TRAIL. MATCH EXISTING PAVEMENT TRAIL STA 1+80.30 = CHANNEL STA 107+50.17, OFFSET 49.38'L
1+80
2+00
3:1
5726
5725
5724
5723
5722
5721
5720
5719
5718
5717
108+00
NORTH

5-FT WIDE CONCRETE TRAIL (NORTH)

1" = 10'

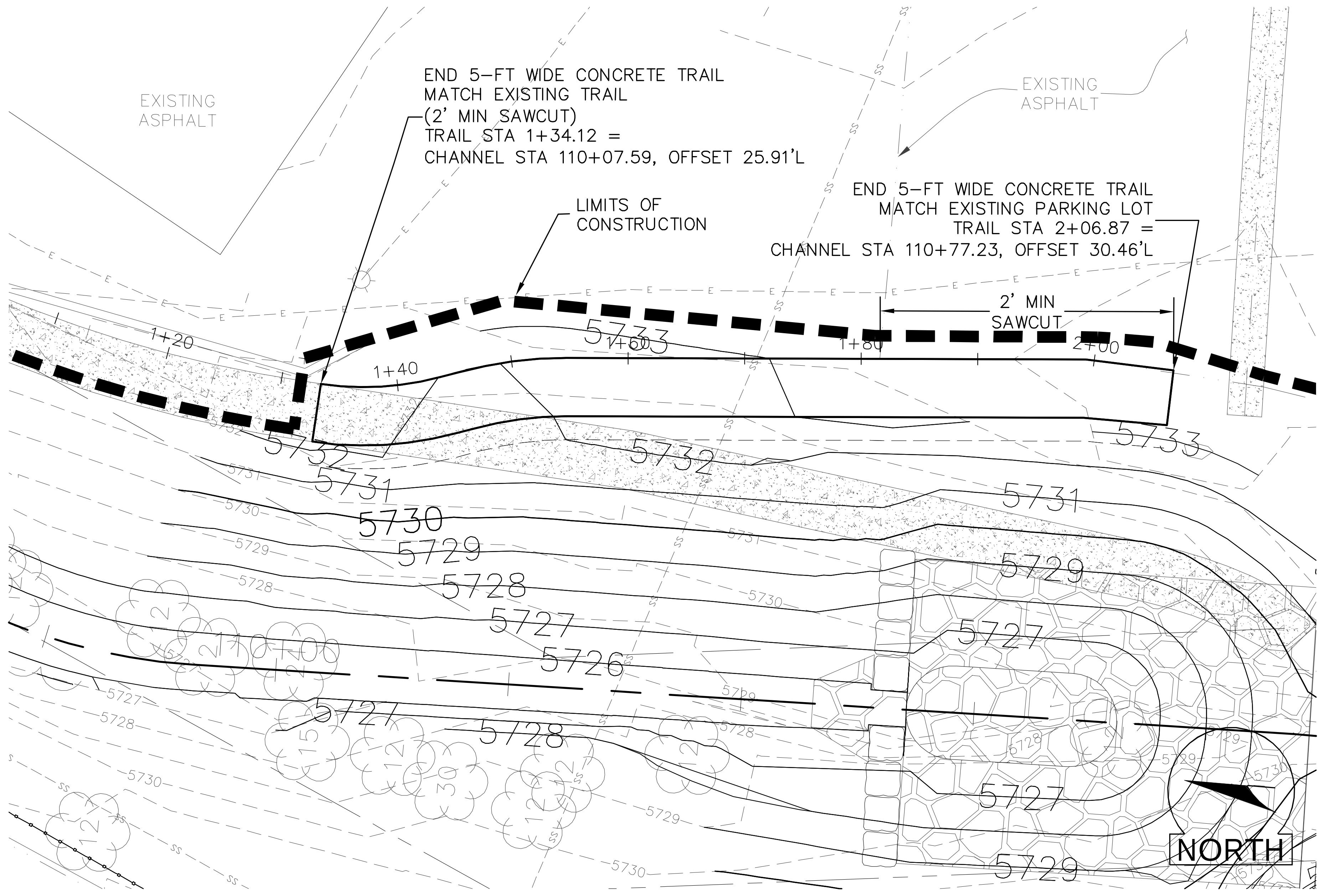
EXISTING ASPHALT
END 5-FT WIDE CONCRETE TRAIL MATCH EXISTING TRAIL (2' MIN SAWCUT) TRAIL STA 1+34.12 = CHANNEL STA 110+07.59, OFFSET 25.91'L
EXISTING ASPHALT
LIMITS OF CONSTRUCTION
END 5-FT WIDE CONCRETE TRAIL MATCH EXISTING PARKING LOT TRAIL STA 2+06.87 = CHANNEL STA 110+77.23, OFFSET 30.46'L
2' MIN SAWCUT
1+20
1+40
1+80
2+00
5733
5732
5731
5730
5729
5728
5727
5726
111+00
NORTH

5-FT WIDE CONCRETE TRAIL (MIDDLE)

1" = 10'

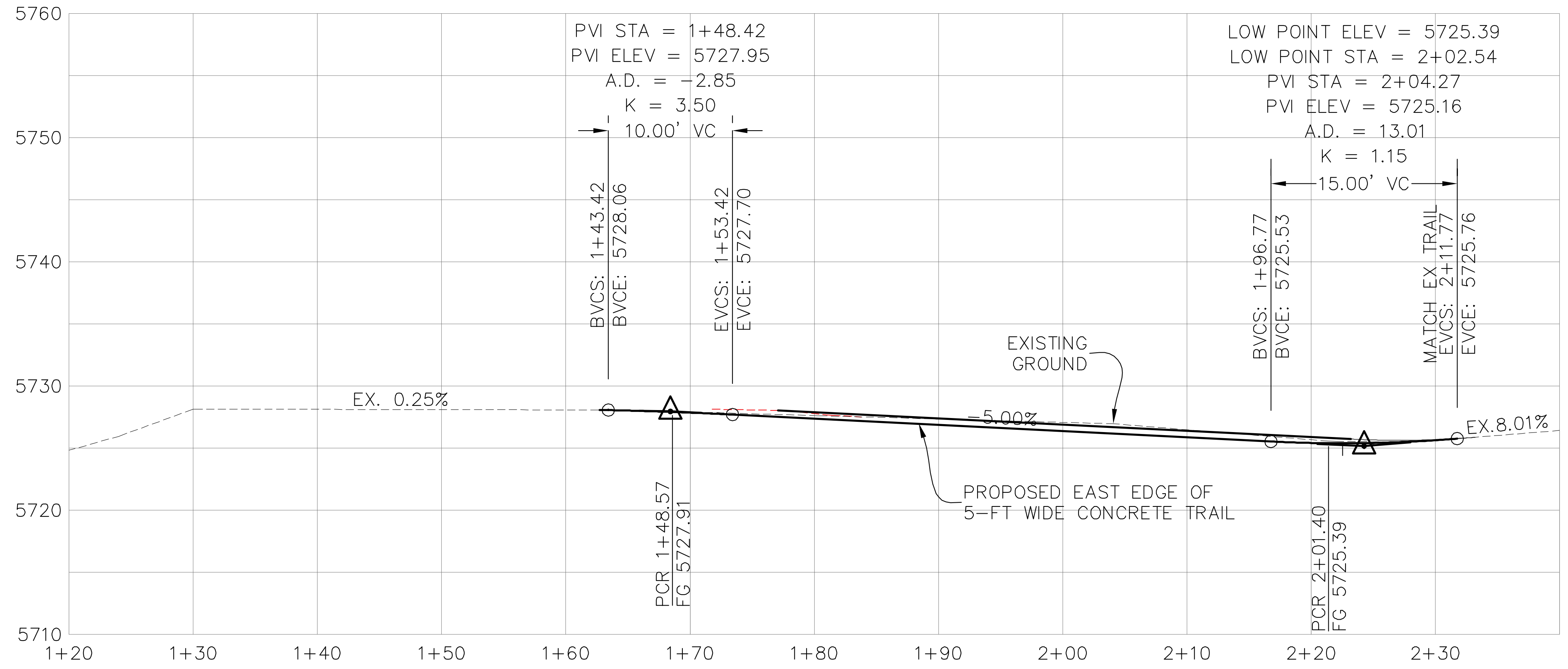

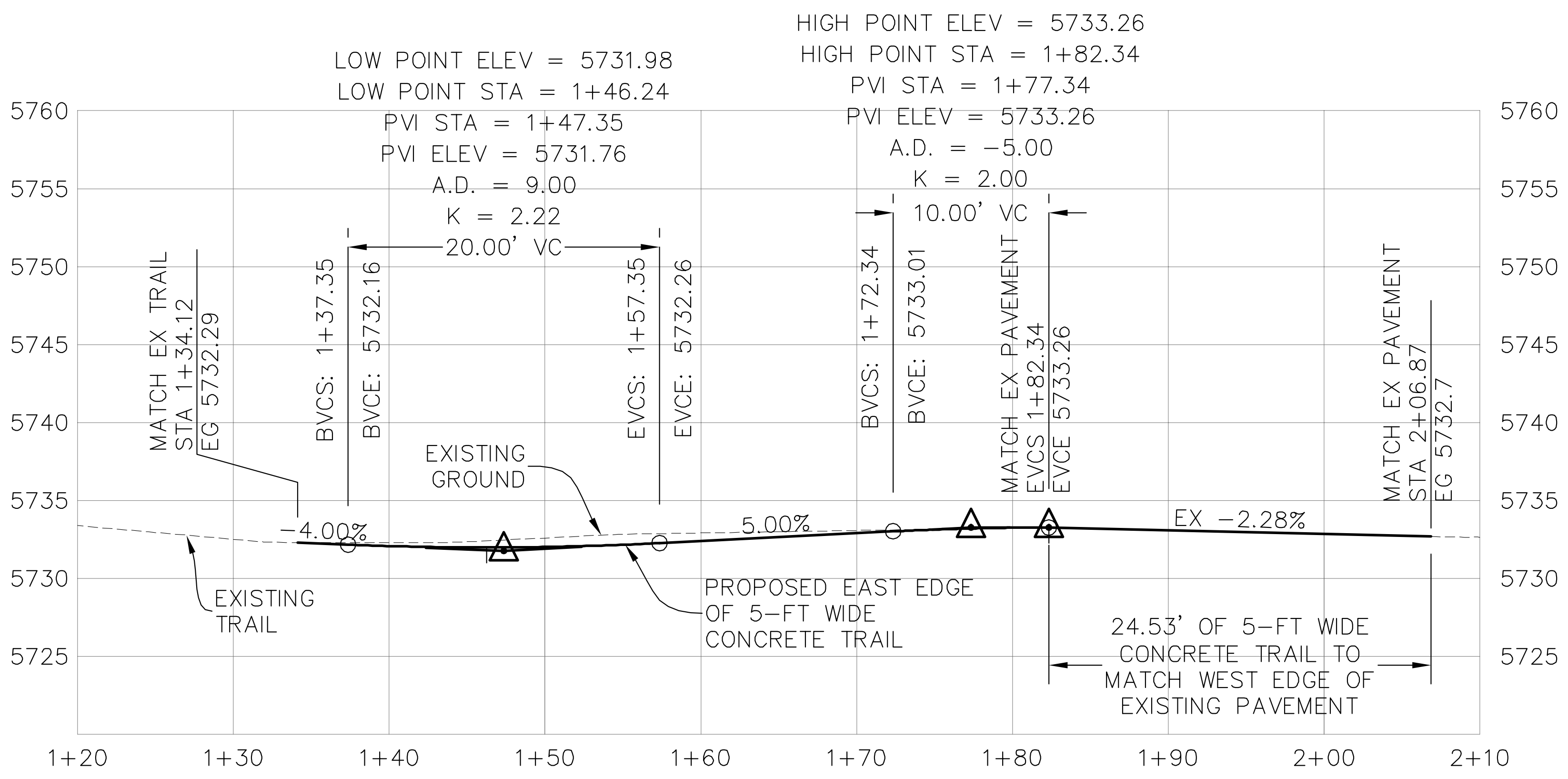

No.	DATE	REVISIONS	APPR.

PROJECT NO. 11-033-GSU-352

PLAN
DRAWN CR
DESIGNED CR
CHECKED MJU

UTILITIES
RESEARCHED DDB
DRAWN DDB
CHECKED DDB

Southeast Metro Stormwater Authority

ICON
ENGINEERING, INC.
8100 South Akron Street, Suite 300, Englewood, CO 80112
Phone (303) 221-0802 / Fax (303) 221-4019
WWW.ICONENG.COM

GOLDSMITH GULCH CHANNEL IMPROVEMENTS

TRAIL PLAN AND PROFILE

DATE
AUG 2012

SHEET
10

P:\P\11033GSU\Dwg\FINAL SHEET SET\SHEET-10 TRAIL DETAILS.dwg, 10/17/2012 9:29:36 AM, dbernier, AcroPlot.pc3, 1:1

5732
5732
5732
5732
5734
5735
5736
NORTH
5'x17' BURIED
TYPE L
SOIL RIPRAP
PARKING FL
STA 111+44.71
OFFSET 21.24'R
FL 5735.18
5734
INSTALL 1.5'
CURB CUT
5735
6-IN
VERTICAL CURB
A
PARKING FL
STA 112+48.17
OFFSET 18.97'R
FL 5736.20
100.00'
1.0%
1.7%
4.4%
8.00'
2.2%
20.00'
5 EA~ 20' x 8'
PARKING SPACES
5735
5736
REMOVE AND DISPOSE OF
EXISTING SIDEWALK
MATCH EXISTING FL
STA 111+39.82
OFFSET 29.31'R
4-IN SINGLE
WHITE LINE
18-IN CURB CUT
STA 111+74.72
OFFSET 22.17'R
FL 5734.95
A
MATCH EXISTING
EDGE OF PAVEMENT
2' MIN SAWCUT
MATCH EXISTING FL
STA 112+49.73
OFFSET 27.57'R
REMOVE AND DISPOSE OF
EXISTING SIDEWALK

PARKING PLAN

1" = 5'

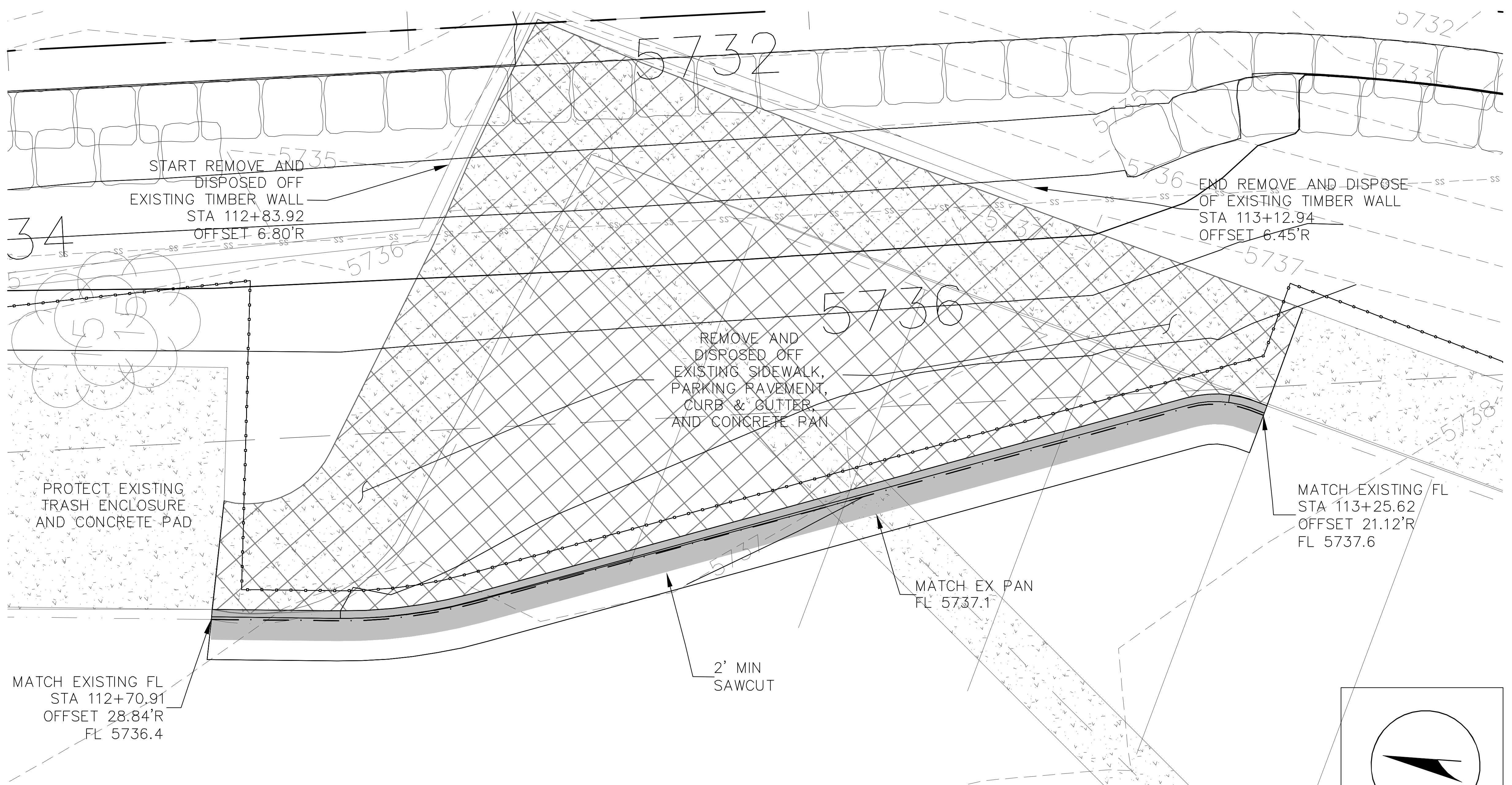
5732
START REMOVE AND
DISPOSED OFF
EXISTING TIMBER WALL
STA 112+83.92
OFFSET 6.80'R
END REMOVE AND DISPOSE
OF EXISTING TIMBER WALL
STA 113+12.94
OFFSET 6.45'R
5736
REMOVE AND
DISPOSED OFF
EXISTING SIDEWALK,
PARKING PAVEMENT,
CURB & GUTTER,
AND CONCRETE PAN
PROTECT EXISTING
TRASH ENCLOSURE
AND CONCRETE PAD
MATCH EXISTING FL
STA 113+25.62
OFFSET 21.12'R
FL 5737.6
MATCH EX PAN
FL 5737.1
2' MIN
SAWCUT
MATCH EXISTING FL
STA 112+70.91
OFFSET 28.84'R
FL 5736.4
NORTH

VERTICAL CURB & GUTTER (TYP)

1" = 5'

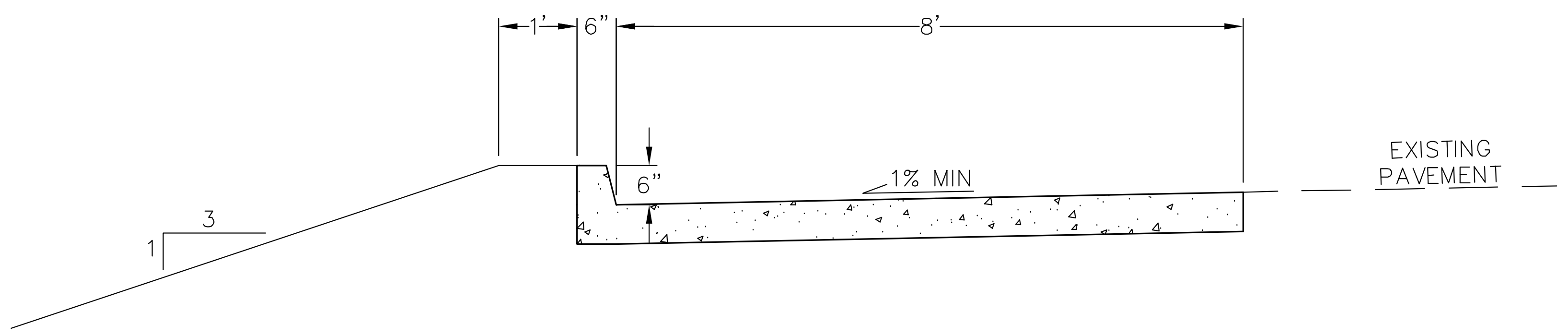
1'
6"
8'
6"
1% MIN
EXISTING
PAVEMENT
3
1

SECTION 'A-A'

1" = 2'

No.	DATE	REVISIONS	APPR.

PROJECT NO. 11-033-GSU-352

PLAN
DRAWN
CR
DESIGNED
CR
CHECKED
MJU

UTILITIES
RESEARCHED
DDB
DRAWN
DDB
CHECKED
DDB

Southeast Metro Stormwater Authority

URBAN DRAINAGE AND FLOOD CONTROL DISTRICT

ICON
ENGINEERING, INC.
8100 South Akron Street, Suite 300, Englewood, CO 80112
Phone (303) 221-0802 / Fax (303) 221-4019
WWW.ICONENG.COM

GOLDSMITH GULCH CHANNEL IMPROVEMENTS

PARKING PLAN AND CURB & GUTTER
DETAILED GRADING

DATE
AUG 2012

SHEET
11

P:\P\11033GSU\Dwg\FINAL SHEET SET\SHEET-11 PARKING DETAILED GRADING.dwg, 10/17/2012 9:31:29 AM, dbernier, AcroPlot.pc3, 1:1

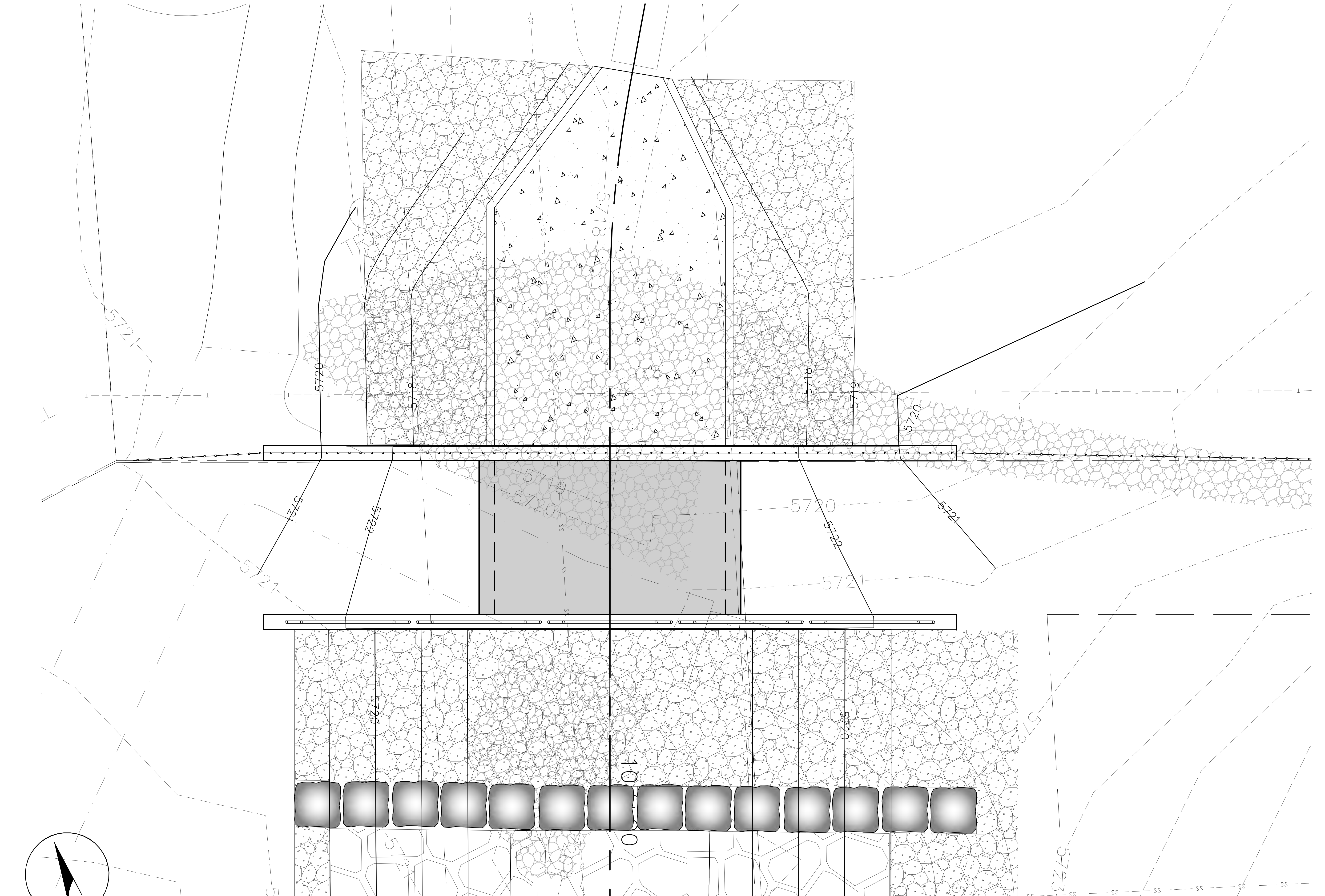
5721
5720
5718
5719
5722
5723
5724
NORTH

PLAN VIEW
SCALE: 1" = 5'

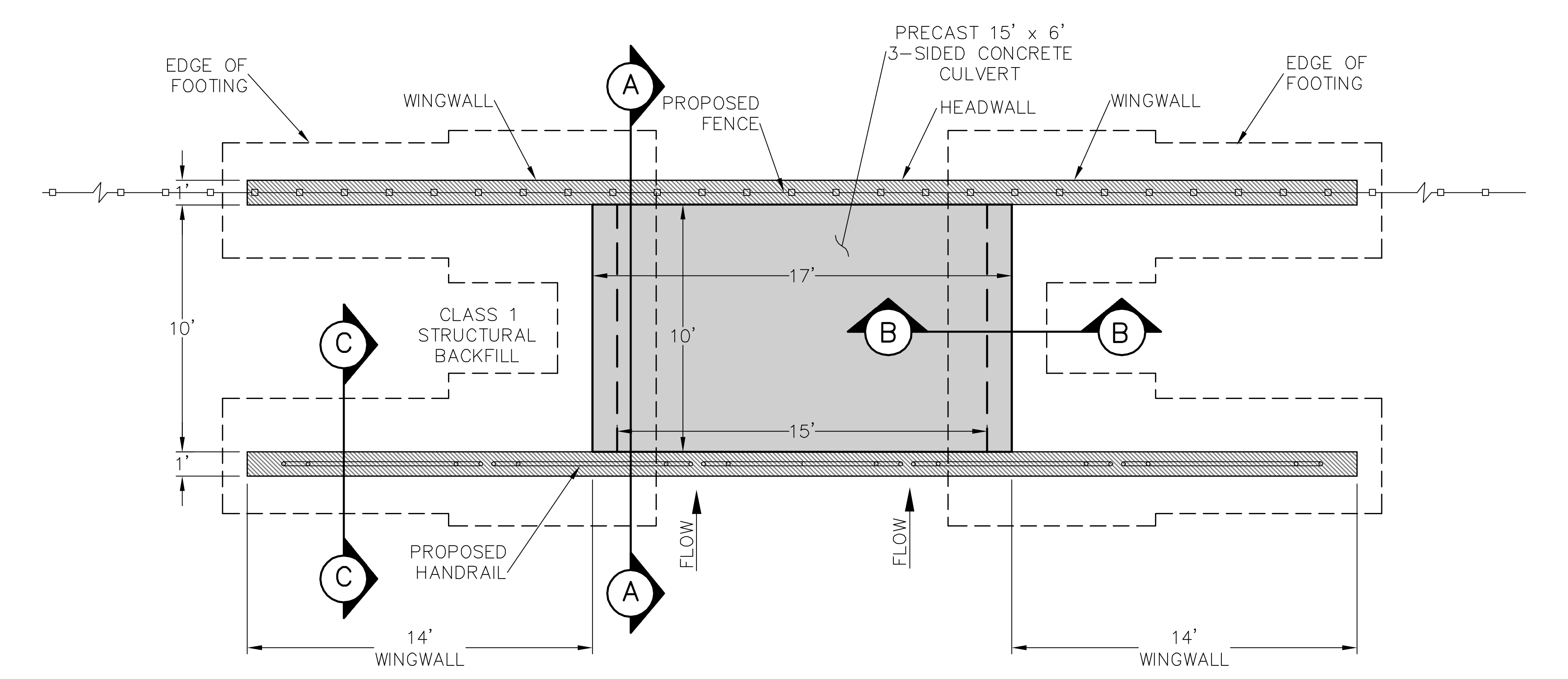
EDGE OF FOOTING
WINGWALL
A
PROPOSED FENCE
PRECAST 15' x 6' 3–SIDED CONCRETE CULVERT
HEADWALL
WINGWALL
EDGE OF FOOTING
1'
10'
17'
10'
CLASS 1 STRUCTURAL BACKFILL
C
B
B
15'
1'
FLOW
FLOW
PROPOSED HANDRAIL
C
A
14' WINGWALL
14' WINGWALL

DETAILED PLAN VIEW
SCALE: 1" = 5'

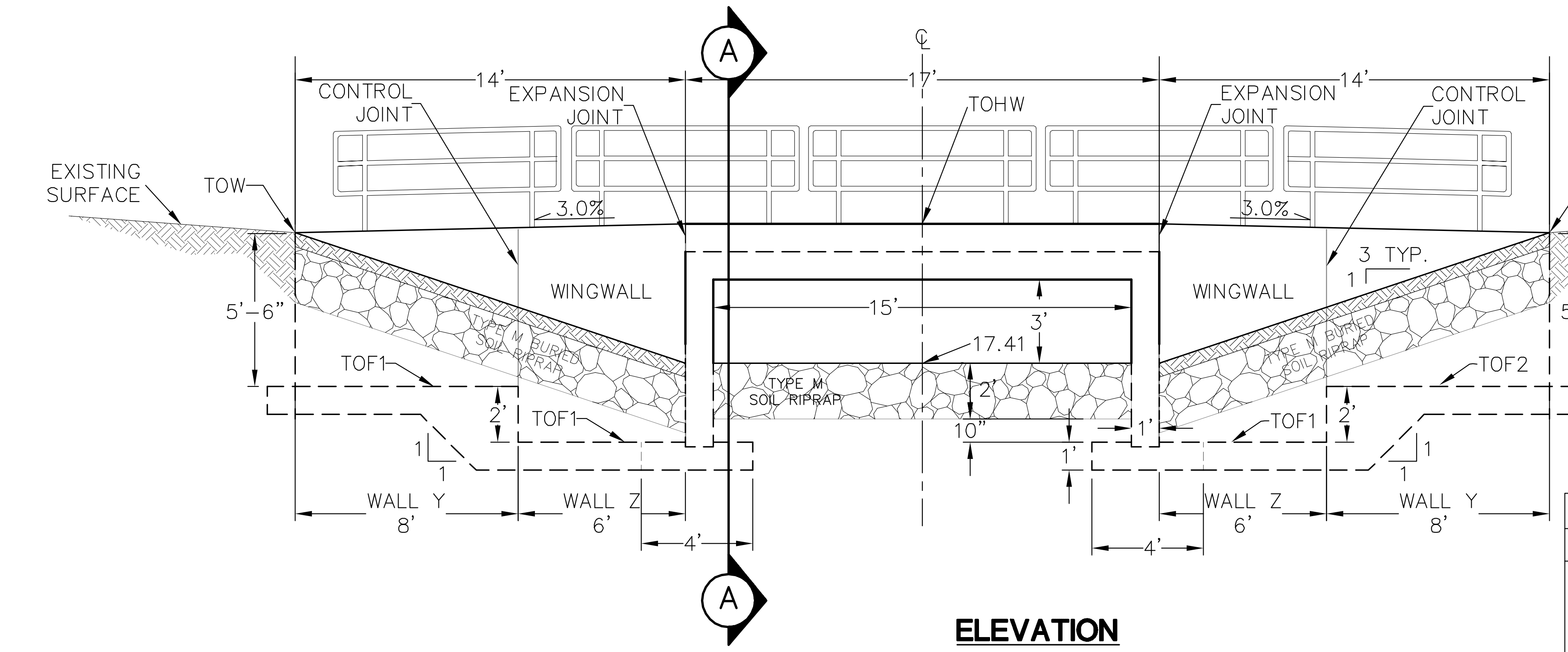
A
℄
CONTROL JOINT
14'
EXPANSION JOINT
17'
TOHW
EXPANSION JOINT
14'
CONTROL JOINT
EXISTING SURFACE
TOW
3.0%
3.0%
TOW
EXISTING SURFACE
3 TYP.
1
5'–6"
WINGWALL
15'
WINGWALL
5'–6"
3'
17.41
TYPE M SOIL RIPRAP
2'
TOF1
TOF1
10'
TOF1
TOF2
2'
1
1'
1'
2'
1
1
WALL Y 8'
WALL Z 6'
4'
4'
WALL Z 6'
WALL Y 8'
A

ELEVATION
SCALE: 1" = 5'

ELEVATIONS		
	U/S	D/S
TOF1	14.58	14.52
TOF2	16.58	16.52
TOHW	22.41	22.35
TOW	22.08	22.02

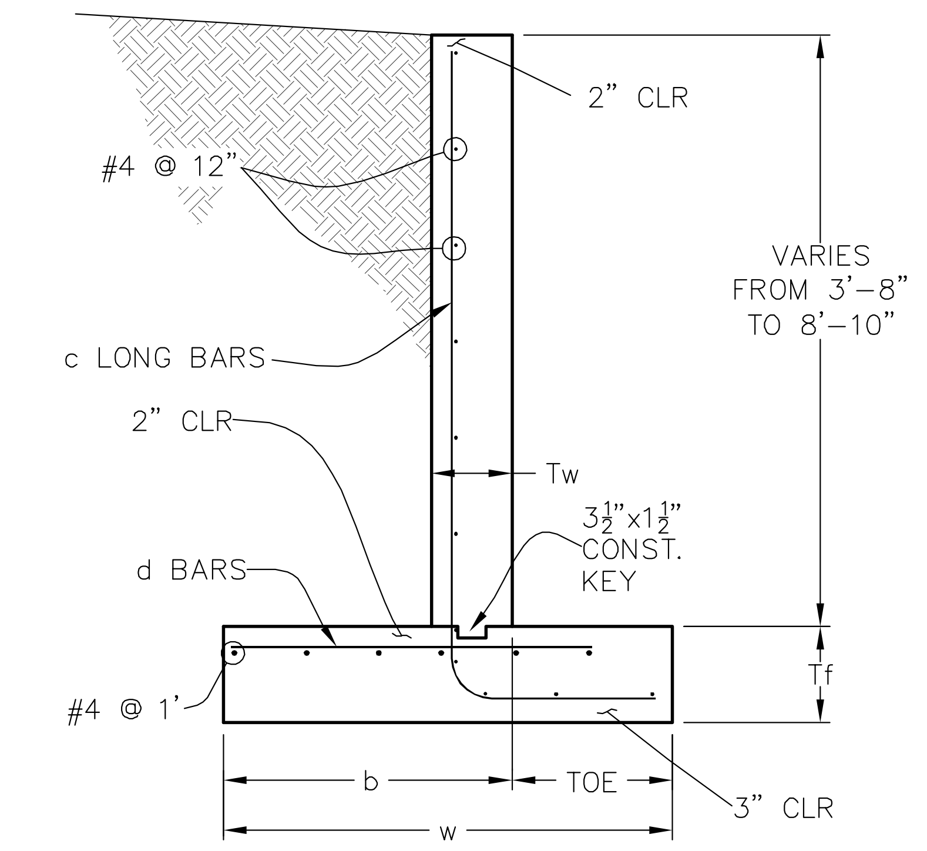
2" CLR
#4 @ 12"
VARIES FROM 3'–8" TO 8'–10"
c LONG BARS
2" CLR
Tw
3½"x1½" CONST. KEY
d BARS
Tf
#4 @ 1'
b
TOE
3" CLR
w

WALL DESIGNATION	WALL Y	WALL Z
TOE	1'-10"	2'-2"
b	3'-2"	3'-10"
w	5'-0"	6'-0"
Tf	12"	12"
Tw	12"	12"
c & d BARS	#4 @1'-6"	#5 @1'-2"

SECTION 'C-C' WINGWALL
SCALE: ½" = 1'

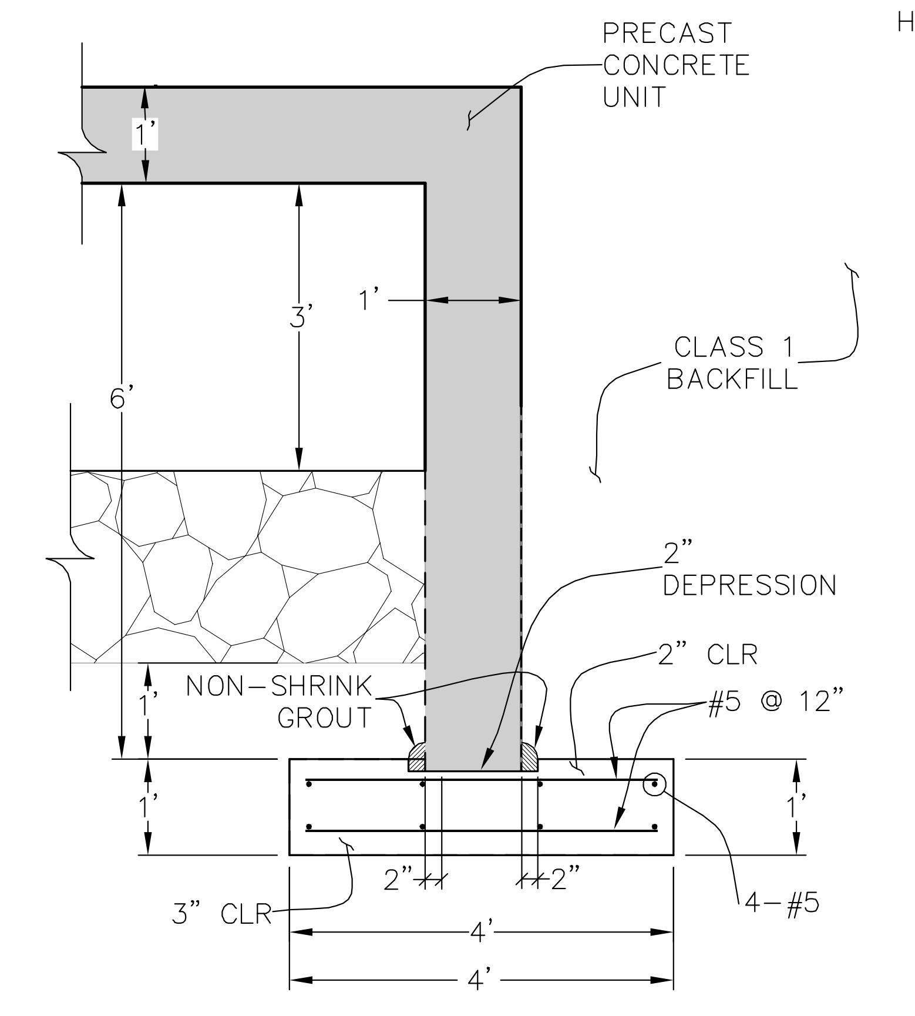
PRECAST CONCRETE UNIT
1'
1'
3'
6'
CLASS 1 BACKFILL
2" DEPRESSION
2" CLR
NON–SHRINK GROUT
#5 @ 12"
1'
1'
3" CLR
2"
2"
4–#5
4'
4'

SECTION 'B-B'
SCALE: ½" = 1'

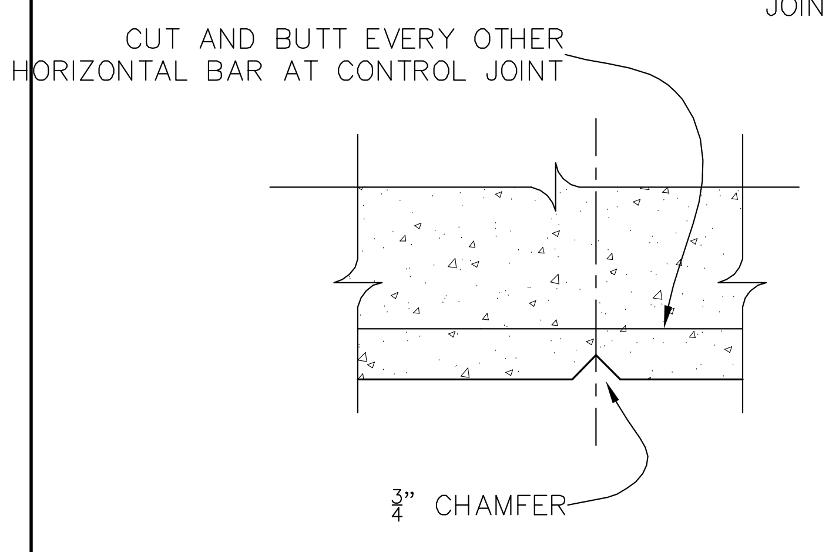
CUT AND BUTT EVERY OTHER HORIZONTAL BAR AT CONTROL JOINT
¾" CHAMFER

CONTROL JOINT DETAIL
SCALE: ½" = 1'

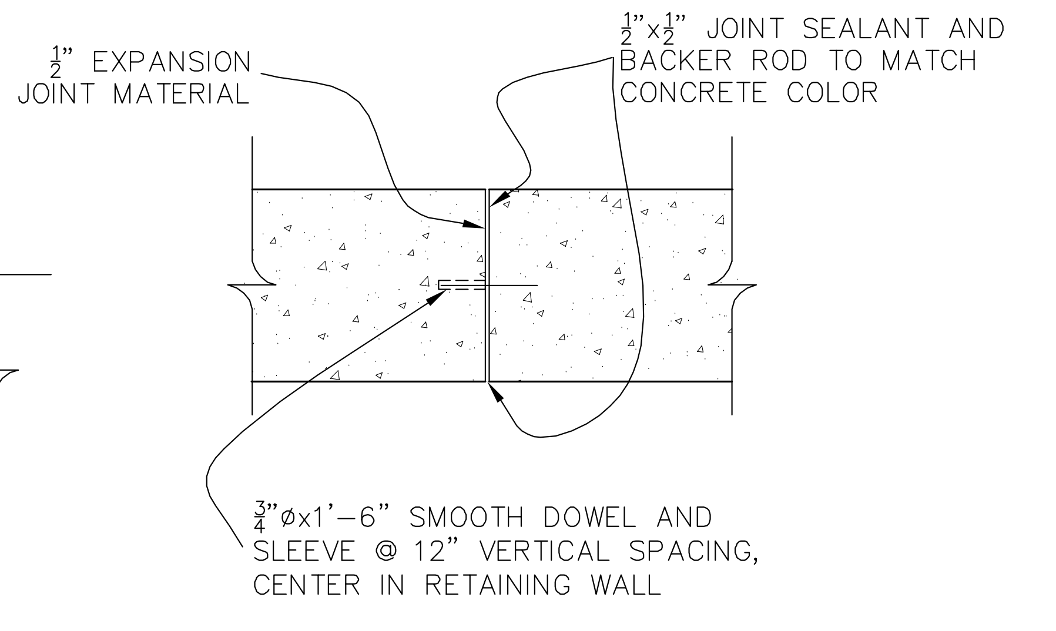
¾" EXPANSION JOINT MATERIAL
¾"x¾" JOINT SEALANT AND BACKER ROD TO MATCH CONCRETE COLOR
¾"ø x1'–6" SMOOTH DOWEL AND SLEEVE @ 12" VERTICAL SPACING, CENTER IN RETAINING WALL

EXPANSION JOINT DETAIL
SCALE: ½" = 1'

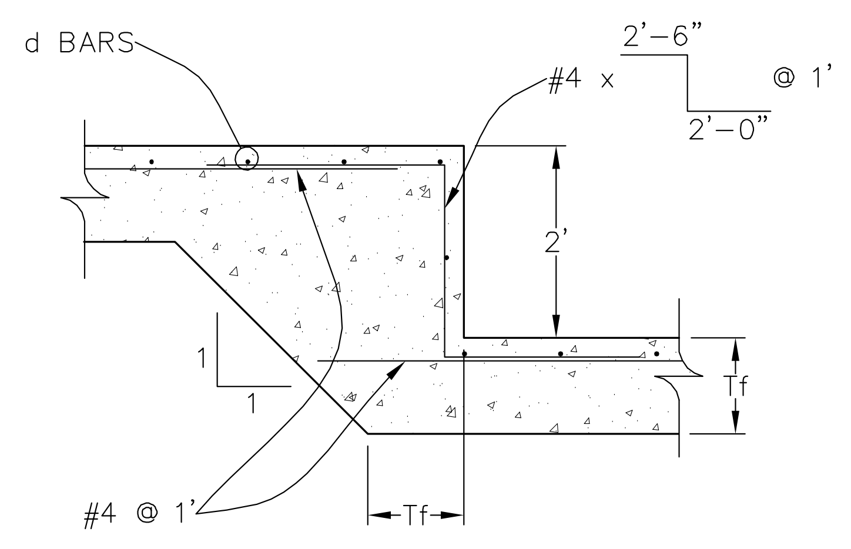
d BARS
2'–6"
#4 x
@ 1'
2'–0"
2'
1
1
Tf
#4 @ 1'
Tf

FOOTING STEP DETAIL
SCALE: ½" = 1'

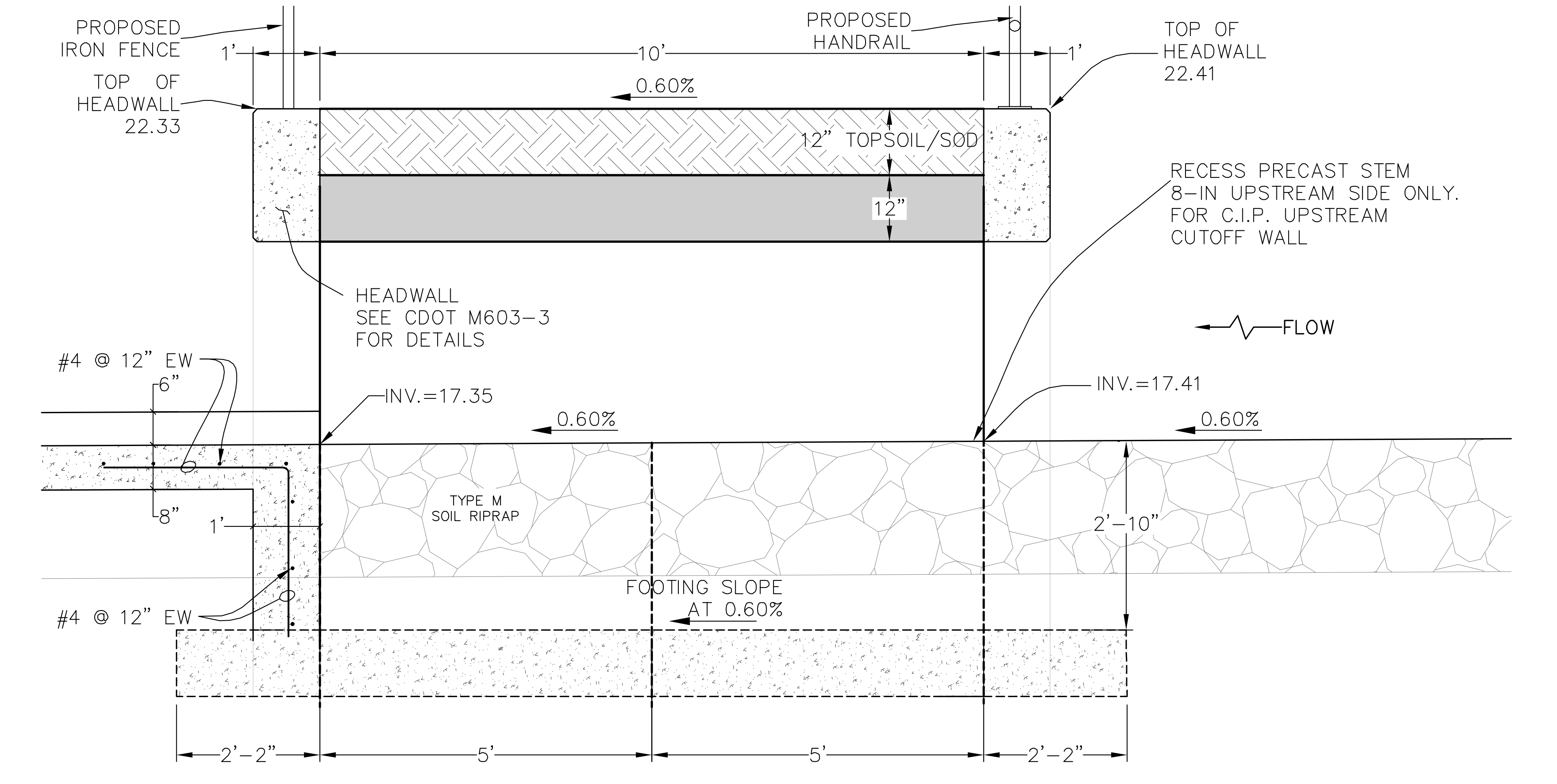
PROPOSED IRON FENCE
1'
10'
PROPOSED HANDRAIL
1'
TOP OF HEADWALL 22.41
TOP OF HEADWALL 22.33
0.60%
12" TOPSOIL/SOD
12"
RECESS PRECAST STEM 8–IN UPSTREAM SIDE ONLY. FOR C.I.P. UPSTREAM CUTOFF WALL
HEADWALL SEE CDOT M603–3 FOR DETAILS
FLOW
#4 @ 12" EW
6"
INV.=17.35
INV.=17.41
0.60%
0.60%
TYPE M SOIL RIPRAP
8"
1'
2'–10"
FOOTING SLOPE AT 0.60%
#4 @ 12" EW
2'–2"
5'
5'
2'–2"

SECTION 'A-A'
SCALE: ½" = 1'

No.	DATE	REVISIONS	APPR.

PROJECT NO. 10-012-GSG-352

PLAN	UTILITIES
	RESEARCHED
DRAWN	DDB
CR	DRAWN
DESIGNED	DDB
CR	CHECKED
CHECKED	DDB
MJU	

Southeast Metro Stormwater Authority

ICON
ENGINEERING, INC.
8100 South Akron Street, Suite 300, Englewood, CO 80112
Phone (303) 221-0802 / Fax (303) 221-4019
WWW.ICONENG.COM

GOLDSMITH GULCH CHANNEL IMPROVEMENTS

PRECAST3-SIDED CULVERT PLAN AND SECTIONS
HEADWALL AND WINGWALL DETAILS

DATE
AUG 2012

SHEET
12

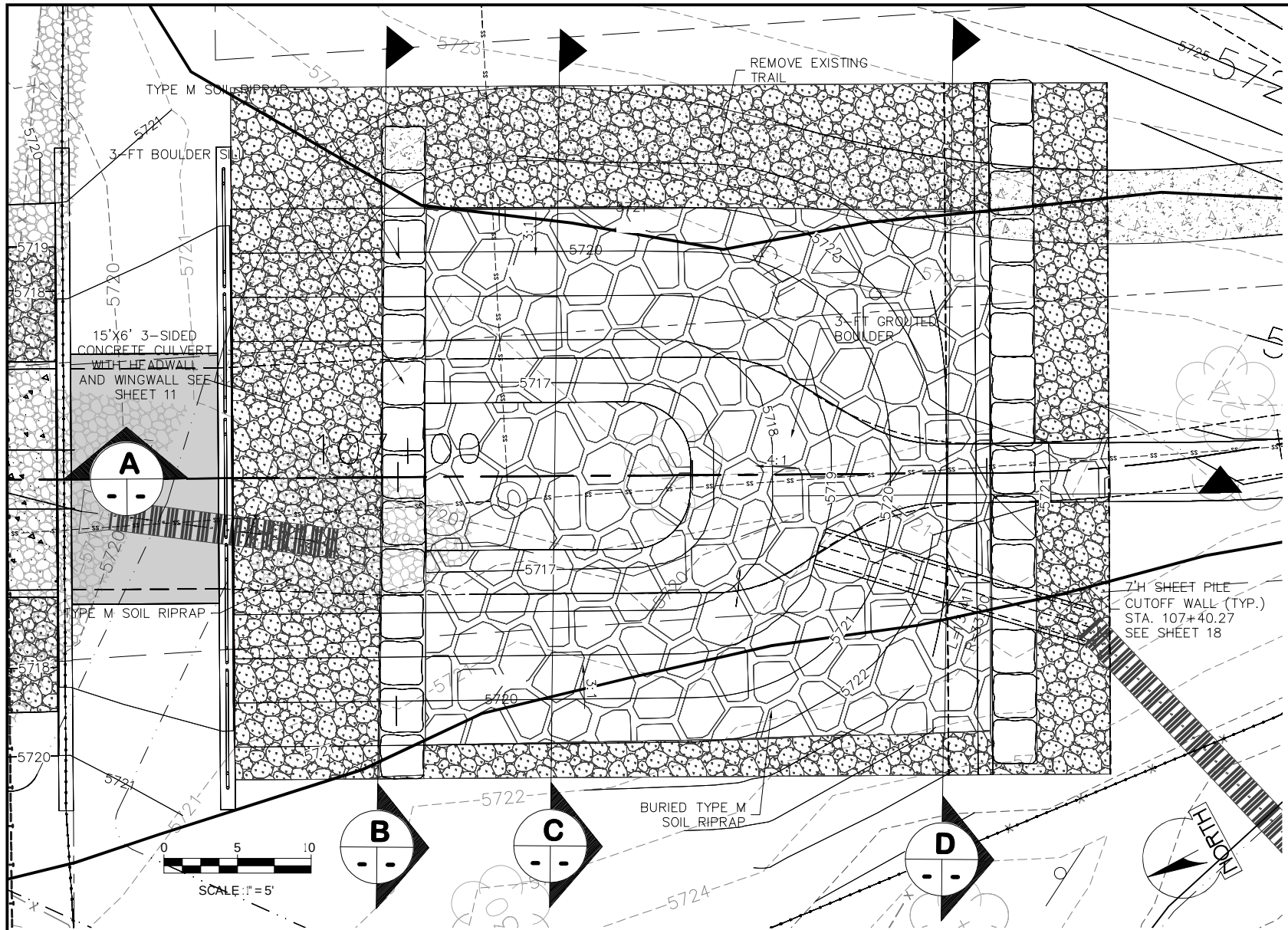
TYPE M SOIL RIPRAP
3-FT BOULDER SILL
REMOVE EXISTING TRAIL
15'X6' 3-SIDED CONCRETE CULVERT WITH HEADWALL AND WINGWALL SEE SHEET 11
3-FT GROUTED BOULDER
TYPE M SOIL RIPRAP
7'H SHEET PILE CUTOFF WALL (TYP.) STA. 107+40.27 SEE SHEET 18
BURIED TYPE M SOIL RIPRAP
A
B
C
D
4:1
3:1
5717
5718
5719
5720
5721
5722
5723
5724
5725
NORTH
0
5
10
SCALE 1"=5'

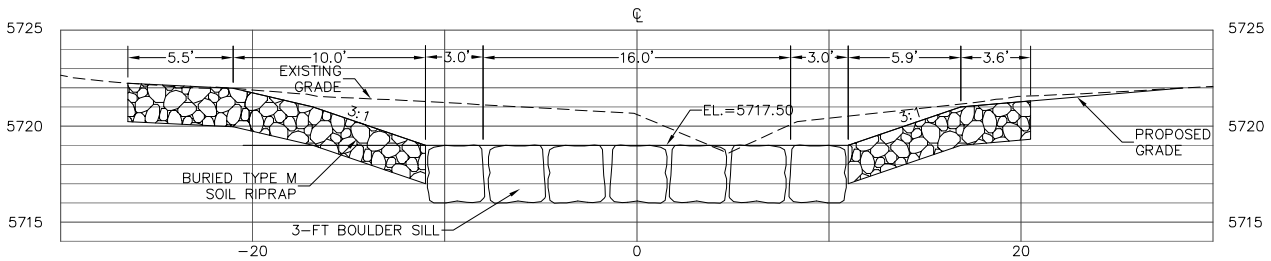
℄
5.5'
10.0'
3.0'
16.0'
3.0'
5.9'
3.6'
EXISTING GRADE
EL.=5717.50
3:1
PROPOSED GRADE
BURIED TYPE M SOIL RIPRAP
3-FT BOULDER SILL
5725
5720
5715
-20
0
20

B
SECTION B
SCALE 1"=10'

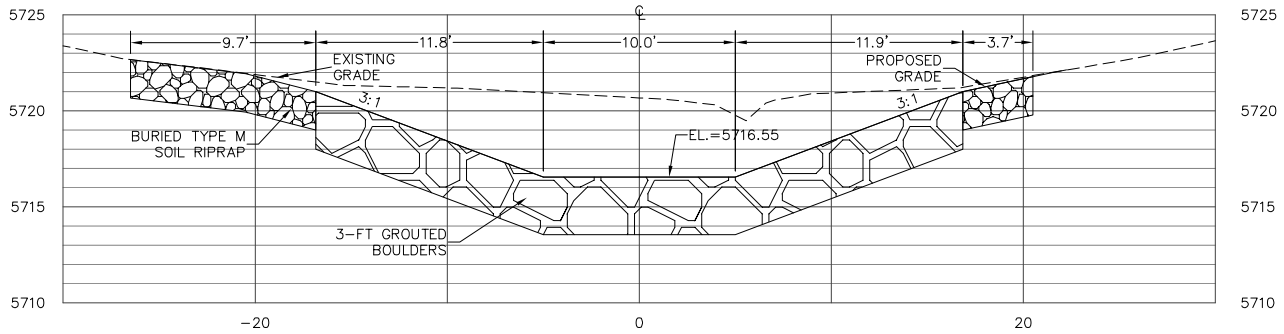
℄
9.7'
11.8'
10.0'
11.9'
3.7'
EXISTING GRADE
PROPOSED GRADE
3:1
EL.=5716.55
BURIED TYPE M SOIL RIPRAP
3-FT GROUTED BOULDERS
5725
5720
5715
5710
-20
0
20

C
SECTION C
SCALE 1"=10'

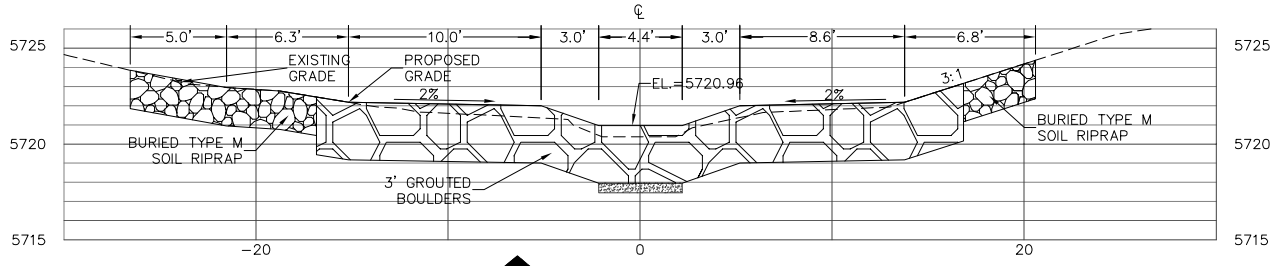
℄
5.0'
6.3'
10.0'
3.0'
4.4'
3.0'
8.6'
6.8'
EXISTING GRADE
PROPOSED GRADE
2%
EL.=5720.96
3:1
BURIED TYPE M SOIL RIPRAP
3' GROUTED BOULDERS
5725
5720
5715
-20
0
20

D
SECTION D
SCALE 1"=10'

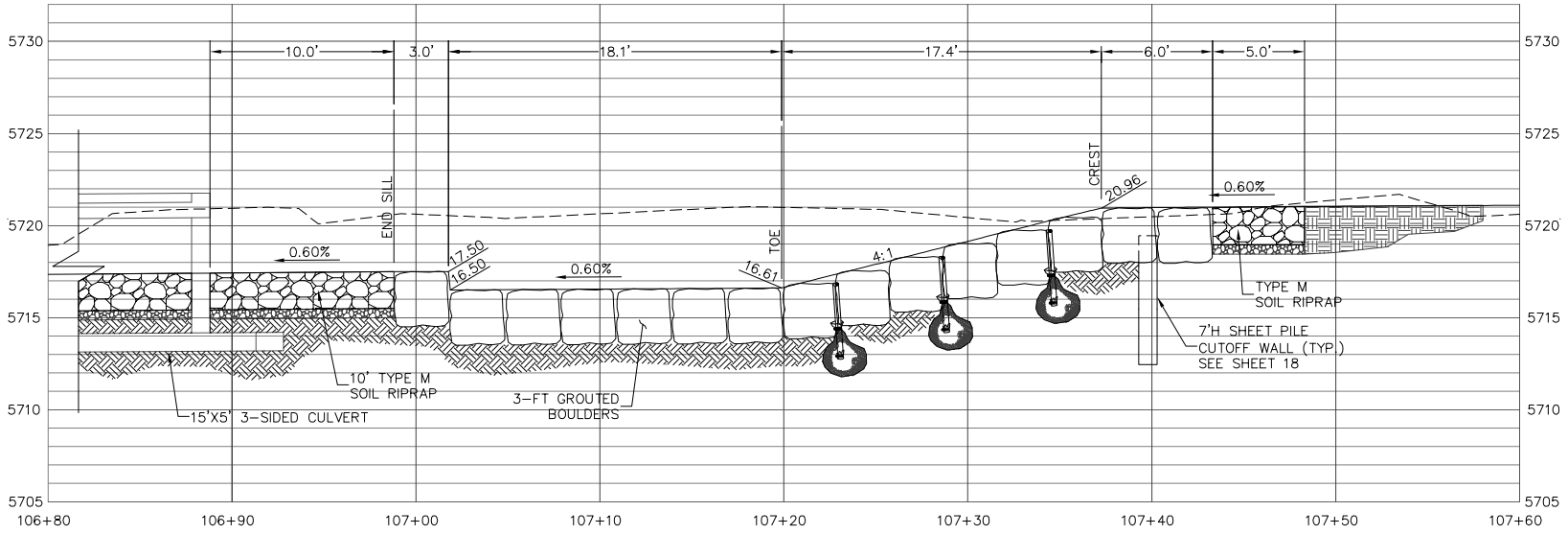
10.0'
3.0'
18.1'
17.4'
6.0'
5.0'
END SILL
TOE
CREST
0.60%
17.50
16.50
16.61
4:1
20.96
TYPE M SOIL RIPRAP
7'H SHEET PILE CUTOFF WALL (TYP.) SEE SHEET 18
10' TYPE M SOIL RIPRAP
3-FT GROUTED BOULDERS
15'X5' 3-SIDED CULVERT
5730
5725
5720
5715
5710
5705
106+80
106+90
107+00
107+10
107+20
107+30
107+40
107+50
107+60

A
SECTION A
SCALE 1"=5'

No.	DATE	REVISIONS	APPR.

11-033-GSU-352

PLAN	UTILITIES
DRAWN SV	RESEARCHED DDB
DESIGNED CR	DRAWN DDB
CHECKED MJU	CHECKED DDB

Southeast Metro Stormwater Authority

ICON
ENGINEERING, INC.
8100 South Akron Street, Suite 300, Centennial, CO 80112
Phone (303) 221-0802 / Fax (303) 221-4019
WWW.ICONENG.COM

GOLDSMITH GULCH CHANNEL IMPROVEMENTS

GROUTED SLOPING BOULDER DROP NO. 1
CROSS-SECTIONS

DATE
AUG 2012

SHEET
13

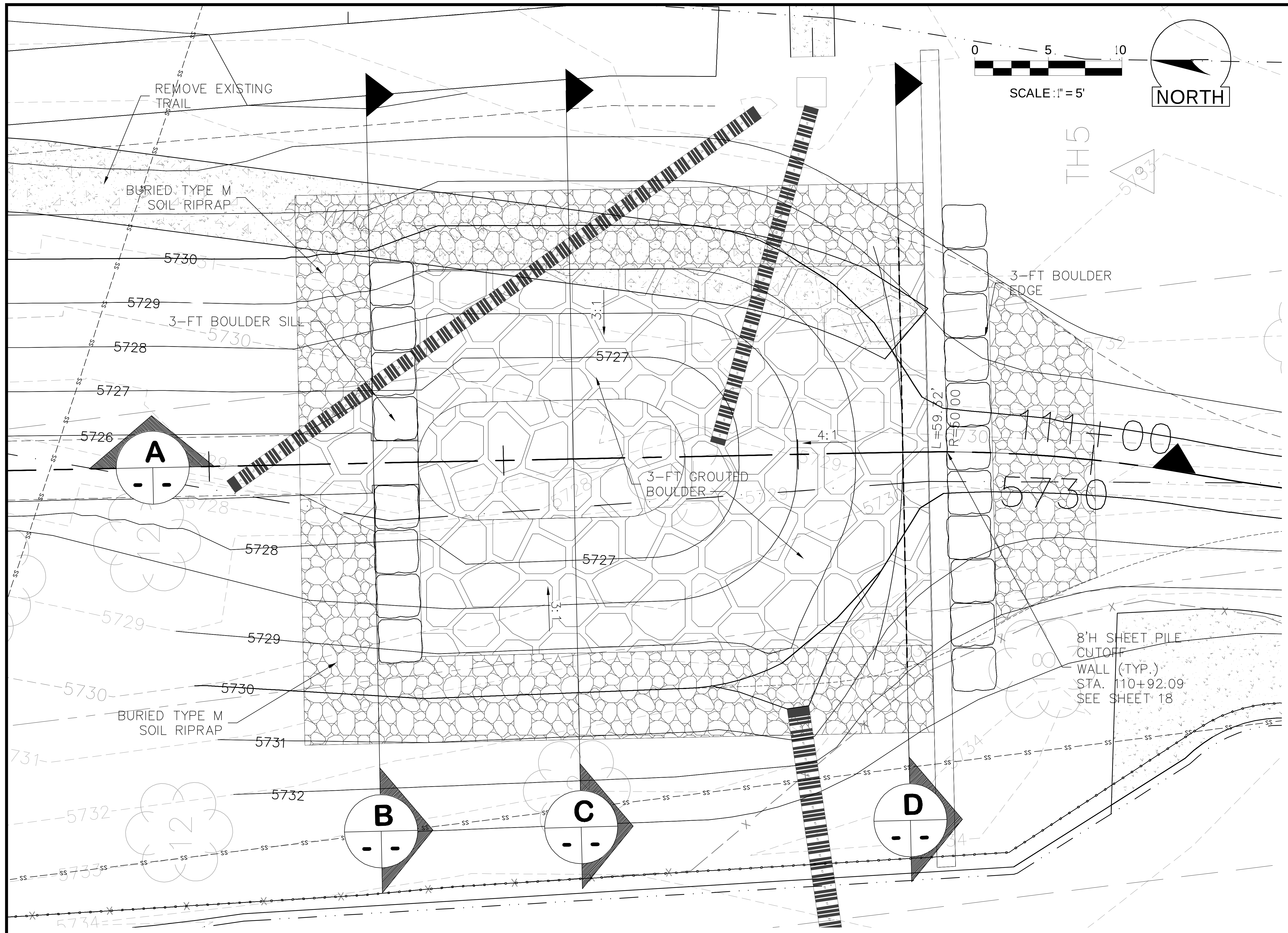
REMOVE EXISTING TRAIL
BURIED TYPE M SOIL RIPRAP
3-FT BOULDER SILL
3-FT BOULDER EDGE
3-FT GROUTED BOULDER
8'H SHEET PILE CUTOFF WALL (TYP.) STA. 110+92.09 SEE SHEET 18
BURIED TYPE M SOIL RIPRAP
5726
5727
5728
5729
5730
5731
5732
5727
5727
3:1
4:1
L=59.52'
R=50.00'
111+00
5730
TH5
A
B
C
D
0 5 10
SCALE: 1" = 5'
NORTH

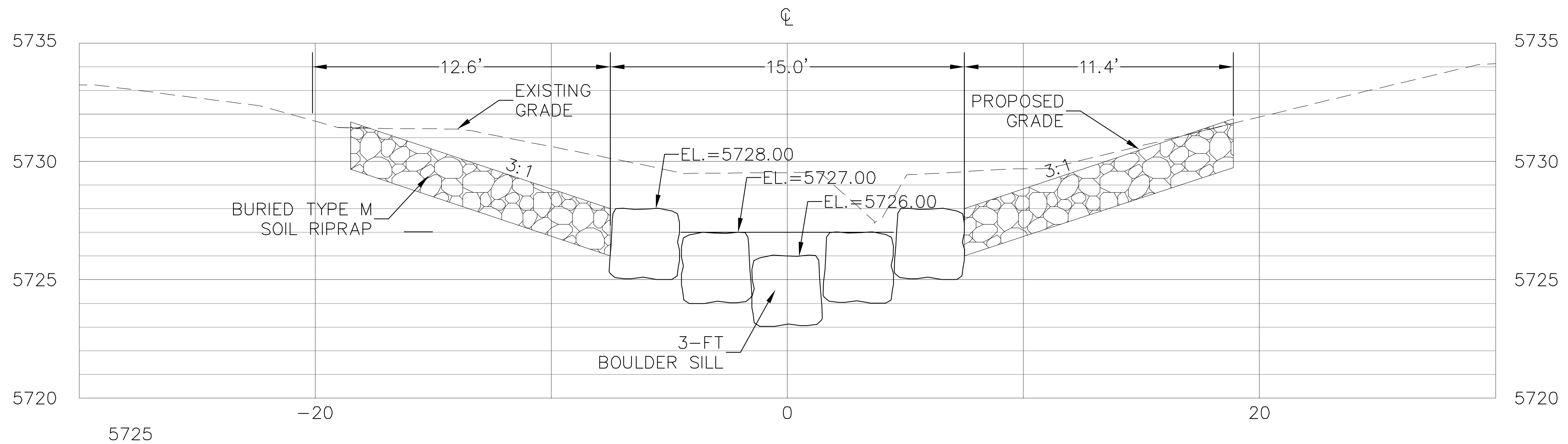
℄
12.6'
15.0'
11.4'
EXISTING GRADE
PROPOSED GRADE
EL.=5728.00
EL.=5727.00
EL.=5726.00
3:1
3:1
BURIED TYPE M SOIL RIPRAP
3-FT BOULDER SILL
5735
5730
5725
5720
-20
0
20

SECTION B
SCALE 1"=10'

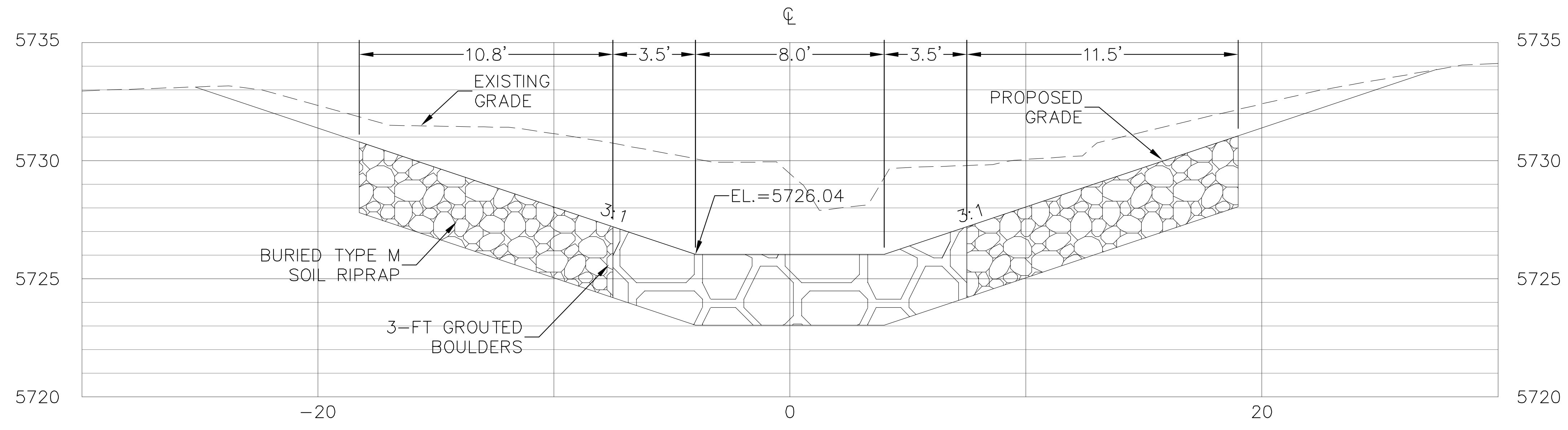
℄
10.8'
3.5'
8.0'
3.5'
11.5'
EXISTING GRADE
PROPOSED GRADE
EL.=5726.04
3:1
3:1
BURIED TYPE M SOIL RIPRAP
3-FT GROUTED BOULDERS
5735
5730
5725
5720
-20
0
20

SECTION C
SCALE 1"=10'

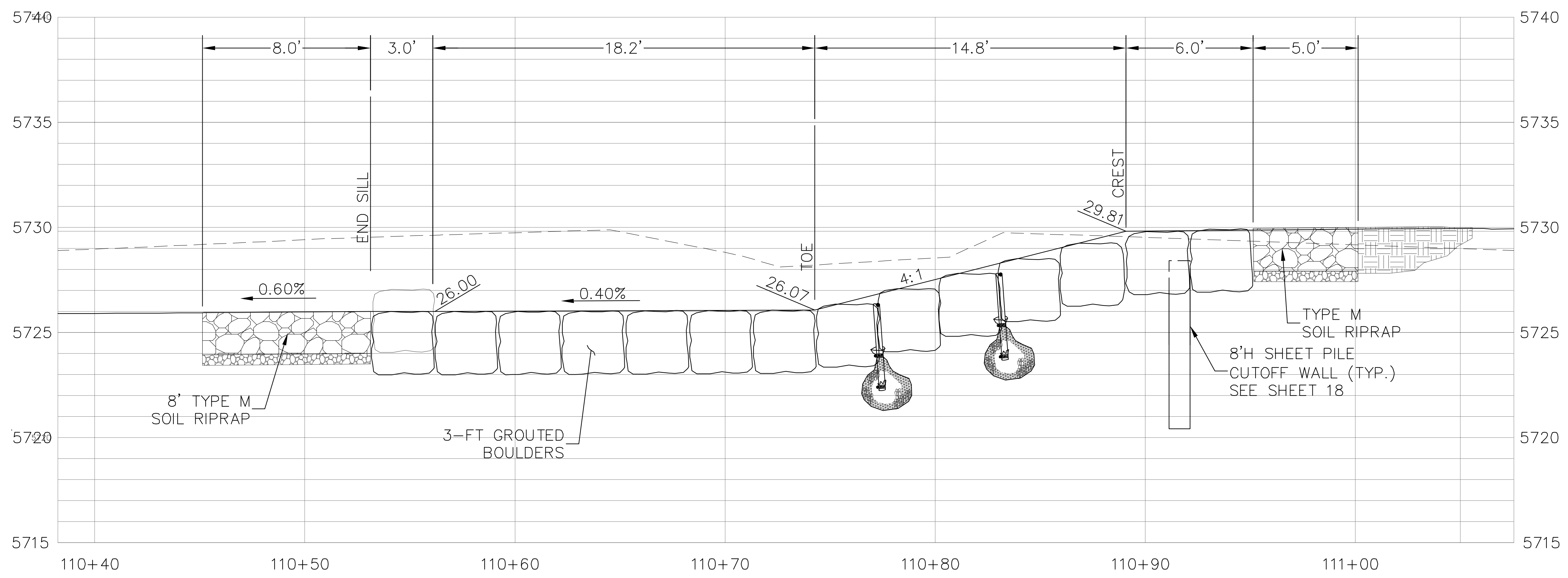
8.0'
3.0'
18.2'
14.8'
6.0'
5.0'
END SILL
TOE
CREST
0.60%
26.00
0.40%
26.07
4:1
29.81
8' TYPE M SOIL RIPRAP
3-FT GROUTED BOULDERS
TYPE M SOIL RIPRAP
8'H SHEET PILE CUTOFF WALL (TYP.) SEE SHEET 18
5740
5735
5730
5725
5720
5715
110+40
110+50
110+60
110+70
110+80
110+90
111+00

SECTION A
SCALE 1"=5'

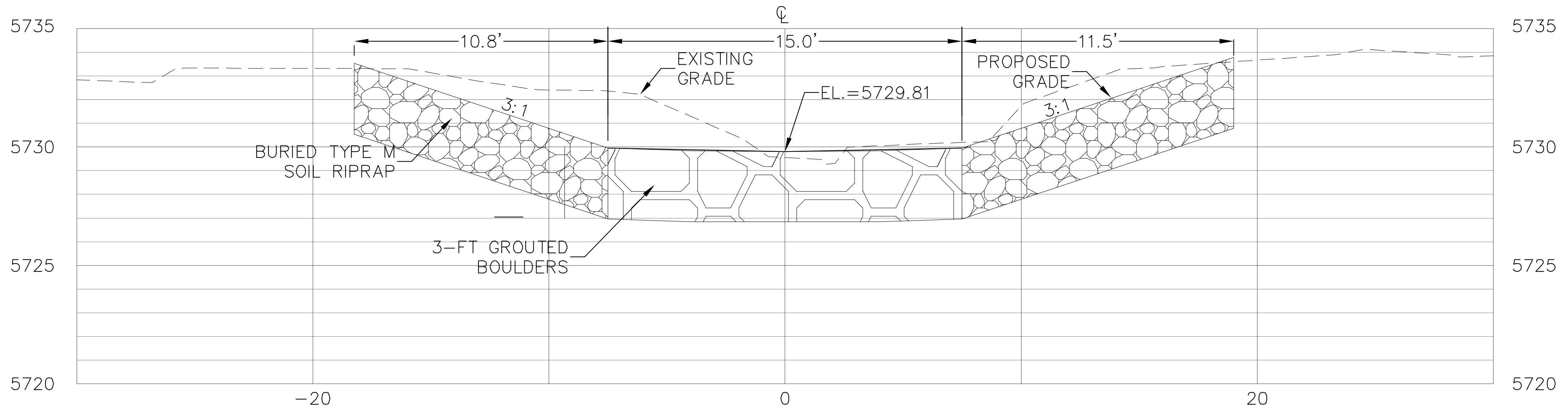
℄
10.8'
15.0'
11.5'
EXISTING GRADE
PROPOSED GRADE
EL.=5729.81
3:1
3:1
BURIED TYPE M SOIL RIPRAP
3-FT GROUTED BOULDERS
5735
5730
5725
5720
-20
0
20

SECTION D
SCALE 1"=10'

No.	DATE	REVISIONS	APPR.

11-033-GSU-352

PLAN
DRAWN SV
DESIGNED CR
CHECKED MJU

UTILITIES
RESEARCHED DDB
DRAWN DDB
CHECKED DDB

Southeast Metro Stormwater Authority

ICON
ENGINEERING, INC.
8100 South Akron Street, Suite 300, Centennial, CO 80112
Phone (303) 221-0802 / Fax (303) 221-4019
WWW.ICONENG.COM

GOLDSMITH GULCH CHANNEL IMPROVEMENTS

GROUTED SLOPING BOULDER DROP NO. 2
CROSS-SECTIONS

DATE
AUG 2012

SHEET
14

CHERRY CREEK FARM FILING NO. TWO
OUTLOT A
ASPHALT
PEAKVIEW PLACE APARTMENTS
PROPOSED 77.84 LF OF SANITARY PIPE @ 5.24%
INSTALL 4' MH
RIM 5725.5
INV IN 5712.62
INV OUT 5712.42
0+77.84
15.5'
0+60
0+40
0+20
0+00
SS
106+00
107+00
108+00
EX 45.97 LF OF SAN TO BE ABANDONED
INSTALL 4' MH
RIM 5718.3
INV IN (SE) 5708.34
EX INV IN (S) 5708.14
EX INV OUT 5708.14
EX 62.25 LF OF SAN TO REMAIN
ASPHALT PATH
EXISTING 12" PVC TO PASS THROUGH EXISTING MANHOLE. MANHOLE TO BE LOWERED AND ABANDONED
5717
5720
5721
5722
5723
5724
5725
5726
5727
30
NORTH
0
10'
20'
SCALE: 1" = 10' HOR

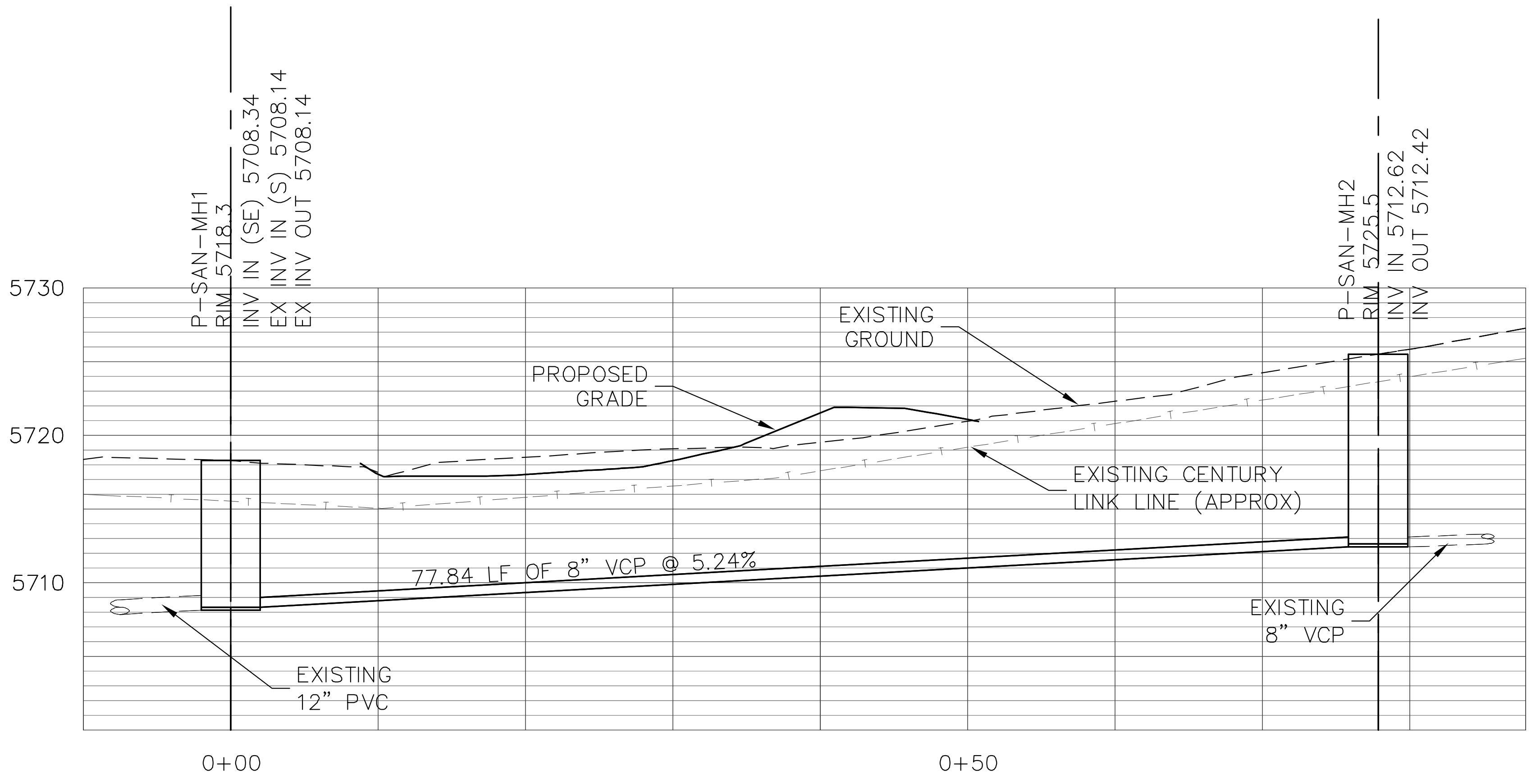
P-SAN-MH1
RIM 5718.3
INV IN (SE) 5708.34
EX INV IN (S) 5708.14
EX INV OUT 5708.14
P-SAN-MH2
RIM 5725.5
INV IN 5712.62
INV OUT 5712.42
5730
5720
5710
EXISTING GROUND
PROPOSED GRADE
EXISTING CENTURY LINK LINE (APPROX)
77.84 LF OF 8" VCP @ 5.24%
EXISTING 8" VCP
EXISTING 12" PVC
0+00
0+50

No.	DATE	REVISIONS	APPR.

PROJECT NO. 11-033-GSU-352

PLAN
DRAWN
CR
DESIGNED
CR
CHECKED
MJU

UTILITIES
RESEARCHED
DDB
DRAWN
DDB
CHECKED
DDB

Southeast Metro Stormwater Authority

URBAN DRAINAGE AND FLOOD CONTROL DISTRICT

ICON
ENGINEERING, INC.
8100 South Akron Street, Suite 300, Centennial, CO 80112
Phone (303) 221-0802 / Fax (303) 221-4019
WWW.ICONENG.COM

GOLDSMITH GULCH CHANNEL IMPROVEMENTS

SANITARY SEWER REROUTE PLAN AND PROFILE

DATE
AUG 2012

SHEET
16

P:\P\11033GSU\Dwg\FINAL SHEET SET\SHEET-16 SANITARY SEWER REROUTE PLAN & PROFILE.dwg, 10/17/2012 10:31:38 AM, dbernier, AcroPlot.pc3, 1:1

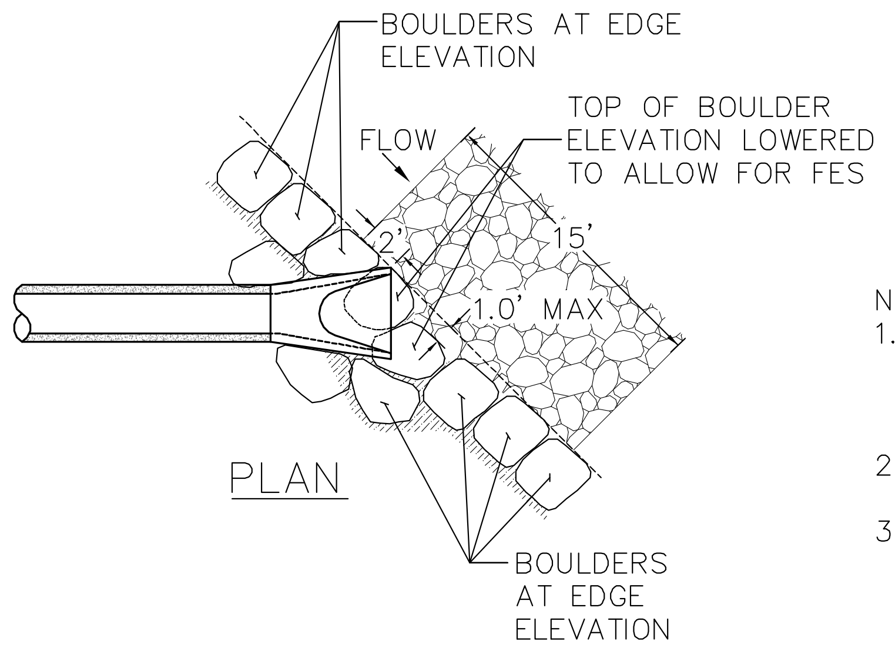
BOULDERS AT EDGE ELEVATION
FLOW
TOP OF BOULDER ELEVATION LOWERED TO ALLOW FOR FES
2'
15'
1.0' MAX
BOULDERS AT EDGE ELEVATION

PLAN

NOTES:
1. FES SHALL NOT PROTRUDE INTO TYPICAL CHANNEL WIDTH NOR SHALL THE FES EXTEND BEYOND SUPPORTING BOULDERS.
2. FES SHALL BE ANCHORED TO RCP BY CONCRETE JOINT FASTENERS.
3. FES SHALL BE EMBEDED IN GROUT

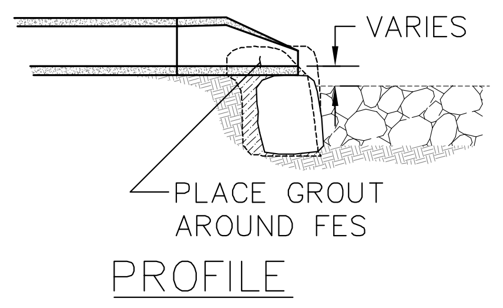
VARIES
PLACE GROUT AROUND FES

PROFILE

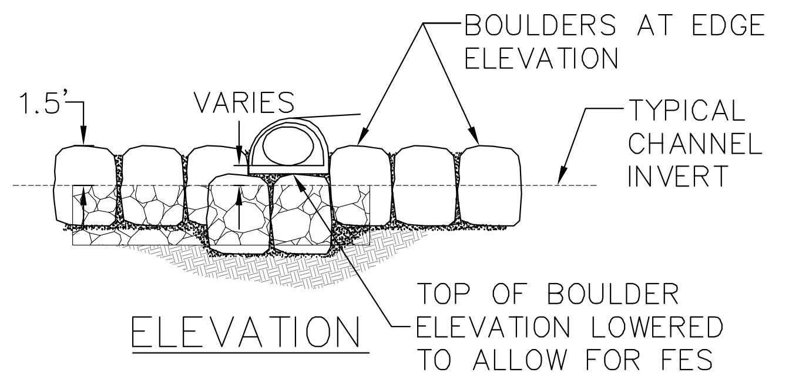
BOULDERS AT EDGE ELEVATION
1.5'
VARIES
TYPICAL CHANNEL INVERT
TOP OF BOULDER ELEVATION LOWERED TO ALLOW FOR FES

ELEVATION

PIPE OUTFALL DETAIL

SCALE: N.T.S.

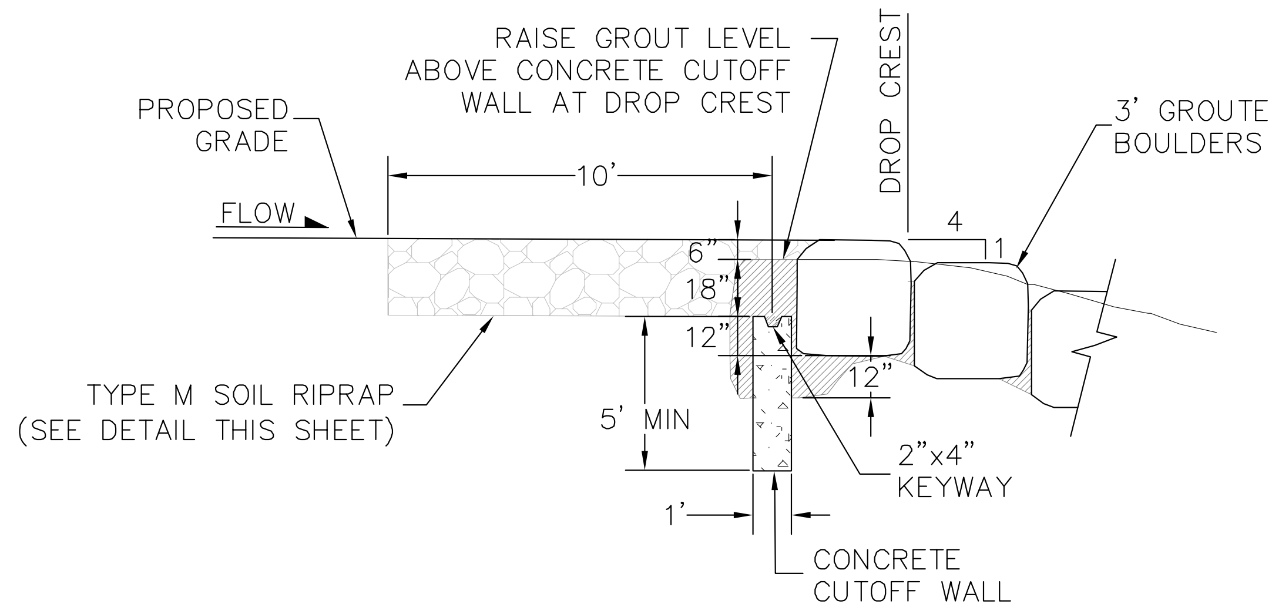
RAISE GROUT LEVEL ABOVE CONCRETE CUTOFF WALL AT DROP CREST
DROP CREST
PROPOSED GRADE
3' GROUTED BOULDERS
10'
FLOW
4
1
6"
18"
12"
12"
TYPE M SOIL RIPRAP (SEE DETAIL THIS SHEET)
5' MIN
2"x4" KEYWAY
1'
CONCRETE CUTOFF WALL

TYPICAL SEEPAGE CUTOFF WALL DETAIL

SCALE: N.T.S.

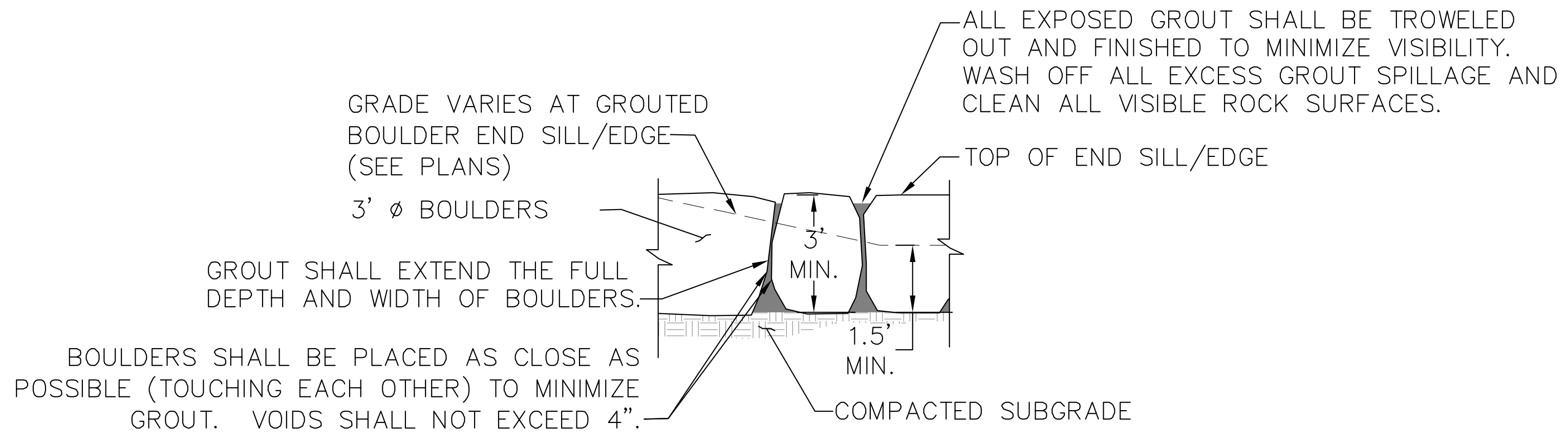
ALL EXPOSED GROUT SHALL BE TROWELED OUT AND FINISHED TO MINIMIZE VISIBILITY. WASH OFF ALL EXCESS GROUT SPILLAGE AND CLEAN ALL VISIBLE ROCK SURFACES.
GRADE VARIES AT GROUTED BOULDER END SILL/EDGE (SEE PLANS)
TOP OF END SILL/EDGE
3' ø BOULDERS
3' MIN.
GROUT SHALL EXTEND THE FULL DEPTH AND WIDTH OF BOULDERS.
1.5' MIN.
BOULDERS SHALL BE PLACED AS CLOSE AS POSSIBLE (TOUCHING EACH OTHER) TO MINIMIZE GROUT. VOIDS SHALL NOT EXCEED 4".
COMPACTED SUBGRADE

TYPICAL GROUTED BOULDER END SILL/EDGE

SCALE: N.T.S.

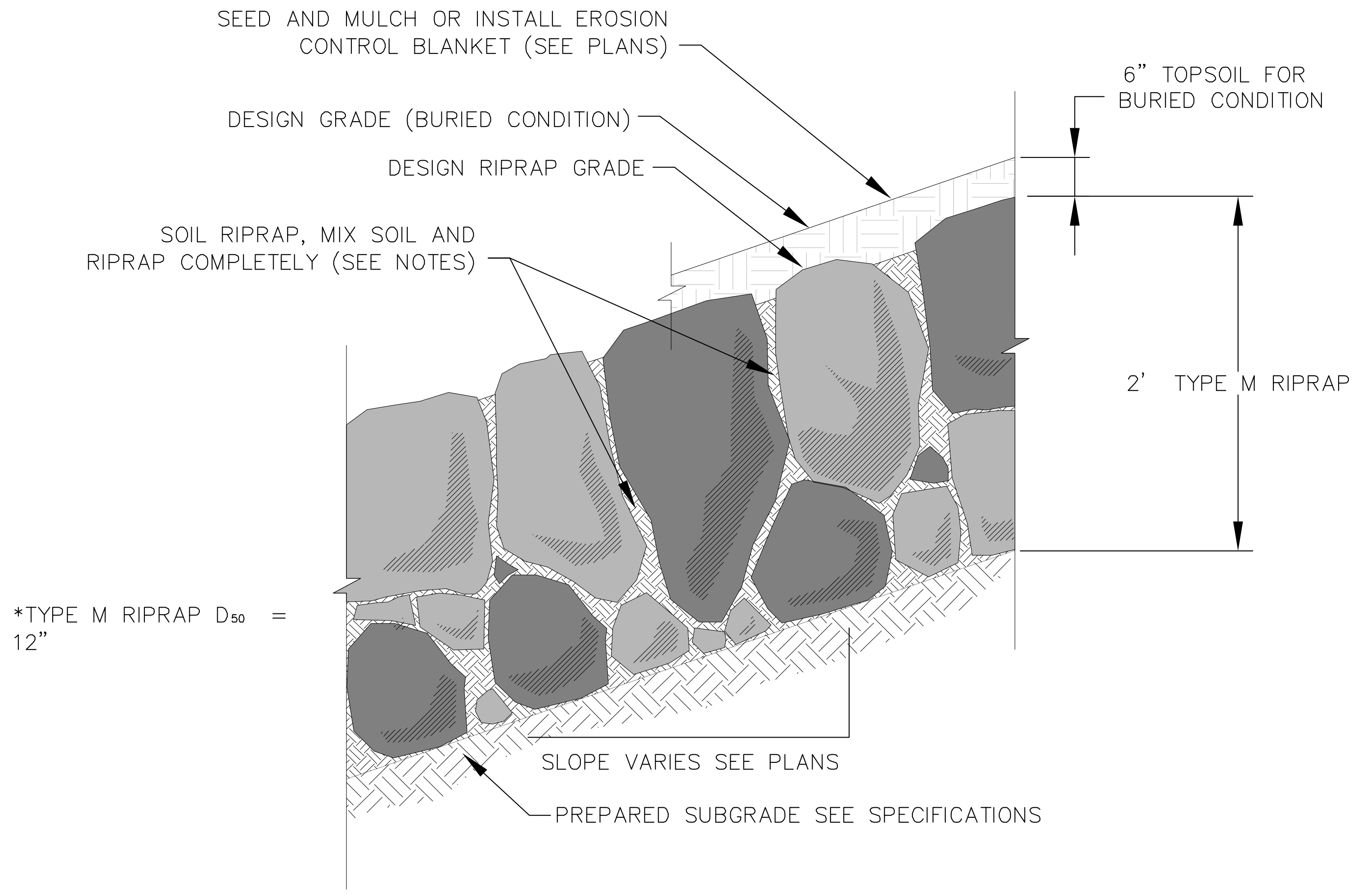
SEED AND MULCH OR INSTALL EROSION CONTROL BLANKET (SEE PLANS)
6" TOPSOIL FOR BURIED CONDITION
DESIGN GRADE (BURIED CONDITION)
DESIGN RIPRAP GRADE
SOIL RIPRAP, MIX SOIL AND RIPRAP COMPLETELY (SEE NOTES)
2' TYPE M RIPRAP
*TYPE M RIPRAP D50 = 12"
SLOPE VARIES SEE PLANS
PREPARED SUBGRADE SEE SPECIFICATIONS

NOTES:

1. SOIL RIPRAP DETAILS ARE APPLICABLE TO SLOPED AREAS. REFER TO THE SITE PLAN FOR ACTUAL LOCATION AND LIMITS.

2. MIX UNIFORMALLY 65% RIPRAP BY VOLUME WITH 35% OF APPROVED SOIL BY VOLUME PRIOR TO PLACEMENT.

3. PLACE STONE-SOIL MIX TO RESULT IN SECURELY INTERLOCKED ROCK AT THE DESIGN THICKNESS AND GRADE. COMPACT AND LEVEL TO ELIMINATE ALL VOIDS AND ROCKS PROJECTING ABOVE DESIGN RIPRAP TOP GRADE.

4. CRIMP OR TACKIFY MULCH OR USE APPROVED HYDROMULCH AS CALLED FOR IN THE PLANS AND SPECIFICATIONS.

SOIL RIPRAP DETAIL AND NOTES

SCALE: N.T.S.

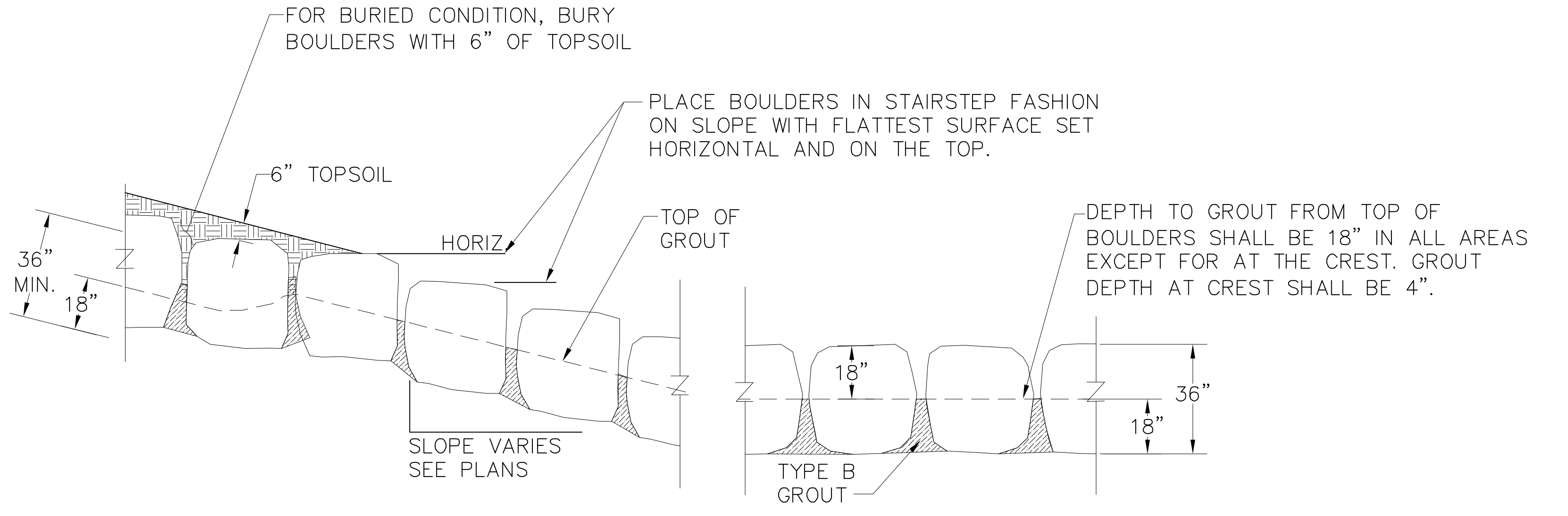
FOR BURIED CONDITION, BURY BOULDERS WITH 6" OF TOPSOIL
PLACE BOULDERS IN STAIRSTEP FASHION ON SLOPE WITH FLATTEST SURFACE SET HORIZONTAL AND ON THE TOP.
6" TOPSOIL
HORIZ
TOP OF GROUT
DEPTH TO GROUT FROM TOP OF BOULDERS SHALL BE 18" IN ALL AREAS EXCEPT FOR AT THE CREST. GROUT DEPTH AT CREST SHALL BE 4".
36" MIN.
18"
18"
36"
18"
SLOPE VARIES SEE PLANS
TYPE B GROUT

GROUT NOTES:

MATERIAL SPECIFICATIONS

1. ALL GROUT SHALL HAVE A MINIMUM 28-DAY COMPRESSIVE STRENGTH EQUAL TO 3200 PSI.
2. ONE CUBIC YARD OF GROUT SHALL HAVE A MINIMUM OF SIX (6) SACKS OF TYPE II PORTLAND CEMENT.
3. A MAXIMUM OF 25% TYPE F FLY ASH MAY BE SUBSTITUTED FOR THE PORTLAND CEMENT.
4. THE AGGREGATE SHALL BE COMPRISED OF 70% NATURAL SAND (FINES) AND 30% ⅜-INCH ROCK (COARSE).
5. FULL DEPTH PENETRATION OF THE GROUT INTO THE BOULDER VOIDS SHALL BE ACHIEVED BY INJECTING GROUT STARTING WITH THE NOZZLE NEAR THE BOTTOM AND RAISING IT AS GROUT FILLS, WHILE VIBRATING GROUT INTO PLACE USING A PENCIL VIBRATOR.
6. THE GROUT SLUMP SHALL BE 4-INCHES TO 6-INCHES.
7. AIR ENTRAINMENT SHALL BE BETWEEN 5.5% AND 7.5%.
8. TO CONTROL SHRINKAGE AND CRACKING, 1.5 POUNDS OF FIBERMESH, OR EQUIVALENT, SHALL BE USED PER CUBIC YARD OF GROUT.
9. COLOR ADDITIVE IN REQUIRED AMOUNTS SHALL BE USED WHEN SO SPECIFIED BY CONTRACT.

PLACEMENT SPECIFICATIONS

1. SPECIAL PROCEDURES SHALL BE REQUIRED FOR GROUT PLACEMENT WHEN THE AIR TEMPERATURES ARE LESS THAN 40°F OR GREATER THAN 90°F. CONTRACTOR SHALL OBTAIN PRIOR APPROVAL FROM THE DESIGN ENGINEER OF THE PROCEDURES TO BE USED FOR PROTECTING THE GROUT.
2. CLEAN BOULDERS BY BRUSHING AND WASHING BEFORE GROUTING.
3. GROUT SHALL BE DELIVERED BY MEANS OF A LOW PRESSURE (LESS THAN 10 PSI) GROUT PUMP USING A 2-INCH DIAMETER NOZZLE.
4. AFTER GROUT PLACEMENT, EXPOSED BOULDER FACES SHALL BE CLEANED WITH A WET BROOM.
5. FULL DEPTH PENETRATION OF THE GROUT INTO THE BOULDER VOIDS SHALL BE ACHIEVED BY INJECTING GROUT STARTING WITH THE NOZZLE NEAR THE BOTTOM AND RAISING IT AS GROUT FILLS, WHILE VIBRATING GROUT INTO PLACE USING A PENCIL VIBRATOR.
6. ALL GROUT BETWEEN BOULDERS SHALL BE TREATED WITH A BROOM FINISH.
7. ALL FINISHED GROUT SURFACES SHALL BE SPRAYED WITH A CLEAR LIQUID MEMBRANE CURING COMPOUND AS SPECIFIED IN ASTM C-309.

GROUTED BOULDER DETAILS AND NOTES

SCALE: N.T.S.

No.	DATE	REVISIONS	APPR.

PROJECT NO. 11-033-GSU-352

PLAN	UTILITIES
DRAWN SV	RESEARCHED DDB
DESIGNED CR	DRAWN DDB
CHECKED CR	CHECKED DDB

Southeast Metro Stormwater Authority

URBAN DRAINAGE AND FLOOD CONTROL DISTRICT

ICON
ENGINEERING, INC.
8100 South Akron Street, Suite 300, Centennial, CO 80112
Phone (303) 221-0802 / Fax (303) 221-4019
WWW.ICONENG.COM

GOLDSMITH GULCH CHANNEL IMPROVEMENTS

DETAILS

DATE
OCT 2012

SHEET
17

P:\P\11033GSU\Dwg\FINAL SHEET SET\SHEET-17-18-DETAILS.dwg, 10/17/2012 10:36:41 AM, dbernier, AcroPlot.pc3, 1:1

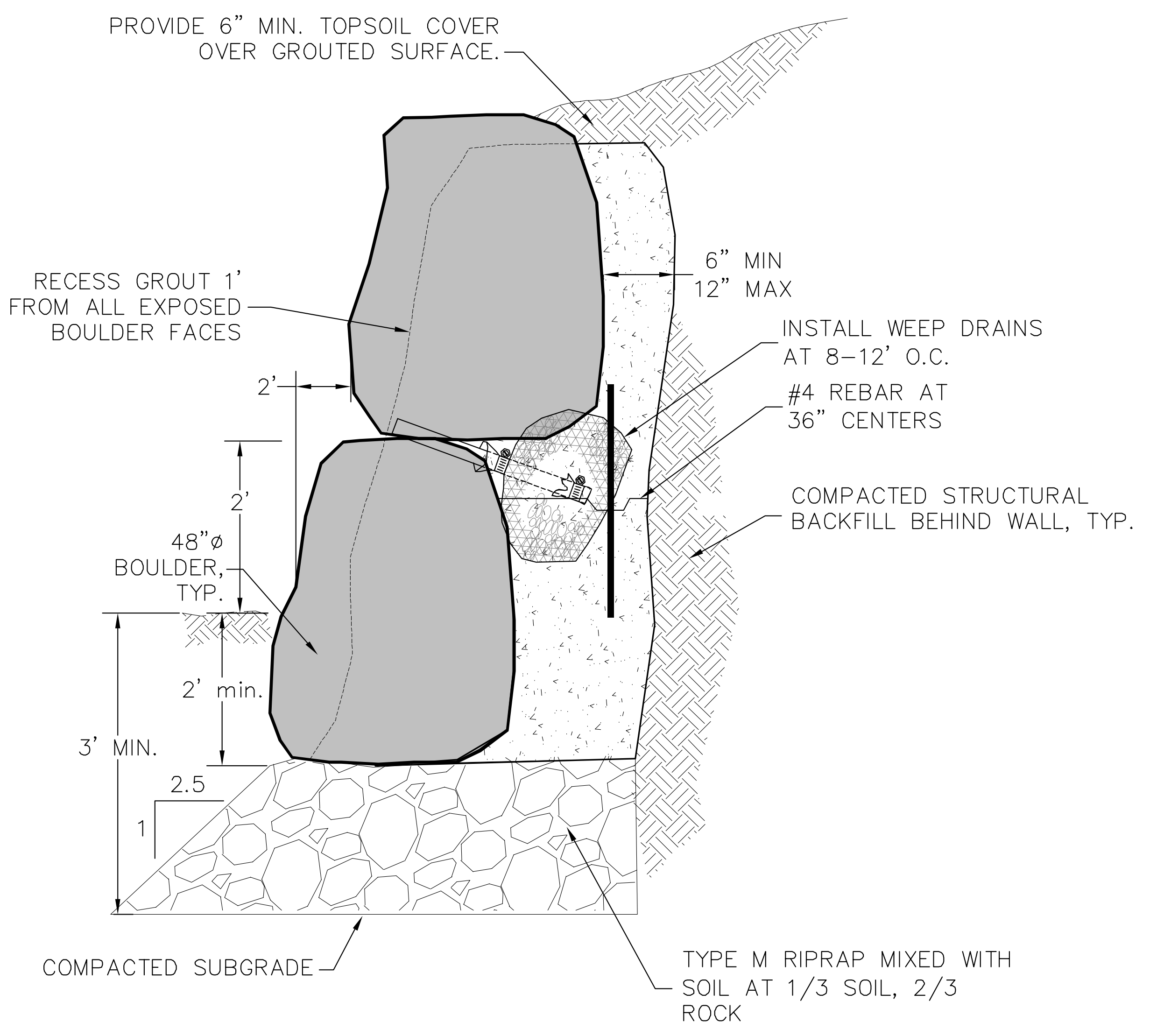
PROVIDE 6" MIN. TOPSOIL COVER OVER GROUTED SURFACE.
RECESS GROUT 1' FROM ALL EXPOSED BOULDER FACES
6" MIN 12" MAX
INSTALL WEEP DRAINS AT 8-12' O.C.
#4 REBAR AT 36" CENTERS
COMPACTED STRUCTURAL BACKFILL BEHIND WALL, TYP.
2'
2'
48"⌀ BOULDER, TYP.
2' min.
3' MIN.
2.5
1
COMPACTED SUBGRADE
TYPE M RIPRAP MIXED WITH SOIL AT 1/3 SOIL, 2/3 ROCK

STACKED GROUTED BOULDER WALL

SCALE: N.T.S.

NOTES:

1. SUBGRADE TO RECEIVE BOULDERS SHALL BE PREPARED BY SCARIFYING TO A DEPTH OF 6 INCHES, REMOVING ANY UNSUITABLE MATERIAL, REPLACING WITH SUITABLE MATERIAL IF REQUIRED, AND COMPACTING TO 95% DENSITY (ASTM D698).

2. ALL GROUTED BOULDERS SHALL CONFORM TO THE SIZE SPECIFIED (48"). THE RANGE OF THE SMALLEST DIMENSION OF INDIVIDUAL ROCK BOULDERS SHALL BE 40 INCHES. THE MAXIMUM RATIO OF LARGEST TO SMALLEST ROCK DIMENSION SHALL BE 1.50. BOULDERS THAT DO NOT MEET THESE SIZE AND SHAPE REQUIREMENTS SHALL BE SORTED OUT AND DISPOSED OF AT THE CONTRACTOR'S EXPENSE.

3. THE BOULDERS SHALL BE CAREFULLY PICKED AND ARRANGED SO THAT ADJACENT ROCK SURFACES MATCH WITHIN 2 INCHES IN TOP ELEVATION AND 2 INCHES ALONG THE VERTICAL EXPOSED FACE OR CHANNEL SIDE OF ROCK. BOULDERS SHALL BE PLACED WITH THE FLATTEST SURFACE HORIZONTAL AND ON TOP AND SUCH THAT ADJACENT BOULDERS "TOUCH" EACH OTHER AND VOIDS DO NOT EXCEED 4 INCHES. IT IS THE INTENT OF CONSTRUCTION TO MINIMIZE VOIDS AND GROUT PLACED BETWEEN BOULDERS.

4. FINAL PLACEMENT OF BOULDERS SHALL BE APPROVED BY THE OWNER OR OWNER'S REPRESENTATIVE PRIOR TO GROUTING.

5. BEFORE GROUTING, CLEAN ALL DIRT AND MATERIALS FROM ROCK THAT COULD PREVENT THE GROUT FROM BONDING TO ROCK. THIS MAY REQUIRE DIGGING BY HAND. ALL BOULDER SURFACES TO BE GROUTED SHALL BE WETTED JUST PRIOR TO GROUTING.

6. PLACE GROUT WITH A GROUT PUMP AND INJECT WITH A NOZZLE TO REACH INTO VOIDS. USE VIBRATOR TO ENSURE ALL VOIDS BEHIND AND BETWEEN ROCK ARE COMPLETELY FILLED WITH GROUT. GROUT TO BE TROWELED OUT AND FINISHED AS SPECIFIED FROM SURFACE TO MINIMIZE VISIBILITY. WASH OFF ALL EXCESSIVE GROUT AND SPILLAGE AND CLEAN ALL VISIBLE ROCK SURFACES.

7. THE CONTRACTOR SHALL CONTROL GROUT MIX AND PLACEMENT PROCEDURES TO ACHIEVE THE SPECIFIED THICKNESS AND GRADE OF THE GROUT LAYER.

8. GROUT SHALL BE UDFCD "TYPE B".

9. DEPTH OF GROUT FROM TOP OF BOULDERS SHALL BE 24" IN ALL AREAS EXCEPT FOR OVER THE SHEET PILE CUTOFF WALL. GROUT DEPTH FROM THE TOP OF BOULDERS OVER THE SHEET PILE WALL SHALL BE 6".

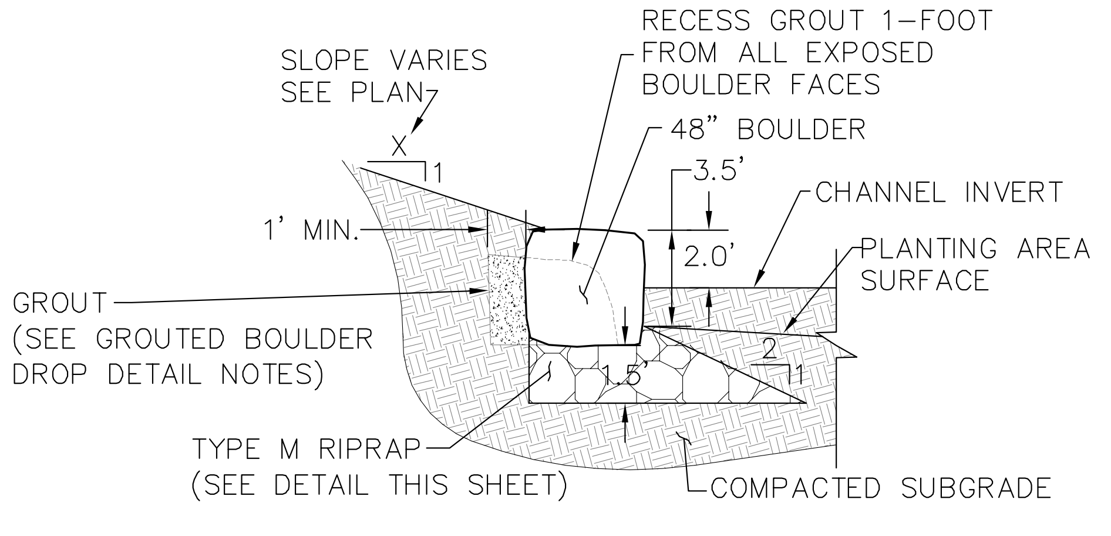
SLOPE VARIES SEE PLAN
X
1
RECESS GROUT 1-FOOT FROM ALL EXPOSED BOULDER FACES
48" BOULDER
3.5'
CHANNEL INVERT
2.0'
PLANTING AREA SURFACE
1' MIN.
GROUT (SEE GROUTED BOULDER DROP DETAIL NOTES)
1.5'
2
1
TYPE M RIPRAP (SEE DETAIL THIS SHEET)
COMPACTED SUBGRADE

SCALE: N.T.S.

GROUTED SINGLE BOULDER WALL

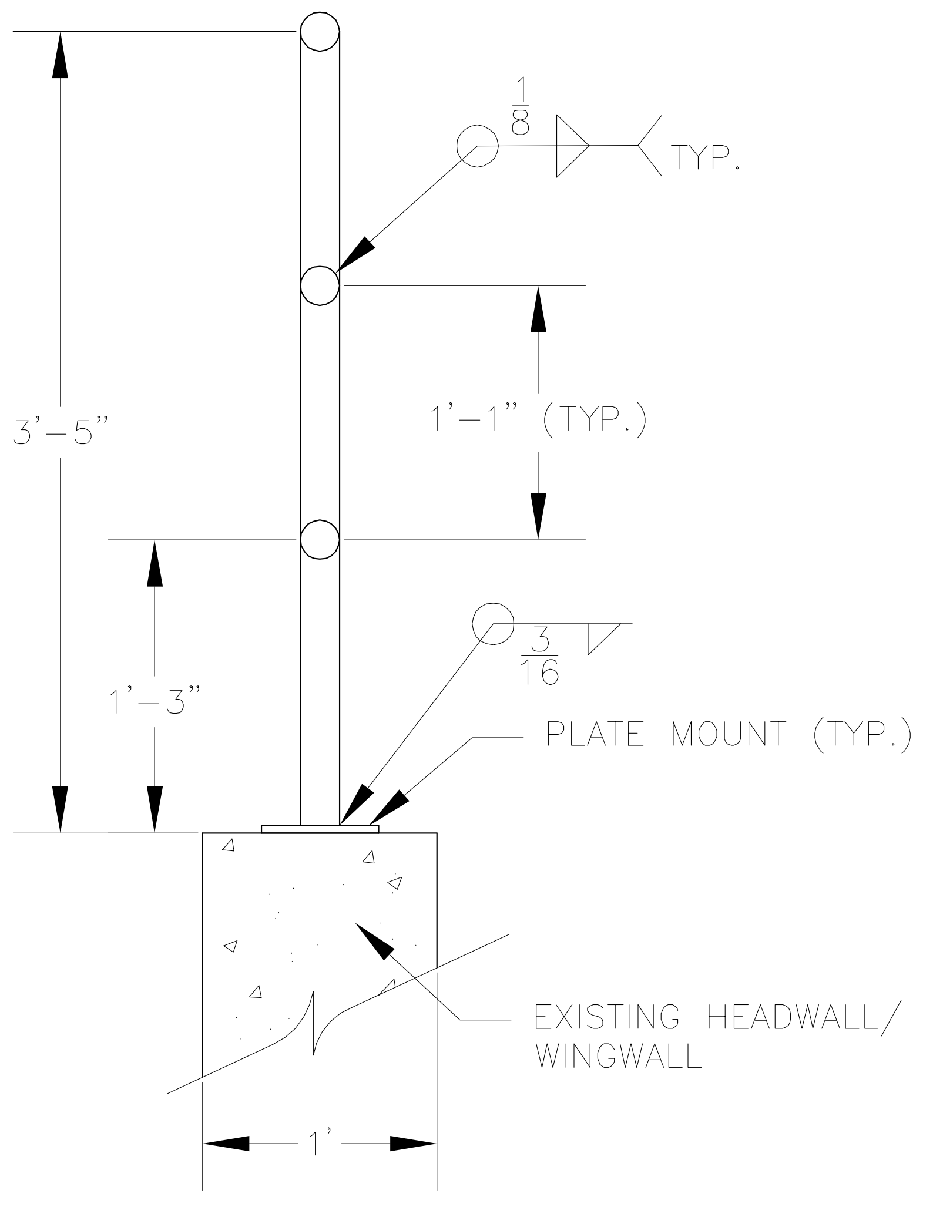
1/8
TYP.
3'-5"
1'-1" (TYP.)
1'-3"
3/16
PLATE MOUNT (TYP.)
EXISTING HEADWALL/ WINGWALL
1'

TYPICAL SECTION

RAILING NOTES

1. CONTRACTOR SHALL PROVIDE SHOP DRAWINGS PRIOR TO FABRICATION.
2. ALL STEEL SHALL BE POWDER COATED AFTER FABRICATION; COLOR TO BE DETERMINED BY OWNER.
3. ALL HANDRAIL SHALL BE FABRICATED BASED ON ACTUAL FIELD DIMENSIONS OF THE HEADWALL AND WINGWALLS. POSTS TO BE PLUMB. RAILS TO SLOPE AND CURVE WITH WALL.
4. PROVIDE BREAK IN RAILS BETWEEN HEADWALLS AND WINGWALLS FOR DIFFERENTIAL SETTLEMENT.
5. ALL ANCHOR BOLTS & NUTS SHALL BE GALVANIZED.
6. ALL STRUCTURAL STEEL PLATES SHALL CONFORM TO ASTM SERIAL DESIGNATION A36 AND ALL PIPE SHALL CONFORM ASTM A53 WITH A THICKNESS OF 0.154".
7. ALL WELDING OR GAS CUTTING SHALL BE IN ACCORDANCE WITH THE CURRENT STANDARDS OF THE AMERICAN WELDING SOCIETY INCLUDING AWS 1.5 (SECTION 509). ALL WELDING SHALL BE PERFORMED BY CERTIFIED WELDERS QUALIFIED BY THE AMERICAN WELDING SOCIETY STANDARD QUALIFICATION PROCEDURE.

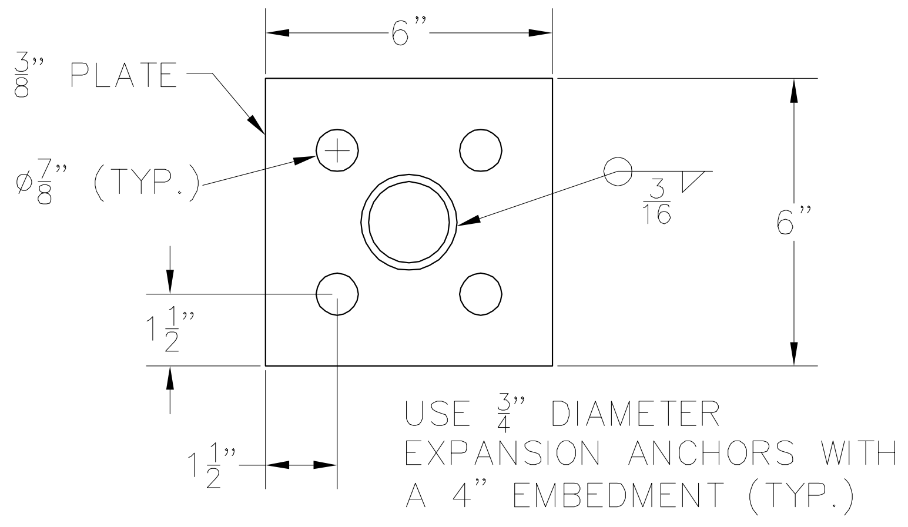
6"
3/8" PLATE
⌀7/8" (TYP.)
3/16
6"
1 1/2"
1 1/2"
USE 3/4" DIAMETER EXPANSION ANCHORS WITH A 4" EMBEDMENT (TYP.)

MOUNTING PLATE

HANDRAIL DETAILS

No.	DATE	REVISIONS	APPR.

PROJECT NO. 11-033-GSU-352

PLAN
DRAWN SV
DESIGNED CR
CHECKED CR

UTILITIES
RESEARCHED DDB
DRAWN DDB
CHECKED DDB

ICON
ENGINEERING, INC.
8100 South Akron Street, Suite 300, Centennial, CO 80112
Phone (303) 221-0802 / Fax (303) 221-4019
WWW.ICONENG.COM

GOLDSMITH GULCH CHANNEL IMPROVEMENTS

DETAILS

DATE
OCT 2012

SHEET
18

SOUTHEAST METRO STORMWATER AUTHORITY
GOLDSMITH GULCH
CHANNEL IMPROVEMENTS
GRADING, EROSION, AND SEDIMENT CONTROL PLAN

SEMSWA PROJECT NO. C09-3004-2
OCTOBER 2012

THE GRADING, EROSION AND SEDIMENT CONTROL PLAN INCLUDED HEREIN HAS BEEN PLACED IN THE ARAPAHOE COUNTY FILE FOR THIS PROJECT AND APPEARS TO FULFILL APPLICABLE ARAPAHOE COUNTY GRADING, EROSION AND SEDIMENT CONTROL CRITERIA, AS AMENDED. ADDITIONAL GRADING, EROSION AND SEDIMENT CONTROL MEASURES MAY BE REQUIRED OF THE PERMITTEE(S) DUE TO UNFORESEEN EROSION PROBLEMS OR IF THE SUBMITTED GESC PLAN DOES NOT FUNCTION AS INTENDED. THE REQUIREMENTS OF THIS GESC PLAN SHALL RUN WITH THE LAND AND BE THE OBLIGATION OF THE PERMITTEE(S) UNTIL SUCH TIME AS THE GESC PLAN IS PROPERLY COMPLETED, MODIFIED OR VOIDED.

I HEREBY ATTEST THAT THE ATTACHED GRADING, EROSION, AND SEDIMENT CONTROL (GESC) PLAN FOR GOLDSMITH GULCH CHANNEL IMPROVEMENTS HAS BEEN PREPARED BY ME OR UNDER MY DIRECT SUPERVISION, AND TO THE BEST OF MY KNOWLEDGE AND ABILITY HAS BEEN PREPARED IN ACCORDANCE WITH LATEST VERSION OF THE ARAPAHOE COUNTY GESC MANUAL. THE SIGNATURE AND STAMP AFFIXED HERON CERTIFIES THAT THE GESC PLAN WAS PREPARED IN ACCORDANCE WITH THE REQUIRED REGULATIONS AND CRITERIA; HOWEVER, THE STAMP AND SIGNATURE DOES NOT CERTIFY OR GUARANTEE FUTURE PERFORMANCE OF THE EXECUTION OF THE PLAN BY THE CONTRACTOR. THE CONTRACTOR IS RESPONSIBLE FOR EXECUTING THE CONSTRUCTION WORK ACCORDING TO THE INFORMATION SET FORTH IN THE PLAN AND IN ACCORDANCE WITH ALL APPLICABLE REQUIREMENTS.

THE GRADING, EROSION AND SEDIMENT CONTROL PLAN INCLUDED HEREIN HAS BEEN PREPARED UNDER MY DIRECT SUPERVISION IN ACCORDANCE WITH THE REQUIREMENTS OF THE GRADING, EROSION, AND SEDIMENT CONTROL (GESC) CRITERIA MANUAL OF ARAPAHOE COUNTY, AS AMENDED.

GESC PLANS PREPARED BY:

FOR AND ON BEHALF OF ICON ENGINEERING, INC.   DATE   PE NUMBER

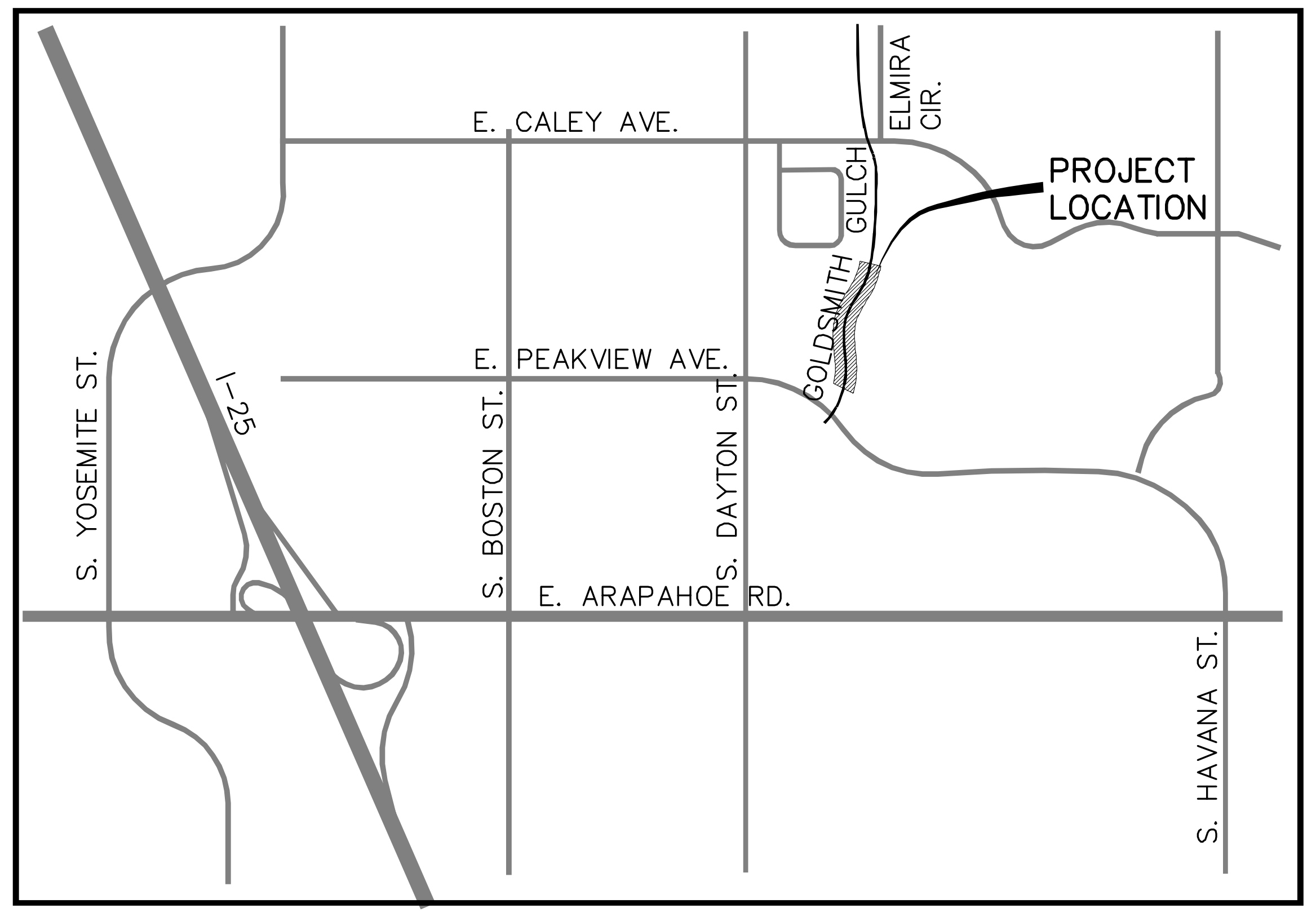

LOCATION MAP
1" = 1000'
N

INDEX OF SHEETS

SHEET	DESCRIPTION
GESC1	GESC COVER SHEET
GESC2	GESC INDEX
GESC3-4	GESC PLAN (INITIAL/INTERIM)
GESC5-6	GESC PLAN (FINAL)
GESC7-8	WATER CONTROL PLAN
1-4	SEMSWA STANDARD GESC NOTES AND DETAILS

811
Know what's below.
Call before you dig.

Southeast Metro Stormwater Authority
76 Inverness Drive East, Suite A,
Englewood, CO 80112
P: 303-858-8844; F: 303-267-9550

ICON
ENGINEERING, INC.
8100 South Akron Street, Suite 300, Englewood, CO 80112
Phone (303) 221-0802 / Fax (303) 221-4019

DATUM & BENCHMARK

COAST AND GEODETIC SURVEY MONUMENT. NGS DESIGNATION K 54. NAVD 88 ELEVATION 5635.17

ARAPAHOE COUNTY CASE NUMBER XXX-XXX

THESE GESC PLANS HAVE BEEN REVIEWED BY ARAPAHOE COUNTY FOR GRADING, EROSION, AND SEDIMENT CONTROL IMPROVEMENTS ONLY

DEPARTMENT OF PUBLIC WORKS AND DEVELOPMENT
APPROVAL BLOCK

ICON Job No. 11-033-GSU-352 GESC1

FLORENCE WY
CHERRY CREEK FARM FILING NO. TWO
GESC3 (INITIAL)/ GESC5 (FINAL)
PEAKVIEW PLACE APARTMENTS
PEAKVIEW PLACE APARTMENTS
D.I.
D.I.
D.I.
D.I.
D.I.
D.I.
CHERRY CREEK FARM FILING NO. ONE
UNINCORPORATED ARAPAHOE COUNTY
CITY OF CENTENNIAL
GESC4 (INITIAL)/ GESC6 (FINAL)
EMPORIA CIR
E. PEAKVIEW AVE.
APPLETREE CONDOMINIUMS
NORTH
0
50'
100'
1 INCH = 50 FEET

ARAPAHOE COUNTY CASE NUMBER XXX-XXX

No.	DATE	REVISIONS	APPR.

ICON PROJECT NO. 11-033-GSU

PLAN	UTILITIES
DRAWN CR	RESEARCHED DDB
DESIGNED CR	DRAWN DDB
CHECKED MJU	CHECKED DDB

Southeast Metro Stormwater Authority

URBAN DRAINAGE AND FLOOD CONTROL DISTRICT

ICON
ENGINEERING, INC.
8100 South Akron Street, Suite 300, Englewood, CO 8012
Phone (303) 221-0802 / Fax (303) 221-4019
WWW.ICONENG.COM

GOLDSMITH GULCH CHANNEL IMPROVEMENTS

GESC INDEX

DATE
OCT 2012

SHEET
GESC2

CHERRY CREEK FARM FILING NO. TWO
OUTLOT A
CHERRY CREEK FARM FILING NO. ONE
BLOCK 1
LOC
CF
SF
CD
L=40'
CL=12'
D=18"
SCL
INTERIM
GROUTED BOULDER DROP STRUCTURE
PROPOSED 5-FT WIDE WALK
EXISTING DRAINAGE EASEMENT
PROPOSED 3-SIDED CONCRETE BOX CULVERT
PERMANENT DRAINAGE EASEMENT
VTC
IP
CWA
SSA
L=27'
CL=10'
D=18"
26'
30'
PEAKVIEW PLACE APARTMENTS
PROPOSED CHECK STRUCTURE
TEMPORARY CONSTRUCTION EASEMENT
PROPOSED DRAINAGE EASEMENT
PROPOSED 5' WIDE WALK
PERMANENT ACCESS EASEMENT
APPLETREE CONDOMINIUMS
TEMPORARY CONSTRUCTION EASEMENT
EXISTING PARKING TO REMAIN OPEN
GROUTED BOULDER DROP STRUCTURE
10'
41'
SEE SHEET GESC4
PARKI
CIR.
5716
5720
5722
5724
5726
5728
5730
5732
5734
5736
5738
NORTH
0
20'
40'
SCALE: 1" = 20'

ARAPAHOE COUNTY CASE NUMBER XXX-XXX

CONSTRUCTION STAGING IN GOLDSMITH GULCH

STORAGE OF EQUIPMENT, FUEL, LUBRICANTS, CHEMICALS, AND WASTE WILL NOT BE ALLOWED IN THE 100-YEAR FLOODPLAIN. ANY DAMAGE CAUSED TO CURB, GUTTER, WALK AND ASPHALT WITHIN THE STAGING AREAS SHALL BE REPAIRED AT THE CONTRACTOR'S EXPENSE AND TO THE SATISFACTION OF ARAPAHOE COUNTY.

INITIAL AND INTERIM BMPS:
LIMITS OF CONSTRUCTION, STABILIZED STAGING AREA, CONCRETE WASHOUT AREA, SILT FENCE, CHECK DAM, WATER CONTROL AND DEWATERING, SEDIMENT CONTROL LOG, AND INLET PROTECTION.

CONCRETE WASHOUT AREA WILL BE UTILIZED TO CONTROL POLLUTION DISCHARGES ON THE SITE RESULTING FROM THE CLEANOUT OF CONSTRUCTION VEHICLES. THIS AREA SHOULD BE USED IN COMBINATION WITH ECO-PANS TO ENSURE THAT DISCHARGES FROM THE VEHICLES ARE COLLECTED.

ALL BMPS SHOWN ARE CONSIDERED INITIAL UNLESS OTHERWISE STATED.

CONTRACTOR MAY USE TEMPORARY CHAIN LINK FENCE AS AN ALTERNATE TO THE SEMSWA STANDARD DETAIL. CONTRACTOR SHALL GET APPROVAL FROM OWNER PRIOR TO INSTALLATION.

FINAL BMPS:
SOD, SEED, AND MULCH, WEED BURNER: ALL INITIAL AND INTERIM BMPS WILL BE REMOVED.

SEE CONSTRUCTION PLANS FOR DETAILS OF PERMANENT DRAINAGE FACILITIES SUCH AS CULVERTS, STORM DRAINS, AND INLETS.

SEE COVER SHEET OF SEMSWA STANDARD NOTES AND DETAILS (SHEET 1 OF 4) FOR LEGEND OF BMP NAMES AND SYMBOLS.

ALL PROPOSED SLOPES ON THIS PLAN HAVE A MAXIMUM SLOPE OF 3:1. ANY SLOPE BETWEEN 3:1 AND 4:1 WILL REQUIRE THE USE OF EROSION CONTROL BLANKETS OR MECHANICALLY BONDED FIBER MATRIX. IF THE WEATHER DOES NOT PERMIT THE INSTALLATION OF SOD ACCEPTANCE OF THE POST-CONSTRUCTION PERMANENT BMPS WILL NOT OCCUR UNTIL ALL POST-CONSTRUCTION PERMANENT BMPS ARE COMPLETE AND FINAL LANDSCAPE HAS BEEN ESTABLISHED.

AREA OF "LIMITS OF CONSTRUCTION" (LOC) = 1.59 AC

APPROXIMATELY 433 CY OF EXCESS MATERIAL WILL BE GENERATED FROM THE INSTALLATION OF DROP STRUCTURES AND BOX CULVERT.

LEGEND

▨	EXISTING ASPHALT
▬	FEMA EFFECTIVE 100-YR FLOODPLAIN
▭	EXISTING STORM SEWER

No.	DATE	REVISIONS	APPR.

ICON PROJECT NO. 11-033-GSU

PLAN	UTILITIES
DRAWN CR	RESEARCHED DDB
DESIGNED CR	DRAWN DDB
CHECKED MJU	CHECKED DDB

Southeast Metro Stormwater Authority

ICON ENGINEERING, INC.
8100 South Akron Street, Suite 300, Englewood, CO 80112
Phone (303) 221-0802 / Fax (303) 221-4019
WWW.ICONENG.COM

GOLDSMITH GULCH CHANNEL IMPROVEMENTS

GESC PLAN (INITIAL/INTERIM)

DATE
OCT 2012

SHEET
GESC3

PEAKVIEW PLACE APARTMENTS
PEAKVIEW PLACE APARTMENTS
PROPOSED DRAINAGE EASEMENT
PROPOSED STACKED BOULDER EDGE
PROPOSED EASEMENT
PROPOSED EASEMENT
SEE SHEET GESC3
CF
LOC
SCL
INTERIM
SCL
INTERIM
SCL
INTERIM
SCL
INTERIM
L=27'
CL=10'
D=18"
CF
CF
CF
CF
CF
IP
IP
LOC
LOC
LOC
PROPOSED GROUTED BOULDER SEDIMENT BASIN
PROPOSED PARKING SPACES
TEMPORARY CONSTRUCTION EASEMENT
PERMANENT ACCESS EASEMENT
CONSTRUCTION ACCESS
APPLETREE CONDOMINIUMS
COPPER TERRACE, LTD.
E. PEAKVIEW AVE.
UNINCORPORATED ARAPAHOE COUNTY
CITY OF CENTENNIAL
5734
5736
5738
5740
5742
5744
5746
NORTH
0
20'
40'
SCALE: 1" = 20'

CONSTRUCTION STAGING IN GOLDSMITH GULCH

STORAGE OF EQUIPMENT, FUEL, LUBRICANTS, CHEMICALS, AND WASTE WILL NOT BE ALLOWED IN THE 100-YEAR FLOODPLAIN. ANY DAMAGE CAUSED TO CURB, GUTTER, WALK AND ASPHALT WITHIN THE STAGING AREAS SHALL BE REPAIRED AT THE CONTRACTOR'S EXPENSE AND TO THE SATISFACTION OF ARAPAHOE COUNTY.

INITIAL AND INTERIM BMPS:
LIMITS OF CONSTRUCTION, STABILIZED STAGING AREA, CONCRETE WASHOUT AREA, SILT FENCE, CHECK DAM, WATER CONTROL AND DEWATERING, SEDIMENT CONTROL LOG, AND INLET PROTECTION.

CONCRETE WASHOUT AREA WILL BE UTILIZED TO CONTROL POLLUTION DISCHARGES ON THE SITE RESULTING FROM THE CLEANOUT OF CONSTRUCTION VEHICLES. THIS AREA SHOULD BE USED IN COMBINATION WITH ECO-PANS TO ENSURE THAT DISCHARGES FROM THE VEHICLES ARE COLLECTED.

ALL BMPS SHOWN ARE CONSIDERED INITIAL UNLESS OTHERWISE STATED.

CONTRACTOR MAY USE TEMPORARY CHAIN LINK FENCE AS AN ALTERNATE TO THE SEMSWA STANDARD DETAIL. CONTRACTOR SHALL GET APPROVAL FROM OWNER PRIOR TO INSTALLATION.

FINAL BMPS:
SOD, SEED, AND MULCH, WEED BURNER: ALL INITIAL AND INTERIM BMPS WILL BE REMOVED.

SEE CONSTRUCTION PLANS FOR DETAILS OF PERMANENT DRAINAGE FACILITIES SUCH AS CULVERTS, STORM DRAINS, AND INLETS.

SEE COVER SHEET OF SEMSWA STANDARD NOTES AND DETAILS (SHEET 1 OF 4) FOR LEGEND OF BMP NAMES AND SYMBOLS.

ALL PROPOSED SLOPES ON THIS PLAN HAVE A MAXIMUM SLOPE OF 3:1. ANY SLOPE BETWEEN 3:1 AND 4:1 WILL REQUIRE THE USE OF EROSION CONTROL BLANKETS OR MECHANICALLY BONDED FIBER MATRIX. IF THE WEATHER DOES NOT PERMIT THE INSTALLATION OF SOD ACCEPTANCE OF THE POST-CONSTRUCTION PERMANENT BMPS WILL NOT OCCUR UNTIL ALL POST-CONSTRUCTION PERMANENT BMPS ARE COMPLETE AND FINAL LANDSCAPE HAS BEEN ESTABLISHED.

AREA OF "LIMITS OF CONSTRUCTION" (LOC) = 1.59 AC

APPROXIMATELY 433 CY OF EXCESS MATERIAL WILL BE GENERATED FROM THE INSTALLATION OF DROP STRUCTURES AND BOX CULVERT.

LEGEND

▨	EXISTING ASPHALT
▬	FEMA EFFECTIVE 100-YR FLOODPLAIN
▭	EXISTING STORM SEWER

ARAPAHOE COUNTY CASE NUMBER XXX-XXX

No.	DATE	REVISIONS	APPR.

ICON PROJECT NO. 11-033-GSU

PLAN	UTILITIES
DRAWN **CR**	RESEARCHED **DDB**
DESIGNED **CR**	DRAWN **DDB**
CHECKED **MJU**	CHECKED **DDB**

Southeast Metro Stormwater Authority

URBAN DRAINAGE AND FLOOD CONTROL DISTRICT

ICON ENGINEERING, INC.
8100 South Akron Street, Suite 300, Englewood, CO 8012
Phone (303) 221-0802 / Fax (303) 221-4019
WWW.ICONENG.COM

GOLDSMITH GULCH CHANNEL IMPROVEMENTS

GESC PLAN (INITIAL/ITERIM)

DATE
OCT 2012

SHEET
GESC4

CHERRY CREEK FARM FILING NO. OUTLOT A
CHERRY CREEK FARM FILING NO. ONE BLOCK 1
PEAKVIEW PLACE APARTMENTS
APPLETREE CONDOMINIUMS
APPLETREE CONDOMINIUMS
CIR.
LOC
CF
SF
CD
SCL
INTERIM
SOD
VTC
IP
CWA
SSA
GROUTED BOULDER DROP STRUCTURE
PROPOSED 5-FT WIDE WALK
EXISTING DRAINAGE EASEMENT
PROPOSED 3-SIDED CONCRETE BOX CULVERT
PERMANENT DRAINAGE EASEMENT
PERMANENT ACCESS EASEMENT
PROPOSED CHECK STRUCTURE
TEMPORARY CONSTRUCTION EASEMENT
PROPOSED DRAINAGE EASEMENT
PROPOSED 5' WIDE WALK
TEMPORARY CONSTRUCTION EASEMENT
EXISTING PARKING TO REMAIN OPEN
GROUTED BOULDER DROP STRUCTURE
SEE SHEET GESC6
PARKIN
30'
26'
10'
41'
L=40'
CL=
D=18"
L=27'
CL=10'
D=18"
106+00
5716
5720
5722
5724
5726
5728
5730
5732
5734
5736
5738
NORTH
0 20' 40'
SCALE: 1" = 20'

ARAPAHOE COUNTY CASE NUMBER XXX-XXX

CONSTRUCTION STAGING IN GOLDSMITH GULCH

STORAGE OF EQUIPMENT, FUEL, LUBRICANTS, CHEMICALS, AND WASTE WILL NOT BE ALLOWED IN THE 100-YEAR FLOODPLAIN. ANY DAMAGE CAUSED TO CURB, GUTTER, WALK AND ASPHALT WITHIN THE STAGING AREAS SHALL BE REPAIRED AT THE CONTRACTOR'S EXPENSE AND TO THE SATISFACTION OF ARAPAHOE COUNTY.

INITIAL AND INTERIM BMPS:
LIMITS OF CONSTRUCTION, STABILIZED STAGING AREA, CONCRETE WASHOUT AREA, SILT FENCE, CHECK DAM, WATER CONTROL AND DEWATERING, SEDIMENT CONTROL LOG, AND INLET PROTECTION.

CONCRETE WASHOUT AREA WILL BE UTILIZED TO CONTROL POLLUTION DISCHARGES ON THE SITE RESULTING FROM THE CLEANOUT OF CONSTRUCTION VEHICLES. THIS AREA SHOULD BE USED IN COMBINATION WITH ECO-PANS TO ENSURE THAT DISCHARGES FROM THE VEHICLES ARE COLLECTED.

ALL BMPS SHOWN ARE CONSIDERED INITIAL UNLESS OTHERWISE STATED.

CONTRACTOR MAY USE TEMPORARY CHAIN LINK FENCE AS AN ALTERNATE TO THE SEMSWA STANDARD DETAIL. CONTRACTOR SHALL GET APPROVAL FROM OWNER PRIOR TO INSTALLATION.

FINAL BMPS:
SOD, SEED, AND MULCH, WEED BURNER: ALL INITIAL AND INTERIM BMPS WILL BE REMOVED.

SEE CONSTRUCTION PLANS FOR DETAILS OF PERMANENT DRAINAGE FACILITIES SUCH AS CULVERTS, STORM DRAINS, AND INLETS.

SEE COVER SHEET OF SEMSWA STANDARD NOTES AND DETAILS (SHEET 1 OF 4) FOR LEGEND OF BMP NAMES AND SYMBOLS.

ALL PROPOSED SLOPES ON THIS PLAN HAVE A MAXIMUM SLOPE OF 3:1. ANY SLOPE BETWEEN 3:1 AND 4:1 WILL REQUIRE THE USE OF EROSION CONTROL BLANKETS OR MECHANICALLY BONDED FIBER MATRIX. IF THE WEATHER DOES NOT PERMIT THE INSTALLATION OF SOD ACCEPTANCE OF THE POST-CONSTRUCTION PERMANENT BMPS WILL NOT OCCUR UNTIL ALL POST-CONSTRUCTION PERMANENT BMPS ARE COMPLETE AND FINAL LANDSCAPE HAS BEEN ESTABLISHED.

AREA OF "LIMITS OF CONSTRUCTION" (LOC) = 1.59 AC

APPROXIMATELY 433 CY OF EXCESS MATERIAL WILL BE GENERATED FROM THE INSTALLATION OF DROP STRUCTURES AND BOX CULVERT.

LEGEND

▨	EXISTING ASPHALT
▬	FEMA EFFECTIVE 100-YR FLOODPLAIN
▭	EXISTING STORM SEWER

No.	DATE	REVISIONS	APPR.

ICON PROJECT NO. 11-033-GSU

PLAN
DRAWN **CR**
DESIGNED **CR**
CHECKED **MJU**

UTILITIES
RESEARCHED **DDB**
DRAWN **DDB**
CHECKED **DDB**

Southeast Metro Stormwater Authority

URBAN DRAINAGE AND FLOOD CONTROL DISTRICT

ICON ENGINEERING, INC.
8100 South Akron Street, Suite 300, Englewood, CO 80112
Phone (303) 221-0802 / Fax (303) 221-4019
WWW.ICONENG.COM

GOLDSMITH GULCH CHANNEL IMPROVEMENTS

GESC PLAN (FINAL)

DATE
OCT 2012

SHEET
GESC5

CONSTRUCTION STAGING IN GOLDSMITH GULCH

STORAGE OF EQUIPMENT, FUEL, LUBRICANTS, CHEMICALS, AND WASTE WILL NOT BE ALLOWED IN THE 100-YEAR FLOODPLAIN. ANY DAMAGE CAUSED TO CURB, GUTTER, WALK AND ASPHALT WITHIN THE STAGING AREAS SHALL BE REPAIRED AT THE CONTRACTOR'S EXPENSE AND TO THE SATISFACTION OF ARAPAHOE COUNTY.

INITIAL AND INTERIM BMPS:
LIMITS OF CONSTRUCTION, STABILIZED STAGING AREA, CONCRETE WASHOUT AREA, SILT FENCE, CHECK DAM, WATER CONTROL AND DEWATERING, SEDIMENT CONTROL LOG, AND INLET PROTECTION.

CONCRETE WASHOUT AREA WILL BE UTILIZED TO CONTROL POLLUTION DISCHARGES ON THE SITE RESULTING FROM THE CLEANOUT OF CONSTRUCTION VEHICLES. THIS AREA SHOULD BE USED IN COMBINATION WITH ECO-PANS TO ENSURE THAT DISCHARGES FROM THE VEHICLES ARE COLLECTED.

ALL BMPS SHOWN ARE CONSIDERED INITIAL UNLESS OTHERWISE STATED.

CONTRACTOR MAY USE TEMPORARY CHAIN LINK FENCE AS AN ALTERNATE TO THE SEMSWA STANDARD DETAIL. CONTRACTOR SHALL GET APPROVAL FROM OWNER PRIOR TO INSTALLATION.

FINAL BMPS:
SOD, SEED, AND MULCH, WEED BURNER: ALL INITIAL AND INTERIM BMPS WILL BE REMOVED.

SEE CONSTRUCTION PLANS FOR DETAILS OF PERMANENT DRAINAGE FACILITIES SUCH AS CULVERTS, STORM DRAINS, AND INLETS.

SEE COVER SHEET OF SEMSWA STANDARD NOTES AND DETAILS (SHEET 1 OF 4) FOR LEGEND OF BMP NAMES AND SYMBOLS.

ALL PROPOSED SLOPES ON THIS PLAN HAVE A MAXIMUM SLOPE OF 3:1. ANY SLOPE BETWEEN 3:1 AND 4:1 WILL REQUIRE THE USE OF EROSION CONTROL BLANKETS OR MECHANICALLY BONDED FIBER MATRIX. IF THE WEATHER DOES NOT PERMIT THE INSTALLATION OF SOD ACCEPTANCE OF THE POST-CONSTRUCTION PERMANENT BMPS WILL NOT OCCUR UNTIL ALL POST-CONSTRUCTION PERMANENT BMPS ARE COMPLETE AND FINAL LANDSCAPE HAS BEEN ESTABLISHED.

AREA OF "LIMITS OF CONSTRUCTION" (LOC) = 1.59 AC

APPROXIMATELY 433 CY OF EXCESS MATERIAL WILL BE GENERATED FROM THE INSTALLATION OF DROP STRUCTURES AND BOX CULVERT.

LEGEND

▨	EXISTING ASPHALT
▬	FEMA EFFECTIVE 100-YR FLOODPLAIN
▭	EXISTING STORM SEWER

PEAKVIEW PLACE APARTMENTS
PEAKVIEW PLACE APARTMENTS
PROPOSED DRAINAGE EASEMENT
PROPOSED STACKED BOULDER EDGE
PROPOSED EASEMENT
PROPOSED EASEMENT
SEE SHEET GESC5
CF
SOD
SCL
INTERIM
LOC
SCL
INTERIM
SCL
INTERIM
SCL
INTERIM
SOD
SOD
CF
IP
IP
CF
LOC
CF
CF
PROPOSED PARKING SPACES
PROPOSED GROUTED BOULDER SEDIMENT BASIN
LOC
TEMPORARY CONSTRUCTION EASEMENT
PERMANENT ACCESS EASEMENT
CONSTRUCTION ACCESS
LOC
UNINCORPORATED ARAPAHOE COUNTY
CITY OF CENTENNIAL
E. PEAKVIEW AVE.
APPLETREE CONDOMINIUMS
COPPER TERRACE, LTD.
5736
5738
5740
5742
5744
5746
ASPHALT
SS
ST
NORTH
0
20'
40'
SCALE: 1" = 20'

ARAPAHOE COUNTY CASE NUMBER XXX-XXX

No.	DATE	REVISIONS	APPR.

ICON PROJECT NO. 11-033-GSU

PLAN	UTILITIES
DRAWN CR	RESEARCHED DDB
DESIGNED CR	DRAWN DDB
CHECKED MJU	CHECKED DDB

Southeast Metro Stormwater Authority

ICON ENGINEERING, INC.
8100 South Akron Street, Suite 300, Englewood, CO 80112
Phone (303) 221-0802 / Fax (303) 221-4019
WWW.ICONENG.COM

GOLDSMITH GULCH CHANNEL IMPROVEMENTS

GESC PLAN (FINAL)

DATE
OCT 2012

SHEET
GESC6

LEGEND

▬	FEMA EFFECTIVE 100-YR FLOODPLAIN
— —	LIMITS OF CONSTRUCTION
▨	ASPHALT
▨	WATER CONTROL EMBANKMENT BERM (INSTALL PLASTIC LINING PER GESC DETAIL)
⬅	DRAINAGE ARROWS

WATER CONTROL NOTES:
Ditch diversion and temporary slope diversion is being shown as the water control BMPs. The contractor may choose an alternative method. This shall be described in the submitted water control plan.

SEMSWA General Notes:

1. The contractor shall develop and submit a water plan to Arapahoe County & SEMSWA for review and approval prior to beginning construction. Water control includes channel base flow, stormwater runoff, and groundwater. The contractor's water control plan shall include all means and methods necessary in conveying water through and from the project site so that water quality or property downstream of the project limits are not impacted negatively from the project's construction activities.
2. The contractor's means and methods included in the contractor's approved water control plan may include; but are not limited to the following: plastic lined diversion ditches, temporary piping, hoses, cutoff walls, check dams, pumps, generators, sound proofing, temporary power, sheet pile, shoring, sediment traps, sediment basins, filter bags, reinforced rock berms, stream crossings, riprap pads, rip rap, crushed rock and any other water control measures necessary and approved by Arapahoe County & SEMSWA.
3. Groundwater is to be kept separate from stormwater. If groundwater is combined with stormwater the contractor will need to complete and obtain a dewatering permit from SEMSWA.
4. Given the nature of the project site's steep terrain and scope of work, the contractor's water control plan and proposal shall account for the need to relocate water control measures as needed based on the contractor's actual construction sequence and selected means and methods.
5. Water quality shall be one of the contractor's primary concerns. The contractor's implemented water control plan will be inspected daily. If for any reason the contractor's implemented water control plan needs corrective action or if the contractor is directed by Arapahoe County & SEMSWA or the owner's representative to make repairs; the contractor shall make such corrections immediately.
6. The approximate 2-yr discharge for Goldsmith Gulch is 66 cfs. The average base flow rate is approximately 20-cfs.
7. All stream diversion ditches need to be plastic lined at a minimum.
8. All temporary stream crossings shall be completely rip rap reinforced and have plastic lining under the rip rap. The contractor's selected stream crossing shall accommodate passage for base flows and at no time shall contractors' equipment have direct contact with any stream flow.
9. Local discharges are conveyed to the construction area through various sized storm sewers as shown on the drawings. Water diversion shall be installed at the end of the each storm sewer. The diversions shall be installed prior to completing the work in the area of each outfall. This diversion shall be maintained during construction of the local improvements and can be removed upon completion of work downstream of the outfall.

Phasing Notes:
The water control plan shows the construction taking place in four water control phases, however, channel grading is proposed between phases. The contractor shall control water in any disturbed areas.

Phase 1:
Culvert and Lower Drop Structure:

1. Prior to construction of the proposed culvert and lower drop structure the contractor shall install a compacted embankment berm and a pump bypass system as presented on these drawings. A minimum 6-inch pump shall be used to divert water around the impacted area during the construction of the proposed culvert, headwalls, concrete pan and grouted boulder drop. This work shall not be completed until the weather forecast indicates dry weather for the period of time it takes to complete the construction.
2. The berm and pump shall be removed upon completion and acceptance of the improvements downstream of the compacted embankment berm.

Phase 2:
Check Structure:

1. A water control berm with a 30-inch HDPE pipe needs to be installed upstream of the proposed check structure as shown on these drawings. This shall be utilized to install the sheetpile at this location as well as downstream channel grading.

Phase 3:
Upper Drop Structure:

1. Prior to construction of the upper drop structure the contractor shall install a compacted embankment berm and a pump bypass system as presented on these drawings. A minimum 6-inch pump shall be used to divert water around the impacted area during the construction of the grouted boulder drop.
2. The berm and pump shall be removed upon completion and acceptance of the improvements downstream of the compacted embankment berm.

Phase 4:
Boulder Edging and Improvements Upstream of the First Drop Structure:

1. Upstream of Peakview Avenue the flows shall be diverted through the 36" RCP with a water control berm. A 30" HDPE Pipe shall be installed as presented on the plans north of Peakview Avenue. The contractor shall use rubber gaskets between the existing pipes and the HDPE water control pipe to minimize leakage.
2. The 30" HDPE Pipe shall divert the flow to the limits of the boulder edging as shown on plans. All boulder edging shall be installed in a dry channel bed. No live flows shall be present during the time of boulder installation.
3. This pipe diversion shall remain in place until all upstream improvements are completed and approved by the owner.
4. Contractor shall design and install water control embankment to allow 100-yr peak discharges to over top the embankment without causing damage to the embankment and local flooding structure.

CHERRY CREEK FARM FILING NO. TWO
CHERRY CREEK FARM FILING NO. ONE
PEAKVIEW PLACE APARTMENTS
APPLETREE CONDOMINIUMS
CIR.
LOC
CD
DD
DW
VTC
CF
IP
CWA
TSD
EXISTING DRAINAGE EASEMENT
PERMANENT DRAINAGE EASEMENT
EXISTING 24" RCP
PERMANENT ACCESS EASEMENT
TEMPORARY CONSTRUCTION EASEMENT
PROPOSED CHECK STRUCTURE
30" HDPE WATER CONTROL PIPE
EXISTING PIPES TO BE REMOVED
PROPOSED DRAINAGE EASEMENT
WATER CONTROL EMBANKMENT BERM FOR 30" HDPE. CONTRACTOR TO PROVIDE MIN. 12" COVER FOR HDPE PIPE. INSTALL PLASTIC LINING OVER THE BERM PER GESC DETAIL.
EXISTING 19"X30" HERCP
SEE SHEET GESC8
5716
5720
5722
5724
5726
5728
5730
5732
5734
5736
5738
106+00
NORTH
0
20'
40'
SCALE: 1"=20'

ARAPAHOE PROJECT NUMBER XXX-XXX

No.	DATE	REVISIONS	APPR.

ICON PROJECT NO. 11-033-GSU

PLAN	UTILITIES
DRAWN CR	RESEARCHED DDB
DESIGNED CR	DRAWN DDB
CHECKED MJU	CHECKED DDB

Southeast Metro Stormwater Authority

ICON ENGINEERING, INC.
8100 South Akron Street, Suite 300, Englewood, CO 8012
Phone (303) 221-0802 / Fax (303) 221-4019
WWW.ICONENG.COM

GOLDSMITH GULCH CHANNEL IMPROVEMENTS

WATER CONTROL PLAN

DATE
OCT 2012

SHEET
GESC7

LEGEND
FEMA EFFECTIVE 100-YR FLOODPLAIN
LIMITS OF CONSTRUCTION
ASPHALT
WATER CONTROL EMBANKMENT BERM (INSTALL PLASTIC LINING PER GESC DETAIL)
DRAINAGE ARROWS
PEAKVIEW PLACE APARTMENTS
APPLETREE CONDOMINIUMS
SEE SHEET GESC7
PROPOSED EASEMENT
TSD
30" HDPE WATER CONTROL PIPE
LOC
DW
CD
PROPOSED EASEMENT
30" HDPE WATER CONTROL PIPE INSERTED INTO EXISTING 36" RCP, MIN. 10FT.
UNINCORPORATED ARAPAHOE COUNTY
CITY OF CENTENNIAL
E. PEAKVIEW AVE.
IP
EXISTING 12" PVC
PERMANENT ACCESS EASEMENT
TEMPORARY CONSTRUCTION EASEMENT
EXISTING 24" RCP
EXISTING PAN TO BE REMOVED
WATER CONTROL EMBANKMENT BERM FOR 30" HDPE. CONTRACTOR TO PROVIDE MIN. 12" COVER FOR HDPE PIPE. INSTALL PLASTIC LINING OVER THE BERM PER GESC DETAIL.
30" HDPE WATER CONTROL PIPE INSERTED INTO EXISTING 36" RCP, MIN. 10FT. (A PUMP MAY BE USED IN LIEU OF TSD DURING THE INSTALLATION OF SEDIMENT BASIN)
ST
5734
5736
5738
5740
5742
5744
5746
NORTH
0 20' 40'
SCALE: 1"=20'

WATER CONTROL NOTES:

Ditch diversion and temporary slope diversion is being shown as the water control BMPs. The contractor may choose an alternative method. This shall be described in the submitted water control plan.

SEMSWA General Notes:

1. The contractor shall develop and submit a water plan to Arapahoe County & SEMSWA for review and approval prior to beginning construction. Water control includes channel base flow, stormwater runoff, and groundwater. The contractor's water control plan shall include all means and methods necessary in conveying water through and from the project site so that water quality or property downstream of the project limits are not impacted negatively from the project's construction activities.
2. The contractor's means and methods included in the contractor's approved water control plan may include; but are not limited to the following: plastic lined diversion ditches, temporary piping, hoses, cutoff walls, check dams, pumps, generators, sound proofing, temporary power, sheet pile, shoring, sediment traps, sediment basins, filter bags, reinforced rock berms, stream crossings, riprap pads, rip rap, crushed rock and any other water control measures necessary and approved by Arapahoe County & SEMSWA.
3. Groundwater is to be kept separate from stormwater. If groundwater is combined with stormwater the contractor will need to complete and obtain a dewatering permit from SEMSWA.
4. Given the nature of the project site's steep terrain and scope of work, the contractor's water control plan and proposal shall account for the need to relocate water control measures as needed based on the contractor's actual construction sequence and selected means and methods.
5. Water quality shall be one of the contractor's primary concerns. The contractor's implemented water control plan will be inspected daily. If for any reason the contractor's implemented water control plan needs corrective action or if the contractor is directed by Arapahoe County & SEMSWA or the owner's representative to make repairs; the contractor shall make such corrections immediately.
6. The approximate 2-yr discharge for Goldsmith Gulch is 66 cfs. The average base flow rate is approximately 20-cfs.
7. All stream diversion ditches need to be plastic lined at a minimum.
8. All temporary stream crossings shall be completely rip rap reinforced and have plastic lining under the rip rap. The contractor's selected stream crossing shall accommodate passage for base flows and at no time shall contractors' equipment have direct contact with any stream flow.
9. Local discharges are conveyed to the construction area through various sized storm sewers as shown on the drawings. Water diversion shall be installed at the end of the each storm sewer. The diversions shall be installed prior to completing the work in the area of each outfall. This diversion shall be maintained during construction of the local improvements and can be removed upon completion of work downstream of the outfall.

Phasing Notes:

The water control plan shows the construction taking place in four water control phases, however, channel grading is proposed between phases. The contractor shall control water in any disturbed areas.

Phase 1:
Culvert and Lower Drop Structure:

1. Prior to construction of the proposed culvert and lower drop structure the contractor shall install a compacted embankment berm and a pump bypass system as presented on these drawings. A minimum 6-inch pump shall be used to divert water around the impacted area during the construction of the proposed culvert, headwalls, concrete pan and grouted boulder drop. This work shall not be completed until the weather forecast indicates dry weather for the period of time it takes to complete the construction.
2. The berm and pump shall be removed upon completion and acceptance of the improvements downstream of the compacted embankment berm.

Phase 2:
Check Structure:

1. A water control berm with a 30-inch HDPE pipe needs to be installed upstream of the proposed check structure as shown on these drawings. This shall be utilized to install the sheetpile at this location as well as downstream channel grading.

Phase 3:
Upper Drop Structure:

1. Prior to construction of the upper drop structure the contractor shall install a compacted embankment berm and a pump bypass system as presented on these drawings. A minimum 6-inch pump shall be used to divert water around the impacted area during the construction of the grouted boulder drop.
2. The berm and pump shall be removed upon completion and acceptance of the improvements downstream of the compacted embankment berm.

Phase 4:
Boulder Edging and Improvements Upstream of the First Drop Structure:

1. Upstream of Peakview Avenue the flows shall be diverted through the 36" RCP with a water control berm. A 30" HDPE Pipe shall be installed as presented on the plans north of Peakview Avenue. The contractor shall use rubber gaskets between the existing pipes and the HDPE water control pipe to minimize leakage.
2. The 30" HDPE Pipe shall divert the flow to the limits of the boulder edging as shown on plans. All boulder edging shall be installed in a dry channel bed. No live flows shall be present during the time of boulder installation.
3. This pipe diversion shall remain in place until all upstream improvements are completed and approved by the owner.
4. Contractor shall design and install water control embankment to allow 100-yr peak discharges to over top the embankment without causing damage to the embankment and local flooding structure.

ARAPAHOE PROJECT NUMBER XXX-XXX

No.	DATE	REVISIONS	APPR.

ICON PROJECT NO. 11-033-GSU

PLAN	UTILITIES
DRAWN CR	RESEARCHED DDB
DESIGNED CR	DRAWN DDB
CHECKED MJU	CHECKED DDB

Southeast Metro Stormwater Authority

URBAN DRAINAGE AND FLOOD CONTROL DISTRICT

ICON ENGINEERING, INC.
8100 South Akron Street, Suite 300, Englewood, CO 80112
Phone (303) 221-0802 / Fax (303) 221-4019
WWW.ICONENG.COM

GOLDSMITH GULCH CHANNEL IMPROVEMENTS

WATER CONTROL PLAN

DATE
OCT 2012

SHEET
GESC8

GRADING, EROSION, AND SEDIMENT CONTROL (GESC) GENERAL NOTES

1. THE SOUTHEAST METRO STORMWATER AUTHORITY (SEMSWA) EXECUTIVE DIRECTOR'S SIGNATURE AFFIXED TO THIS DOCUMENT INDICATES SEMSWA HAS REVIEWED THE DOCUMENT AND FOUND IT IN GENERAL COMPLIANCE WITH CENTENNIAL'S LAND DEVELOPMENT CODE AND/OR THE GRADING, EROSION AND SEDIMENT CONTROL (GESC) CRITERIA MANUAL. THE DIRECTOR THROUGH ACCEPTANCE OF THIS DOCUMENT, ASSUMES NO RESPONSIBILITY (OTHER THAN AS STATED ABOVE) FOR THE COMPLETENESS AND/OR ACCURACY OF THESE DOCUMENTS.
2. THE ADEQUACY OF THIS GESC PLAN LIES WITH THE ORIGINAL DESIGN ENGINEER.
3. THE GESC PLAN SHALL BE CONSIDERED VALID FOR TWO (2) YEARS FROM THE DATE OF ACCEPTANCE BY SEMSWA, AFTER WHICH TIME THE PLAN SHALL BE VOID AND WILL BE SUBJECT TO RE-REVIEW AND RE-ACCEPTANCE BY SEMSWA. PLANS MUST CONFORM TO CURRENT REQUIREMENTS.
4. ALL MATERIALS AND WORKMANSHIP SHALL BE SUBJECT TO INSPECTION BY SEMSWA'S INSPECTION DIVISION. SEMSWA RESERVES THE RIGHT TO ACCEPT OR REJECT ANY SUCH MATERIALS AND WORKMANSHIP THAT DOES NOT CONFORM TO THE GESC MANUAL, GESC PLAN OR GESC PERMIT.
5. THE PLACEMENT OF EROSION AND SEDIMENT CONTROL BEST MANAGEMENT PRACTICES (BMPs) SHALL BE IN ACCORDANCE WITH THE SEMSWA – ACCEPTED GESC PLAN AND THE CITY OF CENTENNIAL GESC MANUAL.
6. ANY VARIATION IN MATERIAL, TYPE OR LOCATION OF EROSION AND SEDIMENT CONTROL BMPs FROM THE SEMSWA – ACCEPTED GESC PLAN WILL REQUIRE APPROVAL FROM AN ACCOUNTABLE REPRESENTATIVE OF SEMSWA.
7. AFTER THE GESC PLAN HAS BEEN ACCEPTED, THE GESC PERMIT APPLIED FOR THE GESC FIELD MANUAL OBTAINED AND REVIEWED, THE CONTRACTOR MAY INSTALL THE INITIAL-STAGE EROSION AND SEDIMENT CONTROL BMPS INDICATED ON THE ACCEPTED GESC PLAN.
8. THE FIRST BMP TO BE INSTALLED ON THE SITE SHALL BE CONSTRUCTION FENCE, MARKERS, OR OTHER APPROVED MEANS OF DEFINING THE LIMITS OF CONSTRUCTION, INCLUDING CONSTRUCTION LIMITS ADJACENT TO STREAM CORRIDORS AND OTHER AREAS TO BE PRESERVED.
9. AFTER INSTALLATION OF THE INITIAL-STAGE EROSION AND SEDIMENT CONTROL BMPs, THE PERMITTEE SHALL CALL THE INSPECTION DIVISION TO SCHEDULE A PRECONSTRUCTION MEETING AT THE PROJECT SITE. THE REQUEST SHALL BE MADE A MINIMUM OF THREE BUSINESS DAYS PRIOR TO THE REQUESTED MEETING TIME. NO CONSTRUCTION ACTIVITIES SHALL BE PLANNED WITHIN 24 HOURS AFTER THE PRECONSTRUCTION MEETING.
10. THE OWNER OR OWNER'S REPRESENTATIVE, THE GESC MANAGER, THE GENERAL CONTRACTOR, AND THE GRADING SUBCONTRACTOR, IF DIFFERENT FROM THE GENERAL CONTRACTOR, MUST ATTEND THE PRECONSTRUCTION MEETING. IF ANY OF THE REQUIRED PARTICIPANTS FAIL TO ATTEND THE PRECONSTRUCTION MEETING, OR IF THE GESC FIELD MANUAL IS NOT ON SITE, OR IF THE INSTALLATION OF THE INITIAL BMPs ARE NOT APPROVED BY THE SEMSWA INSPECTOR, THE APPLICANT WILL HAVE TO PAY A REINSPECTION FEE, ADDRESS ANY PROBLEMS WITH BMP INSTALLATION, AND CALL TO RESCHEDULE THE MEETING, WITH A CORRESPONDING DELAY IN THE START OF CONSTRUCTION.
11. CONSTRUCTION SHALL NOT BEGIN UNTIL THE SEMSWA INSPECTOR APPROVES THE INSTALLATION OF THE INITIAL BMPs AND THE APPROVED GESC PERMIT IS PICKED UP FROM THE COUNTY AND IS IN-HAND ON THE SITE. THE COMPLETED PERMIT WILL BE AVAILABLE WITHIN 24-HOURS AFTER THE INSTALLATION OF THE INITIAL BMPs ARE APPROVED.
12. THE GESC MANAGER SHALL STRICTLY ADHERE TO THE SEMSWA APPROVED LIMITS OF CONSTRUCTION AT ALL TIMES. THE SEMSWA INSPECTION DIVISION MUST APPROVE ANY CHANGES TO THE LIMITS OF CONSTRUCTION AND, AT THE DISCRETION OF THE INSPECTION DIVISION, ADDITIONAL EROSION/SEDIMENT CONTROLS MAY BE REQUIRED IN ANY ADDITIONAL AREAS OF CONSTRUCTION.
13. THE MAXIMUM AREA OF CONSTRUCTION SHALL BE LIMITED TO 40 ACRES (70 ACRES IF APPROVED FOR SOIL MITIGATION OPERATIONS) TO REDUCE THE AMOUNT OF LAND DISTURBED AT ANY ONE TIME. LARGER SITES SHALL BE DIVIDED INTO PHASES THAT ARE EACH 40 (OR 70) ACRES OR LESS IN SIZE. THESE PROJECTS SHALL CONDUCT GRADING ACTIVITIES IN ACCORDANCE WITH THE ACCEPTED GESC PLAN. BMP INSTALLATION AND APPROVAL BY SEMSWA AT THE START AND COMPLETION OF EACH PHASE SHALL BE CONDUCTED IN ACCORDANCE WITH THE PROCEDURES OUTLINED IN THE GESC MANUAL AND/OR GESC FIELD MANUAL.
14. PRIOR TO ACTUAL CONSTRUCTION, THE PERMITTEE SHALL VERIFY THE LOCATION OF EXISTING UTILITIES. FOR INFORMATION, CONTACT THE DENVER INTER-UTILITY GROUP AT 1-800-922-1987 OR FAX AT (303)534-6700.
15. NATURAL VEGETATION SHALL BE RETAINED AND PROTECTED WHEREVER POSSIBLE. EXPOSURE OF SOIL TO EROSION BY REMOVAL OR DISTURBANCE OF VEGETATION SHALL BE LIMITED TO THE AREA REQUIRED FOR IMMEDIATE CONSTRUCTION OPERATIONS.
16. THE GESC PERMIT SHALL BE VALID FOR A PERIOD OF ONE (2) YEARS.
17. A COPY OF THE GESC PERMIT, ACCEPTED GESC PLANS AND THE GESC FIELD MANUAL SHALL BE ON SITE AT ALL TIMES.
18. THE GESC MANAGER SHALL BE RESPONSIBLE PARTY FOR ENSURING THAT THE SITE REMAINS IN COMPLIANCE WITH THE GESC PERMIT AND SHALL BE THE PERMITTEE'S CONTACT PERSON WITH SEMSWA FOR ALL MATTERS PERTAINING TO THE GESC PERMIT. THE GESC MANAGER SHALL ON THE SITE AS NECESSARY TO ENSURE THE GESC REQUIREMENTS ARE BEING IMPLEMENTED, AND (ALONG WITH THE ALTERNATE GESC MANAGER) SHALL PROVIDE SEMSWA WITH A 24-HOUR EMERGENCY CONTACT NUMBER. IN THE EVENT THAT THE CONTRACTOR'S GESC MANAGER IS NOT ON SITE AND CANNOT BE REACHED DURING A VIOLATION, THE ALTERNATE GESC MANAGER SHALL BE CONTACTED. IF NEITHER THE GESC MANAGER NOR ALTERNATE GESC MANAGE CAN BE CONTACTED DURING ANY VIOLATION, WITHIN 24 HOURS, VIOLATION MAY BE ISSUED TO THE PERMITTE(S).
19. ALL CONSTRUCTION TRAFFIC MUST ENTER/EXIT THE SITE THROUGH THE SEMSWA-APPROVED ACCESS POINT. A VEHICLE TRACKING CONTROL PAD IS REQUIRED AT ALL ACCESS POINTS ON THE SITE. ADDITIONAL STABILIZED CONSTRUCTION ENTRANCES MAY BE ADDED WITH AUTHORIZATION FROM THE SEMSWA INSPECTION DIVISION.

GRADING, EROSION, AND SEDIMENT CONTROL (GESC) GENERAL NOTES PAGE 2

1. THE GESC MANAGER IS RESPONSIBLE FOR CLEANUP OF SEDIMENT OR CONSTRUCTION DEBRIS TRACKED ONTO ADJACENT PAVED AREAS. PAVED AREAS INCLUDING STREETS ARE TO BE KEPT CLEAN THROUGHOUT BUILD-OUT AND SHALL BE CLEANED, WITH A STREET SWEEPER OR SIMILAR DEVICE, AT FIRST NOTICE OF ACCIDENTAL TRACKING OR AT THE DISCRETION OF THE SEMSWA GESC INSPECTOR. STREET WASHING IS NOT ALLOWED. SEMSWA RESERVES THE RIGHT TO REQUIRE ADDITIONAL MEASURES TO ENSURE AREA STREETS ARE KEPT FREE OF SEDIMENT AND/OR CONSTRUCTION DEBRIS.
2. APPROVED EROSION AND SEDIMENT CONTROL BMPs SHALL BE MAINTAINED AND KEPT IN GOOD REPAIR FOR THE DURATION OF THIS PROJECT. AT A MINIMUM, THE GESC MANAGER SHALL INSPECT ALL BMPs IN ACCORDANCE WITH THE ACCEPTED GESC PLAN AND GESC MANUAL. ALL NECESSARY MAINTENANCE AND REPAIR ACTIVITIES SHALL BE COMPLETED WITHIN 48 HOURS. ACCUMULATED SEDIMENT AND CONSTRUCTION DEBRIS SHALL BE REMOVED AND PROPERLY DISPOSED.
3. STRAW BALES ARE NOT A SEMSWA GESC-ACCEPTED SEDIMENT CONTROL BMP.
4. TOPSOIL SHALL BE STRIPPED AND STOCKPILED IN THE LOCATION SHOWN ON THE ACCEPTED GESC PLAN. THE TOPSOIL STOCKPILE(S) SHALL FOLLOW ALL STOCKPILING CRITERIA DESCRIBED IN THE GESC MANUAL. IT SHALL BE NOTED THAT THERE IS TOPSOIL CERTIFICATION REQUIRED AT THE INITIAL CLOSE-OUT INSPECTION OF THE GESC PERMIT.
5. THE ACCEPTED GESC PLAN MAY REQUIRE CHANGES OR ALTERATIONS AFTER APPROVAL TO MEET CHANGING SITE OR PROJECT CONDITIONS OR TO ADDRESS INEFFICIENCIES IN DESIGN OR INSTALLATION. THE GESC MANAGER SHALL OBTAIN PRIOR APPROVAL FROM THE DESIGN ENGINEER AND SEMSWA FOR ANY PROPOSED CHANGES.
6. LINING OF TEMPORARY SWALES AND DITCHES SHALL BE IN ACCORDANCE WITH THE GESC CRITERIA MANUAL.
7. NO PERMANENT EARTH SLOPES GREATER THAN 3:1 SHALL BE ALLOWED.
8. ANY SETTLEMENT OR SOIL ACCUMULATIONS BEYOND THE LIMITS OF CONSTRUCTION DUE TO GRADING OR EROSION SHALL BE REPAIRED IMMEDIATELY BY THE GESC MANAGER. THE GESC MANAGER SHALL BE HELD RESPONSIBLE FOR OBTAINING ACCESS RIGHTS TO ADJACENT PROPERTY, IF NEEDED, AND REMEDIATING ANY ADVERSE IMPACTS TO ADJACENT WATERWAYS, WETLANDS, PROPERTIES, ETC. RESULTING FROM WORK DONE AS PART OF THIS PROJECT.
9. A WATER SOURCE SHALL BE AVAILABLE ON SITE DURING EARTHWORK OPERATIONS AND UTILIZED AS REQUIRED TO MINIMIZE DUST FROM EARTHWORK EQUIPMENT AND WIND.
10. SOILS THAT WILL BE STOCKPILED FOR MORE THAN THIRTY (30) DAYS SHALL BE SEEDED AND MULCHED WITHIN FOURTEEN (14) DAYS OF STOCKPILE CONSTRUCTION. NO STOCKPILES SHALL BE PLACED WITHIN ONE HUNDRED (100) FEET OF A DRAINAGE WAY UNLESS APPROVED BY SEMSWA.
11. ALL CHEMICAL OR HAZARDOUS MATERIAL SPILLS WHICH MAY ENTER WATERS OF THE STATE OF COLORADO, WHICH INCLUDE BUT ARE NOT LIMITED TO, SURFACE WATER, GROUND WATER AND DRY GULLIES OR STORM SEWER LEADING TO SURFACE WATER, SHALL BE IMMEDIATELY REPORTED TO THE CDPHE PER CRS 25-8-601, AND SEMSWA. RELEASES OF PETROLEUM PRODUCTS AND CERTAIN HAZARDOUS SUBSTANCES LISTED UNDER THE FEDERAL CLEAN WATER ACT (40 CFR PART 116) MUST BE REPORTED TO THE NATIONAL RESPONSE CENTER AS WELL AS THE CDPHE. CONTACT INFORMATION FOR CDPHE, SEMSWA AND THE NATIONAL RESPONSE CENTER CAN BE FOUND IN APPENDIX A. SPILLS THAT POSE AN IMMEDIATE RISK TO HUMAN LIFE SHALL BE REPORTED TO 911. FAILURE TO REPORT AND CLEAN UP ANY SPILL SHALL RESULT IN ISSUANCE OF A STOP WORK ORDER. TO REPORT SPILLS TO SEMSWA CALL 303-858-8844.
12. ALL WORK ON SITE SHALL STAY A MINIMUM OF ONE HUNDRED (100) FEET AWAY FROM ANY DRAINAGE WAY, WETLAND, ETC. UNLESS OTHERWISE NOTED ON AN ACCEPTED SEMSWA GESC PLAN.
13. ALL PROJECTS SHALL BALANCE EARTHWORK QUANTITIES ON SITE. IN THE EVENT A VARIANCE IS GRANTED BY SEMSWA TO ALLOW IMPORT OR EXPORT OF MATERIAL, THE PERMITTEE SHALL HAVE A GESC PERMIT IN HAND FOR THE IMPORT OR EXPORT SITE PRIOR TO ANY TRANSPORTING OF EARTHEN MATERIAL. THE GESC MANAGER SHALL NOTIFY THE SEMSWA GESC INSPECTOR OF THE LOCATION AND PERMIT NUMBERS OF BOTH THE EXPORTING AND IMPORTING SITES PRIOR TO ANY IMPORT/ EXPORT OPERATIONS.
14. THE USE OF REBAR, STEEL STAKES OR STEEL FENCE POSTS FOR STAKING OR SUPPORT OF ANY EROSION OR SEDIMENT CONTROL BMP IS PROHIBITED (EXCEPT STEEL TEE-POSTS FOR USE IN SUPPORTING CONSTRUCTION FENCE).
15. THE CLEANING OF CONCRETE DELIVERY TRUCK CHUTES IS RESTRICTED TO APPROVED CONCRETE WASH OUT LOCATIONS ON THE JOB SITE. THE DISCHARGE OF WATER CONTAINING WASTE CONCRETE TO THE STORM SEWER SYSTEM IS PROHIBITED. ALL CONCRETE WASTE SHALL BE PROPERLY CLEANED UP AND DISPOSED AT AN APPROPRIATE LOCATION.
16. ALL DEWATERING ON SITE SHALL BE COORDINATED WITH A SEMSWA GESC INSPECTOR AND BE FREE OF SEDIMENT IN ACCORDANCE WITH THE GESC CRITERIA MANUAL.
17. ALL PERMANENT INSTALLATIONS OF PIPES FOR STORM SEWERS, SLOPE DRAINS, AND CULVERTS, TOGETHER WITH RIPRAP APRONS OR OTHER INLET AND OUTLET PROTECTION, REQUIRE INSPECTION BY SEMSWA ENGINEERING (SEPARATE FROM GESC INSPECTIONS).
18. ALL DISTURBED AREAS SHALL BE STABILIZED IN ACCORDANCE WITH THE GESC CRITERIA MANUAL WITHIN 14 DAYS OF SUBSTANTIAL COMPLETION OF GRADING, INCLUDING AREAS TO REMAIN DORMANT FOR LONGER THAN 30 DAYS, WHICHEVER IS LESS. THIS MAY REQUIRE MULTIPLE MOBILIZATIONS FOR SEEDING AND MULCHING.
19. HYDRAULIC SEEDING AND HYDRAULIC MULCHING ARE NOT AN ACCEPTABLE METHOD OF SEEDING OR MULCHING IN THE CITY OF CENTENNIAL.
20. NO CURB AND GUTTER PERMITS SHALL BE ISSUED UNTIL ALL DISTURBED AREAS ARE DRILL SEEDED AND CRIMP MULCHED.
21. NO PAVING PERMITS SHALL BE ISSUED UNTIL ALL INTERIM INLET PROTECTION IS INSTALLED AND APPROVED BY THE GESC INSPECTOR.

DETAIL NO.	SHEET NO.		BMP LEGEND	
1	①	▨	CD	CHECK DAM
2	①	▨	CB	COMPOST BLANKET
3	①	▲	CFB	COMPOST FILTER BERM
4	①	☐	CWA	CONCRETE WASHOUT AREA
5	①	—□—□—	CF	CONSTRUCTION FENCE
6	①	□ □	CM	CONSTRUCTION MARKERS
7	①	←— ○	DW	DEWATERING
8	②	—◄——◄—	DD	DIVERSION DITCH
9	②	▨	ECB	EROSION CONTROL BLANKET
10	②		IP	INLET PROTECTION
11	②	▨	RCD	REINFORCED CHECK DAM
12	②	▨	RRB	REINFORCED ROCK BERM
13	②		RRC	RRB FOR CULVERT PROTECTION
14	②		SB	SEDIMENT BASIN
15	③	▨	SCL	SEDIMENT CONTROL LOG
16	③		ST	SEDIMENT TRAP
17	③	▨	SM	SEEDING AND MULCHING
18	③	——X——	SF	SILT FENCE
19	③	▨	SSA	STABILIZED STAGING AREA
20	④		SR	SURFACE ROUGHENING
21	③	═←═	TSD	TEMPORARY SLOPE DRAIN
22	④	▨	TSC	TEMPORARY STREAM CROSSING
23	③	☐	TER	TERRACING
24	③	▨	VTC	VEHICLE TRACKING CONTROL
25	③	▨	WW	VTC WITH WHEEL WASH
26	④		CS	CURB SOCK
	①			ROCK AND RIPRAP GRADATIONS
		▬ ▬	LOC	LIMITS OF CONSTRUCTION

ROCK AND RIPRAP GRADATIONS

TABLE 1. RIPRAP GRADATIONS

D_{50} MEDIAN STONE SIZE (INCHES)	% OF MATERIAL SMALLER THAN TYPICAL STONE	TYPICAL STONE EQUIVALENT DIAMETER (INCHES)	TYPICAL STONE WEIGHT (POUNDS)
6	70 – 100 50 – 70 35 – 50 2 – 10	12 9 6 2	85 35 10 0.4
9	70 – 100 50 – 70 35 – 50 2 – 10	15 12 9 3	160 85 35 1.3
12	70 – 100 50 – 70 35 – 50 2 – 10	21 18 12 4	440 275 85 3
18	100 50 – 70 35 – 50 2 – 10	30 24 18 6	1280 650 275 10
24	100 50 – 70 35 – 50 2 – 10	42 33 24 9	3500 1700 650 35

TABLE 2. RIPRAP BEDDING

SIEVE SIZE	MASS PERCENT PASSING SQUARE MESH SIEVES
	CLASS A
3"	100
1 1/2"	20 – 90
NO. 4	0 – 20
NO. 200	0 – 3

MATCHES SPECIFICATIONS FOR CDOT CLASS A FILTER MATERIAL AND UDFCD TYPE 1 BEDDING. ALL ROCK SHALL BE FRACTURED FACE, ALL SIDES.

TABLE 3. 1 1/2" CRUSHED ROCK

SIEVE SIZE	MASS PERCENT PASSING SQUARE MESH SIEVES
	NO. 4
2"	100
1 1/2"	90 – 100
1"	20 – 55
3/4"	0 – 15
3/8"	0 – 5

MATCHES SPECIFICATIONS FOR NO. 4 COARSE AGGREGATE FOR CONCRETE PER AASHTO M43. ALL ROCK SHALL BE FRACTURED FACE, ALL SIDES.

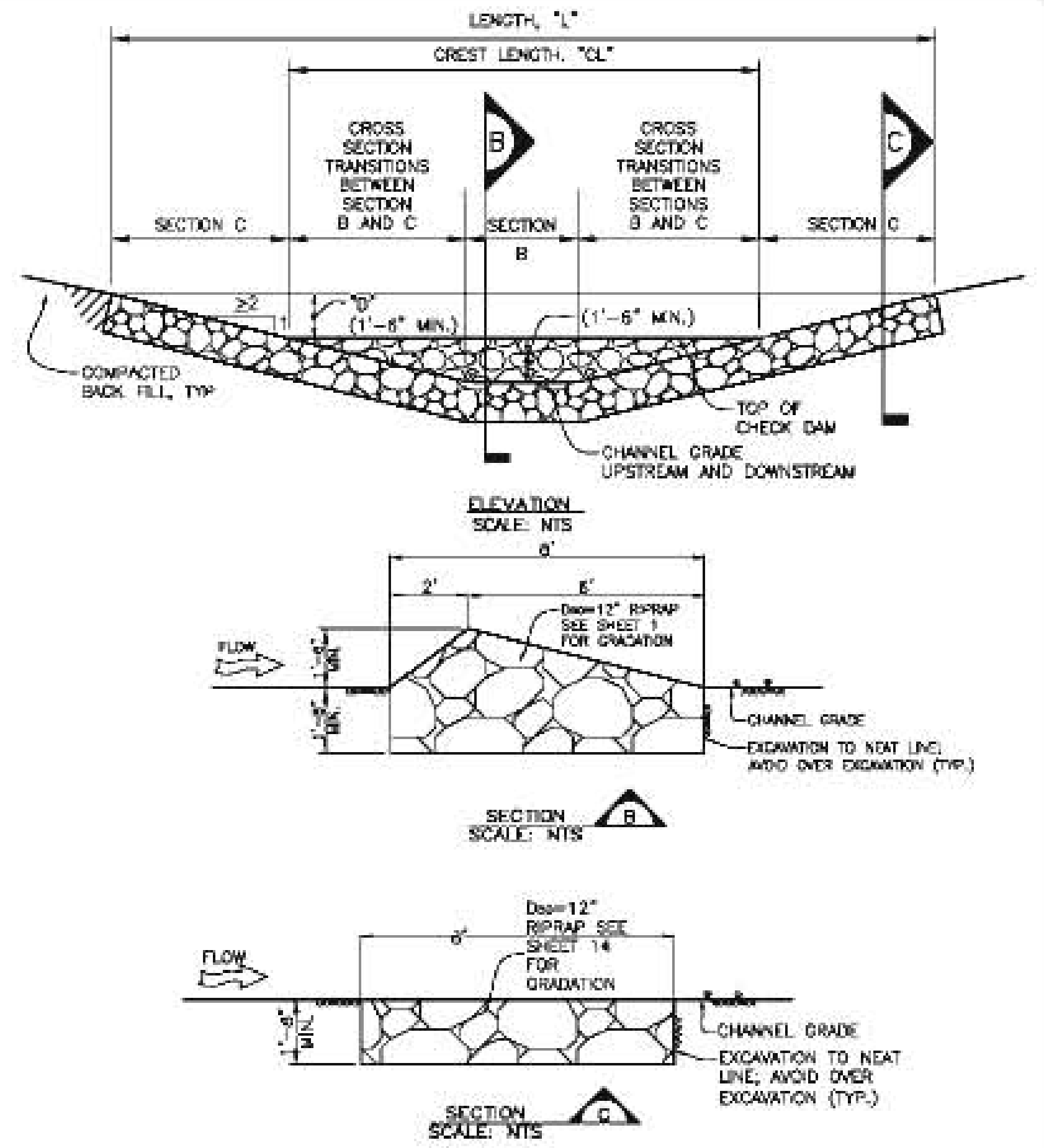
LENGTH, "L"
CREST LENGTH, "CL"
CROSS SECTION TRANSITIONS BETWEEN SECTION B AND C
SECTION C
SECTION B
B
C
≥2
1
"D" (1'-6" MIN.)
(1'-6" MIN.)
COMPACTED BACK FILL, TYP
TOP OF CHECK DAM
CHANNEL GRADE UPSTREAM AND DOWNSTREAM
ELEVATION SCALE: NTS
8'
2'
6'
D50=12" RIPRAP SEE SHEET 1 FOR GRADATION
FLOW
1'-6" MIN.
CHANNEL GRADE
EXCAVATION TO NEAT LINE, AVOID OVER EXCAVATION (TYP.)
SECTION B SCALE: NTS
D50=12" RIPRAP SEE SHEET 14 FOR GRADATION
EXCAVATION TO NEAT LINE; AVOID OVER EXCAVATION (TYP.)
SECTION C SCALE: NTS

CHECK DAM INSTALLATION NOTES

1. SEE PLAN VIEW FOR:
   - 1.1. LOCATIONS OF CHECK DAMS.
   - 1.2. CHECK DAM TYPE (CHECK DAM OR REINFORCED CHECK DAM).
   - 1.3. LENGTH, "L", CREST LENGTH, "CL", AND DEPTH, "D".
2. CHECK DAMS INDICATED ON INITIAL GESC PLAN SHALL BE INSTALLED AFTER CONSTRUCTION FENCE, BUT PRIOR TO ANY UPSTREAM LAND-DISTURBING ACTIVITIES.
3. RIPRAP UTILIZED FOR CHECK DAMS SHALL HAVE A D_{50} MEDIAN STONE SIZE OF 12".
4. RIPRAP PAD SHALL BE TRENCHED INTO THE GROUND A MINIMUM OF 1'-8".
5. THE ENDS OF THE CHECK DAM SHALL BE A MINIMUM OF 1'-6" HIGHER THAN THE CENTER OF THE CHECK DAM.

CHECK DAM MAINTENANCE NOTES

1. THE GESC MANAGER SHALL INSPECT CHECK DAMS WEEKLY, DURING AND AFTER ANY STORM EVENT AND MAKE REPAIRS OR CLEAN OUT AS NECESSARY.
2. SEDIMENT ACCUMULATED UPSTREAM OF CHECK DAMS SHALL BE REMOVED WHEN THE SEDIMENT DEPTH UPSTREAM OF CHECK DAM IS WITHIN ½ OF THE HEIGHT OF THE CREST.
3. CHECK DAMS ARE TO REMAIN IN PLACE UNTIL THE UPSTREAM DISTURBED AREA IS STABILIZED AND GRASS COVER IS APPROVED BY SEMSWA.
4. WHEN CHECK DAMS ARE REMOVED, EXCAVATIONS SHALL BE FILLED WITH SUITABLE COMPACTED BACK FILL. ANY DISTURBED AREA SHALL BE SEEDED AND MULCHED AND COVERED WITH EROSION CONTROL BLANKET OR OTHERWISE STABILIZED IN A MANNER APPROVED BY SEMSWA.

▨ (CD) CHECK DAM (1)

NOTE: NO CONCENTRATED FLOWS

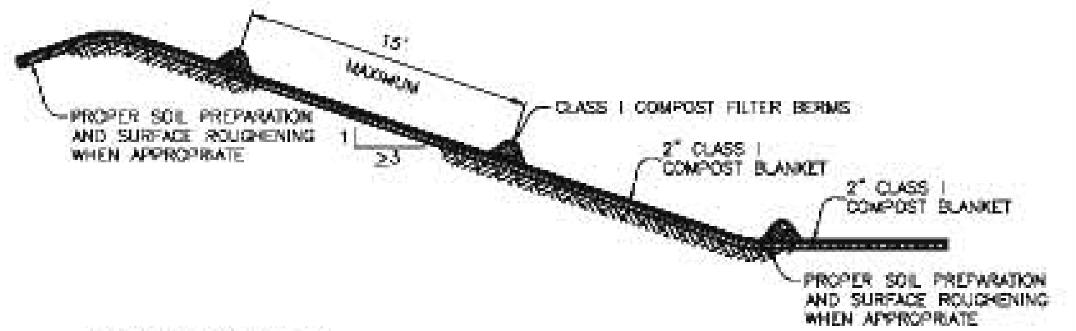
15' MAXIMUM
CLASS I COMPOST FILTER BERMS
PROPER SOIL PREPARATION AND SURFACE ROUGHENING WHEN APPROPRIATE
1
≥3
2" CLASS I COMPOST BLANKET
2" CLASS I COMPOST BLANKET
PROPER SOIL PREPARATION AND SURFACE ROUGHENING WHEN APPROPRIATE

COMPOST BLANKET NOTES:

1. SEE PLAN VIEW FOR AREA OF COMPOST BLANKET.
2. MAY BE USED IN PLACE OF STRAW MULCH OR EROSION CONTROL BLANKET IN AREAS WHERE ACCESS IS DIFFICULT DUE TO LANDSCAPING OR OTHER OBJECTS OR IN AREAS WHERE A SMOOTH TURF GRASS FINISH IS DESIRED.
3. SHALL ONLY BE UTILIZED IN AREAS WHERE SHEET FLOW CONDITIONS PREVAIL; SHALL BE PROHIBITED IN AREAS OF POSSIBLE CONCENTRATED FLOW.
4. SOIL PREPARATION SHALL BE COMPLETE PER THE SPECIFICATIONS OUTLINED IN THESE CRITERIA PRIOR TO APPLICATION.
5. WHEN TURF GRASS FINISH IS NOT DESIRED, SURFACE ROUGHENING ON SLOPES SHALL TAKE PLACE PRIOR TO APPLICATION.
6. SHALL BE EVENLY APPLIED AT A DEPTH OF 2 INCH.
7. MAY BE APPLIED UTILIZING PNEUMATIC BLOWER, OR BY HAND.
8. SEEDING SHALL BE DRILLED PRIOR TO THE APPLICATION OF COMPOST OR SEED MAY BE COMBINED AND BLOWN WITH THE PNEUMATIC BLOWER.
9. COMPOST FILTER BERM SHALL BE UTILIZED ON SLOPES WITH A MAXIMUM SPACING OF 15 FEET PER THE REQUIREMENTS FOUND IN THE COMPOST FILTER BERM SECTION.
10. THE GESC MANAGER SHALL INSPECT WEEKLY, DURING AND AFTER ANY STORM EVENT.
11. COMPOST USED IN THE APPLICATION OF THE COMPOST BLANKET SHALL BE A CLASS I, COMPOST AS DEFINED BY THE FOLLOWING PHYSICAL, CHEMICAL, AND BIOLOGICAL PARAMETERS:

PARAMETERS	CLASS I COMPOST FOR COMPOST BLANKET
MINIMUM STABILITY INDICATOR	STABLE TO VERY STABLE
SOLUBLE SALTS	MAXIMUM 5mmhos/cm
PH	6.0 – 8.0
AG INDEX	> 10
MATURITY INDICATOR EXPRESSED AS PERCENTAGE OF GERMINATION/VIGOR	80+/80+
MATURITY INDICATOR EXPRESSED AS AMMONIA N/ NITRATE N RATIO	< 4
MATURITY INDICATOR EXPRESSED AS CARBON TO NITROGEN RATIO	20:1
TESTED FOR CLOPYRALID	YES/NEGATIVE RESULT
MOISTURE CONTENT	30–60 %
ORGANIC MATTER CONTENT	25–45 % OF DRY WEIGHT
PARTICLE SIZE DISTRIBUTION	3" (75mm) 100% PASSING 1" (25mm) 95% TO 100% PASSING 3/4" (19mm) 85% TO 90% PASSING 3/8" (9.5mm) 50% TO 60% PASSING #4 20 TO 35% PASSING
PRIMARY, SECONDARY NUTRIENTS; TRACE ELEMENT	MUST BE REPORTED
TESTING AND TEST REPORT SUBMITTAL REQUIREMENTS	STA + CLOPYRALID
ORGANIC MATTER PER CUBIC YARD	MUST REPORT
CHEMICAL CONTAMINANTS	MEET OR EXCEED US EPA CLASS A STANDARD, 40 CFR 503.1 TABLES 1 & 3 LEVELS
MINIMUM MANUFACTURING/PRODUCTION REQUIREMENT	FULLY PERMITTED UNDER COLORADO DEPARTMENT OF PUBLIC HEALTH AND ENVIRONMENT, HAZARDOUS MATERIALS AND WASTE MANAGEMENT DIVISION
RISK FACTOR RELATING TO PLANT GERMINATION AND HEALTH	LOW

NOTE: CLOPYRALID IS THE COMMON NAME OF A HERBICIDE THAT KILLS BROAD-LEAVED WEEDS SUCH AS DANDELIONS, CLOVER AND THISTLE.

▨ (CB) COMPOST BLANKET (2)

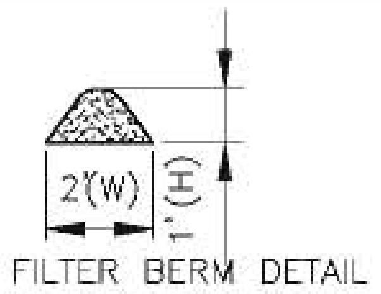

COMPOST FILTER BERM DETAIL

COMPOST FILTER BERM NOTES:

1. SEE PLAN VIEW FOR LENGTH OF COMPOST FILTER BERM.
2. SHALL BE APPLIED TO ALL SLOPES RECEIVING A COMPOST BLANKET AT 15' INCREMENTS.
3. FILTER BERMS SHALL RUN PARALLEL TO THE CONTOUR.
4. FILTER BERMS SHALL BE A MINIMUM OF 1' H x 2' W.
5. FILTER BERMS SHALL BE APPLIED UTILIZING PNEUMATIC BLOWER, OR BY HAND.
6. SHALL ONLY BE UTILIZED IN AREAS WHERE SHEET FLOW CONDITIONS PREVAIL; SHALL BE PROHIBITED IN AREAS OF POSSIBLE CONCENTRATED FLOW.
7. SOIL PREPARATION SHALL BE COMPLETE PER THE SPECIFICATIONS OUTLINED IN THESE CRITERIA PRIOR TO APPLICATION.
8. WHEN TURF GRASS FINISH IS NOT DESIRED, SURFACE ROUGHENING ON SLOPES SHALL TAKE PLACE PRIOR TO APPLICATION.
9. SEEDING SHALL BE DRILLED BEFORE THE APPLICATION OF COMPOST OR SEED MAY BE COMBINED AND BLOWN WITH THE PNEUMATIC BLOWER.
10. THE GESC MANAGER SHALL INSPECT WEEKLY, DURING AND AFTER ANY STORM EVENT.
11. COMPOST USED IN THE APPLICATION OF THE COMPOST BLANKET SHALL BE A CLASS I COMPOST AS DEFINED BY THE FOLLOWING PHYSICAL, CHEMICAL, AND BIOLOGICAL PARAMETERS:

PARAMETERS	CLASS I COMPOST FOR COMPOST FILTER BERM
MINIMUM STABILITY INDICATOR	STABLE TO VERY STABLE
SOLUBLE SALTS	MAXIMUM 5mmhos/cm
PH	6.0 – 8.0
AG INDEX	> 10
MATURITY INDICATOR EXPRESSED AS PERCENTAGE OF GERMINATION/VIGOR	80+/80+
MATURITY INDICATOR EXPRESSED AS AMMONIA N/ NITRATE N RATIO	< 4
MATURITY INDICATOR EXPRESSED AS CARBON TO NITROGEN RATIO	20:1
TESTED FOR CLOPYRALID	YES/NEGATIVE RESULT
MOISTURE CONTENT	30–60 %
ORGANIC MATTER CONTENT	25–45 % OF DRY WEIGHT
PARTICLE SIZE DISTRIBUTION	3" (75mm) 100% PASSING 1" (25mm) 95% TO 100% PASSING 3/4" (19mm) 85% TO 90% PASSING 3/8" (9.5mm) 50% TO 60% PASSING #4 20 TO 35% PASSING
PRIMARY, SECONDARY NUTRIENTS; TRACE ELEMENT	MUST BE REPORTED
TESTING AND TEST REPORT SUBMITTAL REQUIREMENTS	STA + CLOPYRALID
ORGANIC MATTER PER CUBIC YARD	MUST REPORT
CHEMICAL CONTAMINANTS	MEET OR EXCEED US EPA CLASS A STANDARD, 40 CFR 503.1 TABLES 1 & 3 LEVELS
MINIMUM MANUFACTURING/PRODUCTION REQUIREMENT	FULLY PERMITTED UNDER COLORADO DEPARTMENT OF PUBLIC HEALTH AND ENVIRONMENT, HAZARDOUS MATERIALS AND WASTE MANAGEMENT DIVISION
RISK FACTOR RELATING TO PLANT GERMINATION AND HEALTH	LOW

NOTE: IF A BIOSOLID COMPOST IS TO BE UTILIZED IT SHALL BE PRODUCED BY A FACILITY IN POSSESSION OF A VALID NOTICE OF AUTHORIZATION (NOA) FOR THE UNRESTRICTED USE AND DISTRIBUTION BY THE COLORADO DEPARTMENT OF PUBLIC HEALTH AND ENVIRONMENT. THE NOA SHALL BE PROVIDED UPON REQUEST TO SEMSWA.

NOTE: A LAB TEST DETAILING THE CHEMICAL, PHYSICAL, AND BIOLOGICAL PARAMETERS SHALL BE PROVIDED UPON REQUEST BY SEMSWA.

▲ (CFB) COMPOST FILTER BERM (3)

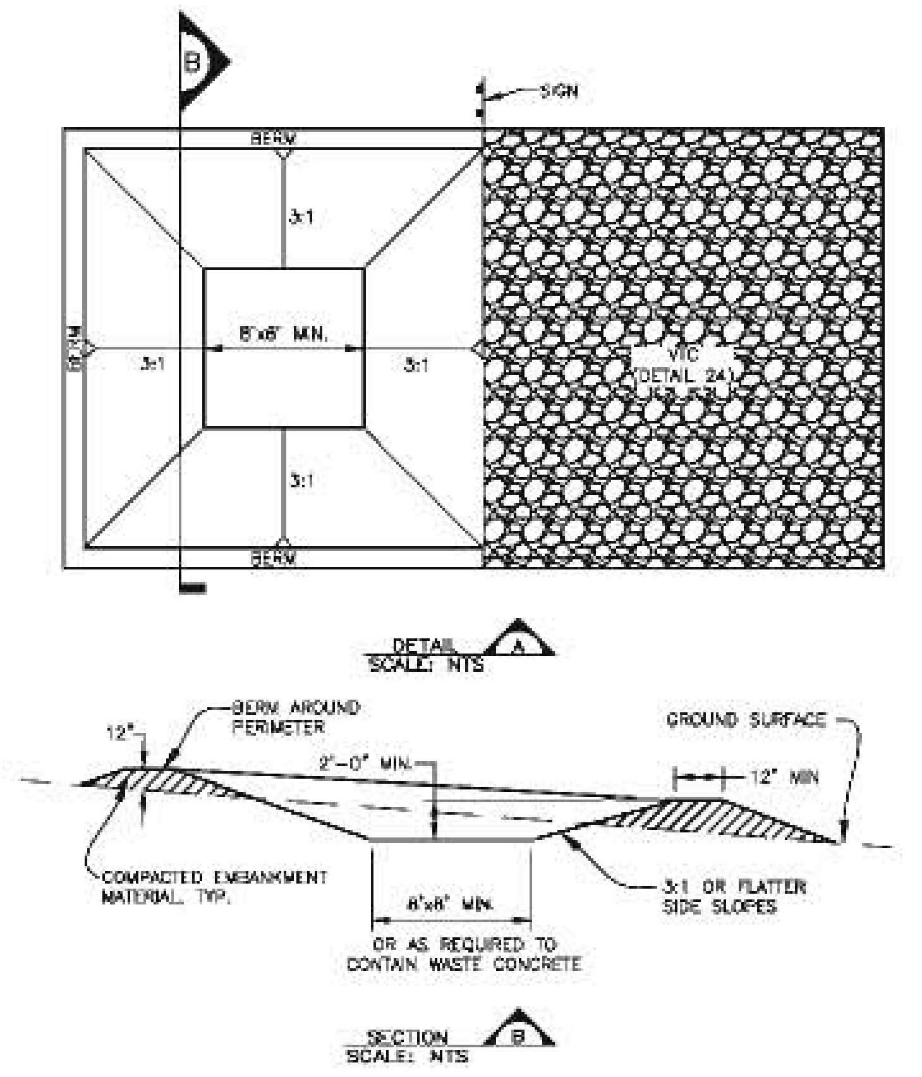

CONCRETE WASHOUT AREA INSTALLATION NOTES

1. SEE PLAN VIEW FOR LOCATIONS OF CONCRETE WASHOUT AREA.
2. THE CONCRETE WASHOUT AREA SHALL BE INSTALLED PRIOR TO ANY CONCRETE PLACEMENT ON SITE.
3. VEHICLE TRACKING CONTROL (DETAIL 24) IS REQUIRED AT THE ACCESS POINT.
4. SIGNS SHALL BE PLACED AT THE CONSTRUCTION ENTRANCE, AT THE WASHOUT AREA, AND ELSEWHERE AS NECESSARY TO CLEARLY INDICATE THE LOCATION OF THE CONCRETE WASHOUT AREA TO OPERATORS OF CONCRETE TRUCKS AND PUMP RIGS.
5. EXCAVATED MATERIAL SHALL BE UTILIZED IN PERIMETER BERM CONSTRUCTION.

CONCRETE WASHOUT AREA MAINTENANCE NOTES

1. THE CONCRETE WASHOUT AREA SHALL BE REPAIRED AND ENLARGED OR CLEANED OUT AS NECESSARY TO MAINTAIN CAPACITY FOR WASTED CONCRETE.
2. AT THE END OF CONSTRUCTION, ALL CONCRETE SHALL BE REMOVED FROM THE SITE AND DISPOSED OF AT AN APPROVED WASTE SITE.
3. WHEN THE CONCRETE WASHOUT AREA IS REMOVED, THE DISTURBED AREA SHALL BE DRILL SEEDED AND CRIMP MULCHED OR OTHERWISE STABILIZED IN A MANNER APPROVED BY SEMSWA.
4. INSPECT WEEKLY, DURING AND AFTER ANY STORM EVENT.

☐ (CWA) CONCRETE WASHOUT AREA (4)

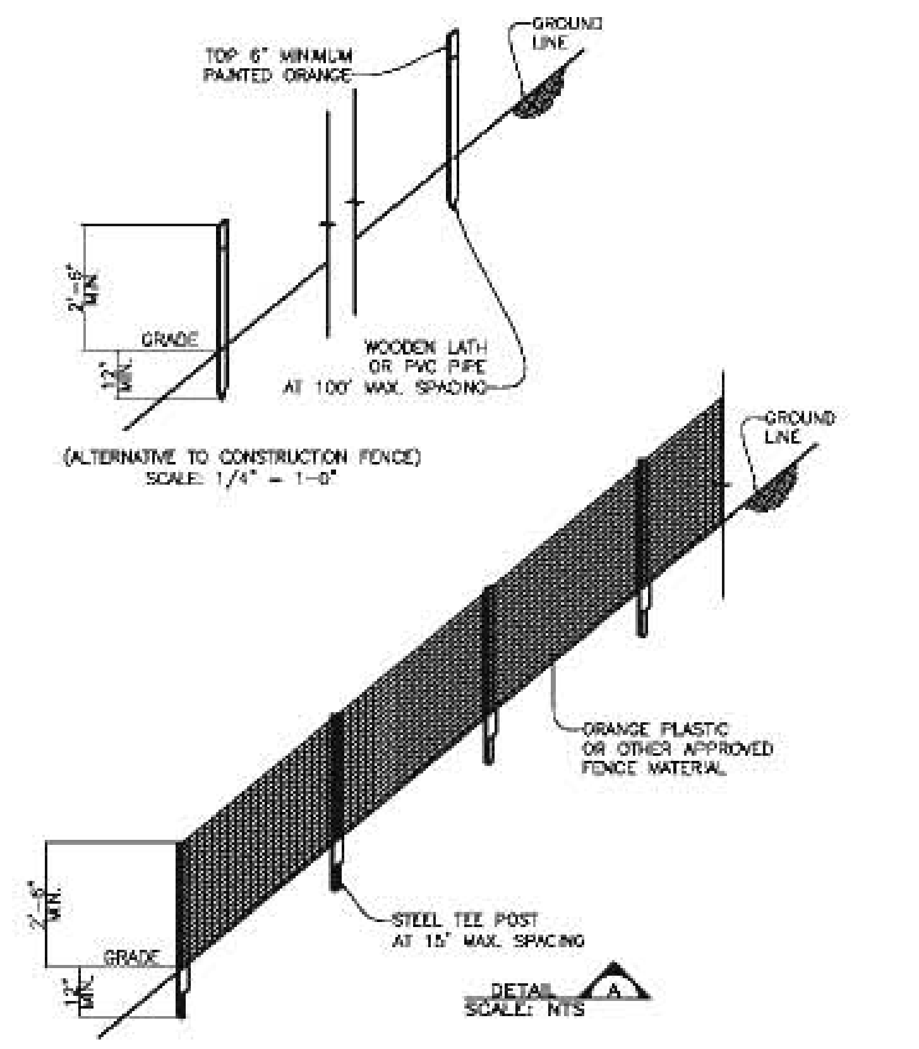
TOP 6" MINIMUM PAINTED ORANGE
GROUND LINE
2'-6" MIN.
GRADE
12" MIN.
WOODEN LATH OR PVC PIPE AT 100' MAX. SPACING
(ALTERNATIVE TO CONSTRUCTION FENCE) SCALE: 1/4" = 1'-0"
GROUND LINE
ORANGE PLASTIC OR OTHER APPROVED FENCE MATERIAL
2'-6" MIN.
GRADE
12" MIN.
STEEL TEE POST AT 15' MAX. SPACING
DETAIL A SCALE: NTS

CONSTRUCTION FENCE INSTALLATION NOTES

1. SEE PLAN VIEW FOR:
   - TYPE OF CONSTRUCTION LIMIT INDICATOR (FENCE OR MARKERS).
   - LOCATION AND LENGTH OF FENCE OR LINE OF MARKERS.
2. CONSTRUCTION FENCE OR MARKERS INDICATED ON INITIAL GESC PLAN SHALL BE INSTALLED PRIOR TO OTHER BMPS AND ANY LAND-DISTURBING ACTIVITIES.
3. STEEL TEE POSTS SHALL BE UTILIZED FOR SUPPORT OF CONSTRUCTION FENCE. MAXIMUM SPACING FOR TEE POSTS SHALL BE 15'.

CONSTRUCTION FENCE MAINTENANCE NOTES

1. ANY DAMAGED FENCE OR MARKERS SHALL BE REPAIRED ON A DAILY BASIS.
2. FENCE OR MARKERS SHALL BE REMOVED AT THE END OF CONSTRUCTION. IF ANY DISTURBED AREA EXISTS AFTER FENCE REMOVAL, IT SHALL BE DRILL SEEDED AND CRIMP MULCHED OR OTHERWISE STABILIZED IN A MANNER APPROVED BY SEMSWA.

—□—□— (CF) CONSTRUCTION FENCE (5)

□ □ (CM) CONSTRUCTION MARKERS (6)

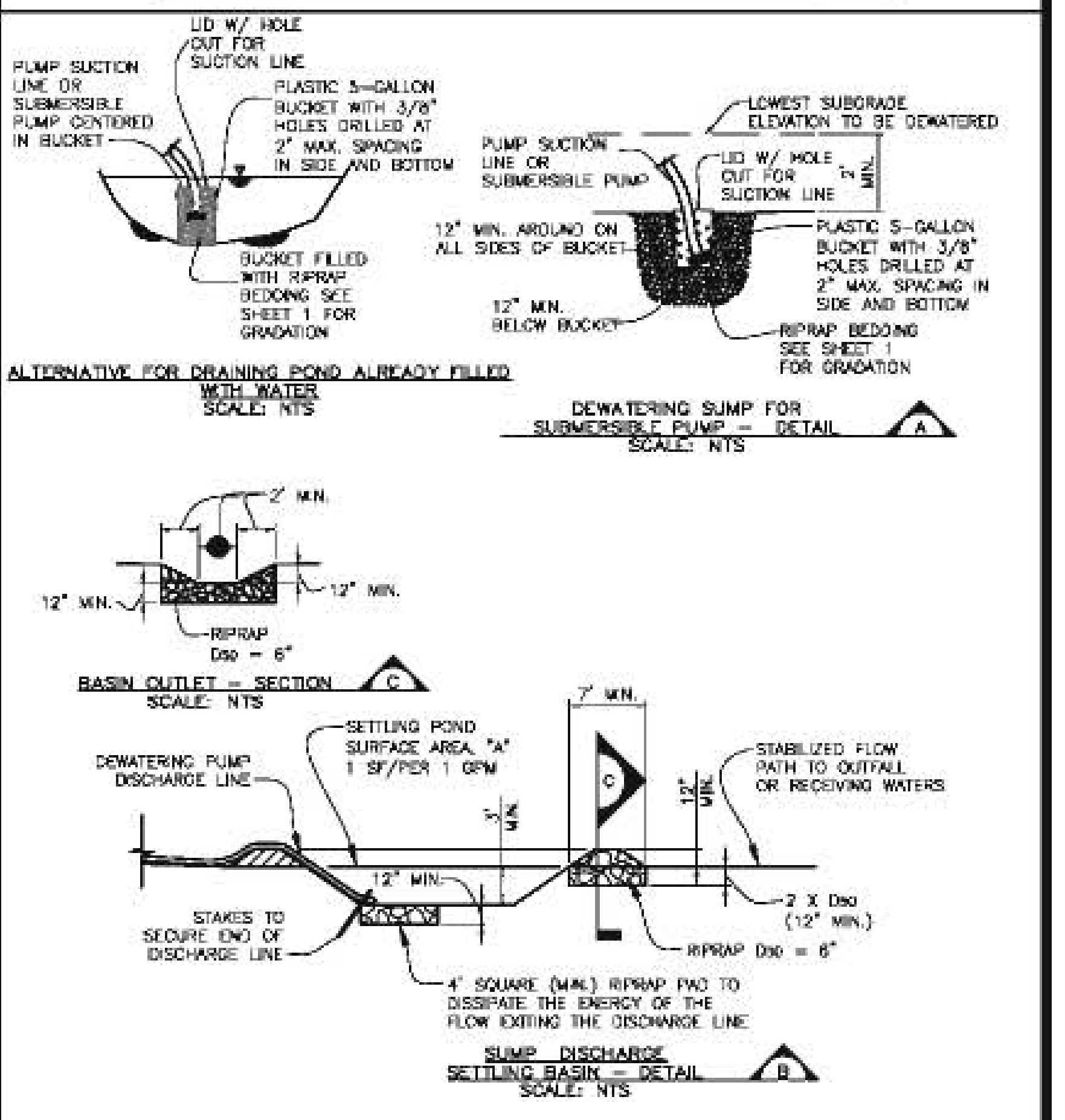
PUMP SUCTION LINE OR SUBMERSIBLE PUMP CENTERED IN BUCKET
LID W/ HOLE CUT FOR SUCTION LINE
PLASTIC 5-GALLON BUCKET WITH 3/8" HOLES DRILLED AT 2" MAX. SPACING IN SIDE AND BOTTOM
BUCKET FILLED WITH RIPRAP BEDDING SEE SHEET 1 FOR GRADATION
ALTERNATIVE FOR DRAINING POND ALREADY FILLED WITH WATER SCALE: NTS
LOWEST SUBGRADE ELEVATION TO BE DEWATERED
PUMP SUCTION LINE OR SUBMERSIBLE PUMP
LID W/ HOLE CUT FOR SUCTION LINE
12" MIN.
PLASTIC 5-GALLON BUCKET WITH 3/8" HOLES DRILLED AT 2" MAX. SPACING IN SIDE AND BOTTOM
12" MIN. BELOW BUCKET
RIPRAP BEDDING SEE SHEET 1 FOR GRADATION
DEWATERING SUMP FOR SUBMERSIBLE PUMP – DETAIL A SCALE: NTS
2" MIN.
12" MIN.
12" MIN.
RIPRAP D50 = 6"
BASIN OUTLET – SECTION C SCALE: NTS
DEWATERING PUMP DISCHARGE LINE
SETTLING POND SURFACE AREA, "A" 1 SF/PER 1 GPM
2' MIN.
STABILIZED FLOW PATH TO OUTFALL OR RECEIVING WATERS
12" MIN.
2 X D50 (12" MIN.)
RIPRAP D50 = 6"
STAKES TO SECURE END OF DISCHARGE LINE
4' SQUARE (MIN.) RIPRAP PAD TO DISSIPATE THE ENERGY OF THE FLOW EXITING THE DISCHARGE LINE
SUMP DISCHARGE SETTLING BASIN – DETAIL B SCALE: NTS

DEWATERING INSTALLATION NOTES

1. THE GESC MANAGER SHALL OBTAIN A CONSTRUCTION DISCHARGE (DEWATERING) PERMIT FROM THE COLORADO DEPARTMENT OF PUBLIC HEALTH AND ENVIRONMENT PRIOR TO ANY DEWATERING OPERATIONS. ALL DEWATERING SHALL BE IN ACCORDANCE WITH THE REQUIREMENTS OF THE DISCHARGE PERMIT AND SHALL BE COORDINATED WITH THE SEMSWA GESC INSPECTOR.
2. THE GESC MANAGER SHALL PROVIDE, OPERATE, AND MAINTAIN DEWATERING SYSTEMS OF SUFFICIENT SIZE AND CAPACITY TO PERMIT EXCAVATION AND SUBSEQUENT CONSTRUCTION IN DRY CONDITIONS AND TO LOWER AND MAINTAIN THE GROUNDWATER LEVEL A MINIMUM OF 2-FEET BELOW THE LOWEST POINT OF EXCAVATION AND CONTINUOUSLY MAINTAIN EXCAVATIONS FREE OF WATER UNTIL BACKFILLED TO FINAL GRADE.
3. DEWATERING OPERATIONS SHALL USE ONE OR MORE OF THE DEWATERING SUMPS SHOWN ABOVE OR OTHER MEANS APPROVED BY SEMSWA TO REDUCE THE PUMPING OF SEDIMENT, AND SHALL PROVIDE A TEMPORARY BASIN FOR SETTLING PUMPED DISCHARGES PRIOR TO RELEASE OFF SITE OR TO A RECEIVING WATER. SEDIMENT BASIN PER DETAIL 14 MAY BE USED IN LIEU OF SUMP DISCHARGE SETTLING BASIN SHOWN ABOVE.
4. A 4' SQUARE RIPRAP PAD SHALL BE PLACED AT DISCHARGE POINT.
5. THE DISCHARGE END OF THE LINE SHALL BE STAKED IN PLACES TO PREVENT MOVEMENT OF RIPRAP PAD.

DEWATERING MAINTENANCE NOTES

1. THE GESC MANAGER SHALL INSPECT DEWATERING SYSTEMS AND PERFORM ANY NECESSARY REPAIRS OR MAINTENANCE ON A HOURLY BASIS.
2. TEMPORARY SETTLING BASINS SHALL BE REMOVED WHEN NO LONGER NEEDED FOR DEWATERING OPERATIONS. ANY DISTURBED AREA SHALL BE DRILL SEEDED AND CRIMP MULCHED OR OTHERWISE STABILIZED IN A MANNER APPROVED BY SEMSWA.

(DW) DEWATERING (7)

UTILITY NOTIFICATION CENTER OF COLORADO
CALL BEFORE YOU DIG
811
Call 2 days prior to any digging, grading or excavating for the marking of underground member utilities

SOUTHEAST METRO STORMWATER AUTHORITY
76 INVERNESS DRIVE EAST
CENTENNIAL COLORADO
80112-5106
(303) 858-8844 - INSPECTION DIVISION
(303) 267-9552

GRADING EROSION AND SEDIMENT CONTROL STANDARD NOTES AND DETAILS

GESC SHEET 1 OF 4

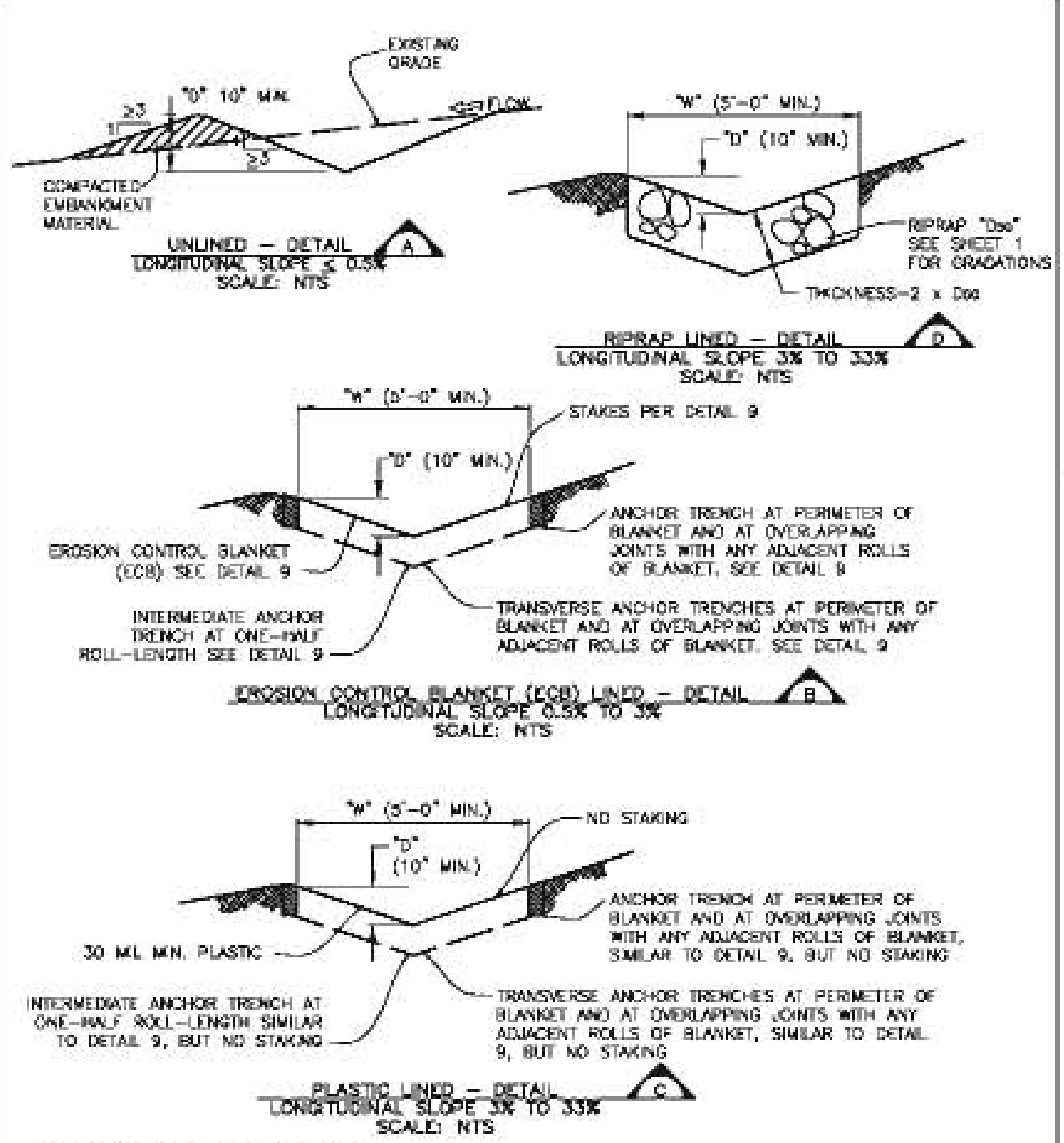
UNLINED – DETAIL
LONGITUDINAL SLOPE ≤ 0.5%
SCALE: NTS
RIPRAP LINED – DETAIL
LONGITUDINAL SLOPE 3% TO 33%
SCALE: NTS
EROSION CONTROL BLANKET (ECB) LINED – DETAIL
LONGITUDINAL SLOPE 0.5% TO 3%
SCALE: NTS
30 MIL MIN. PLASTIC
INTERMEDIATE ANCHOR TRENCH AT ONE-HALF ROLL-LENGTH SIMILAR TO DETAIL 9, BUT NO STAKING
TRANSVERSE ANCHOR TRENCHES AT PERIMETER OF BLANKET AND AT OVERLAPPING JOINTS WITH ANY ADJACENT ROLLS OF BLANKET, SIMILAR TO DETAIL 9, BUT NO STAKING
PLASTIC LINED – DETAIL
LONGITUDINAL SLOPE 3% TO 33%
SCALE: NTS

DIVERSION DITCH INSTALLATION NOTES

1. SEE PLAN VIEW FOR:
   - LOCATION OF DIVERSION DITCH.
   - TYPE OF DITCH (UNLINED, ECB LINED, PLASTIC LINED OR RIPRAP LINED).
   - LENGTH OF EACH TYPE OF DITCH.
   - DEPTH, "D", AND WIDTH, "W" DIMENSIONS.
   - FOR ECB LINED DITCH, EROSION CONTROL BLANKET TYPE (SEE DETAIL 9).
   - FOR RIPRAP LINED DITCH, SIZE OF RIPRAP, "D50".
2. SEE DRAINAGE PLANS FOR DETAILS OF ANY PERMANENT CONVEYANCE FACILITIES OR DIVERSION DITCHES EXCEEDING A 2-YEAR FLOW RATE OF 10 CFS.
3. DIVERSION DITCHES INDICATED ON INITIAL GESC PLAN SHALL BE INSTALLED PRIOR TO ANY LAND-DISTURBING ACTIVITIES.
4. FOR ECB LINED DITCHES, INSTALLATION OF EROSION CONTROL BLANKET SHALL CONFORM TO THE REQUIREMENTS OF DETAIL 9.
5. IN LOCATIONS WHERE CONSTRUCTION TRAFFIC MUST CROSS A DIVERSION DITCH, THE PERMITTEES SHALL INSTALL A TEMPORARY CULVERT WITH A MINIMUM DIAMETER OF 12-INCHES.

DIVERSION DITCH MAINTENANCE NOTES

1. THE GESC MANAGER SHALL INSPECT DIVERSION DITCHES WEEKLY, DURING AND AFTER ANY STORM EVENT AND MAKE REPAIRS OR CLEAN OUT AS NECESSARY.
2. DIVERSION DITCHES ARE TO REMAIN IN PLACE UNTIL THE END OF CONSTRUCTION, OR, IF APPROVED BY SEMSWA, LEFT IN PLACE.
3. IF DIVERSION DITCHES ARE REMOVED, THE DISTURBED AREA SHALL BE DRILL SEEDED AND CRIMP MULCHED OR OTHERWISE STABILIZED IN A MANNER APPROVED BY SEMSWA.

DD DIVERSION DITCH 8

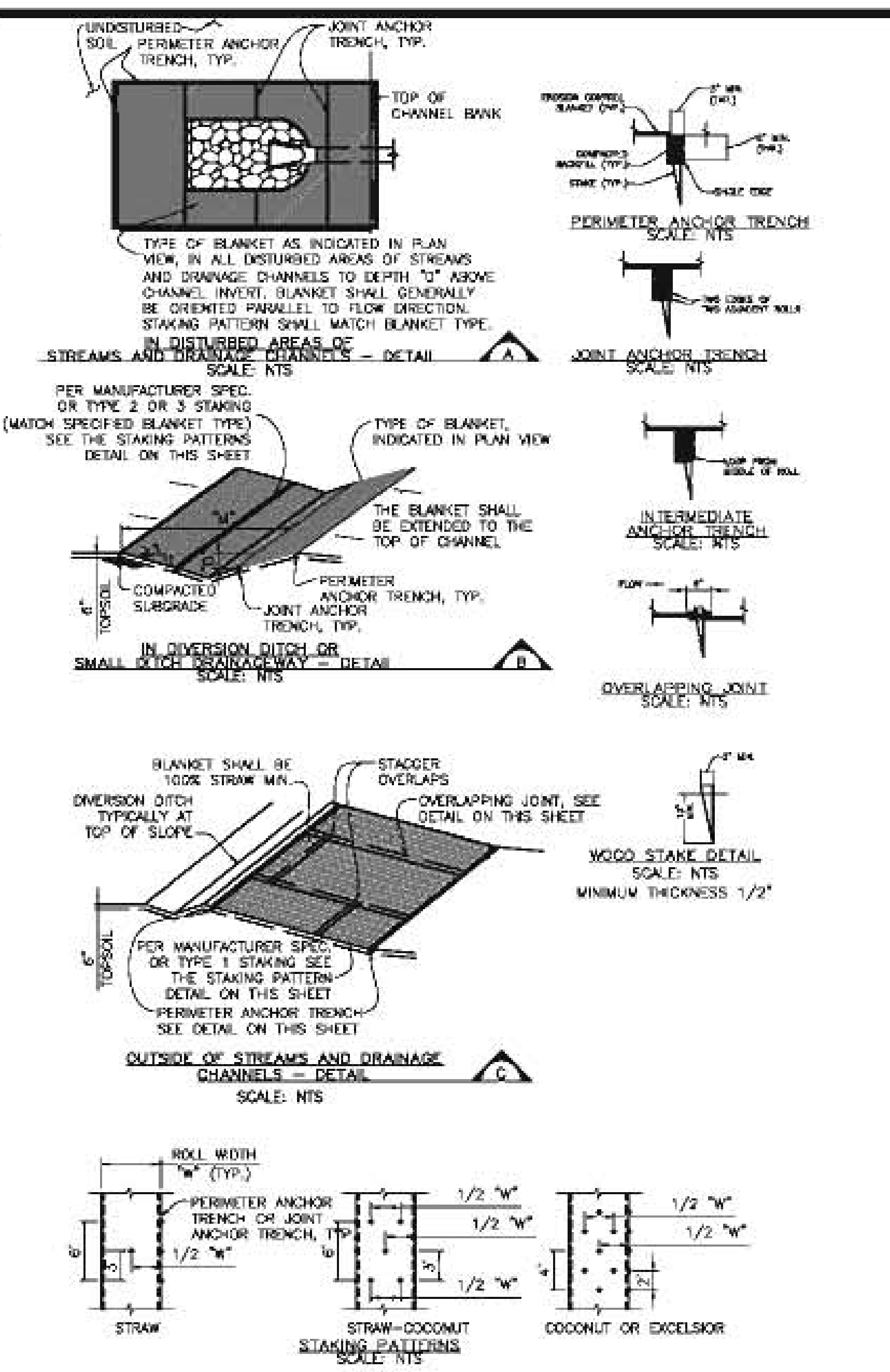
STREAMS AND DRAINAGE CHANNELS – DETAIL
PERIMETER ANCHOR TRENCH
JOINT ANCHOR TRENCH
SMALL DITCH DRAINAGEWAY – DETAIL
INTERMEDIATE ANCHOR TRENCH
OVERLAPPING JOINT
WOOD STAKE DETAIL
OUTSIDE OF STREAMS AND DRAINAGE CHANNELS – DETAIL
STAKING PATTERNS
STRAW
STRAW–COCONUT
COCONUT OR EXCELSIOR

SHALL BE IN ACCORDANCE WITH MANUFACTURER'S SPECIFICATION. IF NO MANUFACTURER'S SPECIFICATION IS AVAILABLE USE THE ACCEPTABLE STAKING PATTERN (AS SHOWN ABOVE).

▨ ECB EROSION CONTROL 9
BLANKET SHEET 1

EROSION CONTROL BLANKET INSTALLATION NOTES

1. SEE PLAN VIEW FOR:
   - LOCATION OF PERIMETER OF EROSION CONTROL BLANKET.
   - TYPE OF BLANKET (STRAW, STRAW-COCONUT, COCONUT, OR EXCELSIOR).
   - AREA "A" IN SQUARE YARDS OF EACH TYPE OF BLANKET.
2. ALL EROSION CONTROL BLANKETS AND NETTING SHALL BE MADE OF 100% NATURAL AND BIODEGRADABLE MATERIAL; NO PLASTIC OR OTHER SYNTHETIC MATERIAL, EVEN IF PHOTO DEGRADABLE, SHALL BE ALLOWED.
3. ALL EROSION CONTROL BLANKETS AND NETTING SHALL BE MADE OF 100% NATURAL AND BIODEGRADABLE MATERIAL; NO PLASTIC OR OTHER SYNTHETIC MATERIAL, EVEN IF PHOTO DEGRADABLE, SHALL BE ALLOWED.
4. IN AREAS WHERE EROSION CONTROL BLANKET IS SHOWN ON THE PLANS, THE PERMITTEE SHALL PLACE TOPSOIL AND PERFORM FINAL GRADING, SURFACE PREPARATION, AND SEEDING BELOW THE BLANKET IN ACCORDANCE WITH THE REQUIREMENTS OF DETAIL 17, SEEDING AND MULCHING. SUBGRADE SHALL BE SMOOTH AND MOIST PRIOR TO BLANKET INSTALLATION AND THE BLANKET SHALL BE IN FULL CONTACT WITH SUBGRADE. NO GAPS OR VOIDS SHALL EXIST UNDER THE BLANKET.
5. PERIMETER ANCHOR TRENCH SHALL BE USED AT OUTSIDE PERIMETER OF ALL BLANKET AREAS.
6. JOINT ANCHOR TRENCH SHALL BE USED TO JOIN ROLLS OF BLANKETS TOGETHER (LONGITUDINALLY AND TRANSVERSELY) FOR ALL BLANKETS EXCEPT STRAW, WHICH MAY USE AN OVERLAPPING JOINT.
7. INTERMEDIATE ANCHOR TRENCH SHALL BE USED AT SPACING OF ONE-HALF THE ROLL LENGTH FOR COCONUT AND EXCELSIOR BLANKETS.
8. THE OVERLAPPING JOINT DETAIL SHALL BE USED TO JOIN ROLLS OF BLANKETS TOGETHER FOR BLANKETS ON SLOPES.
9. MATERIAL SPECIFICATIONS OF EROSION CONTROL BLANKET SHALL CONFORM TO TABLE 7.1.
10. ANY AREAS OF SEEDING AND MULCHING DISTURBED IN THE PROCESS OF INSTALLING EROSION CONTROL BLANKET SHALL BE RESEEDED AND MULCHED IN ACCORDANCE WITH DETAIL 17.
11. SEE DRAINAGE DESIGN PLANS FOR MAJOR DRAINAGEWAY STABILIZATION MEASURES THAT MAY EXCEED THE DESIGN CONDITIONS ASSOCIATED WITH THE DETAILS ABOVE.

TABLE 7.1 – EROSION CONTROL BLANKET TYPE

TYPE	COCONUT CONTENT	STRAW CONTENT	EXCELSIOR CONTENT	NETTING MIN.
STRAW*	–	100%	–	DOUBLE/NATURAL
STRAW–COCONUT	30% MIN.	70% MAX.	–	DOUBLE/NATURAL
COCONUT	100%	–	–	DOUBLE/NATURAL
EXCELSIOR	–	–	100%	DOUBLE/NATURAL

* FOR OUTSIDE OF STREAMS AND DRAINAGE CHANNELS

EROSION CONTROL BLANKET MAINTENANCE NOTES

1. THE GESC MANAGER SHALL INSPECT EROSION CONTROL BLANKETS WEEKLY, DURING AND AFTER ANY STORM EVENT AND MAKE REPAIRS AS NECESSARY.
2. EROSION CONTROL BLANKET IS TO BE LEFT IN PLACE UNLESS REQUESTED TO BE REMOVED BY SEMSWA.
3. ANY EROSION CONTROL BLANKET PULLED OUT, TORN, OR OTHERWISE DAMAGED SHALL BE RE-INSTALLED. ANY SUBGRADE AREAS BELOW THE BLANKET THAT HAVE ERODED TO CREATE A VOID UNDER THE BLANKET, OR THAT REMAIN DEVOID OF GRASS SHALL BE REPAIRED, RESEEDED AND MULCHED AND THE EROSION CONTROL BLANKET REINSTALLED.

▨ ECB EROSION CONTROL 9
BLANKET SHEET 2

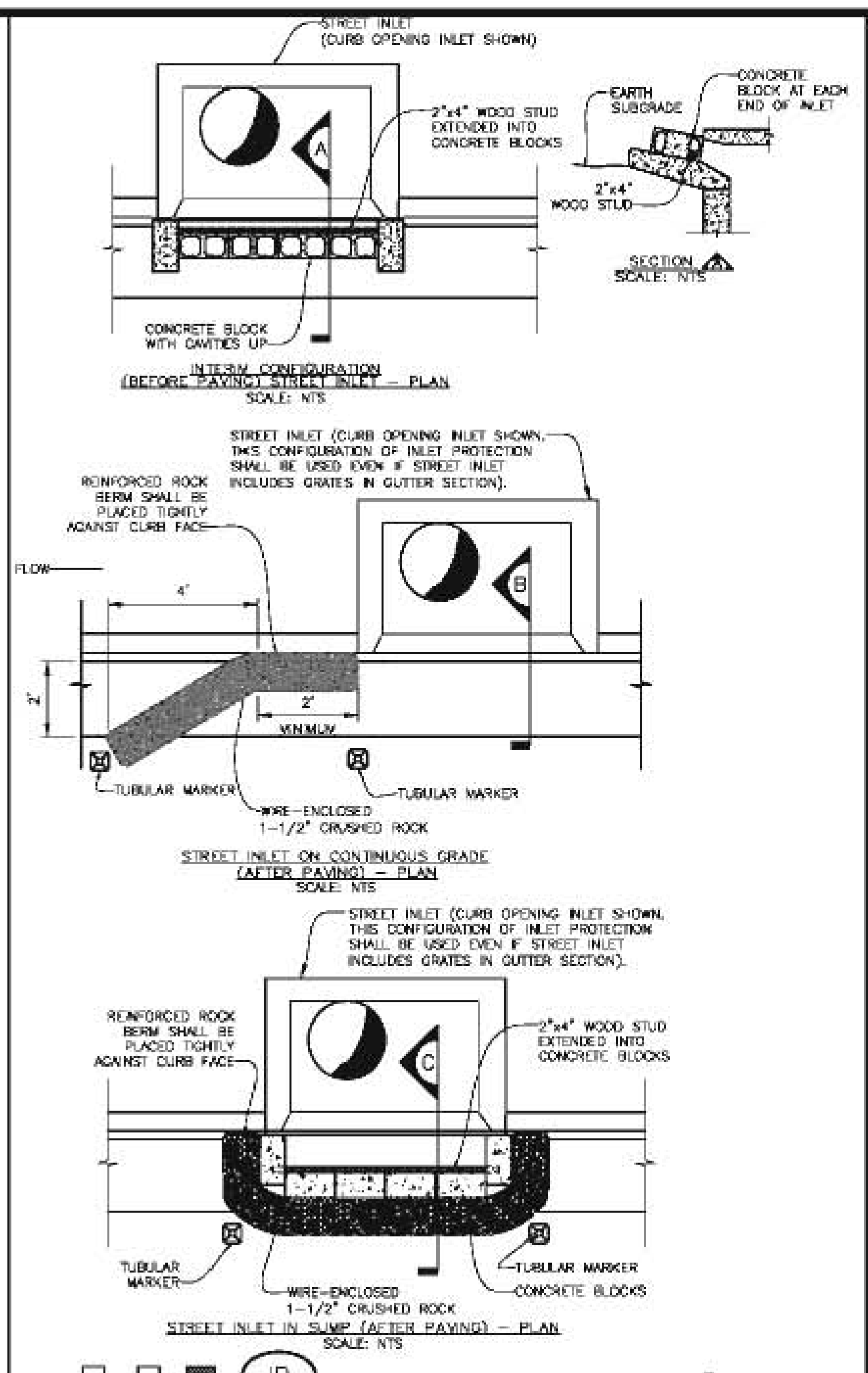
STREET INLET (CURB OPENING INLET SHOWN)
INTERIM CONFIGURATION (BEFORE PAVING) STREET INLET – PLAN
SCALE: NTS
STREET INLET ON CONTINUOUS GRADE (AFTER PAVING) – PLAN
SCALE: NTS
STREET INLET IN SUMP (AFTER PAVING) – PLAN
SCALE: NTS
TUBULAR MARKER
WIRE-ENCLOSED 1-1/2" CRUSHED ROCK
CONCRETE BLOCKS

IP INLET PROTECTION 10
SHEET 1

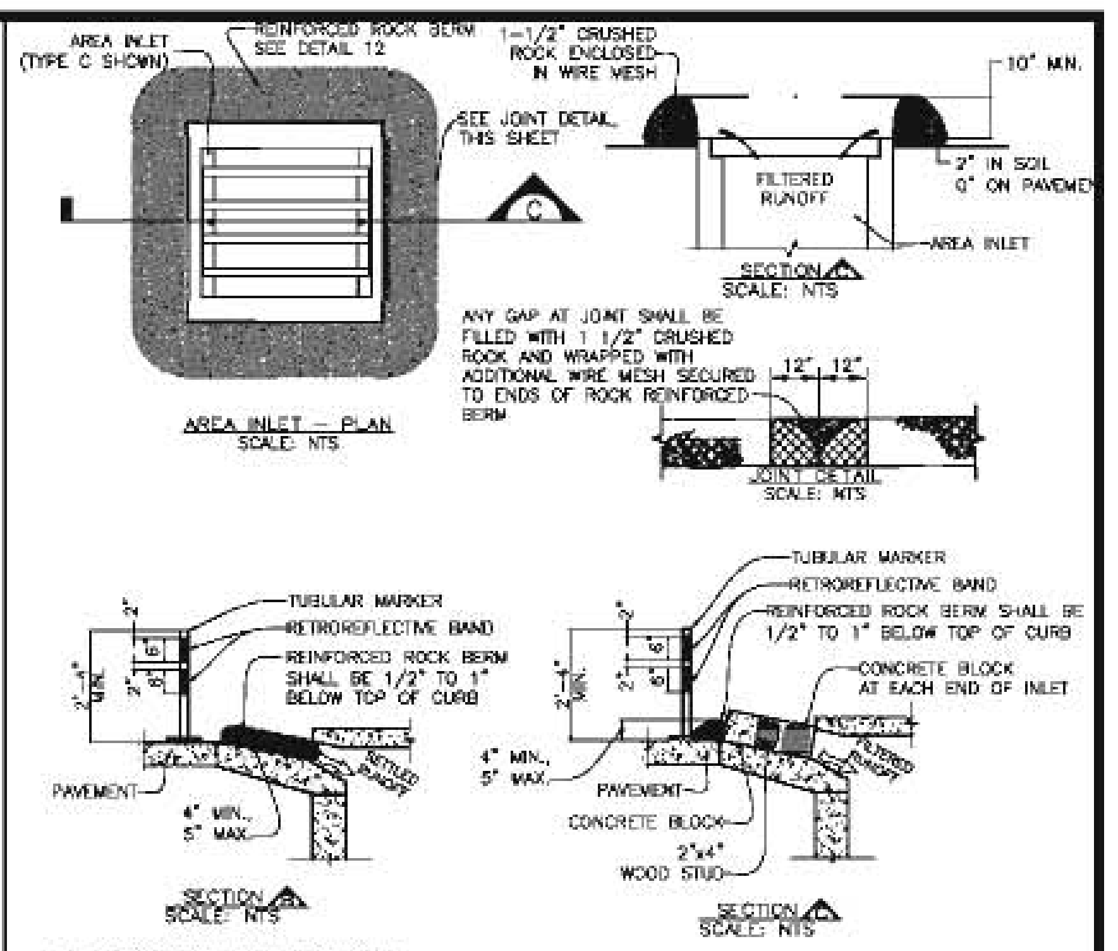
AREA INLET (TYPE C SHOWN)
AREA INLET – PLAN
SCALE: NTS
JOINT DETAIL
SECTION
SCALE: NTS
TUBULAR MARKER
RETROREFLECTIVE BAND
REINFORCED ROCK BERM
PAVEMENT
CONCRETE BLOCK
2"x4" WOOD STUD

INLET PROTECTION INSTALLATION NOTES

1. INTERIM CONFIGURATION OF INLET PROTECTION IN STREETS SHALL BE INSTALLED WITHIN 48-HOURS OF POURING INLET. INLET PROTECTION (AFTER PAVEMENT) SHALL BE INSTALLED WITHIN 48 HOURS AFTER PAVING IS PLACED.
2. INLET PROTECTION AT AREA INLETS SHALL BE INSTALLED WITHIN 48-HOURS OF POURING INLET.
3. CRUSHED ROCK SHALL BE FRACTURED FACE (ALL SIDES) AND SHALL COMPLY WITH GRADATION SHOWN ON SHEET 1 (1-1/2" MINUS). RECYCLED CONCRETE MEETING THIS GRADATION MAY BE USED.
4. WIRE MESH SHALL BE FABRICATED OF 10 GAUGE WIRE TWISTED INTO A MESH WITH A MAXIMUM OPENING OF 1.0 INCH (COMMONLY TERMED "CHICKEN WIRE"). ROLL WIDTH SHALL BE 48-INCHES.
5. WIRE MESH SHALL BE SECURED USING "HOG RINGS" OR WIRE TIES AT 6-INCH CENTERS ALONG ALL JOINTS AND AT 2-INCH CENTERS ON ENDS OF BERM.
6. REINFORCED ROCK BERM SHALL BE CONSTRUCTED IN ONE PIECE OR SHALL BE CONSTRUCTED USING JOINT DETAIL.
7. TUBULAR MARKERS SHALL MEET REQUIREMENTS OF MANUAL ON UNIFORM TRAFFIC CONTROL DEVICES (MUTCD), AS AMENDED.
8. THE TOP OF REINFORCED ROCK BERM SHALL BE 1/2"-1" BELOW TOP OF CURB.

INLET PROTECTION MAINTENANCE NOTES

1. THE GESC MANAGER SHALL INSPECT INLET PROTECTION WEEKLY, DURING AND AFTER ANY STORM EVENT AND MAKE REPAIRS OR CLEAN OUT AS NECESSARY. MORE FREQUENT INSPECTIONS AND REPAIRS SHALL BE REQUIRED DURING WINTER CONDITIONS DUE TO FREEZE/THAW PROBLEMS.
2. SEDIMENT ACCUMULATED UPSTREAM OF INLET PROTECTION SHALL BE REMOVED WHEN THE SEDIMENT DEPTH UPSTREAM OF ROCK BERM IS WITHIN 2-1/2 INCHES OF THE CREST.
3. INLET PROTECTION IS TO REMAIN IN PLACE UNTIL THE UPSTREAM DISTURBED AREA IS STABILIZED AND GRASS COVER IS APPROVED, UNLESS SEMSWA APPROVES EARLIER REMOVAL OF INLET PROTECTION IN STREETS.
4. WHEN INLET PROTECTION AT AREA INLETS ARE REMOVED, THE DISTURBED AREA SHALL BE DRILL SEEDED AND CRIMP MULCHED OR OTHERWISE STABILIZED IN A MANNER APPROVED BY SEMSWA.

IP INLET PROTECTION 10
SHEET 2

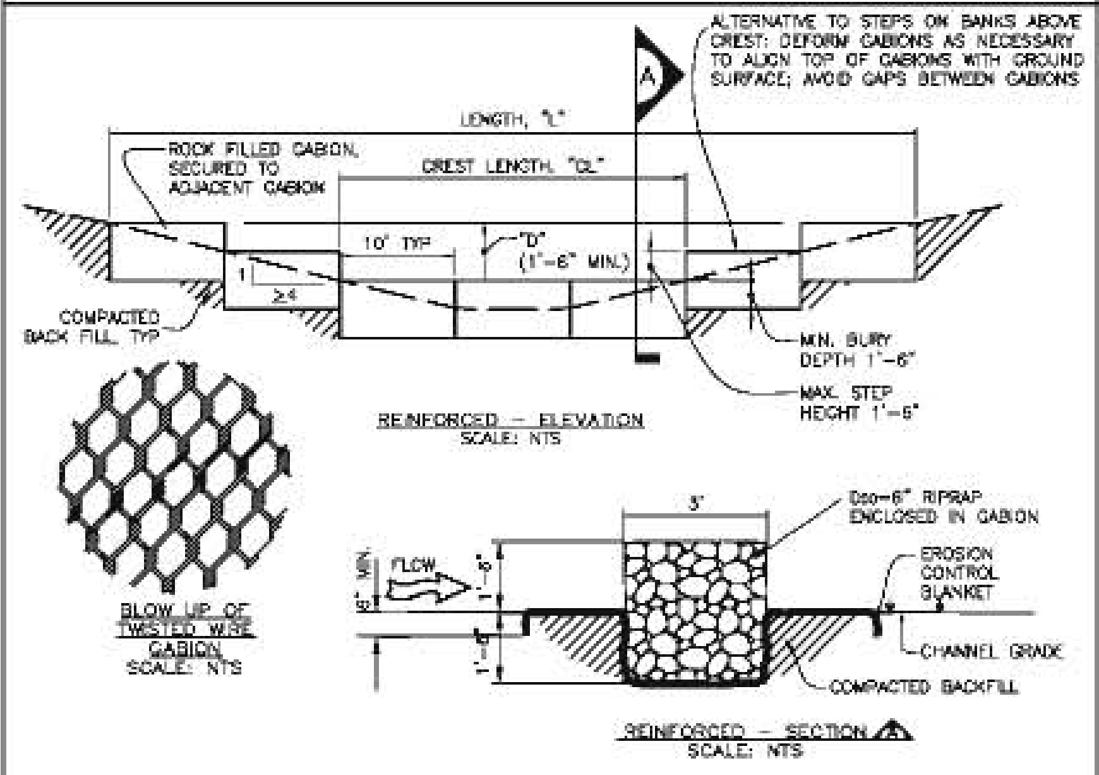
ALTERNATIVE TO STEPS ON BANKS ABOVE CREST: DEFORM GABIONS AS NECESSARY TO ALIGN TOP OF GABIONS WITH GROUND SURFACE; AVOID GAPS BETWEEN GABIONS
LENGTH, "L"
CREST LENGTH, "CL"
ROCK FILLED GABION, SECURED TO ADJACENT GABION
COMPACTED BACK FILL, TYP.
MIN. BURY DEPTH 1'-6"
MAX. STEP HEIGHT 1'-6"
REINFORCED – ELEVATION
SCALE: NTS
BLOW UP OF TWISTED WIRE GABION
SCALE: NTS
FLOW
EROSION CONTROL BLANKET
CHANNEL GRADE
COMPACTED BACKFILL
REINFORCED – SECTION
SCALE: NTS

REINFORCED CHECK DAM INSTALLATION NOTES

1. SEE PLAN VIEW FOR:
   - LOCATIONS OF CHECK DAMS.
   - CHECK DAM TYPE (CHECK DAM OR REINFORCED CHECK DAM).
   - LENGTH, "L", CREST LENGTH, "CL", AND DEPTH, "D".
2. CHECK DAMS INDICATED ON INITIAL GESC PLAN SHALL BE INSTALLED AFTER CONSTRUCTION FENCE, BUT PRIOR TO ANY UPSTREAM LAND-DISTURBING ACTIVITIES.
3. REINFORCED CHECK DAMS, GABIONS SHALL HAVE GALVANIZED TWISTED WIRE NETTING WITH A MAXIMUM OPENING DIMENSION OF 4-1/2" AND A MINIMUM WIRE THICKNESS OF 0.10". WIRE "HOG RINGS" AT 4" SPACING OR OTHER APPROVED MEANS SHALL BE USED AT ALL GABION SEAMS AND TO SECURE THE GABION TO THE ADJACENT GABION.
4. RIPRAP UTILIZED FOR CHECK DAMS SHALL HAVE A D50 MEDIAN STONE SIZE OF 6."
5. THE CHECK DAM SHALL BE TRENCHED INTO THE GROUND A MINIMUM OF 1'-6".
6. EROSION BLANKET SHALL BE PLACED IN THE REINFORCED CHECK DAM TRENCH EXTENDING A MINIMUM OF 1'-6" ON BOTH THE UPSTREAM AND DOWNSTREAM SIDES OF THE REINFORCED CHECK DAM.

REINFORCED CHECK DAM MAINTENANCE NOTES

1. THE GESC MANAGER SHALL INSPECT CHECK DAMS WEEKLY, DURING AND AFTER ANY STORM EVENT AND MAKE REPAIRS OR CLEAN OUT AS NECESSARY.
2. SEDIMENT ACCUMULATED UPSTREAM OF CHECK DAMS SHALL BE REMOVED WHEN THE SEDIMENT DEPTH UPSTREAM OF CHECK DAM IS WITHIN 1/2 OF THE HEIGHT OF THE CREST.
3. CHECK DAMS ARE TO REMAIN IN PLACE UNTIL THE UPSTREAM DISTURBED AREA IS STABILIZED AND GRASS COVER IS APPROVED BY SEMSWA.
4. WHEN CHECK DAMS ARE REMOVED, EXCAVATIONS SHALL BE FILLED WITH SUITABLE COMPACTED BACK FILL. ANY DISTURBED AREA SHALL BE DRILL SEEDED AND CRIMP MULCHED AND COVERED WITH EROSION CONTROL BLANKET OR OTHERWISE STABILIZED IN A MANNER APPROVED BY SEMSWA.

RCD REINFORCED CHECK DAM 11

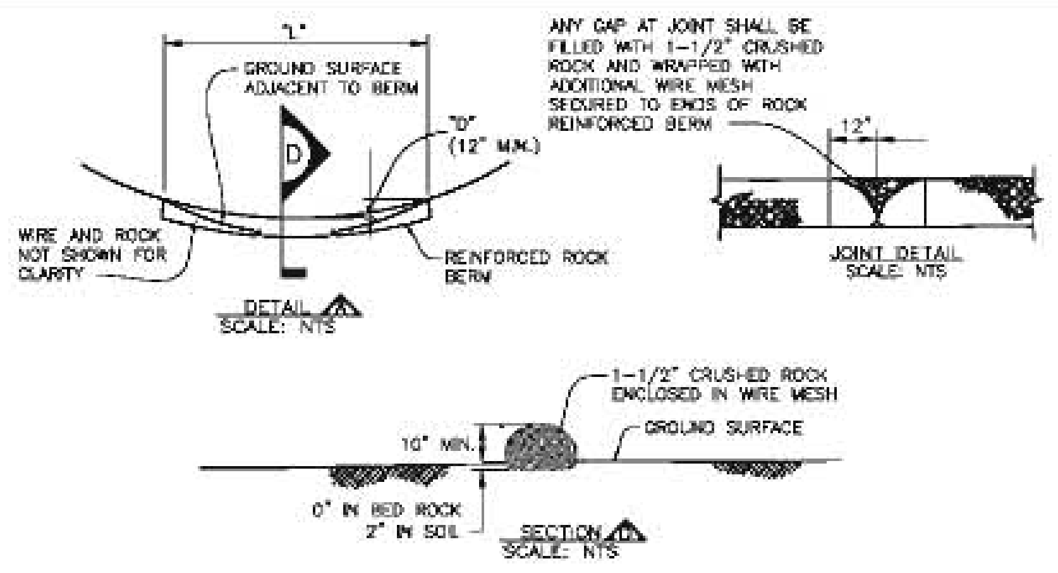
ANY GAP AT JOINT SHALL BE FILLED WITH 1-1/2" CRUSHED ROCK AND WRAPPED WITH ADDITIONAL WIRE MESH SECURED TO ENDS OF ROCK REINFORCED BERM
GROUND SURFACE ADJACENT TO BERM
WIRE AND ROCK NOT SHOWN FOR CLARITY
REINFORCED ROCK BERM
DETAIL
SCALE: NTS
JOINT DETAIL
SCALE: NTS
1-1/2" CRUSHED ROCK ENCLOSED IN WIRE MESH
GROUND SURFACE
0" IN BED ROCK
2" IN SOIL
SECTION
SCALE: NTS

REINFORCED ROCK BERM INSTALLATION NOTES

1. SEE PLAN VIEW FOR:
   - LOCATIONS OF REINFORCED ROCK BERMS.
   - LENGTH, "L", AND DEPTH, "D" DIMENSIONS.
2. REINFORCED ROCK BERM SECTION APPLIES TO CULVERT INLET FILTER AND INLET PROTECTION.
3. CRUSHED ROCK SHALL BE FRACTURED FACE (ALL SIDES) AND SHALL COMPLY WITH GRADATION SHOWN ON SHEET 1 (1-1/2" MINUS). RECYCLED CONCRETE MEETING THIS GRADATION MAY BE USED.
4. WIRE MESH SHALL BE FABRICATED OF 10 GAUGE WIRE TWISTED INTO A MESH WITH A MAXIMUM OPENING OF 1.0 INCH (COMMONLY TERMED "CHICKEN WIRE"). ROLL WIDTH SHALL BE 48-INCHES.
5. WIRE MESH SHALL BE SECURED USING "HOG RINGS" OR WIRE TIES AT 6-INCH CENTERS ALONG ALL JOINTS AND AT 2-INCH CENTERS ON ENDS OF BERM.
6. FOR CONCENTRATED FLOW AREAS THE ENDS OF THE REINFORCED ROCK BERM SHALL BE 12" HIGHER THAN THE CENTER OF THE BERM.

REINFORCED ROCK BERM MAINTENANCE NOTES

1. THE GESC MANAGER SHALL INSPECT REINFORCED ROCK BERM WEEKLY, DURING AND AFTER ANY STORM EVENT AND MAKE REPAIRS OR CLEAN OUT AS NECESSARY.
2. SEDIMENT ACCUMULATED UPSTREAM OF REINFORCED ROCK BERM SHALL BE REMOVED WHEN THE SEDIMENT DEPTH UPSTREAM OF FILTER IS WITHIN 5 INCHES OF THE CREST.
3. REINFORCED ROCK BERMS ARE TO REMAIN IN PLACE UNTIL THE UPSTREAM DISTURBED AREA IS STABILIZED AND GRASS COVER IS APPROVED.
4. WHEN REINFORCED ROCK BERMS ARE REMOVED, ANY DISTURBED AREA SHALL BE DRILL SEEDED AND CRIMP MULCHED OR OTHERWISE STABILIZED IN A MANNER APPROVED BY SEMSWA.

RRB REINFORCED ROCK BERM 12

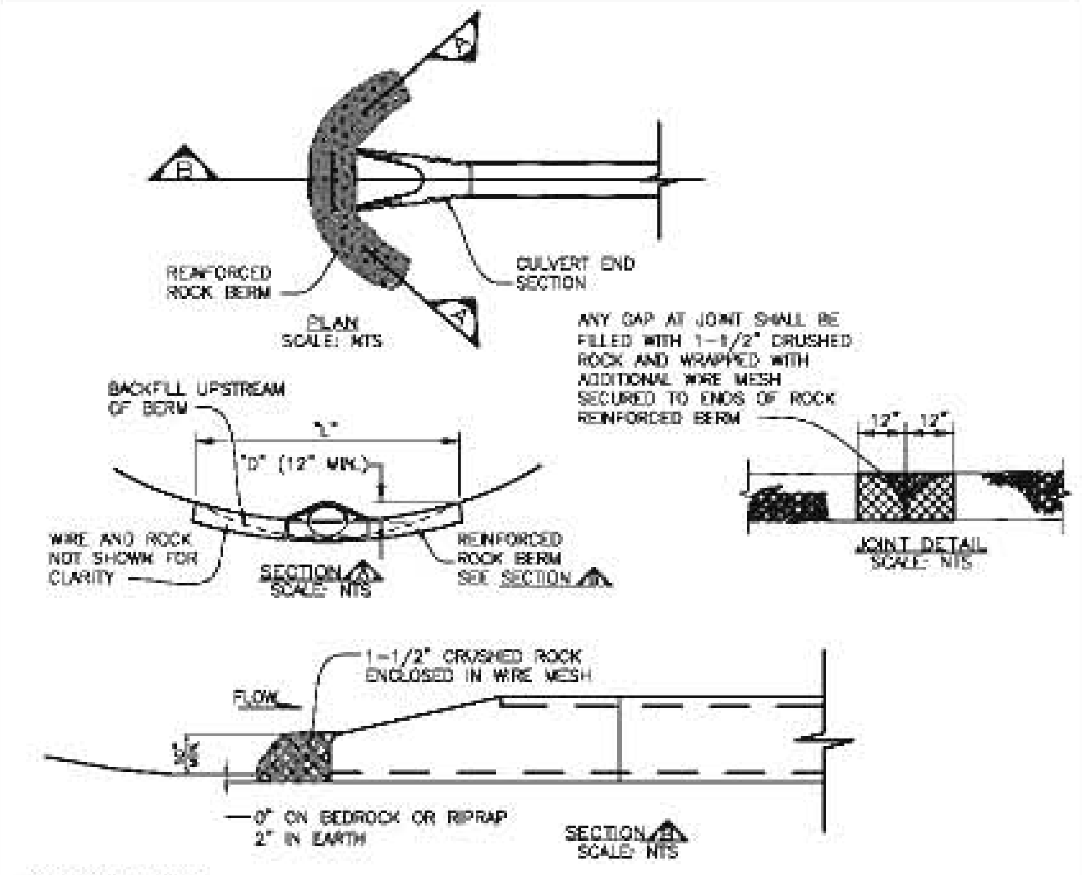
REINFORCED ROCK BERM
CULVERT END SECTION
PLAN
SCALE: NTS
ANY GAP AT JOINT SHALL BE FILLED WITH 1-1/2" CRUSHED ROCK AND WRAPPED WITH ADDITIONAL WIRE MESH SECURED TO ENDS OF ROCK REINFORCED BERM
BACKFILL UPSTREAM OF BERM
WIRE AND ROCK NOT SHOWN FOR CLARITY
SECTION
SCALE: NTS
JOINT DETAIL
SCALE: NTS
1-1/2" CRUSHED ROCK ENCLOSED IN WIRE MESH
FLOW
0" ON BEDROCK OR RIPRAP
2" IN EARTH
SECTION
SCALE: NTS

INSTALLATION NOTES

1. SEE PLAN VIEW FOR:
   - LOCATIONS OF CULVERT INLET FILTERS.
   - LENGTH, "L", AND DEPTH, "D".
2. CRUSHED ROCK SHALL BE FRACTURED FACE (ALL SIDES) AND SHALL COMPLY WITH GRADATION SHOWN ON SHEET 1 (1-1/2" MINUS). RECYCLED CONCRETE MEETING THIS GRADATION MAY BE USED.
3. WIRE MESH SHALL BE FABRICATED OF 10 GAUGE WIRE TWISTED INTO A MESH WITH A MAXIMUM OPENING OF 1.0 INCH (COMMONLY TERMED "CHICKEN WIRE").
4. WIRE MESH SHALL BE SECURED USING "HOG RINGS" OR WIRE TIES AT 6-INCH CENTERS ALONG ALL JOINTS AND AT 2-INCH CENTERS ON ENDS OF BERM.
5. THE ENDS OF THE REINFORCED ROCK BERM SHALL BE 12" HIGHER THAN THE CENTER OF THE BERM.

MAINTENANCE NOTES

1. THE GESC MANAGER SHALL INSPECT CULVERT INLET FILTER WEEKLY, DURING AND AFTER ANY STORM EVENT AND MAKE REPAIRS OR CLEAN OUT AS NECESSARY.
2. SEDIMENT ACCUMULATED UPSTREAM OF CULVERT INLET FILTER SHALL BE REMOVED WHEN THE SEDIMENT DEPTH UPSTREAM OF FILTER IS ½ THE HEIGHT OF THE REINFORCED ROCK BERM.
3. RRB FOR CULVERT PROTECTION ARE TO REMAIN IN PLACE UNTIL THE UPSTREAM DISTURBED AREA IS STABILIZED AND GRASS COVER IS APPROVED BY SEMSWA.
4. WHEN CULVERT INLET FILTERS ARE REMOVED, ANY DISTURBED AREA SHALL BE DRILL SEEDED AND CRIMP MULCHED OR OTHERWISE STABILIZED IN A MANNER APPROVED BY SEMSWA.

RRC RRB FOR CULVER 13
PROTECTION

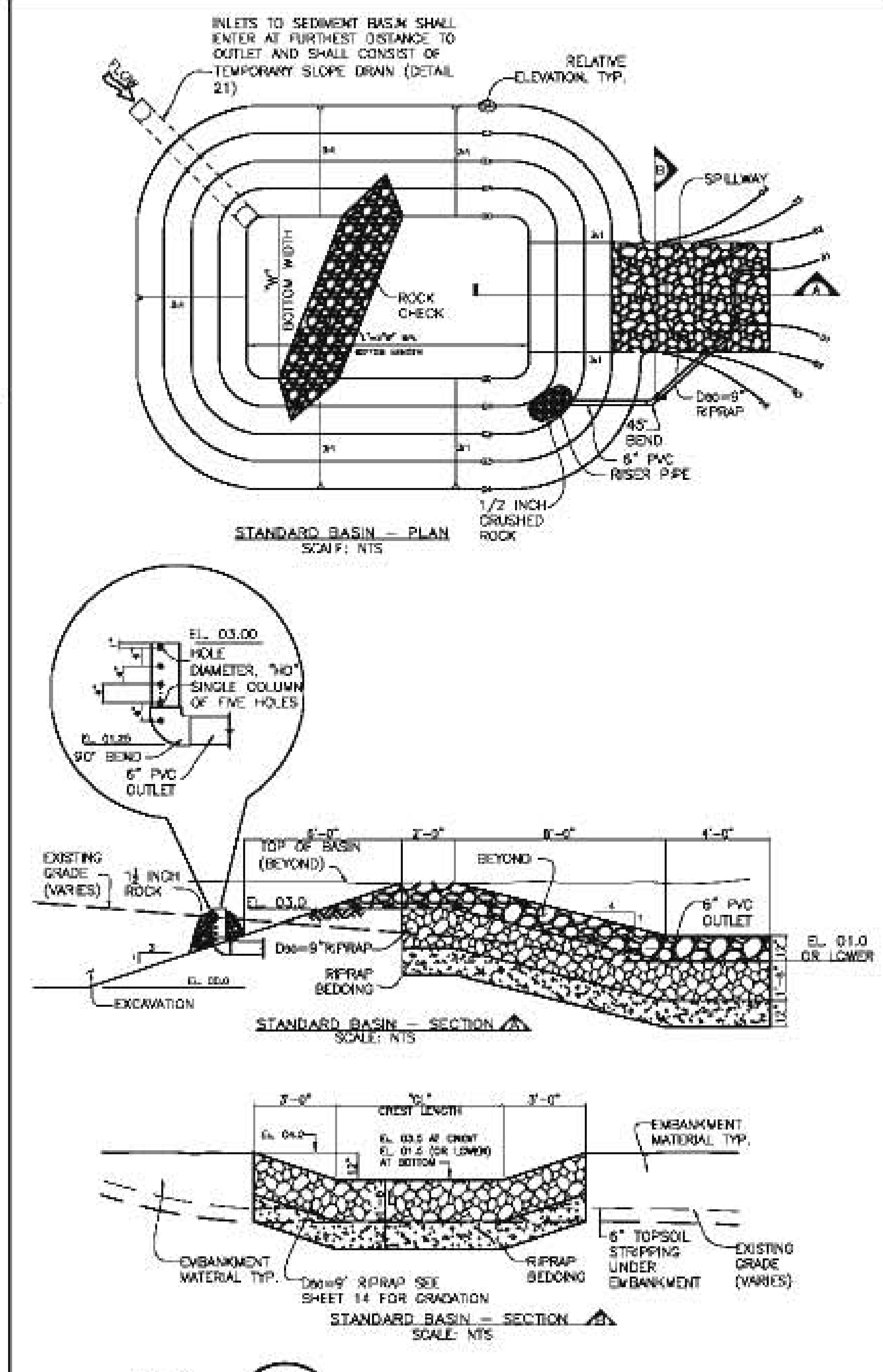
INLETS TO SEDIMENT BASIN SHALL ENTER AT FURTHEST DISTANCE TO OUTLET AND SHALL CONSIST OF TEMPORARY SLOPE DRAIN (DETAIL 21)
RELATIVE ELEVATION, TYP.
SPILLWAY
ROCK CHECK
BOTTOM WIDTH
45° BEND
6" PVC RISER PIPE
1/2 INCH CRUSHED ROCK
STANDARD BASIN – PLAN
SCALE: NTS
HOLE DIAMETER, "HD" SINGLE COLUMN OF FIVE HOLES
90° BEND
6" PVC OUTLET
EXISTING GRADE (VARIES)
TOP OF BASIN (BEYOND)
6" PVC OUTLET
RIPRAP BEDDING
EXCAVATION
STANDARD BASIN – SECTION
SCALE: NTS
EMBANKMENT MATERIAL TYP.
CREST LENGTH
6" TOPSOIL STRIPPING UNDER EMBANKMENT
EXISTING GRADE (VARIES)
RIPRAP BEDDING
D50=9" RIPRAP SEE SHEET 14 FOR GRADATION
STANDARD BASIN – SECTION
SCALE: NTS

SB SEDIMENT BASIN 14
SHEET 1

SEDIMENT BASIN INSTALLATION NOTES

1. SEE PLAN VIEW FOR:
   - LOCATION OF SEDIMENT BASIN.
   - TYPE OF BASIN (STANDARD BASIN OR NON-STANDARD BASIN).
   - FOR STANDARD BASIN, CREST LENGTH, "CL", BOTTOM WIDTH, "W", AND HOLE DIAMETER, "HD".
   - FOR NON-STANDARD BASIN, SEE CONSTRUCTION DRAWINGS FOR DESIGN OF BASIN INCLUDING RISER HEIGHT, "H", NUMBER OF COLUMNS, "N", HOLE DIAMETER, "HD", AND PIPE DIAMETER "D".
2. FOR STANDARD BASIN, BOTTOM DIMENSION MAY BE MODIFIED AS LONG AS BOTTOM AREA IS NOT REDUCED.
3. SEDIMENT BASINS INDICATED ON INITIAL GESC PLAN SHALL BE INSTALLED PRIOR TO ANY OTHER LAND-DISTURBING ACTIVITY.
4. EMBANKMENT MATERIAL SHALL CONSIST OF SOIL FREE OF DEBRIS, ORGANIC MATERIAL, AND ROCKS OR CONCRETE GREATER THAN 3 INCHES AND SHALL HAVE A MINIMUM OF 15 PERCENT BY WEIGHT PASSING THE NO. 200 SIEVE.
5. EMBANKMENT MATERIAL SHALL BE COMPACTED TO AT LEAST 95 PERCENT OF MAXIMUM DENSITY WITHIN 2
6. PERCENTAGE POINTS OF OPTIMUM DENSITY IN ACCORDANCE WITH ASTM D698.
7. PIPE SCH 40 OR GREATER SHALL BE USED.
8. THE DETAILS SHOWN ON THIS SHEET PERTAIN TO STANDARD SEDIMENT BASIN(S) IDENTIFIED ON THE GESC PLAN VIEW DRAWINGS USED FOR DRAINAGE AREAS LESS THAN 15 ACRES. SEE CONSTRUCTION DRAWINGS FOR EMBANKMENT, STORAGE VOLUME, SPILLWAY, OUTLET, AND OUTLET PROTECTION DETAILS FOR ANY SEDIMENT BASIN(S) THAT HAVE BEEN INDIVIDUALLY DESIGNED FOR DRAINAGE AREAS LARGER THAN 15 ACRES.

SEDIMENT BASIN MAINTENANCE NOTES

1. THE GESC MANAGER SHALL INSPECT SEDIMENT BASIN WEEKLY, DURING AND AFTER ANY STORM EVENT AND MAKE REPAIRS OR CLEAN OUT AS NECESSARY.
2. SEDIMENT SHALL BE REMOVED FROM THE POND ONCE IT REACHES 1 FOOT IN DEPTH OR 20% OF THE PONDS WATER QUALITY CAPTURE VOLUME, WHICHEVER IS LESS.
3. SEDIMENT BASINS ARE TO REMAIN IN PLACE UNTIL THE UPSTREAM DISTURBED AREA IS STABILIZED AND GRASS COVER IS APPROVED BY SEMSWA.
4. IF SEDIMENT BASINS ARE REMOVED, THE DISTURBED AREA SHALL BE SEEDED AND MULCHED OR OTHERWISE STABILIZED IN A MANNER APPROVED BY SEMSWA.

SB SEDIMENT BASIN 14
SHEET 2

UTILITY NOTIFICATION CENTER
OF COLORADO
CALL BEFORE YOU DIG
811
Call 2 days prior to any digging, grading or excavating for the marking of underground member utilities

SOUTHEAST METRO STORMWATER AUTHORITY
76 INVERNESS DRIVE EAST
CENTENNIAL COLORADO
80112-5106
(303) 858-8844 - INSPECTION DIVISION
(303) 267-9552

Southeast Metro Stormwater Authority

GRADING EROSION AND SEDIMENT CONTROL
STANDARD NOTES AND DETAILS

GESC
SHEET
2 OF 4

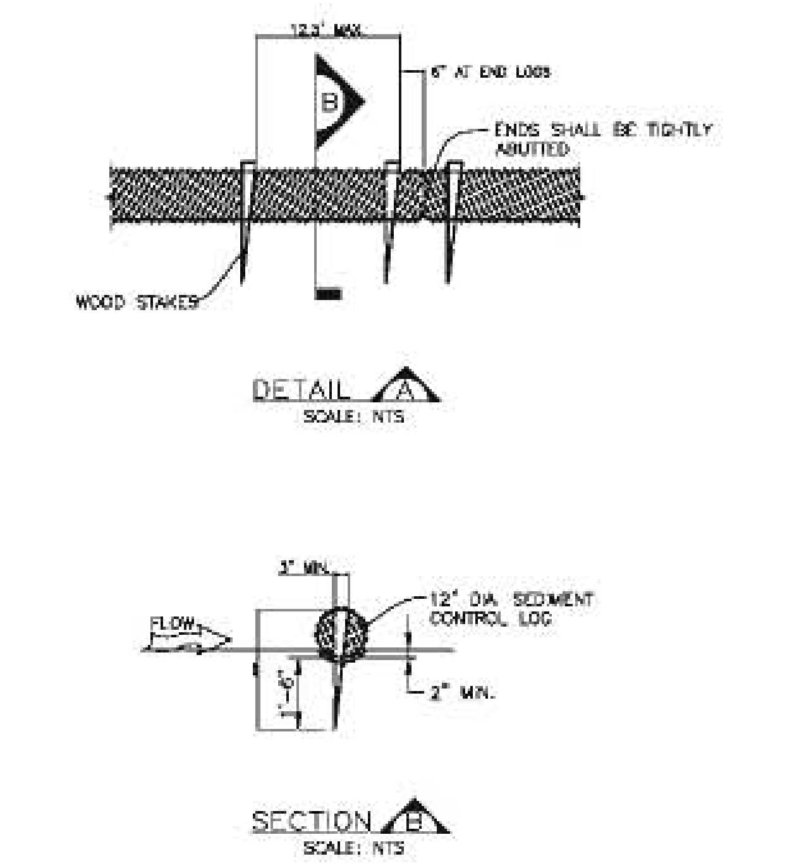
12.5' MAX.
6" AT END LOGS
ENDS SHALL BE TIGHTLY ABUTTED
WOOD STAKES
DETAIL A
SCALE: NTS
3" MIN.
12" DIA. SEDIMENT CONTROL LOG
FLOW
2" MIN.
SECTION B
SCALE: NTS

SEDIMENT CONTROL LOG INSTALLATION NOTES

1. SEE PLAN VIEW FOR:
   - LOCATION AND LENGTH OF SEDIMENT CONTROL LOG.
2. SEDIMENT CONTROL LOGS INDICATED ON INITIAL GESC PLAN SHALL BE INSTALLED PRIOR TO ANY LAND-DISTURBING ACTIVITIES.
3. SEDIMENT CONTROL LOGS SHALL CONSIST OF STRAW, COMPOST, EXCELSIOR, OR COCONUT FIBER.
4. NOT FOR USE IN CONCENTRATED FLOW AREAS.
5. THE SEDIMENT CONTROL LOG SHALL BE TRENCHED INTO THE GROUND A MINIMUM OF 2".

SEDIMENT CONTROL LOG MAINTENANCE NOTES

1. THE GESC MANAGER SHALL INSPECT SEDIMENT CONTROL LOGS DAILY, DURING AND AFTER ANY STORM EVENT AND MAKE REPAIRS OR CLEAN OUT UPSTREAM SEDIMENT AS NECESSARY.
2. SEDIMENT ACCUMULATED UPSTREAM OF SEDIMENT CONTROL LOGS SHALL BE REMOVED WHEN THE UPSTREAM SEDIMENT DEPTH IS WITHIN ½ THE HEIGHT OF THE CREST OF LOG.
3. SEDIMENT CONTROL LOG SHALL BE REMOVED AT THE END OF CONSTRUCTION. IF ANY DISTURBED AREA EXISTS AFTER REMOVAL, IT SHALL BE DRILL SEEDED AND CRIMP MULCHED OR OTHERWISE STABILIZED IN A MANNER APPROVED BY SEMSWA.

SCL SEDIMENT CONTROL LOG (15)

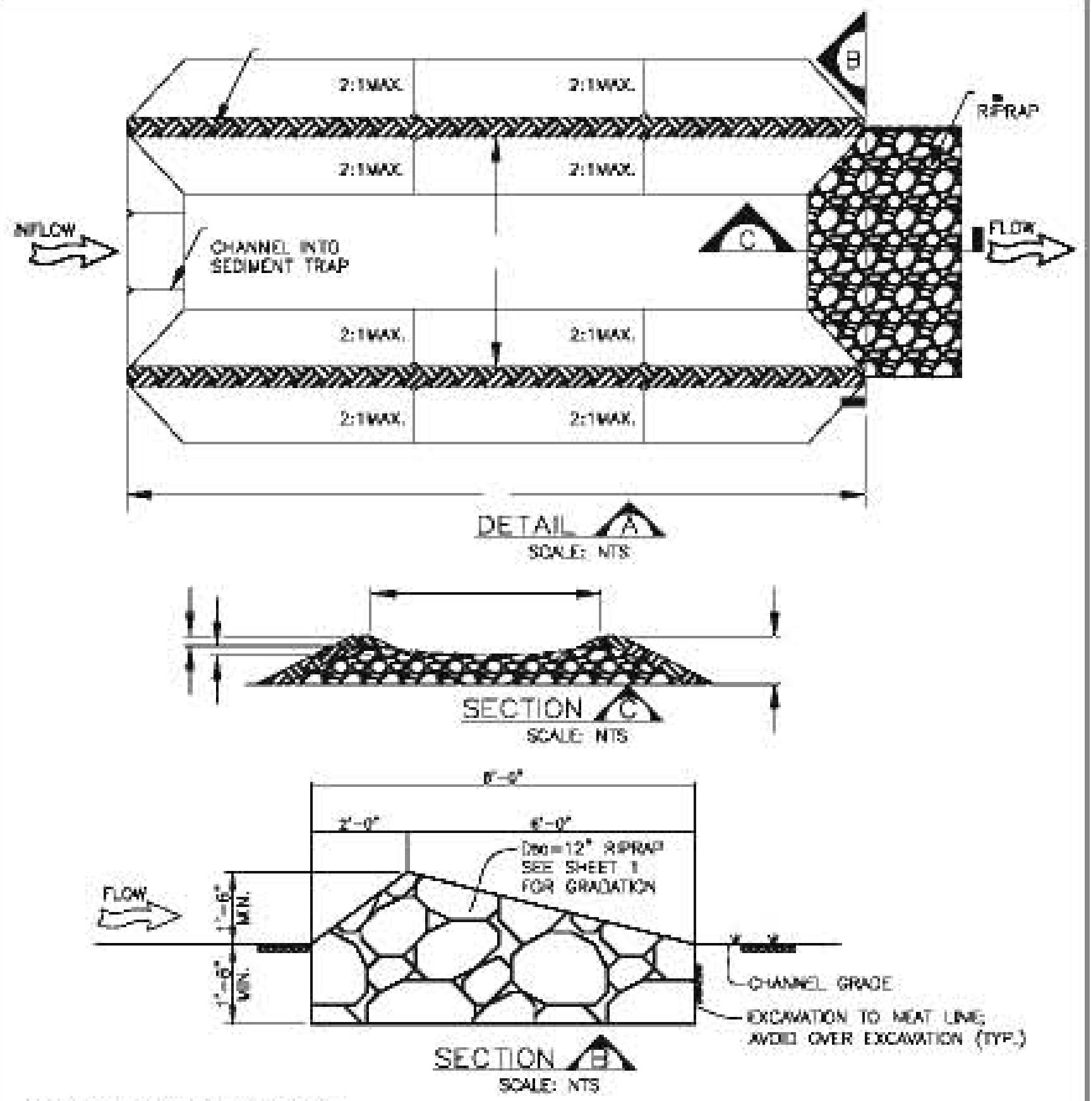
2:1MAX.
B
RIPRAP
INFLOW
CHANNEL INTO SEDIMENT TRAP
C
FLOW
DETAIL A
SCALE: NTS
SECTION C
SCALE: NTS
6'-0"
2'-0"
D₅₀=12" RIPRAP SEE SHEET 1 FOR GRADATION
1'-6" MIN.
CHANNEL GRADE
EXCAVATION TO NEAT LINE; AVOID OVER EXCAVATION (TYP.)
SECTION B
SCALE: NTS

SEDIMENT TRAP INSTALLATION NOTES

1. SEE PLAN VIEW FOR:
   - LOCATION, LENGTH AND WIDTH OF SEDIMENT TRAP.
2. SEDIMENT TRAPS INDICATED ON INITIAL GESC PLAN SHALL BE INSTALLED PRIOR TO ANY LAND-DISTURBING ACTIVITIES.
3. SEDIMENT TRAP BERM SHALL BE CONSTRUCTED FROM MATERIAL FROM EXCAVATION. THE BERM SHALL BE COMPACTED TO 95% OF THE MAXIMUM DENSITY IN ACCORDANCE WITH ASTM D698.
4. RIPRAP OUTLET SHALL BE CONSTRUCTED WITH D_{50} =12" RIPRAP WITH A MINIMUM OVERFLOW OF 6".
5. THE TOP OF THE EARTHEN BERM SHALL BE A MINIMUM OF 6" HIGHER THAN THE TOP OF THE RIPRAP OUTLET STRUCTURE.
6. THE ENDS OF THE RIPRAP OUTLET STRUCTURE SHALL BE MINIMUM OF 6" HIGHER THAN THE CENTER OF THE OUTLET STRUCTURE.

SEDIMENT TRAP MAINTENANCE NOTES

1. THE GESC MANAGER SHALL INSPECT SEDIMENT TRAPS WEEKLY, DURING AND AFTER ANY STORM EVENT AND MAKE REPAIRS OR CLEAN OUT UPSTREAM SEDIMENT AS NECESSARY.
2. SEDIMENT ACCUMULATED UPSTREAM OF RIPRAP SHALL BE REMOVED WHEN THE UPSTREAM SEDIMENT DEPTH IS WITHIN ½ THE HEIGHT OF THE RIPRAP OUTLET STRUCTURE.
3. SEDIMENT TRAPS SHALL REMAIN IN PLACE UNTIL THE UPSTREAM DISTURBED AREA IS STABILIZED AND GRASS COVERAGE IS APPROVED BY SEMSWA.
4. WHEN SEDIMENT TRAPS ARE REMOVED THE DISTURBED AREA SHALL BE DRILLED SEEDED AND CRIMP MULCHED OR STABILIZED IN A MANNER APPROVED BY SEMSWA.

ST SEDIMENT TRAP (16)

SEEDING AND MULCHING INSTALLATION NOTES

1. SEE PLAN VIEW FOR:
   - AREA OF SEEDING AND MULCHING.
   - TYPE OF SEED MIX (PERMANENT, TEMPORARY, OR LOW-GROWTH).
2. ALL BRANDS FURNISHED SHALL BE FREE FROM SUCH NOXIOUS SEEDS AS RUSSIAN OR CANADIAN THISTLE, COARSE FESCUE, EUROPEAN BINDWEED, JOHNSON GRASS, KNAP WEED AND LEAFY SPURGE.
3. THE SEEDER SHALL FURNISH TO THE CONTRACTOR A SIGNED STATEMENT CERTIFYING THAT THE SEED FURNISHED IS FROM A LOT THAT HAS BEEN TESTED BY A RECOGNIZED LABORATORY. SEED WHICH HAS BECOME WET, MOLDY, OR OTHERWISE DAMAGED IN TRANSIT OR IN STORAGE WILL NOT BE ACCEPTABLE. SEED TICKETS SHALL BE PROVIDED TO ARAPAHOE COUNTY UPON REQUEST.
4. DRILL SEEDING MIX SHALL CONFORM TO THE TABLE ON THE RIGHT: UNLESS OTHERWISE APPROVED BY SEMSWA.
5. IF THE SEED AVAILABLE ON THE MARKET DOES NOT MEET THE MINIMUM PURITY AND GERMINATION PERCENTAGES SPECIFIED, THE SUBCONTRACTOR MUST COMPENSATE FOR A LESSER PERCENTAGE OF PURITY OR GERMINATION BY FURNISHING SUFFICIENT ADDITIONAL SEED TO EQUAL THE SPECIFIED PRODUCT. THE TAGS FROM THE SEED MIXES MUST BE SUPPLIED TO CONTRACTOR AND FORWARDED TO THE SEMSWA GESC INSPECTOR.
6. THE FORMULA USED FOR DETERMINING THE QUANTITY OF PURE LIVE SEED (PLS) SHALL BE (POUNDS OF SEED) X (PURITY) X (GERMINATION) = POUNDS OF PURE LIVE SEED (PLS).
7. PERMANENT SEED MIX SHALL BE USED UNLESS OTHERWISE APPROVED BY SEMSWA.
8. ALL AREAS TO BE SEEDED AND MULCHED SHALL HAVE NATIVE TOPSOIL OR APPROVED SOIL AMENDMENTS SPREAD TO A DEPTH OF AT LEAST 6 INCHES (LOOSE DEPTH). HAUL ROADS AND OTHER COMPACTED AREAS SHALL BE LOOSENED TO A DEPTH OF 6 INCHES PRIOR TO SPREADING TOPSOIL.
9. SOIL IS TO BE THOROUGHLY LOOSENED (TILLED) TO A DEPTH OF AT LEAST 6 INCHES PRIOR TO SEEDING. THE TOP 6 INCHES OF THE SEED BED SHALL BE FREE OF ROCKS GREATER THAN 4 INCHES AND SOIL CLODS GREATER THAN 2 INCHES. SEEDING OVER ANY COMPACTED AREAS THAT HAVEN'T BEEN THOROUGHLY LOOSENED SHALL BE REJECTED.
10. SEED IS TO BE APPLIED USING A MECHANICAL DRILL TO A DEPTH OF 1/4 INCH. ROW SPACING SHALL BE NO MORE THAN 8 INCHES. MATERIAL USED FOR MULCH SHALL CONSIST OF LONG-STEMMED STRAW. AT LEAST 50 PERCENT OF THE MULCH, BY WEIGHT, SHALL BE 10 INCHES OR MORE IN LENGTH. MULCH SHALL BE APPLIED AND MECHANICALLY ANCHORED TO A DEPTH OF AT LEAST 2 INCHES. MULCH SHALL BE APPLIED AT A RATE OF 4000 LB. OF STRAW PER ACRE.
11. IF THE PERMITTEE DEMONSTRATES TO SEMSWA THAT IT IS NOT POSSIBLE TO DRILL SEED, SEED IS TO BE UNIFORMLY BROADCAST AT TWO TIMES THE DRILLED RATE, THEN LIGHTLY HARROWED TO PROVIDE A SEED DEPTH OF APPROXIMATELY 1/4 INCH, THEN ROLLED TO COMPACT, THEN MULCHED AS SPECIFIED ABOVE.
12. WHEN SEEDING AND MULCHING IS USED TO STABILIZED DISTURBED AREAS, ALL DISTURBED AREAS WHICH ARE EITHER FINAL GRADED, OR WILL REMAIN INACTIVE FOR A PERIOD OF MORE THAN 30 DAYS SHALL BE REQUIRED TO BE STABILIZED WITHIN 14 DAYS OF THE COMPLETION OF THE GRADING ACTIVITIES. THIS MAY REQUIRED MULTIPLE MOBILIZATIONS FOR SEEDING AND MULCHING.
13. MULCH SHALL BE APPLIED WITHIN 24-HOURS OF SEEDING.
14. TACKIFIER SHOULD BE UTILIZED TO HELP WITH STRAW DISPLACEMENT.

SEEDING AND MULCHING MAINTENANCE NOTES

1. SEEDED AND MULCHED AREAS SHALL BE INSPECTED FOR REQUIRED COVERAGE MONTHLY FOR A PERIOD OF TWO YEARS FOLLOWING INITIAL SEEDING. REPAIRS AND RE-SEEDING AND MULCHING SHALL BE UNDERTAKEN AFTER THE FIRST GROWING SEASON FOR ANY AREAS FAILING TO MEET THE REQUIRED COVERAGE.
2. REQUIRED COVERAGE FOR STANDARD, OPEN SPACE AND LOW GROWTH SEED MIXES SHALL BE DEFINED AS FOLLOWS:
   - 2.1. THREE (3) PLANTS PER SQUARE FOOT WITH A MINIMUM HEIGHT OF 3 INCHES.
   - 2.2. THE 3 PLANTS PER SQUARE FOOT SHALL BE OF THE VARIETY AND SPECIES FOUND IN THE SEMSWA-APPROVED MIX. NO BARE AREAS LARGER THAN 4 SQUARE FEET (TWO-FEET BY TWO-FEET OR EQUIVALENT).
   - 2.3. FREE OF ERODED AREAS.
   - 2.4. FREE FROM INFESTATION OF NOXIOUS WEEDS IN ACCORDANCE WITH SECTION 6.4 OF THE GESC CRITERIA MANUAL.
3. REQUIRED COVERAGE FOR TURF GRASS AREAS SHALL BE DEFINED AS FOLLOWS:
   - 3.1. AT LEAST 80% VEGETATIVE COVER OF GRASS SPECIES PLANTED.
   - 3.2. NO BARE AREAS LARGER THAN 4 SQUARE FEET (TWO-FEET BY TWO-FEET OR EQUIVALENT).
   - 3.3. FREE OF ERODED AREAS.
   - 3.4. FREE FROM INFESTATION OF NOXIOUS WEEDS IN ACCORDANCE WITH SECTION 6.4 OF THE GESC CRITERIA MANUAL.
4. RILL AND GULLY EROSION SHALL BE FILLED WITH TOPSOIL PRIOR TO RESEEDING. THE RESEEDING METHOD SHALL BE APPROVED BY SEMSWA.

SM SEEDING AND MULCHING (17)

SEMSWA PERMANENT DRILL SEEDING MIX

SPECIES	VARIETY	NOTES	% IN MIX	POUNDS OF PLS PER ACRE
BIG BLUESTEM	KAW	PNWS	10	1.1
YELLOW INDIANGRASS	CHEYENNE	PNWS	10	1
SWITCHGRASS	BLACKWELL	PNWS	10	0.4
SIDEOATS GRAMA	VAUGHN	PNWB	10	0.9
WESTERN WHEATGRASS	ARRIBA	PNCS	10	1.6
BLUE GRAMA	HACHITA	PNWB	10	0.3
THICKSPIKE WHEATGRASS	CRITANA	PNCS	10	1
PRAIRIE SANDREED	GOSHEN	PNWS	10	0.7
GREEN NEEDLEGRASS	LODORM	PNCB	10	1
SLENDER WHEATGRASS	PRYOR	PNCB	5	0.8
STREAMBANK WHEATGRASS	SODAR	PNCS	5	0.6
			TOTAL	9.2

SEMSWA TEMPORARY DRILL SEEDING MIX

SPECIES	VARIETY	NOTES	% IN MIX	POUNDS OF PLS PER ACRE
SMOOTH BROMEGRASS	LINCOLN	PICS	30	3.9
INTERMEDIATE WHEATGRASS	OAHE	PICS	30	4.5
PUBESCENT WHEATGRASS	LUNA	PICS	30	4.2
ANNUAL RYEGRASS	N/A	AICB	10	0.8
			TOTAL	13.4

SEMSWA LOW-GROWTH DRILL SEEDING MIX

SPECIES	VARIETY	NOTES	% IN MIX	POUNDS OF PLS PER ACRE
BUFFALOGRASS	TEXOKA	PNWS	20	3.2
BLUE GRAMA	HACHITA	PNWB	20	0.8
WESTERN WHEATGRASS	ARRIBA	PNCS	20	3.2
SIDEOATS GRAMA	VAUGHN	PNWB	20	1.8
THICKSPIKE WHEATGRASS	CRITANA	PNCS	10	1
STREAMBANK WHEATGRASS	SODAR	PNCS	10	1.2
			TOTAL	11.0

SM SEEDING AND MULCHING (17)

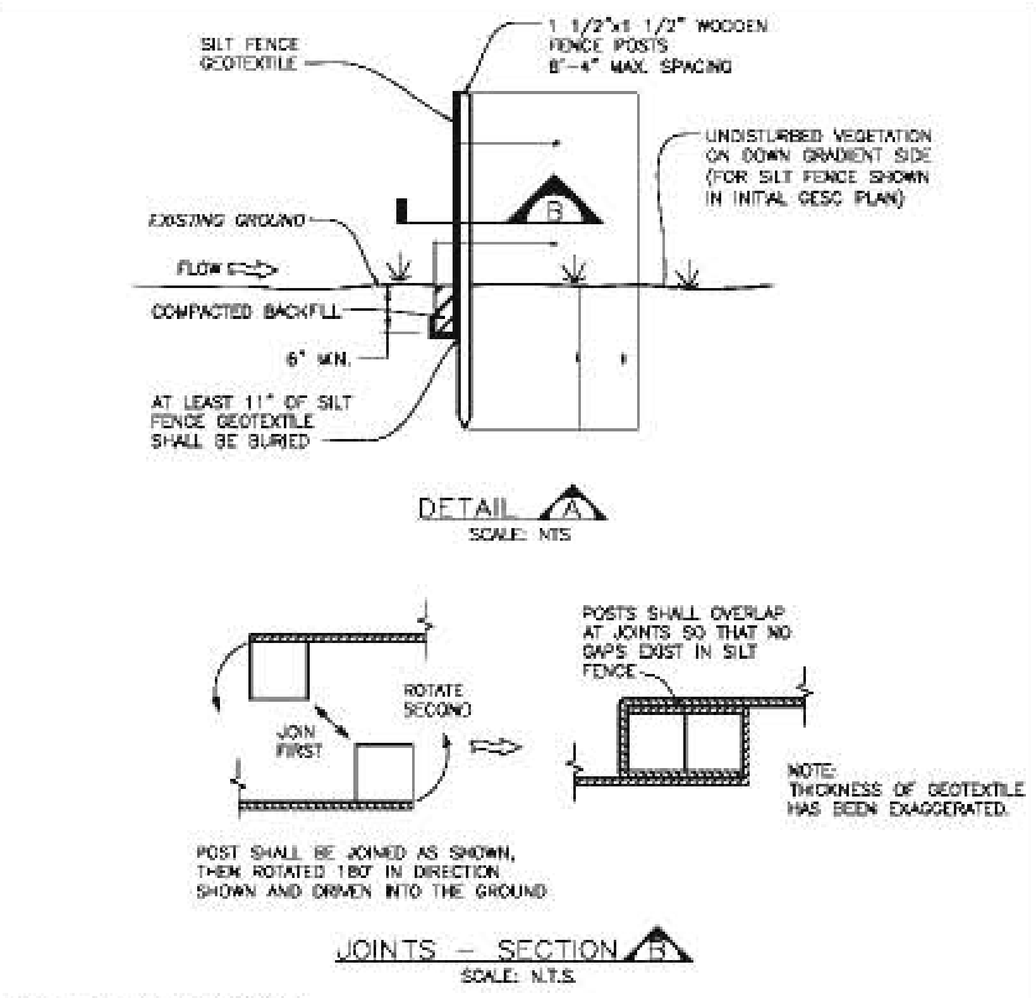
SILT FENCE GEOTEXTILE
1 1/2"x1 1/2" WOODEN FENCE POSTS 8'-4' MAX. SPACING
UNDISTURBED VEGETATION ON DOWN GRADIENT SIDE (FOR SILT FENCE SHOWN IN INITIAL GESC PLAN)
EXISTING GROUND
FLOW
COMPACTED BACKFILL
6" MIN.
AT LEAST 11" OF SILT FENCE GEOTEXTILE SHALL BE BURIED
DETAIL A
SCALE: NTS
POSTS SHALL OVERLAP AT JOINTS SO THAT NO GAPS EXIST IN SILT FENCE
JOIN FIRST
ROTATE SECOND
NOTE: THICKNESS OF GEOTEXTILE HAS BEEN EXAGGERATED.
POST SHALL BE JOINED AS SHOWN, THEN ROTATED 180° IN DIRECTION SHOWN AND DRIVEN INTO THE GROUND
JOINTS - SECTION B
SCALE: N.T.S.

SILT FENCE INSTALLATION NOTES

1. SEE PLAN VIEW FOR:
   - LOCATION AND LENGTH OF FENCE.
2. ANCHOR TRENCH SHALL BE EXCAVATED WITH TRENCHER, OR WITH SILT FENCE INSTALLATION MACHINE; NO ROAD GRADERS, BACKHOES, ETC. SHALL BE USED. TRENCH SHALL BE COMPACTED BY HAND, WITH "JUMPING JACK", OR BY WHEEL ROLLING. COMPACTION SHALL BE SUCH THAT SILT FENCE RESISTS BEING PULLED OUT OF ANCHOR TRENCH BY HAND.
3. SILT FENCE GEOTEXTILE SHALL MEET THE FOLLOWING REQUIREMENTS:
   - 8-TO 12-GALLONS PER MINUTE PER SQUARE FOOT FLOW CAPACITY.
   - 90 LB. TENSILE STRENGTH PER ASTM D4632.
   - UV DESIGN AT 500 HRS MIN. 70% STRENGTH RETAINED PER ASTM D 4355.
4. SILT FENCE INDICATED ON INITIAL GESC PLAN SHALL BE INSTALLED PRIOR TO ANY LAND-DISTURBING ACTIVITIES.

SILT FENCE MAINTENANCE NOTES

1. THE GESC MANAGER SHALL INSPECT SILT FENCE DAILY, DURING AND AFTER ANY STORM EVENT AND MAKE REPAIRS OR CLEAN OUT UPSTREAM SEDIMENT AS NECESSARY.
2. SEDIMENT ACCUMULATED UPSTREAM OF SILT FENCE SHALL BE REMOVED WHEN THE UPSTREAM SEDIMENT REACHES A DEPTH OF 6-INCHES.
3. SILT FENCE SHALL BE REMOVED WHEN THE UPSTREAM DISTURBED AREA IS STABILIZED AND GRASS COVER IS APPROVED BY SEMSWA. IF ANY DISTURBED AREA EXISTS AFTER REMOVAL, IT SHALL BE SEEDED AND MULCHED OR OTHERWISE STABILIZED IN A MANNER APPROVED BY SEMSWA.

SF SILT FENCE (18)

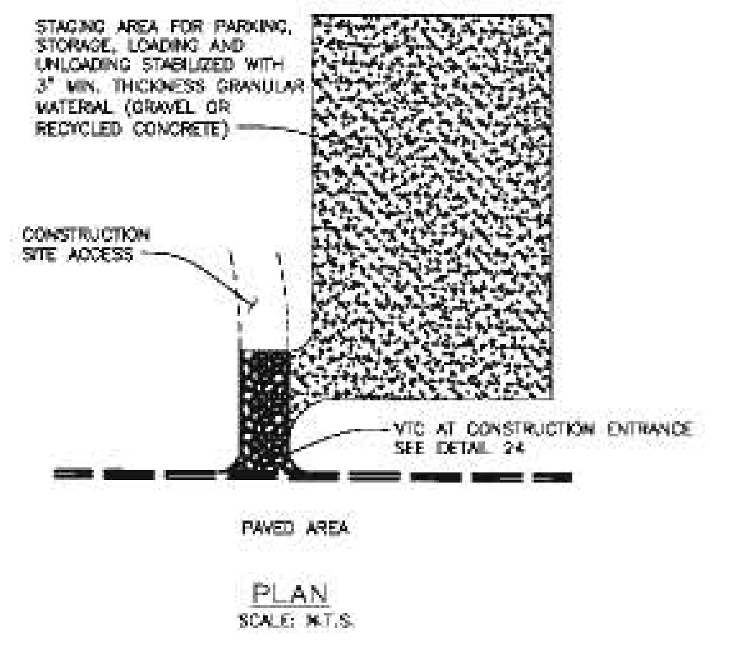
STAGING AREA FOR PARKING, STORAGE, LOADING AND UNLOADING STABILIZED WITH 3" MIN. THICKNESS GRANULAR MATERIAL (GRAVEL OR RECYCLED CONCRETE)
CONSTRUCTION SITE ACCESS
VTC AT CONSTRUCTION ENTRANCE SEE DETAIL 24
PAVED AREA

PLAN
SCALE: N.T.S.

STABILIZED STAGING AREA INSTALLATION NOTES

1. SEE PLAN VIEW FOR GENERAL LOCATION OF STAGING AREA. CONTRACTOR MAY MODIFY LOCATION AND SIZE OF STABILIZED STAGING AREA WITH SEMSWA APPROVAL.
2. STABILIZED STAGING AREA SHALL BE LARGE ENOUGH TO FULLY CONTAIN PARKING, STORAGE, AND UNLOADING AND LOADING OPERATIONS.
3. IF REQUIRED BY SEMSWA, SITE ACCESS ROADS SHALL BE STABILIZED IN THE SAME MANNER AS THE STAGING AREA.
4. STAGING AREA SHALL BE STABILIZED PRIOR TO ANY OTHER OPERATIONS ON THE SITE.
5. THE STABILIZED STAGING AREA SHALL CONSIST OF A MINIMUM OF 3" OF GRANULAR MATERIAL (GRAVEL OR RECYCLED CONCRETE).

STABILIZED STAGING AREA MAINTENANCE NOTES

1. THE GESC MANAGER SHALL INSPECT THE STABILIZED STAGING AREA WEEKLY, DURING AND AFTER ANY STORM EVENT AND MAKE REPAIRS OR CLEAN OUT UPSTREAM SEDIMENT AS NECESSARY.
2. GESC MANAGER SHALL PROVIDE ADDITIONAL THICKNESS OF GRANULAR MATERIAL IF ANY RUTTING OCCURS OR UNDERLYING SUBGRADE BECOMES EXPOSED.
3. STABILIZED STAGING AREA SHALL BE ENLARGED IF NECESSARY TO CONTAIN PARKING, STORAGE, AND UNLOADING AND LOADING OPERATIONS.
4. ANY ACCUMULATED DIRT OR MUD SHALL BE REMOVED FROM THE SURFACE OF THE STABILIZED STAGING AREA.
5. THE STABILIZED STAGING AREA SHALL BE REMOVED AT THE END OF CONSTRUCTION. THE GRANULAR MATERIAL SHALL BE REMOVED OR, IF APPROVED BY SEMSWA, USED ON SITE, AND THE AREA TOPSOILED, DRILL SEEDED AND CRIMP MULCHED OR OTHERWISE STABILIZED.

SSA STABILIZED STAGING AREA (19)

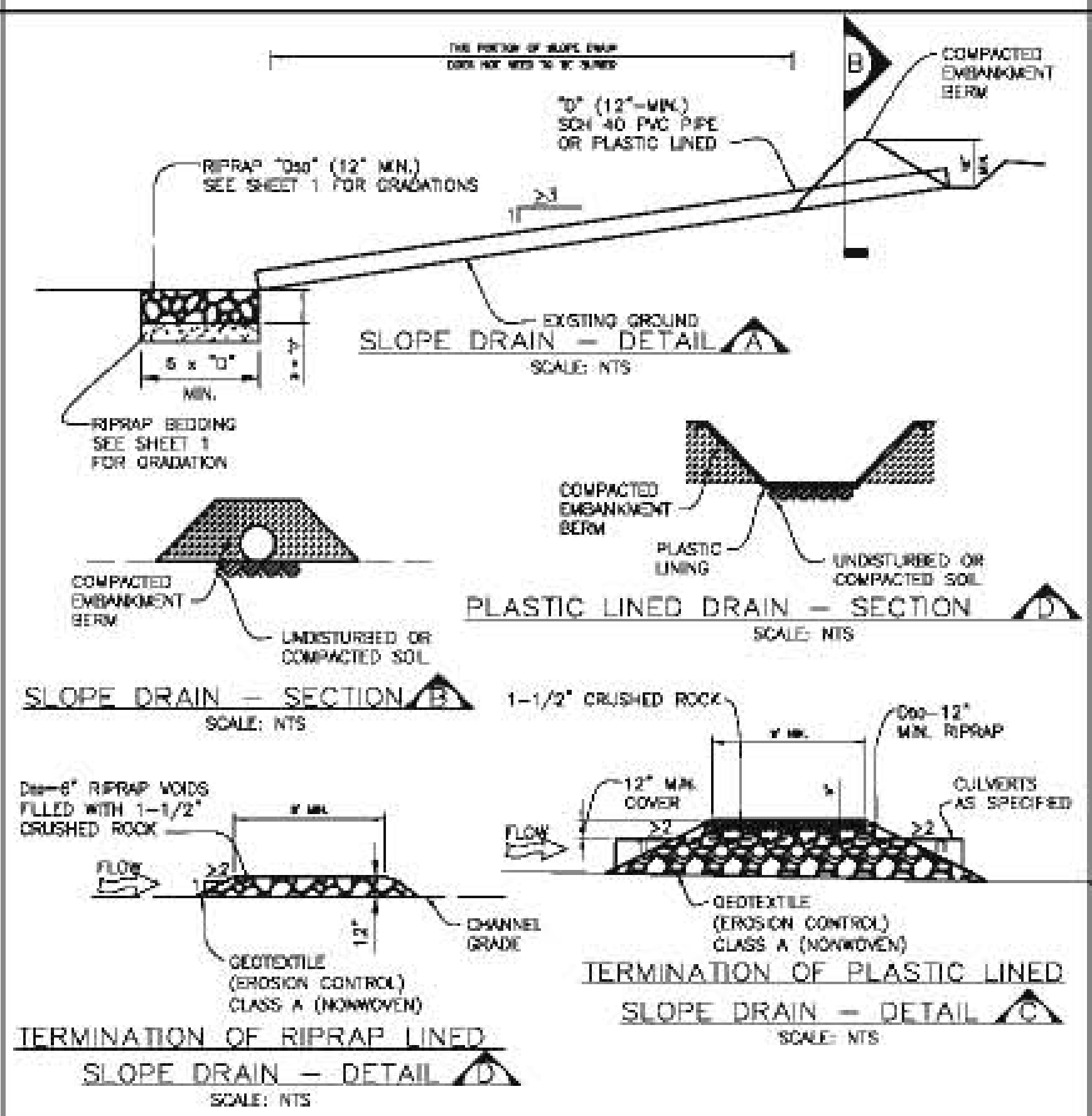
THIS PORTION OF SLOPE DRAIN DOES NOT NEED TO BE BURIED
B
COMPACTED EMBANKMENT BERM
"D" (12"-MIN.) SCH 40 PVC PIPE OR PLASTIC LINED
RIPRAP "D₅₀" (12" MIN.) SEE SHEET 1 FOR GRADATIONS
EXISTING GROUND
SLOPE DRAIN - DETAIL A
SCALE: NTS
RIPRAP BEDDING SEE SHEET 1 FOR GRADATION
COMPACTED EMBANKMENT BERM
UNDISTURBED OR COMPACTED SOIL
PLASTIC LINING
PLASTIC LINED DRAIN - SECTION D
SCALE: NTS
SLOPE DRAIN - SECTION B
SCALE: NTS
1-1/2" CRUSHED ROCK
D₅₀=6" RIPRAP VOIDS FILLED WITH 1-1/2" CRUSHED ROCK
D₅₀-12" MIN. RIPRAP
12" MIN. COVER
CULVERTS AS SPECIFIED
FLOW
CHANNEL GRADE
GEOTEXTILE (EROSION CONTROL) CLASS A (NONWOVEN)
TERMINATION OF PLASTIC LINED SLOPE DRAIN - DETAIL C
SCALE: NTS
TERMINATION OF RIPRAP LINED SLOPE DRAIN - DETAIL D
SCALE: NTS

SLOPE DRAIN INSTALLATION NOTES

1. SEE PLAN VIEW FOR:
   - LOCATION AND LENGTH OF SLOPE DRAIN.
   - PIPE DIAMETER, "D", AND RIPRAP SIZE, "D_{50}".
2. SLOPE DRAIN DIMENSIONS SHALL BE CONSIDERED MINIMUM DIMENSIONS; CONTRACTOR MAY ELECT TO INSTALL LARGER FACILITIES. ANY DAMAGE TO SLOPE OR SLOPE DRAIN DURING RUNOFF EVENTS SHALL BE THE CONTRACTOR'S RESPONSIBILITY.
3. SLOPE DRAINS INDICATED ON INITIAL GESC PLAN SHALL BE INSTALLED PRIOR TO ANY UPSTREAM LAND-DISTURBING ACTIVITIES.
4. FOR TEMPORARY SLOPE DRAINS, PIPE MAY BE INSTALLED ON TOP OF SLOPE; HOWEVER, 12" MIN. COVER AT TOP OF SLOPE SHALL BE PROVIDED.
5. A RIPRAP PAD SHALL BE PLACED AT THE OUTFALL OF THE SLOPE DRAIN.

SLOPE DRAIN MAINTENANCE NOTES

1. THE GESC MANAGER SHALL INSPECT SLOPE DRAINS WEEKLY, DURING AND AFTER ANY STORM EVENT AND MAKE REPAIRS AS NECESSARY.
2. TEMPORARY SLOPE DRAINS ARE TO REMAIN IN PLACE UNTIL NO LONGER NEEDED, BUT SHALL BE REMOVED PRIOR TO THE END OF CONSTRUCTION. WHEN SLOPE DRAINS ARE REMOVED, THE DISTURBED AREA SHALL BE DRILL SEEDED AND CRIMP MULCHED OR OTHERWISE STABILIZED IN A MANNER APPROVED BY SEMSWA.

TSD TEMPORARY SLOPE DRAIN (21)

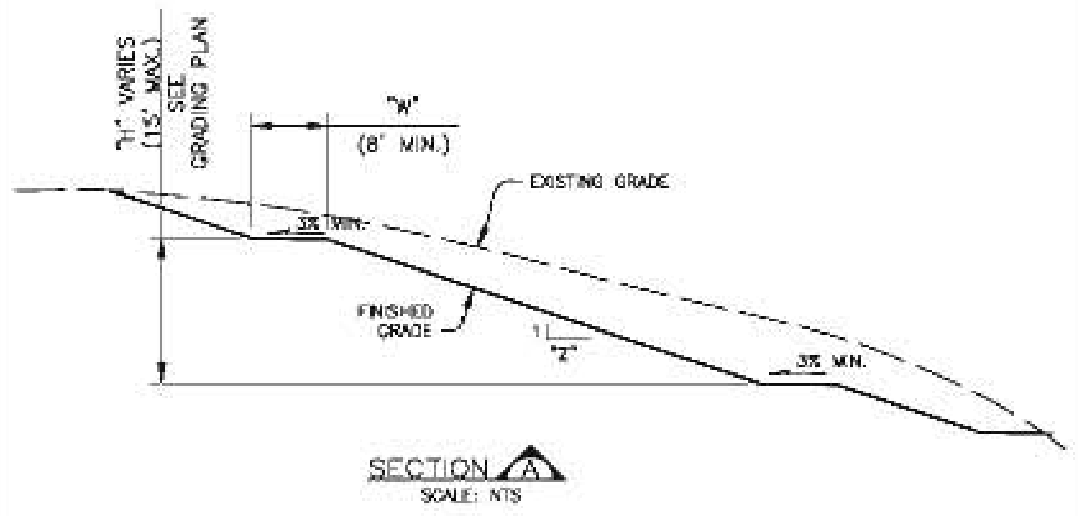
"H" VARIES (15' MAX.)
SITE GRADING PLAN
"W" (8' MIN.)
EXISTING GRADE
FINISHED GRADE
"Z"
SECTION A
SCALE: NTS

TERRACING INSTALLATION NOTES

1. SEE PLAN VIEW FOR:
   - WIDTH, "W", AND SLOPE, "Z".
2. TERRACING IS NOT REQUIRED FOR SLOPES OF 4 TO 1 OR FLATTER.
3. EARTH (VEGETATED) SLOPES STEEPER THAN 3 TO 1 ARE NOT ALLOWED ON THE SITE.

TERRACING MAINTENANCE NOTES

1. THE GESC MANAGER SHALL INSPECT THE SURFACE ROUGHENING WEEKLY, DURING AND AFTER ANY STORM EVENT AND MAKE REPAIRS OR CLEAN OUT UPSTREAM SEDIMENT AS NECESSARY.
2. ANY RILL EROSION OCCURRING ON SLOPES SHALL BE REPAIRED AND RESEEDED AND MULCHED IN ACCORDANCE WITH DETAIL 17.

TER TERRACING (23)

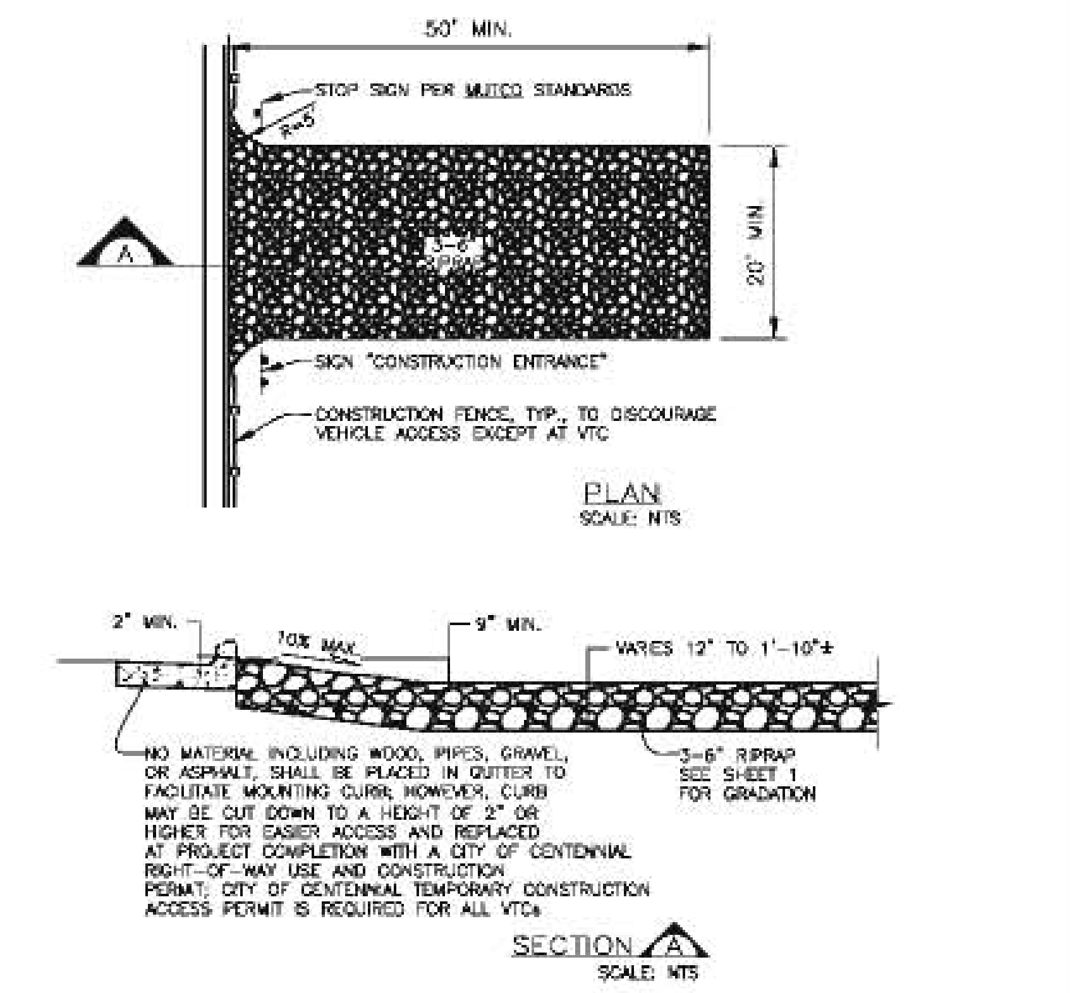
50' MIN.
STOP SIGN PER MUTCD STANDARDS
A
20' MIN.
SIGN "CONSTRUCTION ENTRANCE"
CONSTRUCTION FENCE, TYP., TO DISCOURAGE VEHICLE ACCESS EXCEPT AT VTC
PLAN
SCALE: NTS
2" MIN.
10% MAX.
9" MIN.
VARIES 12" TO 1'-10"±
NO MATERIAL INCLUDING WOOD, PIPES, GRAVEL, OR ASPHALT, SHALL BE PLACED IN GUTTER TO FACILITATE MOUNTING CURB; HOWEVER, CURB MAY BE CUT DOWN TO A HEIGHT OF 2" OR HIGHER FOR EASIER ACCESS AND REPLACED AT PROJECT COMPLETION WITH A CITY OF CENTENNIAL RIGHT-OF-WAY USE AND CONSTRUCTION PERMIT; CITY OF CENTENNIAL TEMPORARY CONSTRUCTION ACCESS PERMIT IS REQUIRED FOR ALL VTCs
3-6" RIPRAP SEE SHEET 1 FOR GRADATION
SECTION A
SCALE: NTS

VEHICLE TRACKING CONTROL INSTALLATION NOTES

1. VEHICLE TRACKING CONTROL PADS SHALL BE INSTALLED AT EVERY ACCESS POINT TO SITE.
2. VEHICLE TRACKING CONTROL PADS SHALL CONSIST OF HARD, DENSE, DURABLE STONE, ANGULAR IN SHAPE AND RESISTANT TO WEATHERING. ROUNDED STONE OR BOULDERS WILL NOT BE ACCEPTABLE. THE STONES SHALL BE 3" WITH A MAXIMUM SIZE OF 6". THE STONE SHALL HAVE A SPECIFIC GRAVITY OF AT LEAST 2.6 CONTROL OF GRADATION WILL BE BY VISUAL INSPECTIONS.
3. ANY CRACKED OR DAMAGED CURB AND GUTTER AND SIDEWALK SHALL BE REPLACED BY PERMITTEE.
4. A SEMSWA TEMPORARY CONSTRUCTION ACCESS PERMIT IS REQUIRED FOR EACH ACCESS PERMIT.
5. A STOP SIGN INSTALLED IN ACCORDANCE WITH THE MANUAL ON UNIFORM TRAFFIC CONTROL DEVICES (MUTCD), AS AMENDED, SHALL BE INSTALLED FOR EXITING TRAFFIC AT THE VTC.

VEHICLE TRACKING CONTROL MAINTENANCE NOTES

1. GESC MANAGER SHALL INSPECT VEHICLE TRACKING CONTROL DAILY. GRAVEL SURFACE SHALL BE CLEAN AND LOOSE ENOUGH TO RUT SLIGHTLY UNDER WHEEL LOADS AND CAUSE LOOSE GRAVEL TO DISLODGE MUD FROM TIRES. WHEN GRAVEL BECOMES COMPACTED OR FILLED WITH SEDIMENT SO THAT THE EFFECTIVENESS OF THE PAD IS DIMINISHED, CONTRACTOR SHALL RIP, TURN OVER, OR OTHERWISE LOOSEN GRAVEL, PLACE ADDITIONAL NEW GRAVEL, OR REPLACE WITH NEW GRAVEL AS NECESSARY TO RESTORE EFFECTIVENESS.
2. VEHICLE TRACKING CONTROL SHALL BE REMOVED AT THE END OF CONSTRUCTION, THE GRAVEL MATERIAL REMOVED OR, IF APPROVED BY SEMSWA, USED ON SITE, AND THE AREA TOPSOILED, DRILL SEEDED AND CRIMP MULCHED OR OTHERWISE STABILIZED.

VTC VEHICLE TRACKING CONTROL (24)

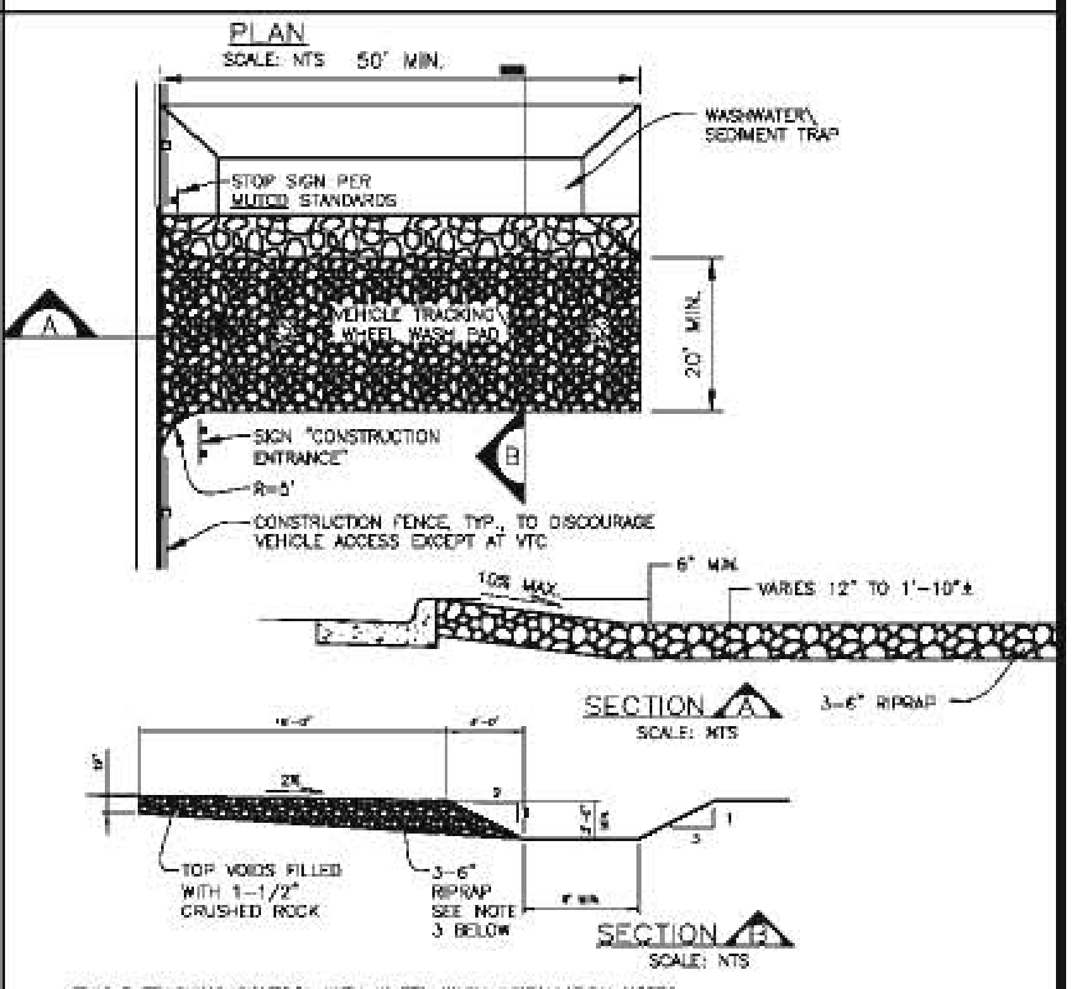
PLAN
SCALE: NTS
50' MIN.
WASHWATER\ SEDIMENT TRAP
STOP SIGN PER MUTCD STANDARDS
A
VEHICLE TRACKING WHEEL WASH PAD
20' MIN.
B
SIGN "CONSTRUCTION ENTRANCE"
R=5'
CONSTRUCTION FENCE, TYP., TO DISCOURAGE VEHICLE ACCESS EXCEPT AT VTC
6" MIN.
10% MAX.
VARIES 12" TO 1'-10"±
SECTION A
SCALE: NTS
3-6" RIPRAP
TOP VOIDS FILLED WITH 1-1/2" CRUSHED ROCK
3-6" RIPRAP SEE NOTE 3 BELOW
SECTION B
SCALE: NTS

VEHICLE TRACKING CONTROL WITH WHEEL WASH INSTALLATION NOTES

1. ALTHOUGH NOT NORMALLY USED, THE COUNTY RESERVES THE RIGHT TO REQUIRE VEHICLE TRACKING CONTROL WITH WHEEL WASH FACILITIES AT SITES WHERE TRACKING ONTO PAVED AREAS BECOMES A SIGNIFICANT PROBLEM.
2. IF VEHICLE TRACKING CONTROL WITH WHEEL WASH FACILITIES ARE REQUIRED, ALL WHEELS ON EVERY VEHICLE LEAVING THE SITE SHALL BE CLEANED OF MUD USING A PRESSURE-WASHER. THE CONTRACTOR SHALL BE RESPONSIBLE FOR OBTAINING A WATER SOURCE.
3. VEHICLE TRACKING CONTROL PADS SHALL CONSIST OF HARD, DENSE, DURABLE STONE, ANGULAR IN SHAPE AND RESISTANT TO WEATHERING. ROUNDED STONE OR BOULDERS WILL NOT BE ACCEPTABLE. THE STONES SHALL BE 3" WITH A MAXIMUM SIZE OF 6". THE STONE SHALL HAVE A SPECIFIC GRAVITY OF AT LEAST 2.6. CONTROL OF GRADATION WILL BE BY VISUAL INSPECTIONS.
4. ANY CRACKED OR DAMAGED CURB AND GUTTER AND SIDEWALK SHALL BE REPLACED BY CONTRACTOR.
5. A STOP SIGN INSTALLED IN ACCORDANCE WITH THE MANUAL ON UNIFORM TRAFFIC CONTROL DEVICES (MUTCD), AS AMENDED, SHALL BE INSTALLED FOR EXITING TRAFFIC AT THE VTC.

VEHICLE TRACKING CONTROL WITH WHEEL WASH MAINTENANCE NOTES

1. GESC MANAGER SHALL INSPECT VEHICLE TRACKING CONTROL WITH WHEEL WASH FACILITIES DAILY. ACCUMULATED SEDIMENTS SHALL BE REMOVED FROM PAD SURFACE.
2. ACCUMULATED SEDIMENT IN THE WASHWATER/SEDIMENT TRAP SHALL BE REMOVED WHEN THE SEDIMENT DEPTH REACHES AN AVERAGE OF 12-INCHES.
3. VEHICLE TRACKING CONTROL WITH WHEEL WASH FACILITY SHALL BE REMOVED AT THE END OF CONSTRUCTION. THE RIPRAP MATERIAL REMOVED OR, IF APPROVED BY THE COUNTY, USED ON SITE, AND THE AREA TOPSOILED, DRILL SEEDED AND CRIMP MULCHED OR OTHERWISE STABILIZED.

WW VTC WITH WHEEL WASH (25)

UTILITY NOTIFICATION CENTER
OF COLORADO
CALL BEFORE YOU DIG
811
Call 2 days prior to any digging, grading or excavating for the marking of underground member utilities

SOUTHEAST METRO STORMWATER AUTHORITY
76 INVERNESS DRIVE EAST
CENTENNIAL COLORADO
80112-5106
(303) 858-8844 - INSPECTION DIVISION
(303) 267-9552

Southeast Metro Stormwater Authority

GRADING EROSION AND SEDIMENT CONTROL
STANDARD NOTES AND DETAILS

GESC
SHEET
3 OF 4

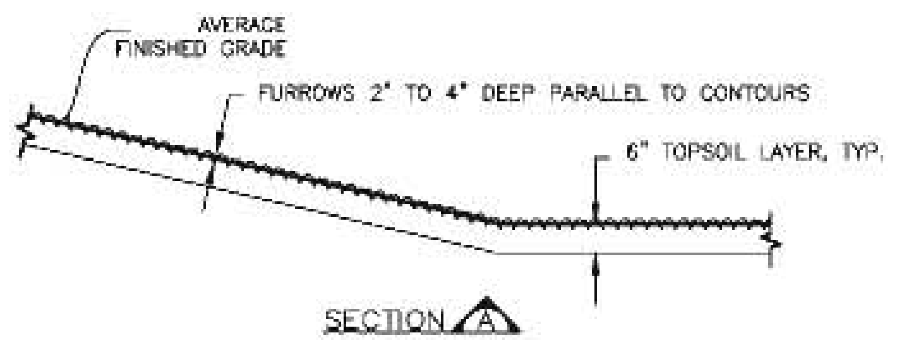
AVERAGE FINISHED GRADE
FURROWS 2" TO 4" DEEP PARALLEL TO CONTOURS
6" TOPSOIL LAYER, TYP.

SECTION A
SCALE: NTS

SURFACE ROUGHENING INSTALLATION NOTES

1. SURFACE ROUGHENING SHALL BE PROVIDED ON ALL FINISHED GRADES (SLOPES AND "FLAT" AREAS) WITHIN 2 DAYS OF COMPLETION OF FINISHED GRADE (FOR AREAS NOT RECEIVING TOPSOIL) OR WITHIN 2 DAYS OF TOPSOIL PLACEMENT.
2. AREAS WHERE BUILDING FOUNDATIONS, PAVEMENT, OR SOD IS TO BE PLACED WITHIN 7-DAYS OF FINISHED GRADING DO NOT NEED TO BE SURFACE ROUGHENED.
3. DISTURBED SURFACES SHALL BE ROUGHENED USING RIPPING OR TILLING EQUIPMENT ON THE CONTOUR OR TRACKING UP AND DOWN A SLOPE USING EQUIPMENT TREADS.

SURFACE ROUGHENING MAINTENANCE NOTES

1. THE GESC MANAGER SHALL INSPECT THE SURFACE ROUGHENING WEEKLY, DURING AND AFTER ANY STORM EVENT AND MAKE REPAIRS OR CLEAN OUT UPSTREAM SEDIMENT AS NECESSARY.
2. VEHICLES AND EQUIPMENT SHALL GENERALLY BE CONFINED TO ACCESS DRIVES AND SHALL NOT BE DRIVEN OVER AREAS THAT HAVE BEEN SURFACE ROUGHENED.
3. IN NON-TURF GRASS FINISHED AREAS, SEEDING AND MULCHING SHALL TAKE PLACE DIRECTLY OVER SURFACE ROUGHENED AREAS WITHOUT FIRST SMOOTHING OUT THE SURFACE.
4. IN AREAS NOT SEEDED AND MULCHED AFTER SURFACE ROUGHENING, SURFACES SHALL BE RE-ROUGHENED AS NECESSARY TO MAINTAIN GROOVE DEPTH AND SMOOTH OVER ANY RILL EROSION.

SR SURFACE ROUGHING 20

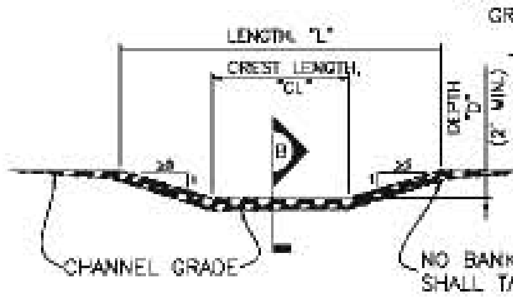
LENGTH, "L"
CREST LENGTH, "CL"
DEPTH "D" (2' MIN.)
B
CHANNEL GRADE
NO BANK EXCAVATION SHALL TAKE PLACE

FORD CROSSING A
SCALE: NTS

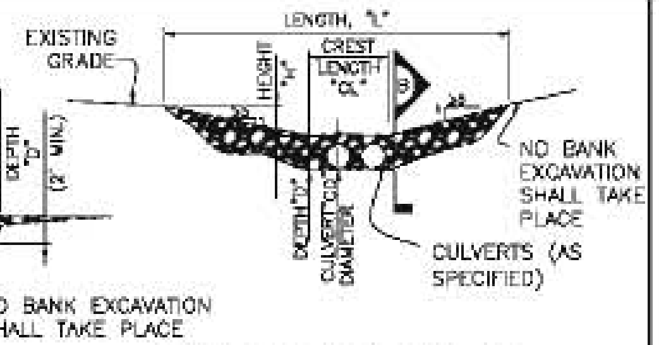
EXISTING GRADE
LENGTH, "L"
CREST LENGTH "CL"
HEIGHT "H"
DEPTH "D"
CULVERT "CD" DIAMETER
B
NO BANK EXCAVATION SHALL TAKE PLACE
CULVERTS (AS SPECIFIED)

CULVERT CROSSING A
SCALE: NTS

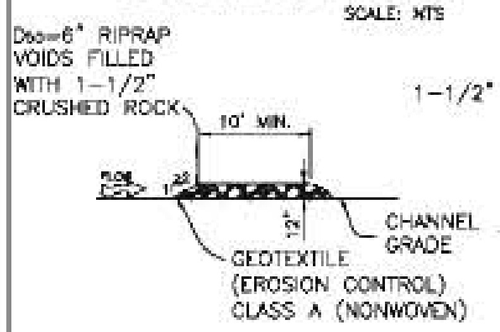
D50=6" RIPRAP VOIDS FILLED WITH 1-1/2" CRUSHED ROCK
10' MIN.
FLOW
12"
CHANNEL GRADE
GEOTEXTILE (EROSION CONTROL) CLASS A (NONWOVEN)

FORD CROSSING B
SECTION SCALE: NTS

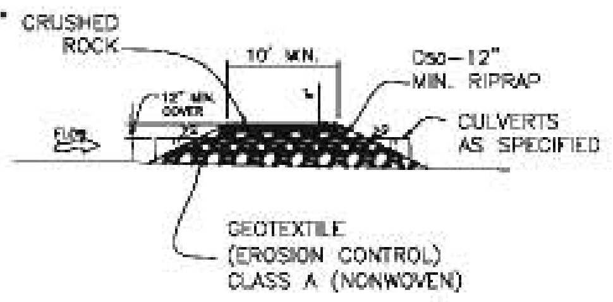
1-1/2" CRUSHED ROCK
10' MIN.
D50-12" MIN. RIPRAP
12" MIN. COVER
FLOW
CULVERTS AS SPECIFIED
GEOTEXTILE (EROSION CONTROL) CLASS A (NONWOVEN)

SECTION CROSSING B
SECTION SCALE: NTS

TEMPORARY STREAM CROSSING INSTALLATION NOTES

1. SEE PLAN VIEW FOR:
   - LOCATIONS OF TEMPORARY STREAM CROSSING.
   - STREAM CROSSING TYPE (FORD OR CULVERT).
   - FOR FORD CROSSING: LENGTH, "L", CREST LENGTH, "CL", AND DEPTH, "D".
   - FOR CULVERT CROSSING : LENGTH, "L", CREST LENGTH, "CL", CROSSING HEIGHT, "H", DEPTH, "D", CULVERT DIAMETER, "CD", AND NUMBER, TYPE AND CLASS OR GAUGE OF CULVERTS.
2. TEMPORARY STREAM CROSSING DIMENSIONS, D50, AND NUMBER OF CULVERTS INDICATED (FOR CULVERT CROSSING) SHALL BE CONSIDERED MINIMUM DIMENSIONS; ENGINEER MAY ELECT TO INSTALL LARGER FACILITIES. ANY DAMAGE TO STREAM CROSSING OR EXISTING STREAM CHANNEL DURING BASEFLOW OR FLOOD EVENTS SHALL BE THE CONTRACTOR'S RESPONSIBILITY.
3. SEE SHEET 1 FOR RIPRAP AND 1-1/2" CRUSHED ROCK GRADATIONS.
4. FOR A TEMPORARY STREAM CROSSING THAT WILL CARRY LOADS, THE TEMPORARY STREAM CROSSING MUST BE DESIGNED BY THE DESIGN ENGINEER.

TEMPORARY STREAM CROSSING MAINTENANCE NOTES

1. THE GESC MANAGER SHALL INSPECT STREAM CROSSINGS WEEKLY, DURING AND AFTER ANY STORM EVENT AND MAKE REPAIRS OR CLEAN OUT UPSTREAM SEDIMENT AS NECESSARY.
2. SEDIMENT ACCUMULATED UPSTREAM OF STREAM CROSSINGS SHALL BE REMOVED WHEN THE SEDIMENT DEPTH UPSTREAM OF CROSSING IS WITHIN 6-INCHES OF THE CREST (FORD CROSSING) OR GREATER THAN AN AVERAGE DEPTH OF 12-INCHES (CULVERT CROSSING).
3. STREAM CROSSINGS ARE TO REMAIN IN PLACE UNTIL NO LONGER NEEDED, BUT SHALL BE REMOVED PRIOR TO THE END OF CONSTRUCTION.
4. WHEN STREAM CROSSINGS ARE REMOVED, THE DISTURBED AREA SHALL BE DRILL SEEDED AND CRIMP MULCHED AND COVERED WITH EROSION CONTROL BLANKET OR OTHERWISE STABILIZED IN A MANNER APPROVED BY THE SEMSWA.

TSC TEMPORARY STREAM CROSSING 22

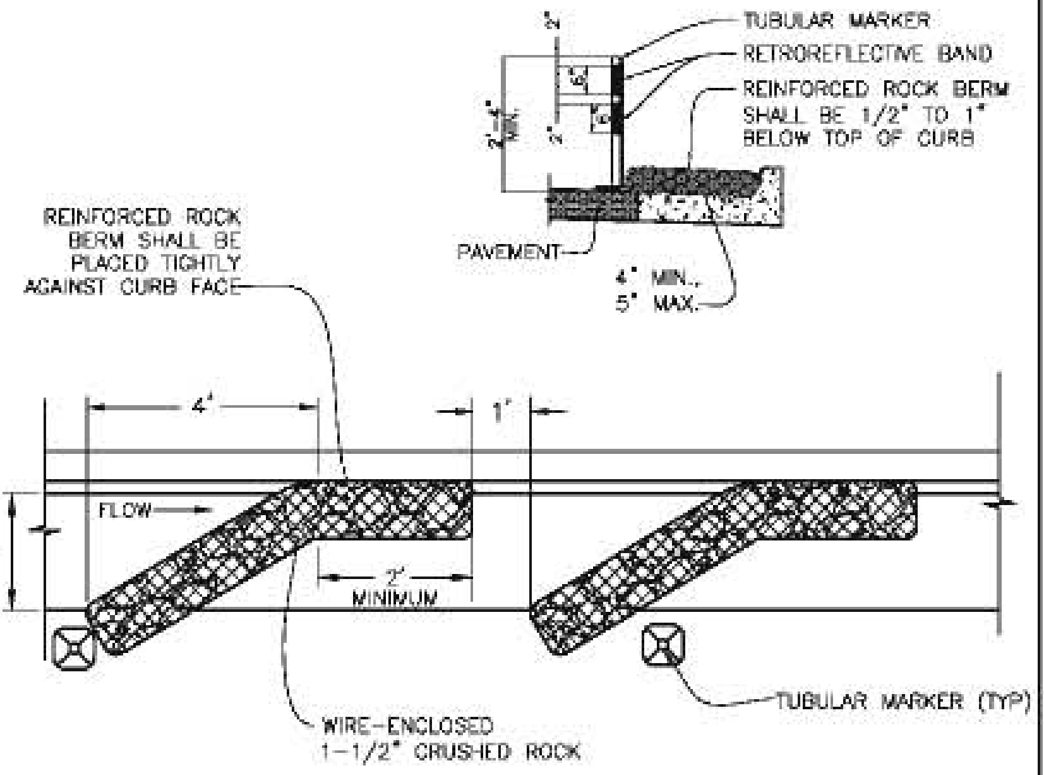
TUBULAR MARKER
RETROREFLECTIVE BAND
REINFORCED ROCK BERM SHALL BE 1/2" TO 1" BELOW TOP OF CURB
PAVEMENT
4" MIN., 5" MAX.
REINFORCED ROCK BERM SHALL BE PLACED TIGHTLY AGAINST CURB FACE
4'
1'
FLOW
2'
2' MINIMUM
TUBULAR MARKER (TYP)
WIRE-ENCLOSED 1-1/2" CRUSHED ROCK

CURB SOCK ON CONTINUOUS GRADE
SCALE: NTS

CURB SOCK INSTALLATION NOTES

1. ADDITIONAL CURB SOCKS MAY BE REQUIRED AS DIRECTED BY SEMSWA.
2. CURB SOCKS IN STREETS SHALL BE INSTALLED WITHIN 48-HOURS OF POURING CURBS. CURB SOCKS (AFTER PAVEMENT) SHALL BE INSTALLED WITHIN 48 HOURS AFTER PAVING IS PLACED.
3. CRUSHED ROCK SHALL BE FRACTURED FACE (ALL SIDES) AND SHALL COMPLY WITH GRADATION SHOWN ON SHEET 1 (1-1/2" MINUS).
4. WIRE MESH SHALL BE FABRICATED OF 10 GAUGE WIRE TWISTED INTO A MESH WITH A MAXIMUM OPENING OF 1.0 INCH (COMMONLY TERMED "CHICKEN WIRE"). ROLL WIDTH SHALL BE 48-INCHES.
5. WIRE MESH SHALL BE SECURED USING "HOG RINGS" OR WIRE TIES AT 6-INCH CENTERS ALONG ALL JOINTS AND AT 2-INCH CENTERS ON ENDS OF BERM.
6. REINFORCED ROCK BERM SHALL BE CONSTRUCTED IN ONE PIECE OR SHALL BE CONSTRUCTED USING JOINT DETAIL.
7. TUBULAR MARKERS SHALL MEET REQUIREMENTS OF MANUAL ON UNIFORM TRAFFIC CONTROL DEVICES (MUTCD) AS AMENDED.
8. THE TOP OF REINFORCED ROCK BERM SHALL BE 1/2"-1" BELOW TOP OF CURB.

CURB SOCK MAINTENANCE NOTES

1. THE GESC MANAGER SHALL INSPECT CURB PROTECTION WEEKLY, DURING AND AFTER ANY STORM EVENT AND MAKE REPAIRS OR CLEAN OUT AS NECESSARY. MORE FREQUENT INSPECTIONS AND REPAIRS SHALL BE REQUIRED DURING WINTER CONDITIONS DUE TO FREEZE/THAW PROBLEMS AND PLOWING OPERATIONS.
2. SEDIMENT ACCUMULATED UPSTREAM OF CURB SOCK SHALL BE REMOVED WHEN THE SEDIMENT DEPTH UPSTREAM OF ROCK BERM IS WITHIN 2-1/2 INCHES OF THE CREST OR AS REQUIRED BY SEMSWA.
3. CURB PROTECTION IS TO REMAIN IN PLACE UNTIL THE UPSTREAM DISTURBED AREA IS STABILIZED AND GRASS COVER IS APPROVED, UNLESS SEMSWA APPROVES EARLIER REMOVAL OF CURB PROTECTION IN STREETS.

CS CURB SOCK 26

UTILITY NOTIFICATION CENTER
OF COLORADO
CALL BEFORE YOU DIG
811
Call 2 days prior to any digging, grading or excavating for the marking of underground member utilities

SOUTHEAST METRO STORMWATER AUTHORITY
76 INVERNESS DRIVE EAST
CENTENNIAL COLORADO
80112-5106
(303) 858-8844 - INSPECTION DIVISION
(303) 267-9552

GRADING EROSION AND SEDIMENT CONTROL
STANDARD NOTES AND DETAILS

GESC
SHEET
4 OF 4