Claims & Export
Compliance Manager
Street Address
88 - 11th Ave NE
Minneapolis MN 55413
Direct Dial 612 623 6617
Fax 612 623 6944
sgregory@graco.com

February 7, 2011

Via E-mail: publiccomments@bis.doc.gov

Mr. Timothy Mooney
Office of Exporter Services
Regulatory Policy Division
Bureau of Industry and Security
Department of Commerce
1401 Constitution Avenue, N.W., Room 2705
Washington, D.C. 20230

Re: Notice of Inquiry—CCL
Request for Comments on the Availability of Items on the CCL

Dear Mr. Mooney:

On behalf of Graco Inc., I am submitting these comments on the availability of items on the Commerce Control List (CCL) in response to the Bureau of Industry and Security's request for public comments for revising the descriptions of items and foreign availability on the CCL. These comments identify the foreign availability of pumps classified as Export Control Classification Number (ECCN) 2B350 on the CCL outside of the U.S. and the group of countries identified in the Notice of Inquiry published in the December 9, 2010, Federal Register, Vol. 75, No. 236, pp. 76664-76666.

Founded in 1926, Graco is a world leader in fluid handling systems and components. Graco products move, measure, control dispense, and apply a wide range of fluids and viscous materials used in vehicle lubrication, commercial and industrial settings. The Company's operations are based in Minneapolis, Minnesota.

Graco's Husky diaphragm pumps are the subject of this comment letter. Husky diaphragm pump models 205, 515, 1040, 1050, 1590 and 2150 are air-operated double diaphragm pumps for low to high viscosity fluids of varying connection sizes with maximum flow rate over 0.6 cubic meters per hour and pump wetted parts made of fluoropolymers classified on the CCL under ECCN 2B350i. More detailed descriptions of our different pump models are reflected in the enclosed Process Equipment Catalog at pp. 2-5, 7-8, 12-14, 18-20, 25-27, and 31-33. Graco

regularly obtains export or re-export licenses for those of our pumps classified as ECCN 2B350i.

In our view, pumps that equal or exceed the parameters of 2B350i are those manufactured by Price Pumps PVT Ltd in India, Shanghai Rudi Fluid Conveyor Co., Ltd. in China, and Zhejiang Xiandai Pump Co., Ltd. in China. To our knowledge, these pumps are available in sufficient quantity. Air-operated double diaphragm pumps are of a commodity nature, are widely available and have been for some time. The pumps controlled under 2B350i require no special technical expertise to design and manufacture compared with similar pumps made of other plastics not in 2B350i. The relatively recent availability of these lower demand special material pumps as set forth below reflects increasing demand for these controlled pumps (as compared to the non-controlled material pumps).

There are three basic requirements to be met for the pumps to be controlled under 2B350i: (1) the pumps are diaphragm type pumps - all of the cited pumps are of this design; (2) the pumps are of the specified flow rate - all of the pumps cited have flow rates nearly identical to the similarly sized Graco pumps which are understood to be controlled under the current regulations; and (3) all of the wetted parts of the pumps must be made from the enumerated list of materials - the wetted materials of the pumps cited are the same fluoropolymers as the Graco controlled pumps, namely PVDF and PTFE (sometimes referred to by the trademarks Teflon and Kynar).

Evidence of foreign availability is summarized below:

Price Pumps Pvt. Ltd. ("Price Pumps")

8, Hind Service Industrial Estate, Gr Floor,
San Gyaeshwar Road, Shivaji Park,
Mumbai 400 028, India

Websites:

"LEADING MANUFACTURER OF AIR-OPERATED DOUBLE-DIAPHRGAM PUMPS" from Price Pumps home page at:
http://www.pricepumps.co.in/pricepumps/default.htm

Price Pumps contact us page at:
http://www.pricepumps.co.in/pricepumps/contactus/default.htm

"Price Pumps Pvt. Ltd. is now a CE certified company." Copy of CE Certificate at:
http://www.pricepumps.co.in/pricepumps/news/default.htm
http://www.pricepumps.co.in/pricepumps/news/pdfs/CE-Certificate.pdf

Price Pumps product catalog at:
http://www.pricepumps.co.in/pricepumps/pdfs/price-catalog.pdf

Price Pumps product pages at:
http://www.pricepumps.co.in/pricepumps/products/default.htm
http://www.pricepumps.co.in/pricepumps/products/materials.htm

Price Pumps diaphragm pump descriptions at:
AOD 15 PVDF
http://www.pricepumps.co.in/pricepumps/products/poly-fluoride-15.htm
http://www.pricepumps.co.in/pricepumps/products/pdfs/15mm-pvdf.pdf
AOD 30 PVDF
http://www.pricepumps.co.in/pricepumps/products/poly-fluoride-30.htm
http://www.pricepumps.co.in/pricepumps/products/pdfs/25mm-pvdf.pdf
AOD 40 PVDF and AOD 400 PVDF
http://www.pricepumps.co.in/pricepumps/products/poly-fluoride-40.htm
http://www.pricepumps.co.in/pricepumps/products/pdfs/40mm-pvdf-bolted.pdf
http://www.pricepumps.co.in/pricepumps/products/pdfs/40mm-pvdf-bolted.pdf
AOD 55 PVDF and AOD 500 PVDF
http://www.pricepumps.co.in/pricepumps/products/poly-fluoride-50.htm
http://www.pricepumps.co.in/pricepumps/products/pdfs/50mm-pvdf.pdf
http://www.pricepumps.co.in/pricepumps/products/pdfs/50mm-pvdf-bolted.pdf
AOD 80 PVDF
http://www.pricepumps.co.in/pricepumps/products/poly-fluoride-80.htm
http://www.pricepumps.co.in/pricepumps/products/pdfs/manual.pdf

Shanghai Rudi Fluid Conveyor Co., Ltd. ("Rudi")

1428 Jinqian Road
Jinhui Town
Shanghai China

Websites:

"Rudi pump is a professional manufacturer of air operated diaphragm pump. Our RW series air operated diaphragm pumps adopt three-way air pilot valve for true no-sticking and lube-free operation. The structure and performance is similar with some world famous brand.

RW series air operated diaphragm pumps use compressed air as the power source. It can convey corrosive, volatile, flammable, poisonous liquid or fluids with particles and high viscosity liquid etc. The wetted parts and diaphragm can be choose according to different fluid media.

Pump material:
Wetted parts: PP, PVDF, Acetal, Aluminum alloy, Cast iron, SS304 / 316 etc.
Diaphragm: Teflon, Santoprene, Viton, EPDM, Hytrel, Buna-N, Neoprene etc."

Above from Rudi home page at:
http://www.river-wave.cn/en/about.asp

Rudi contact us page at:
http://www.river-wave.cn/en/contact.asp

Rudi product page at:
http://www.river-wave.cn/en/products.asp

Rudi diaphragm pump descriptions at:
RW06
http://www.river-wave.cn/en/products_view.asp?id=7
RW10
http://www.river-wave.cn/en/products_view.asp?id=12
RW15
http://www.river-wave.cn/en/products_view.asp?id=10
RW25
http://www.river-wave.cn/en/products_view.asp?id=15
RW40
http://www.river-wave.cn/en/products_view.asp?id=14
RW50
http://www.river-wave.cn/en/products_view.asp?id=14
RW80
http://www.river-wave.cn/en/products_view.asp?id=16

The Rudi pump descriptions in the above web pages show that the pumps are within the materials of construction of the pumps controlled by 2B350. Pump sizes and flow rates are not given but the manufacturer states "The structure and performance is similar with some world famous brand."

Zhejiang Xiandai Pump Co., Ltd. ("Xiandai Pump")

Dong'ou Industrial Zone
Oubei Town, Yongjia County, Wenzhou
Zhejiang, China (Mainland) Zip: 325102

Websites:

Xiandai Pump home page at:
http://modernpump.en.alibaba.com/

"Welcome to our website, Zhejiang Xiandai Pump Co., Ltd is a main manufacturer of multistage pump in China, have experience over 15 year.
1.Products: vertical multistage pump, horizontal multistage pump, diaphragm pump, submersible pump.
2.Full range test equipment to check pump performance and quality.
3.Pump have CE certificate
4.Have exported pump to more than 30 countries.
5.Strict quality control policy for quality is life for factory.

We sincerely welcome customers worldwide to establish mutually beneficial and strategic long-term business relationships. If you are interested in any of our competitively priced products, please feel free to contact us for further details or any questions you may have. We warmly welcome your inquiries."

Above from Xiandai Pump profile page at:
http://modernpump.en.alibaba.com/aboutus.html#companyprofile

"Welcome to our website. ZHEJIANG XIANDAI PUMP CO., LTD is a leading manufacturer of stainless steel multistage pump and diaphragm pump in China with a history over 15 years. Our factory primarily supply vertical multistage pump, horizontal multistage pump, fire pump and air operated diaphragm pump. We have exported our pumps to more than 30 regions and countries.

Horizontal and vertical multistage pump, all parts that touch with liquid are made of stainless steel, have obtained CE certificate. Diaphragm pump is similar with GRACO pump and adopt three way air pilot valve for true no-sticking and lube-free operation. We are striving to be increasingly competitive through technical excellence, continuous improvement of our pump quality and service, so as to establish long-term relationship with our customers.

We sincerely welcome customers worldwide. And weâ□□d [sic] like to establish mutually beneficial and long-term business relationship with customers. If you are interested in any pump in our company, please feel free to contact us for further details or any questions you may have. We warmly welcome your inquiries."

Above from Xiandai Pump listing at TradeKey.com:
http://www.tradekey.com/profile_view/uid/334717/Zhejiang-Xiandai-Pump-Co-Ltd.htm

Xiandai Pump about us page at:
http://modernpump.en.alibaba.com/aboutus.html

"1.CE certificate for CDL series pump" at:
http://www.xiandaipump.com/indexEn.asp?MenuId=7

GRACO

Process Equipment Catalog

Solutions for Industrial Applications

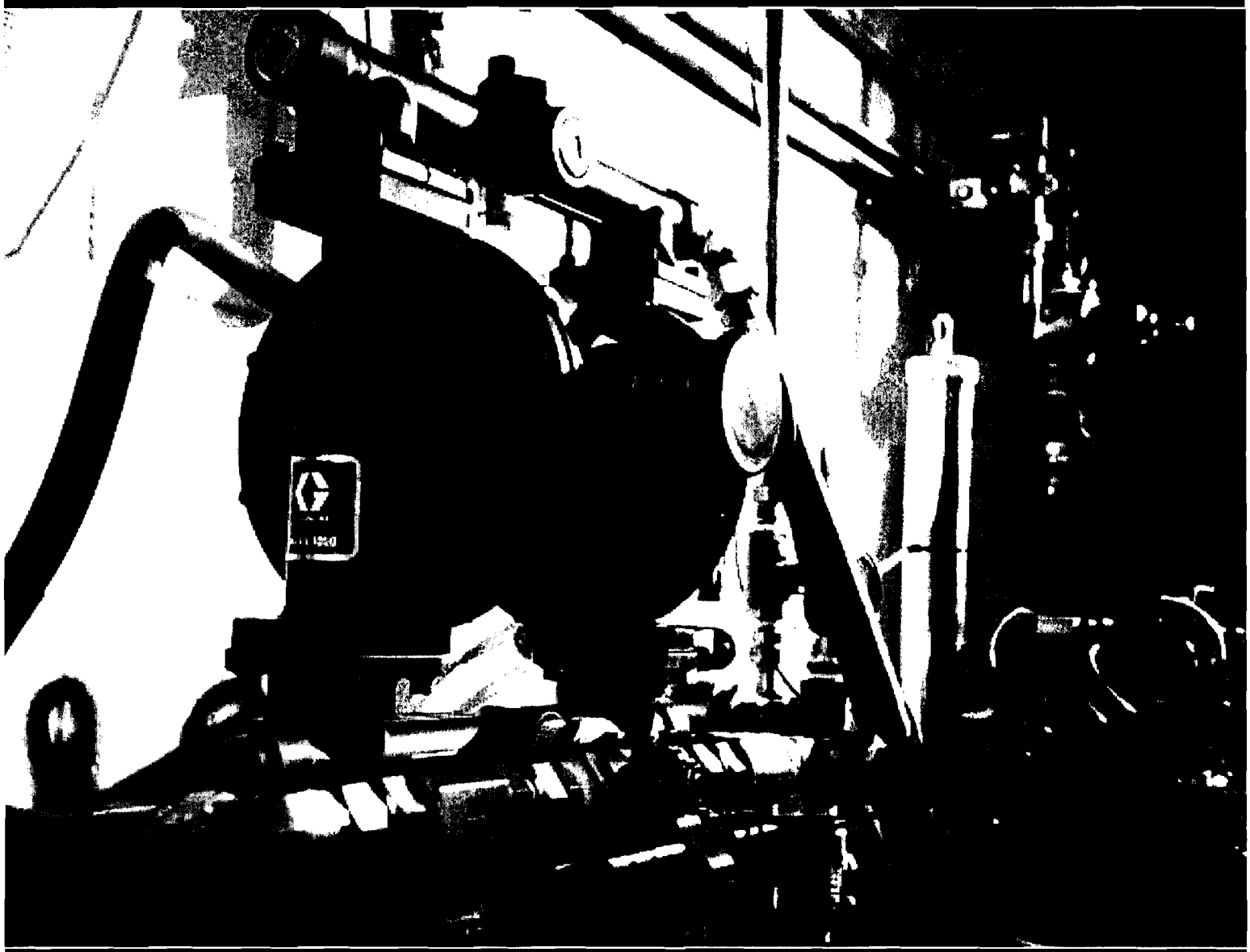

PROVEN QUALITY. LEADING TECHNOLOGY

Table of Contents
Process Equipment Buyer's Guide

Contents

Air-Operated Double Diaphragm Pumps Model Overview 2
Pump Selection Key for Husky AODD Pumps 4
Husky 205 Plastic Pumps 7
Husky 307 Plastic Pumps 9
Husky 515 Plastic Pumps 12
Husky 716 Metal Pumps 15
Husky 1050 Plastic Pumps 18
Husky 1050 Metal Pumps 21
Husky 1590 Plastic Pumps 25
Husky 1590 Metal Pumps 28
Husky 2150 Plastic Pumps 31
Husky 2150 Metal Pumps 34
Husky 3275 Aluminum Pumps 37
Fast-Flo 1:1 39
Hydra-Clean® 40
Husky Transfer Pump Packages 43
CycleFlo and CycleFlo II 45
Surge Suppressors 47
Pump Accessories 48
Piston Pumps for Ink Applications 54

Air-Operated Double Diaphragm Pumps
Model Overview

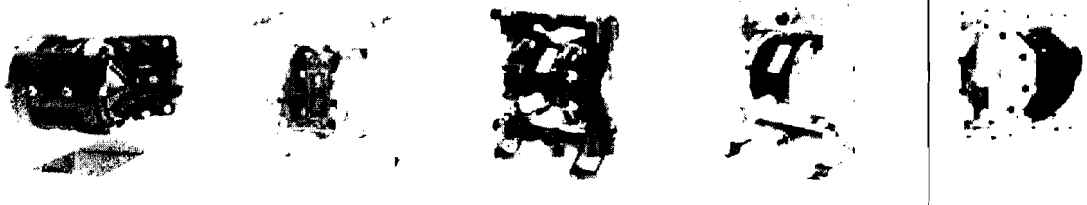

Model	Husky 205 Plastic	Husky 307 Plastic	Husky 515 Plastic	Husky 716 Metal	Husky 1050 Plastic
Connection Size	1/4 in (6.3 mm)	3/8 in (9.4 mm)	1/2 in (12.7 mm) or 3/4 in (19.1 mm)	3/4 in (19.1 mm)	1 in (25.4 mm)
Thread Type	NPT or BSP	NPT or BSP	NPT or BSP	NPT or BSP	ANSI/DIN Flange
Air Valve	Standard and Remote	Standard	Standard and Remote	Standard and Remote	Standard, Smart and Remote
Maximum Flow Rate	5 gpm (19 lpm)	7 gpm (26 lpm)	15 gpm (57 lpm)	16 gpm (61 lpm)	50 gpm (189 lpm)
Maximum Discharge Pressure	100 psi (7.0 bar, 0.7 MPa)	100 psi (7.0 bar, 0.7 MPa)	100 psi (7.0 bar, 0.7 MPa)	100 psi (7.0 bar, 0.7 MPa)	125 psi (8.6 bar. 0.9 MPa)
Materials of Construction Available	Polypropylene, PVDF, Acetal	Polypropylene, Acetal	Polypropylene, PVDF, Acetal	Aluminum, 316 Stainless Steel	Polypropylene, Conductive Poly, PVDF
Center Section Available	Polypropylene	Polypropylene	Polypropylene	Polypropylene	Polypropylene, Conductive Poly
Pump Weight	2.0 lb (0.9 kg) Polypropylene	4.75 lb (2.2 kg) Acetal	6.5 lb (2.9 kg) Polypropylene	8.5 lb (3.9 kg) Aluminum	18 lb (8.2 kg) Polypropylene
	2.5 lb (1.1 kg) Acetal	5.2 lb (2.4 kg) Polypropylene	7.8 lb (3.5 kg) Acetal	18 lb (8.2 kg) Stainless Steel	21 lb (9.5 kg) PVDF
	2.8 lb (1.3 kg) PVDF		8.5 lb (3.9 kg) PVDF		
Maximum Solids	0.06 in (1.5 mm)	0.063 in (1.6 mm)	0.094 in (2.5 mm)	0.094 in (2.5 mm)	.125 in (3.2 mm)

NEW! Husky 1050

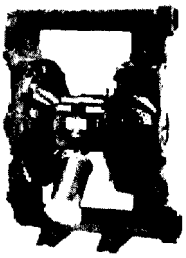
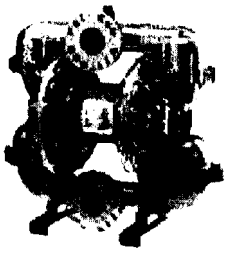

Husky 1050 Metal	Husky 1590 Plastic	Husky 1590 Metal	Husky 2150 Plastic	Husky 2150 Metal	Husky 3275 Metal
1 in (25.4 mm)	1-1/2 in (38.1 mm)	1-1/2 in (38.1 mm)	2 in (50.8 mm)	2 in (50.8 mm)	3 in (76.2 mm)
NPT or BSP	ANSI Flange	NPT or BSP	ANSI Flange	NPT or BSP	DIN/ANSI, NPT and BSP
Standard, Smart and Remote	Standard and Remote	Standard and Remote	Standard and Remote	Standard and Remote	Standard
50 gpm (189 lpm)	100 gpm (379 lpm)	100 gpm (379 lpm)	150 gpm (568 lpm)	150 gpm (568 lpm)	275 gpm (1041 lpm)
125 psi (8.6 bar, 0.9 MPa)	120 psi (8.3 bar, 0.8 MPa)	120 psi (8.3 bar, 0.8 MPa)	120 psi (8.3 bar, 0.8 MPa)	120 psi (8.3 bar, 0.8 MPa)	120 psi (8.3 bar, 0.8 MPa)
Aluminum, 316 Stainless Steel, Hastelloy	Polypropylene, PVDF	Aluminum, 316 Stainless Steel	Polypropylene, PVDF	Aluminum, 316 Stainless Steel, Ductile Iron	Aluminum
Coated Aluminum, Polypropylene, Conductive Poly	Coated Aluminum, 316 Stainless Steel	Coated Aluminum, 316 Stainless Steel	Coated Aluminum, 316 Stainless Steel	Coated Aluminum, 316 Stainless Steel	Coated Aluminum
23 lb (10.4 kg) Aluminum	35 lb (16 kg) Polypropylene	33.5 lb (15.2 kg) Aluminum	49 lb (22 kg) Polypropylene	58 lb (26.3 kg) Aluminum	150 lb (68 kg) Aluminum
36.3 - 41 lb (16.5-18.6 kg) Stainless Steel	49 lb (22 kg) PVDF	85 lb (38.6 kg) Stainless Steel	68 lb (31 kg) PVDF	111 lb (50.3 kg) Stainless Steel	
				130 lb (59 kg) Ductile Iron	
.125 in (3.2 mm)	0.188 in (4.8 mm)	0.188 in (4.8 mm)	0.25 in (6.3 mm)	0.25 in (6.3 mm)	0.375 in (9.4 mm)

1 inch Pump Family

Pump Selection Key
Husky AODD Pumps

Pump Designation

Part numbers are located on ID tag on center section of all Husky diaphragm pumps.

D	X	X	X	X	X
Diaphragm Pump	Pump Size	Wetted Parts	Seats	Balls/ Checks	Diaphragms

PUMP SIZE (AIR MOTOR TYPE AND MATERIAL)

1 = 1/4" (6.35 mm) Standard: polypropylene center section
2 = 1/4" (6.35 mm) Remote: polypropylene center section
3 = 3/8" (9.52 mm) Standard: aluminum center section
5 = 1/2" (12.7 mm) Standard: polypropylene center section
4 = 1/2" (12.7 mm) Remote: polypropylene center section
5 = 3/4" (19.05 mm) Standard: polypropylene center section
4 = 3/4" (19.05 mm) Remote: polypropylene center section
1" (25.4 mm) refer to Husky 1050 Selector Tool, page 5
B = 1-1/2" (38.1 mm) Standard: aluminum center section
C = 1-1/2" (38.1 mm) Remote: aluminum center section
T = 1-1/2" (38.1 mm) Standard: stainless steel center section
U = 1-1/2" (38.1 mm) Remote: stainless steel center section
F = 2" (50.8 mm) Standard: aluminum center section
G = 2" (50.8 mm) Remote: aluminum center section
V = 2" (50.8 mm) Standard: stainless steel center section
W = 2" (50.8 mm) Remote: stainless steel center section
K = 3" (76.2 mm) Standard: aluminum center section

WETTED PARTS

1 = Acetal (npt)
2 = Poly (npt)
3 = Aluminum (npt)
4 = Stainless Steel (npt)
5 = PVDF (npt)
6 = Ductile Iron (npt)

A = Acetal * (bsp)
B = Poly * (bsp)
C = Aluminum (bsp)
D = Stainless Steel (bsp)
E = PVDF (bsp)
F = Ductile Iron (bsp)

H = 2 npt Alum Extended
G = 2 bsp Alum Extended

SEATS

2 = Acetal
3 = Stainless Steel
4 = Hardened SST
5 = TPE
6 = Santoprene
7 = Buna N
8 = Fluoroelastomer
9 = Polypropylene
A = PVDF
G = Geolast

B = SST with viton seal
C = Santoprene with viton seal

BALLS

1 = PTFE
2 = Acetal
3 = Stainless Steel
4 = Hardened SST
5 = TPE
6 = Santoprene
7 = Buna N
8 = Fluoroelastomer
9 = Polypropylene
A = PVDF
G = Geolast

DIAPHRAGM

1 = PTFE
5 = TPE
6 = Santoprene
7 = Buna N
8 = Fluoroelastomer
G = Geolast

** = BSP plastic in 1/2" (12.7mm) pumps*
≥1" Plastic pumps flange connections
3" Aluminum pumps flange/npt (f) combination connections
Note: Above matrix is all possible combinations. All combination may not be available. See specific pump listings for available combinations.

Diaphragm Pump Kit Designation

When selecting a kit, use the same code numbers as for the pumps regarding pump size, seat, ball/checks and diaphragm.

D	0	X	X	X	X
Diaphragm Pump	Kit	Pump Size	Seats	Balls/ Checks	Diaphragms

Pump Size

1 = 1/4 in (6.35 mm)
3 = 3/8 in (9.52 mm)
5 = 1/2 in (12.7 mm) and 3/4 in (19.05 mm)
1" (25.4 mm) refer to Husky 1050 Selector Tool, page 5
B = 1-1/2 in (38.1 mm) metal pump
C = 1-1/2 in (38.1 mm) plastic pump
F = 2 in (50.8 mm) metal pump
G = 2 in (50.8 mm) plastic pump
K = 3 in (76.2 mm)

Seats

0 = No seat
2 = Acetal
3 = Stainless Steel
4 = Hardened SST
5 = TPE
6 = Santoprene
7 = Buna N
8 = Fluoroelastomer
9 = Poly
A = PVDF
B = SST with viton seal
C = Santoprene with viton seal
G = Geolast

Balls/Checks

1 = PTFE
2 = Acetal
3 = Stainless Steel
4 = Hardened SST
5 = TPE
6 = Santoprene
7 = Buna-N
8 = Fluoroelastomer
9 = Poly
A = PVDF
G = Geolast

0 = No Balls/Checks

Diaphragm

1 = PTFE
5 = TPE
6 = Santoprene
7 = Buna-N
8 = Fluoroelastomer
G = Geolast

0 = No Diaphragm

NEW! Husky 1050 Selector Tool

Find the Right Pump for your Application

To order a Husky 1050, use the online selector tool at **www.graco.com/process** or contact your distributor.

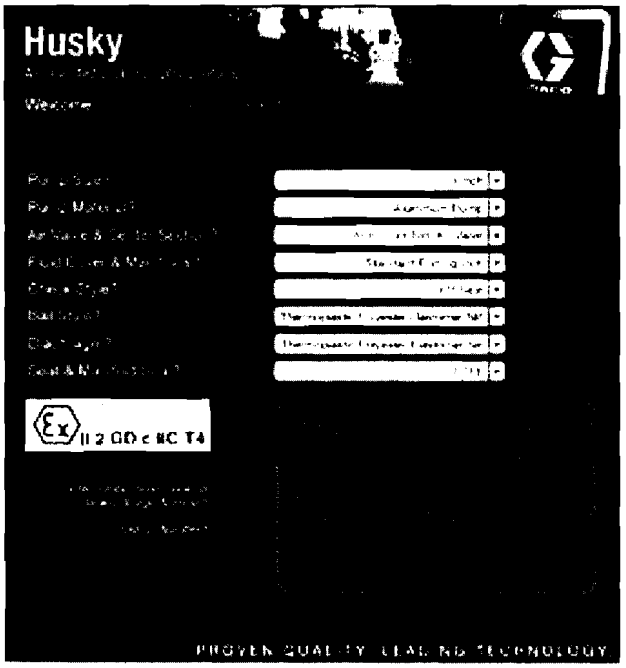

Example of Product Selector Tool on www.graco.com/process.

Wetted Parts Material Options

Acetal *Material used for seats, balls & wetted body parts*
- Wide range of solvent resistance
- Withstands extreme fatigue
- Good level of abrasion resistance
- Groundable for use with flammables
- Not for use with acids or bases

Aluminum *Material used for air motor & wetted body parts*
- Medium corrosion and abrasion resistance
- Not for use with halogenated hydrocarbons

Ductile Iron *Material used for wetted body parts*
- High abrasion resistance

Hardened SST *Material used for seats and balls*
- Moderate chemical resistance
- Good abrasion resistance
- Abrasion resistant balls and seats

PVDF *Material used for wetted body parts & seats*
- Strong chemical resistance: acids and bases
- Good abrasion resistance
- High temperature resistance

Polypropylene *Material used for air motor, wetted body parts, seats & balls*
- Wide chemical compatibility
- General purpose
- Inexpensive alternative

Stainless Steel *Material used for air motor, wetted body parts, and seats and balls*
- High level of corrosion and abrasion resistance
- Passivated for use with waterbase coatings

Buna-N *Material used for seats, balls and diaphragms*
- Good for petroleum-based fluids
- Not for use with strong solvents or chemicals
- Food grade

Geolast *Material used for seats, balls & diaphragms*
- Good abrasion resistance
- Same chemical compatibility as Buna-N and TPE

TPE *Material used for seats, balls & diaphragms*
- Good abrasion resistance
- Often substituted for Buna-N

Santoprene® *Material used for seats, balls & diaphragms*
- Good abrasion and chemical resistance
- Not for use with solvents or hydrocarbons
- Often substituted for EPDM or EPR
- Food grade

PTFE *Material used for balls & diaphragms*
- Excellent when used with solvents
- Poor abrasion resistance
- Widest chemical compatibility with fluids
- Food grade

Fluoroelastomer *Material used for seats, balls & diaphragms*
- High level of corrosion resistance with acids
- Resists unleaded fuels
- Food grade

Ordering Information

D	X	X	X	X	X
Diaphragm Pump	Pump Size	Wetted Parts	Seats	Balls/ Checks	Diaphragms

PUMP SIZE (AIR MOTOR TYPE AND MATERIAL)	WETTED PARTS	SEATS	CHECK VALVES	DIAPHRAGM
1 = 1/4" (6.35 mm) Standard: polypropylene center section	1 = Acetal (npt)	0 = No Seats	2 = Acetal	1 = PTFE
2 = 1/4" (6.35 mm) Remote: polypropylene center section	2 = Poly (npt)		9 = Polypropylene	6 = Santoprene
	5 = PVDF (npt)		A = PVDF	

Popular Models

Material	Part Number (NPT Ported) Standard Air Valve	Part Number (NPT Ported) Remote* Air Valve	Part Number (BSP Ported) Standard Air Valve	Part Number (BSP Ported) Remote* Air Valve	Materials for Check Valves	Materials for Diaphragms	Fluid Kit	Air Kit	Air Control**
Acetal	D11021	D21021	D11021	D21021	Acetal	PTFE	D01021	238853	246946
	D11026	D21026	D11026	D21026	Acetal	Santoprene	D01026	238853	246946
PVDF	D150A1	D250A1	D150A1	D250A1	PVDF	PTFE	D010A1	238853	246946
	D150A6	D250A6	D150A6	D250A6	PVDF	Santoprene	D010A6	238853	246946
Polypropylene	D12091	D22091	D12091	D22091	Polypropylene	PTFE	D01091	238853	246946
	D12096	D22096	D12096	D22096	Polypropylene	Santoprene	D01096	238853	246946

** Requires Cycleflo or external valve control*

*** Air control includes air regulator and filter with gauge*

Technical Specifications

Husky 205 Plastic Pumps	Acetal	Polypropylene	PVDF
Maximum fluid working pressure	100 psi (7 bar, 0.7 MPa)	100 psi (7 bar, 0.7 MPa)	100 psi (7 bar, 0.7 MPa)
Maximum free flow delivery*	5.0 gpm (18.9 lpm)	5.0 gpm (18.9 lpm)	5.0 gpm (18.9 lpm)
Maximum pump speed	250 cpm	250 cpm	250 cpm
Displacement per cycle**	0.02 gallon (0.076 liter)	0.02 gallon (0.076 liter)	0.02 gallon (0.076 liter)
Maximum suction lift (D12096)	10 ft (3 m) dry	10 ft (3 m) dry	10 ft (3 m) dry
Maximum size pumpable solids	0.06 in (1.5 mm)	0.06 in (1.5 mm)	0.06 in (1.5 mm)
Maximum operating temperature***	180°F (82°C)	180°F (82°C)	180°F (82°C)
Maximum diaphragm operating temperature***			
PTFE	220°F (104.4°C)	220°F (104.4°C)	220°F (104.4°C)
Santoprene	180°F (82.2°C)	180°F (82.2°C)	180°F (82.2°C)
Typical sound level at 70 psi (4.9 bar, 0.49 MPa) air @ 125 cpm	70 dBa	70 dBa	70 dBa
Maximum air consumption	9.0 scfm (0.252 m3/min)	9.0 scfm (0.252 m3/min)	9.0 scfm (0.252 m3/min)
Air pressure operating range	20 to 100 psi (1.4 to 7 bar, 0.14 to 0.7 MPa)	20 to 100 psi (1.4 to 7 bar, 0.14 to 0.7 MPa)	20 to 100 psi (1.4 to 7 bar, 0.14 to 0.7 MPa)
Air inlet size	1/4 npt(f)	1/4 npt(f)	1/4 npt(f)
Air exhaust port size	1/4 npt(f)	1/4 npt(f)	1/4 npt(f)
Fluid inlet & outlet size****	1/4 npt(f)	1/4 npt(f)	1/4 npt(f)
Weight	2.5 lb (1.1 kg)	2.0 lb (0.9 kg)	2.8 lb (1.3 kg)
Wetted parts (in addition to ball, seat and diaphragm materials– which may vary by pump)	Acetal with Stainless Steel fibers, PTFE, Acetal, Santoprene	Glass-filled Polypropylene, Santoprene, PTFE, Polypropylene	PVDF, PTFE, Santoprene
Instruction manual	308652	308652	308652

*** Displacement per cycle may vary based on suction condition, discharge head, air pressure and fluid type*

**** Actual pump performance may be affected by prolonged usage at temperature*

***** Hybrid thread allows for either 1/4 npt or 1/4 bspt fitting*

Husky 205 Plastic Pumps

Performance Charts

Husky 205 Performance

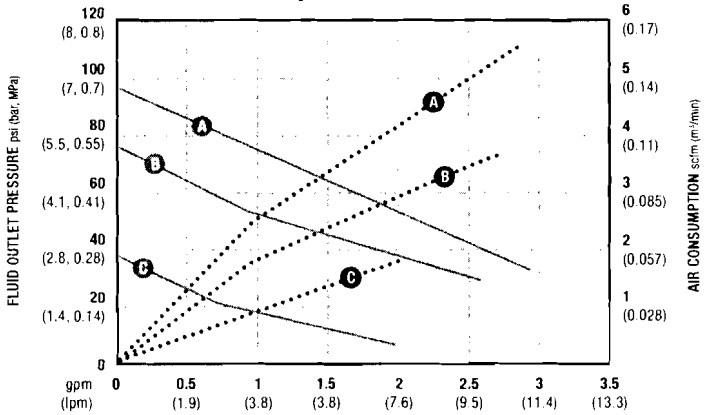

AIR PRESSURE	LEGEND
(A) = at 100 psi (7 bar, 0.7 MPa)	Air Consumption ·····
(B) = at 70 psi (4.8 bar, 0.48 MPa)	Fluid Flow ——
(C) = at 40 psi (2.8 bar, 0.28 MPa)	

Dimensions

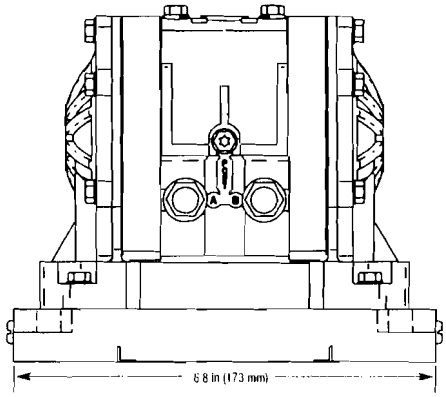

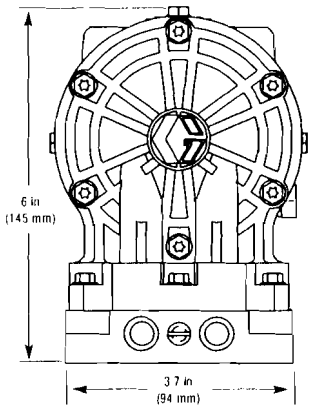

Typical System Drawings

Husky 205 Wall-Mount with CycleFlo

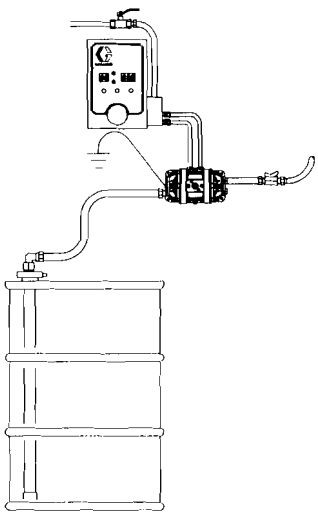

Ordering Information

D	X	X	X	X	X
Diaphragm Pump	Pump Size	Wetted Parts	Seats	Balls/ Checks	Diaphragms

PUMP SIZE (AIR MOTOR TYPE AND MATERIAL)	WETTED PARTS	SEATS	BALLS	DIAPHRAGM
3 = 3/8" (9.52 mm) Standard: polypropylene center section	1 = Acetal (npt)	2 = Acetal	1 = PTFE	1 = PTFE
	2 = Poly (npt)	3 = Stainless Steel	3 = SST	5 = TPE
		9 = Polypropylene	5 = TPE	6 = Santoprene
	A = Acetal * (bsp)		6 = Santoprene	7 = Buna N
	B = Poly * (bsp)		7 = Buna N	

Popular Models

Material	Part Number (NPT Ported)		Part Number (BSP Ported)		Materials for Seats	Materials for Balls	Materials for Diaphragms	Fluid Kit	Air Kit	Air Control*
	Standard Air Valve	Remote Air Valve	Standard Air Valve	Remote Air Valve						
Acetal	D31211	NA	D3A211	NA	Acetal	PTFE	PTFE	D03211	239952	246946
	D31255	NA	D3A255	NA	Acetal	TPE	TPE	D03255	239952	246946
	D31277	NA	D3A277	NA	Acetal	Buna	Buna	D03277	239952	246946
	D31311	NA	D3A311	NA	Stainless Steel	PTFE	PTFE	D03311	239952	246946
Polypropylene	D32211	NA	D3B211	NA	Acetal	PTFE	PTFE	D03211	239952	246946
	D32255	NA	D3B255	NA	Acetal	TPE	TPE	D03255	239952	246946
	D32277	NA	D3B277	NA	Acetal	Buna	Buna	D03277	239952	246946
	D32311	NA	D3B311	NA	Stainless Steel	PTFE	PTFE	D03311	239952	246946
	D32366	NA	D3B366	NA	Stainless Steel	Santoprene	Santoprene	D03366	239952	246946
	D32911	NA	D3B911	NA	Polypropylene	PTFE	PTFE	D03911	239952	246946
	D32955	NA	D3B955	NA	Polypropylene	TPE	TPE	D03955	239952	246946
	D32966	NA	D3B966	NA	Polypropylene	Santoprene	Santoprene	D03966	239952	246946
	D32977	NA	D3B977	NA	Polypropylene	Buna	Buna	D03977	239952	246946

** Air control includes air regulator and filter with gauge*

Husky 307 Plastic Pumps

Technical Specifications

Husky 307 Plastic Pumps	Acetal	Polypropylene
Maximum fluid working pressure	100 psi (7 bar, 0.7 MPa)	100 psi (7 bar, 0.7 MPa)
Maximum free flow delivery*	7.0 gpm (26.5 lpm)	7.0 gpm (26.5 lpm)
Maximum pump speed	330 cpm	330 cpm
Displacement per cycle**	0.02 gallon (0.076 liter)	0.02 gallon (0.076 liter)
Maximum suction lift (D31255)	12 ft (3.7 m) dry	12 ft (3.7 m) dry
Maximum size pumpable solids	0.06 in (1.5 mm)	0.06 in (1.5 mm)
Maximum operating temperature***	150°F (65.5°C)	150°F (65.5°C)
Maximum diaphragm operating temperature***		
PTFE	220°F (104.4°C)	220°F (104.4°C)
Santoprene	180°F (82.2°C)	180°F (82.2°C)
Buna-N	180°F (82.2°C)	180°F (82.2°C)
TPE	150°F (65.5°C)	150°F (65.5°C)
Typical sound level at 50 psi (3.5 bar, 0.35 MPa) air @ 50 cpm	75 dBa	75 dBa
Maximum air consumption	6 scfm (0.17 m3/min)	6 scfm (0.17 m3/min)
Air pressure operating range	20 to 100 psi (1.4 to 8.4 bar, 0.14 to 0.84 MPa)	20 to 100 psi (1.4 to 8.4 bar, 0.14 to 0.84 MPa)
Air inlet size	1/4 npt(f) or bspt(f)	1/4 npt(f) or bspt(f)
Fluid inlet & outlet size****	3/8 npt(f)	3/8 npt(f)
Weight	5.2 lb (2.4 kg)	4.75 lb (2.2 kg)
Wetted parts (in addition to ball, seat and diaphragm materials–which may vary by pump)	Acetal with Stainless Steel fibers, PTFE	Polypropylene, PTFE
Instruction manual	308553	308553

**Flow rates are with muffler and do not vary based on diaphragm material*
***Displacement per cycle may vary based on suction condition, discharge head, air pressure and fluid type*
****Actual pump performance may be affected by prolonged usage at temperature*

Performance Chart

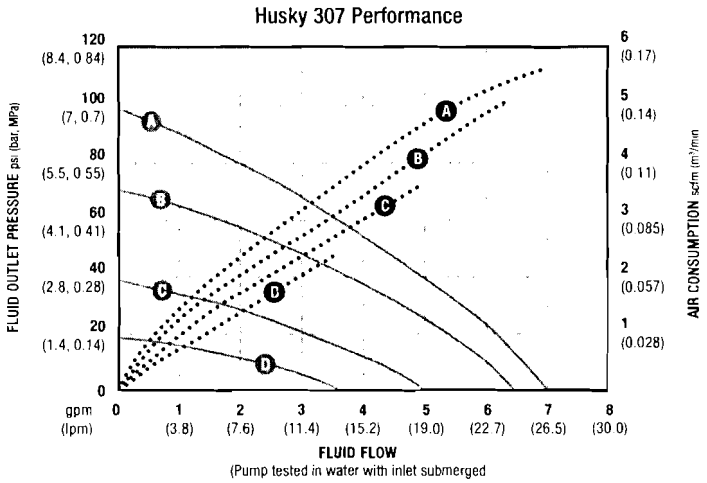

AIR PRESSURE	LEGEND
(A) = at 100 psi (7 bar, 0.7 MPa)	Air Consumption ·····
(B) = at 70 psi (4.8 bar, 0.48 MPa)	Fluid Flow ———
(C) = at 40 psi (2.8 bar, 0.28 MPa)	
(D) = at 20 psi (1.4 bar, 0.14 MPa)	

Dimensions

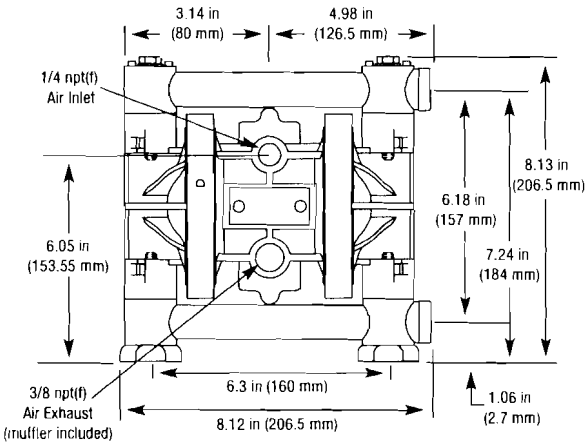

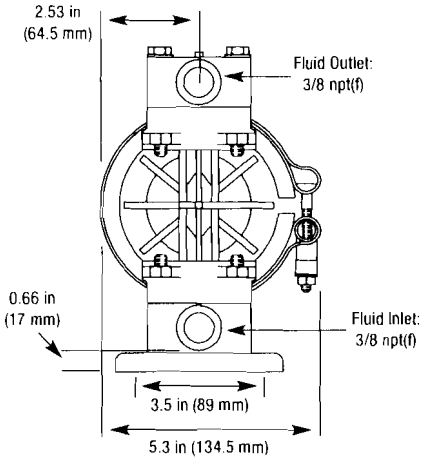

Typical System Drawings

Husky 307 Wall-Mount with Siphon Feed

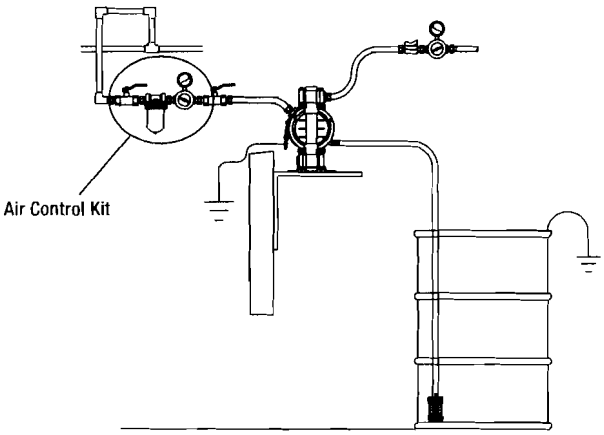

Husky 307 Drum-Mount with Siphon Feed

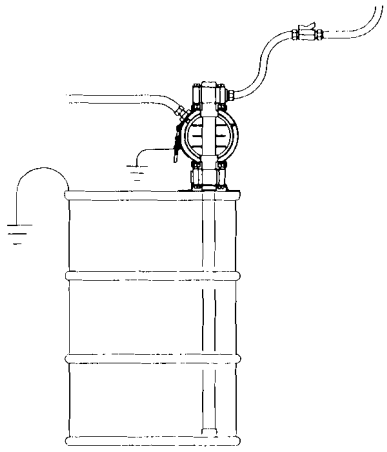

Husky 515 Plastic Pumps
Air-Operated Double Diaphragm

Ordering Information

D	X	X	X	X	X
Diaphragm Pump	Pump Size	Wetted Parts	Seats	Balls/ Checks	Diaphragms

PUMP SIZE (AIR MOTOR TYPE AND MATERIAL)	WETTED PARTS	SEATS	BALLS	DIAPHRAGM
5 = 1/2" (12.7 mm) Standard: polypropylene center section	1 = Acetal (npt)	2 = Acetal	1 = PTFE	1 = PTFE
4 = 1/2" (12.7 mm) Remote: polypropylene center section	2 = Poly (npt)	3 = Stainless Steel	3 = Stainless Steel	5 = TPE
	5 = PVDF (npt)	9 = Polypropylene	5 = TPE	6 = Santoprene
	A = Acetal * (bsp)	A = PVDF	6 = Santoprene	7 = Buna N
	B = Poly * (bsp)	D = Urethane Duckbill	7 = Buna N	8 = Fluoroelastomer
	E = PVDF (bsp)		8 = Fluoroelastomer	
			0 = Duckbill	

** = BSP plastic in 1/2" (12.7 mm) pumps*

Popular Models

Material	Part Number (NPT Ported)		Part Number (BSP Ported)		Materials for Seats	Materials for Balls	Materials for Diaphragms	Fluid Kit	Air Kit	Air Control**
	Standard Air Valve	Remote* Air Valve	Standard Air Valve	Remote* Air Valve						
Acetal	D51211	D41211	D5A211	D4A211	Acetal	PTFE	PTFE	D05211	241657	246946
	D51255	D41255	D5A255	D4A255	Acetal	TPE	TPE	D05255	241657	246946
	D51277	D41277	D5A277	D4A277	Acetal	Buna	Buna	D05277	241657	246946
	D51311	D41311	D5A311	D4A311	Stainless Steel	PTFE	PTFE	D05311	241657	246946
	D51331	D41331	D5A331	D4A331	Stainless Steel	Stainless Steel	PTFE	D05331	241657	246946
	D51D05	D41D05	D5AD05	D4AD05	Duckbill		TPE	D05D05	241657	246946
	D51D06	D41D06	D5AD06	D4AD06	Duckbill		Santoprene	D05D06	241657	246946
	D51D07	D41D07	D5AD07	D4AD07	Duckbill		Buna	D05D07	241657	246946
Polypropylene	D52211	D42211	D5B211	D4B211	Acetal	PTFE	PTFE	D05211	241657	246946
	D52277	D42277	D5B277	D4B277	Acetal	Buna	Buna	D05277	241657	246946
	D52311	D42311	D5B311	D4B311	Stainless Steel	PTFE	PTFE	D05311	241657	246946
	D52331	D42331	D5B331	D4B331	Stainless Steel	Stainless Steel	PTFE	D05331	241657	246946
	D52336	D42336	D5B336	D4B336	Stainless Steel	Stainless Steel	Santoprene	D05336	241657	246946
	D52911	D42911	D5B911	D4B911	Polypropylene	PTFE	PTFE	D05911	241657	246946
	D52955	D42955	D5B955	D4B955	Polypropylene	TPE	TPE	D05955	241657	246946
	D52966	D42966	D5B966	D4B966	Polypropylene	Santoprene	Santoprene	D05966	241657	246946
	D52977	D42977	D5B977	D4B977	Polypropylene	Buna	Buna	D05977	241657	246946
	D52988	D42988	D5B988	D4B988	Polypropylene	Fluoroelastomer	Fluoroelastomer	D05988	241657	246946
	D52D05	D42D05	D5BD05	D4BD05	Duckbill		TPE	D05D05	241657	246946
	D52D06	D42D06	D5BD06	D4BD06	Duckbill		Santoprene	D05D06	241657	246946
	D52D07	D42D07	D5BD07	D4BD07	Duckbill		Buna	D05D07	241657	246946
PVDF	D55A11	D45A11	D5EA11	D4EA11	PVDF	PTFE	PTFE	D05A11	241657	246946
	D55A88	D45A88	D5EA88	D4EA88	PVDF	Fluoroelastomer	Fluoroelastomer	D05A88	241657	246946

**Required Cycleflo or external valve control*

*** Air control includes air regulator and filter with gauge*

Technical Specifications

Husky 515 Plastic Pumps	Acetal	Polypropylene	PVDF
Maximum fluid working pressure	100 psi (7 bar, 0.7 MPa)	100 psi (7 bar, 0.7 MPa)	100 psi (7 bar, 0.7 MPa)
Maximum free flow delivery*	15 gpm (57 lpm)	15 gpm (57 lpm)	15 gpm (57 lpm)
Maximum pump speed	400 cpm	400 cpm	400 cpm
Displacement per cycle**	0.04 gallon (0.15 liter)	0.04 gallon (0.15 liter)	0.04 gallon (0.15 liter)
Maximum suction lift	15 ft (4.5 m) dry	15 ft (4.5 m) dry	15 ft (4.5 m) dry
Maximum size pumpable solids	0.09 in (2.5 mm)	0.09 in (2.5 mm)	0.09 in (2.5 mm)
Maximum operating temperature***	180°F (82°C)	150°F (66°C)	225°F (107°C)
Maximum diaphragm operating temperature***			
PTFE	220°F (104.4°C)	220°F (104.4°C)	220°F (104.4°C)
Santoprene	180°F (82.2°C)	180°F (82.2°C)	180°F (82.2°C)
Buna-N	180°F (82.2°C)	180°F (82.2°C)	180°F (82.2°C)
TPE	150°F (65.5°C)	150°F (65.5°C)	150°F (65.5°C)
Fluoroelastomer	250°F (121.1°C)	250°F (121.1°C)	250°F (121.1°C)
Typical sound level at 70 psi (4.9 bar, 0.49 MPa) air @ 125 cpm	74 dBa	74 dBa	74 dBa
Maximum air consumption	28 scfm (0.672 m3/min)	28 scfm (0.672 m3/min)	28 scfm (0.672 m3/min)
Air pressure operating range	30 to 100 psi (2.1 to 7 bar, 0.21 to 0.7 MPa)	30 to 100 psi (2.1 to 7 bar, 0.21 to 0.7 MPa)	30 to 100 psi (2.1 to 7 bar, 0.21 to 0.7 MPa)
Air inlet size	1/4 npt(f)	1/4 npt(f)	1/4 npt(f)
Air exhaust port size	3/8 npt(f)	3/8 npt(f)	3/8 npt(f)
Fluid inlet & outlet size****	1/2 npt(f) or bspt(f)	1/2 npt(f) or bspt(f)	1/2 npt(f) or bspt(f)
Weight	7.8 lb (3.5 kg)	6.5 lb (2.9 kg)	8.5 lb (3.9 kg)
Wetted parts (in addition to ball, seat and diaphragm materials– which may vary by pump)	Groundable Acetal, PTFE, SST	Polypropylene, PTFE, SST	PVDF, PTFE
Instruction manual	308981	308981	308981

Flow rates are with muffler and do not vary based on diaphragm material. **Displacement per cycle may vary based on suction condition, discharge head, air pressure and fluid type ***Actual pump performance may be affected by prolonged usage at temperature. ** Hybrid thread allows for either 1/4 npt or 1/4 bspt fitting*

Performance Charts

Husky 515 Performance

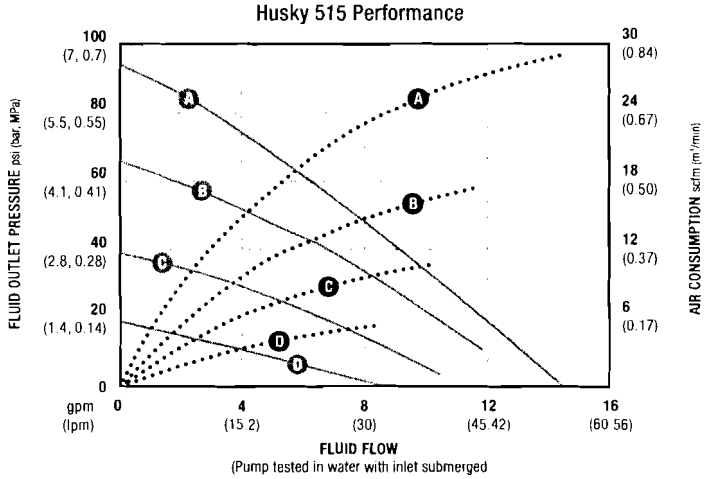

AIR PRESSURE	LEGEND
Ⓐ = at 100 psi (7 bar, 0.7 MPa)	Air Consumption ·····
Ⓑ = at 70 psi (4.8 bar, 0.48 MPa)	Fluid Flow ———
Ⓒ = at 40 psi (2.8 bar, 0.28 MPa)	
Ⓓ = at 20 psi (1.4 bar, 0.14 MPa)	

Husky 515 Plastic Pumps

Dimensions

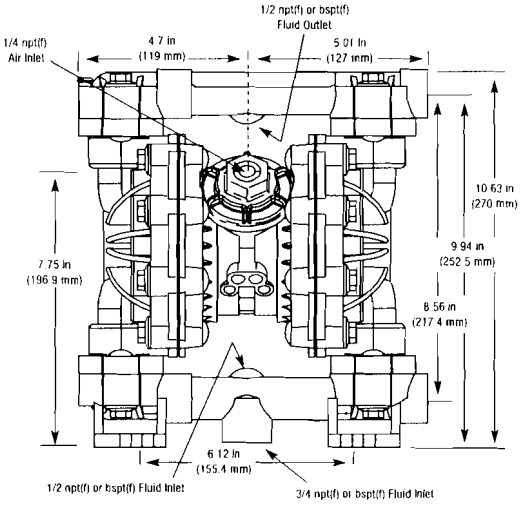

Typical System Drawings

Husky 515 Wall-Mount with Drum Feed

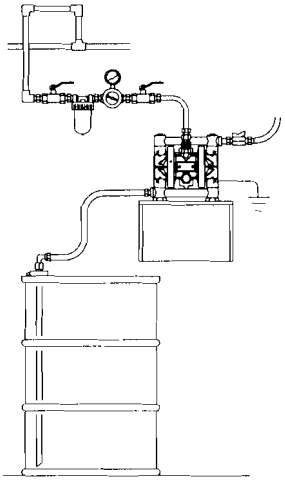

Husky 515 Drum-Mount with Siphon Feed

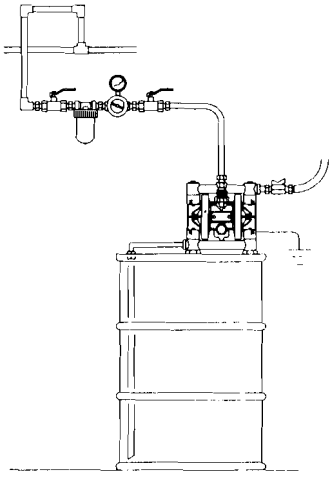

Ordering Information

D	X	X	X	X	X
Diaphragm Pump	Pump Size	Wetted Parts	Seats	Balls/ Checks	Diaphragms

PUMP SIZE (AIR MOTOR TYPE AND MATERIAL)	WETTED PARTS	SEATS	BALLS	DIAPHRAGM
5 = 3/4" (19.05 mm) Standard: polypropylene center section	3 = Aluminum (npt)	2 = Acetal	1 = PTFE	1 = PTFE
4 = 3/4" (19.05 mm) Remote: polypropylene center section	4 = Stainless Steel (npt)	3 = Stainless Steel	3 = Stainless Steel	5 = TPE
		9 = Polypropylene	5 = TPE	6 = Santoprene
	C = Aluminum (bsp)	A = PVDF	6 = Santoprene	7 = Buna N
	D = Stainless Steel (bsp)	D = Duckbill	7 = Buna N	8 = Fluoroelastomer
			8 = Fluoroelastomer	

Popular Models

Material	Part Number (NPT Ported)		Part Number (BSP Ported)		Materials for Seats	Materials for Balls	Materials for Diaphragms	Fluid Kit	Air Kit	Air Control**
	Standard Air Valve	Remote* Air Valve	Standard Air Valve	Remote* Air Valve						
Aluminum	D53211	D43211	D5C211	D4C211	Acetal	PTFE	PTFE	D05211	241657	246946
	D53255	D43255	D5C255	D4C255	Acetal	TPE	TPE	D05255	241657	246946
	D53277	D43277	D5C277	D4C277	Acetal	Buna	Buna	D05277	241657	246946
	D53288	D43288	D5C288	D4C288	Acetal	Fluoroelastomer	Fluoroelastomer	D05288	241657	246946
	D53311	D43311	D5C311	D4C311	Stainless Steel	PTFE	PTFE	D05311	241657	246946
	D53331	D43331	D5C331	D4C331	Stainless Steel	Stainless Steel	PTFE	D05331	241657	246946
	D53355	D43355	D5C355	D4C355	Stainless Steel	TPE	TPE	D05355	241657	246946
	D53366	D43366	D5C366	D4C366	Stainless Steel	Santoprene	Santoprene	D05366	241657	246946
	D53377	D43377	D5C377	D4C377	Stainless Steel	Buna	Buna	D05377	241657	246946
	D53388	D43388	D5C388	D4C388	Stainless Steel	Fluoroelastomer	Fluoroelastomer	D05388	241657	246946
	D53911	D43911	D5C911	D4C911	Polypropylene	Polypropylene	Polypropylene	D05911	241657	246946
	D53955	D43955	D5C955	D4C955	Polypropylene	TPE	TPE	D05955	241657	246946
	D53966	D43966	D5C966	D4C966	Polypropylene	Santoprene	Santoprene	D05966	241657	246946
	D53977	D43977	D5C977	D4C977	Polypropylene	Buna	Buna	D05977	241657	246946
	D53D05	D43D05	D5CD05	D4CD05		Duckbill	TPE	D05D05	241657	246946
	D53D06	D43D06	D5CD06	D4CD06		Duckbill	Santoprene	D05D06	241657	246946
	D53D07	D43D07	D5CD07	D4CD07		Duckbill	Buna	D05D07	241657	246946
Stainless Steel	D54211	D44211	D5D211	D4D211	Acetal	PTFE	PTFE	D05211	241657	246946
	D54311	D44311	D5D311	D4D311	Stainless Steel	PTFE	PTFE	D05311	241657	246946
	D54331	D44331	D5D331	D4D331	Stainless Steel	Stainless Steel	PTFE	D05331	241657	246946
	D54335	D44335	D5D335	D4D335	Stainless Steel	Stainless Steel	TPE	D05335	241657	246946
	D54336	D44336	D5D336	D4D336	Stainless Steel	Stainless Steel	Santoprene	D05336	241657	246946
	D54355	D44355	D5D355	D4D355	Stainless Steel	TPE	TPE	D05355	241657	246946
	D54366	D44366	D5D366	D4D366	Stainless Steel	Santoprene	Santoprene	D05366	241657	246946
	D54377	D44377	D5D377	D4D377	Stainless Steel	Buna	Buna	D05377	241657	246946
	D54388	D44388	D5D388	D4D388	Stainless Steel	Fluoroelastomer	Fluoroelastomer	D05388	241657	246946
	D54911	D44911	D5D911	D4D911	Polypropylene	PTFE	PTFE	D05911	241657	246946
	D54966	D44966	D5D966	D4D966	Polypropylene	Santoprene	Santoprene	D05966	241657	246946

** Requires CycleFlo or external valve control*

*** Air control includes air regulator and filter with gauge*

Husky 716 Metal Pumps

Technical Specifications

Husky 307 Plastic Pumps	Aluminum	Stainless Steel
Maximum fluid working pressure	100 psi (7 bar, 0.7 MPa)	100 psi (7 bar, 0.7 MPa)
Maximum free flow delivery*	16 gpm (61 lpm)	16 gpm (61 lpm)
Maximum pump speed	400 cpm	400 cpm
Displacement per cycle**	0.04 gallon (0.15 liter)	0.04 gallon (0.15 liter)
Maximum suction lift	15 ft (4.5 m) dry	15 ft (4.5 m) dry
Maximum size pumpable solids	0.09 in (2.5 mm)	0.09 in (2.5 mm)
Maximum diaphragm operating temperature***		
PTFE	220°F (104.4°C)	220°F (104.4°C)
Santoprene	180°F (82.2°C)	180°F (82.2°C)
Buna-N	180°F (82.2°C)	180°F (82.2°C)
TPE	150°F (65.5°C)	150°F (65.5°C)
Fluoroelastomer	250°F (121.1°C)	250°F (121.1°C)
Typical sound level at 70 psi air (4.9 bar, 0.49 MPa) air @ 200 cpm	74 dBa	74 dBa
Maximum air consumption	28 scfm (0.672 m3/min)	28 scfm (0.672 m3/min)
Air pressure operating range	30 to 100 psi (2.1 to 7 bar, 0.21 to 0.7 MPa)	30 to 100 psi (2.1 to 7 bar, 0.21 to 0.7 MPa)
Air inlet size	1/4 npt(f)	1/4 npt(f)
Air exhaust port size	3/8 npt(f)	3/8 npt(f)
Fluid inlet & outlet size	3/4 npt(f) or bspt(f)	3/4 npt(f) or bspt(f)
Weight	8.5 lb (3.9 kg)	18 lb (8.2 kg)
Wetted parts (in addition to ball, seat and diaphragm materials–which may vary by pump)	Aluminum, Stainless Steel, PTFE, Buna-N, Santroprene, Zinc-Plated Steel	Acetal, Polypropylene, Stainless Steel, Polyester, Santoprene, Fluoroelastomer, Nickel-Plated Brass, Epoxy-Coated Steel
Instruction manual	308981	308981

**Flow rates are with muffler and do not vary based on diaphragm material*
***Displacement per cycle may vary based on suction condition, discharge head, air pressure and fluid type*
****Actual pump performance may be affected by prolonged usage at temperature*

Performance Charts

Husky 716 Performance

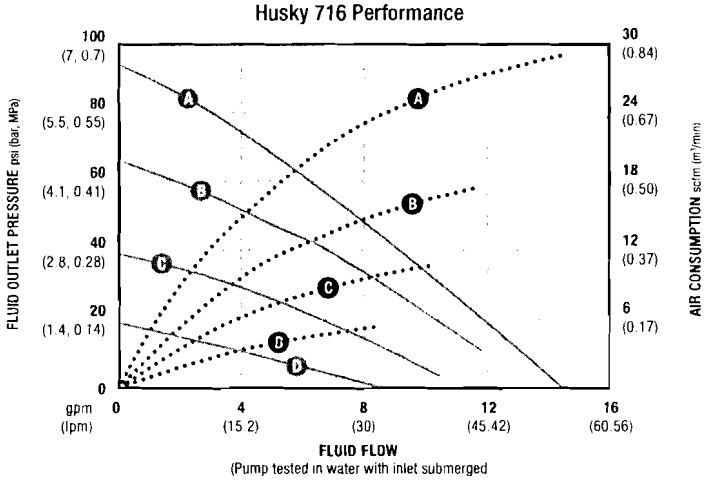

AIR PRESSURE	LEGEND
Ⓐ = at 100 psi (7 bar, 0.7 MPa)	Air Consumption ·····
Ⓑ = at 70 psi (4.8 bar, 0.48 MPa)	Fluid Flow ———
Ⓒ = at 40 psi (2.8 bar, 0.28 MPa)	
Ⓓ = at 20 psi (1.4 bar, 0.14 MPa)	

Dimensions

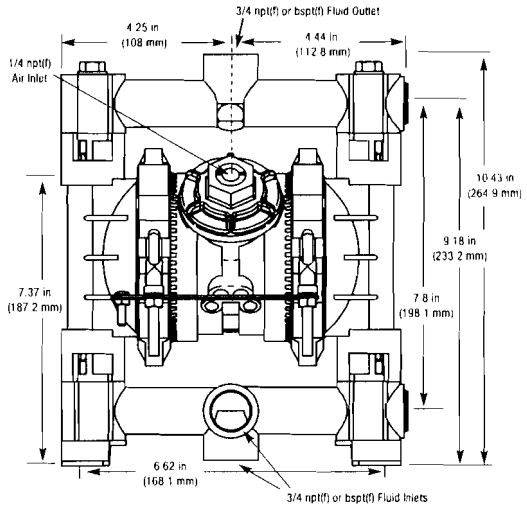

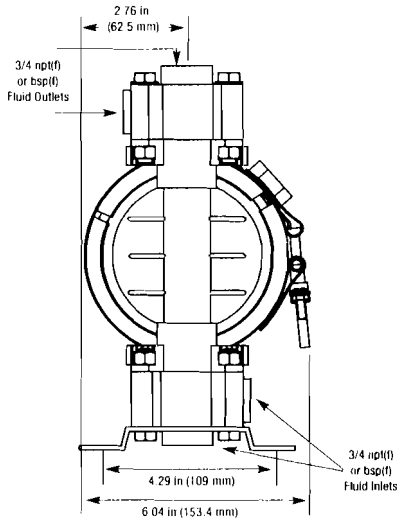

Typical System Drawings

Husky 716 Wall-Mount with Drum Feed

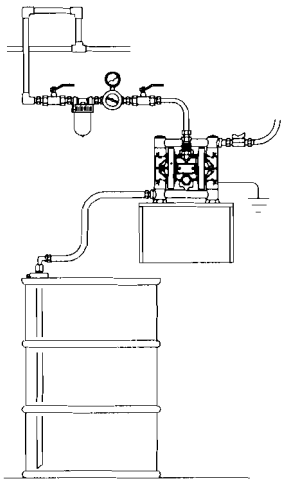

Husky 716 Drum-Mount with Siphon Feed

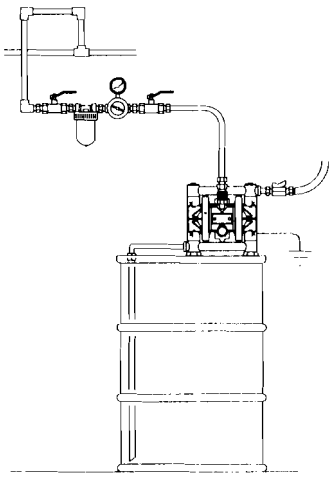

Husky 1050 Plastic Pumps
Air-Operated Double Diaphragm

NEW! Husky 1050 Selector Tool

To order a Husky 1050, use the online selector tool at **www.graco.com/process** or contact your distributor.

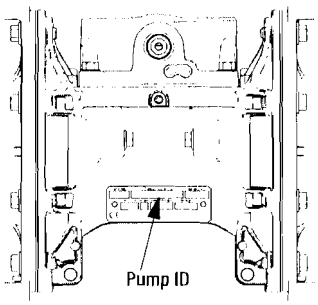

NOTE: Options for seats, check balls, diaphragms, and seals vary for the 1050A, 1050C, 1050P, and 1050S pump models.

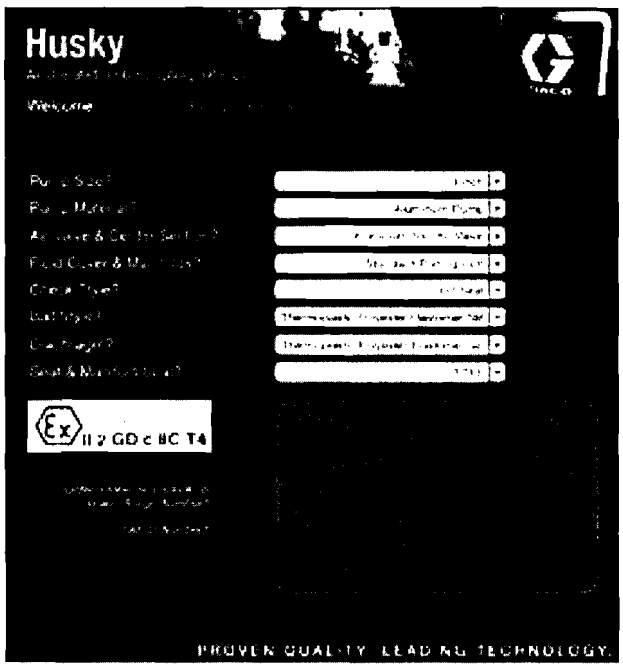

Example of Product Selector Tool on www.graco.com/process.

Pump Configurations

Pump (1 inch ports, 50 gpm)	Center Section and Air Valve Material		Air Valve/Monitoring
1050C ★ Conductive Polypropylene	Conductive Polypropylene	**C01A**	Standard
		C01B	Pulse Count ✖
		C01C	DataTrak ✖
1050P Polypropylene		**C01D**	Remote
	Polypropylene	**P01A**	Standard
		P01B	Pulse Count ✖
		P01C	DataTrak ✖
		P01D	Remote

Fluid Covers and Manifolds	
C1	Conductive polypropylene, center flange
C2	Conductive polypropylene, end flange
P1	Polypropylene, center flange
P2	Polypropylene, end flange

★, ‡, or ✖: See **ATEX Certifications** below.

Check Valve Seats		Check Valve Balls		Diaphragm		Manifold O-Rings	
AC	Acetal	**AC**	Acetal	**BN**	Buna-N	—	None
FK	FKM Fluoroelastomer	**BN**	Buna-N	**CO**	Polychloroprene Overmolded	**PT**	PTFE
PP	Polypropylene	**FK**	FKM Fluoroelastomer	**FK**	FKM Fluoroelastomer		
PV	PVDF	**PT**	PTFE	**PO**	PTFE/EPDM Overmolded		
SP	Santoprene®	**SP**	Santoprene	**PT**	PTFE/EPDM Two-Piece		
SS	316 Stainless Steel	**SS**	316 Stainless Steel	**SP**	Santoprene		
BN	Buna-N	**TP**	TPE	**TP**	TPE		
AL	Aluminum	**GE**	Geolast	**GE**	Geolast		
GE	Geolast	**CR**	Polychloroprene				
TP	TPE	**CW**	Polychloroprene w/SST Core				

ATEX Certifications

★ All **1050C** (Conductive Polypropylene) pumps are certified: Ex II 2 G c IIC T4

✖ DataTrak and Pulse Count are certified: Ex II 2 G EEx ia IIA T3 Nemko 06ATEX1124

Popular Models

Material	Part Number Standard Air Valve	Materials for Seats	Materials for Balls	Materials for Diaphragms	Air Valve Replacement Kit	Seat Kit	Ball Kit	Diaphragm Kit	Flange
Polypropylene	649001	Polypropylene	Santoprene	Santoprene	24B773	24B635	24B646	24B628	Center
	649006	Polypropylene	PTFE	PTFE/EPDM 2 Piece	24B773	24B635	24B645	24B627	Center
	649034	Polypropylene	PTFE	PTFE/EPDM 2 Piece	24B773	24B635	24B645	24B627	End
Conductive Polypropylene	649218	Acetal	PTFE	PTFE/EPDM 2 Piece	24B775	24B630	24B645	24B627	End
	649211	316 SST	PTFE	PTFE/EPDM 2 Piece	24B775	24B637	24B645	24B627	End
PVDF	649392	316 SST	PTFE	PTFE/EPDM 2 Piece	24B773	24B637	24B645	24B627	End
	649398	PVDF	PTFE	PTFE/EPDM 2 Piece	24B773	24C721	24B645	24B627	End

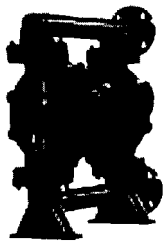

Technical Specifications

Husky 1050 Plastic Pumps	Conductive Polypropylene	Polypropylene	PVDF
Maximum fluid working pressure	125 psi (8.6 bar, 0.86 MPa)	125 psi (8.6 bar, 0.86 MPa)	125 psi (8.6 bar, 0.86 MPa)
Maximum free flow delivery	50 gpm (189 lpm)	50 gpm (189 lpm)	50 gpm (189 lpm)
Maximum pump speed	280 cpm	280 cpm	280 cpm
Displacement per cycle	0.17 gal (0.64 liters)	0.17 gal (0.64 liters)	0.17 gal (0.64 liters)
Maximum suction lift	16 ft (4.9 m) dry, 29 ft (8.8 m) wet	16 ft (4.9 m) dry, 29 ft (8.8 m) wet	16 ft (4.9 m) dry, 29 ft (8.8 m) wet
Maximum size pumpable solids	1/8 in (3.2 mm)	1/8 in (3.2 mm)	1/8 in (3.2 mm)
Sound Power*			
at 70 psi (4.8 bar, 0.48 MPa) and 50 cpm	78 dBa	78 dBa	78 dBa
at 100 psi (7.0 bar, 0.7 MPa) and full flow	90 dBa	90 dBa	90 dBa
Sound Pressure**			
at 70 psi (4.8 bar, 0.48 MPa) and 50 cpm	84 dBa	84 dBa	84 dBa
at 100 psi (7.0 bar, 0.7 MPa) and full flow	96 dBa	96 dBa	96 dBa
Maximum air consumption	67 scfm	67 scfm	67 scfm
Air consumption at 70 psi (4.8 bar, 0.48 MPa), 20 gpm (76 lpm)	25 scfm	25 scfm	25 scfm
Air pressure operating range	20-125 psi (1.4-8.6 bar, 0.14-0.86 MPa)	20-125 psi (1.4-8.6 bar, 0.14-0.86 MPa)	20-125 psi (1.4-8.6 bar, 0.14-0.86 MPa)
Air inlet size	1/2 npt(f)	1/2 npt(f)	1/2 npt(f)
Fluid inlet size	1 in raised face ANSI/DIN flange	1 in raised face ANSI/DIN flange	1 in raised face ANSI/DIN flange
Fluid outlet size	1 in raised face ANSI/DIN flange	1 in raised face ANSI/DIN flange	1 in raised face ANSI/DIN flange
Weight	18 lb (8.2 kg)	18 lb (8.2 kg)	21 lb (9.5 kg)
Wetted parts	polypropylene and material(s) chosen for seat, ball, and diaphragm options	polypropylene and material(s) chosen for seat, ball, and diaphragm options	polypropylene and material(s) chosen for seat, ball, and diaphragm options
Non-wetted Parts			
Center	polypropylene	polypropylene	polypropylene
Bolts	stainless steel	stainless steel	stainless steel
Instruction manual	312877	312877	312877
Repair/parts manual	313435	313435	313435

** Sound power measured per ISO-9614-2.*
*** Sound pressure was tested 3.28 ft (1 m) from equipment.*

Husky 1050 Plastic Pumps

Performance Charts

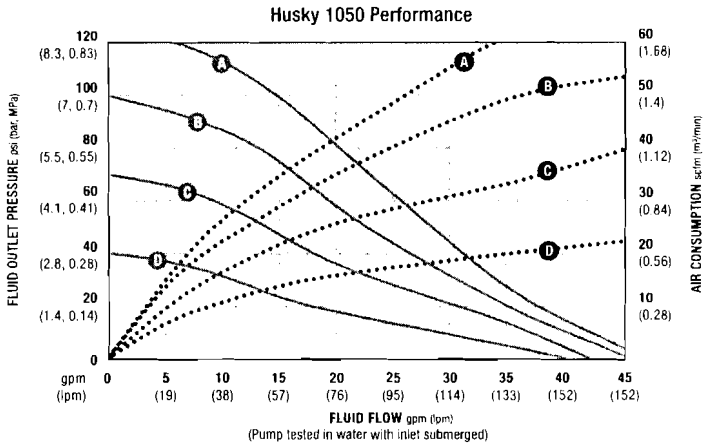

AIR PRESSURE	LEGEND
(A) = at 125 psi (8.3 bar, 0.83 MPa)	Air Consumption •••••
(B) = at 100 psi (7 bar, 0.7 MPa)	Fluid Flow ——
(C) = at 70 psi (4.8 bar, 0.48 MPa)	
(D) = at 40 psi (2.8 bar, 0.28 MPa)	

Mounting Pattern

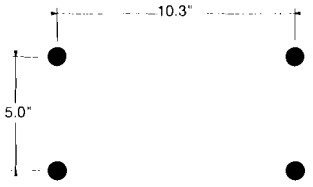

Dimensions

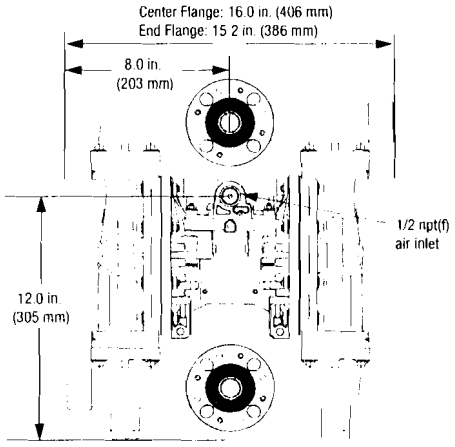

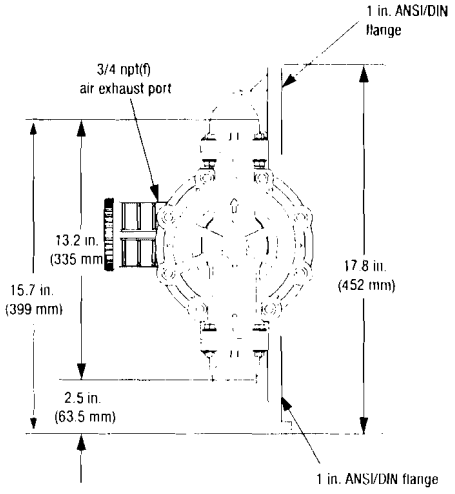

Typical System Drawings

Husky 1050 Bung-Mount

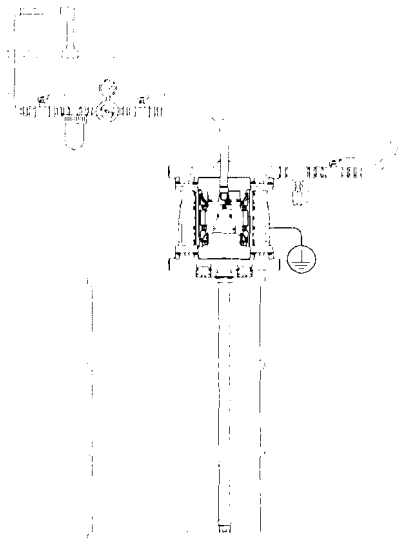

Husky 1050 Floor-Mount

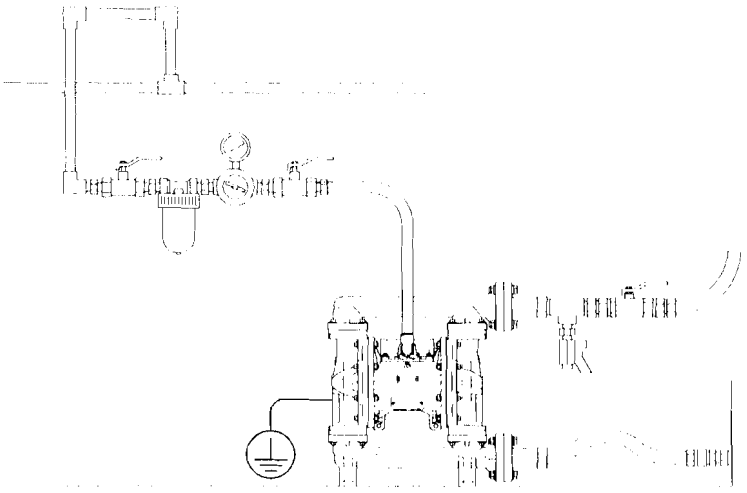

NEW! Husky 1050 Selector Tool

To order a Husky 1050, use the online selector tool at **www.graco.com/process** or contact your distributor.

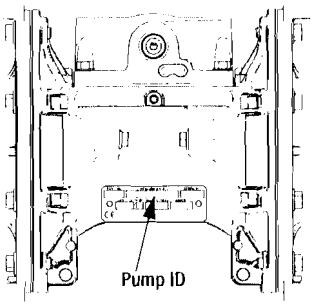

NOTE: Options for seats, check balls, diaphragms, and seals vary for the 1050A, 1050C, 1050P, and 1050S pump models.

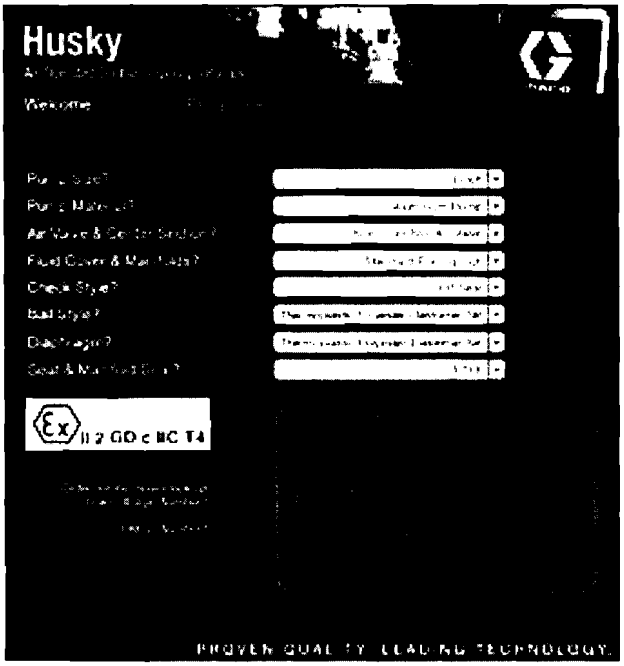

Example of Product Selector Tool on www.graco.com/process.

Pump Configurations

Pump (1 inch ports, 50 gpm)	Center Section and Air Valve Material	Air Valve/Monitoring		Fluid Covers and Manifolds	
1050A ★ Aluminum	Aluminum	**A01**	Standard	**A1**	Aluminum, standard ports, inch
		A01B	Pulse Count ✖	**A2**	Aluminum, standard ports, metric
1050S‡ Stainless Steel		**A01C**	DataTrak ✖	**S1**	Stainless steel, standard ports, inch
		A01D	Remote	**S2**	Stainless steel, standard ports, metric

★, ‡, or ✖: See **ATEX Certifications** below.

Check Valve Seats		Check Valve Balls		Diaphragm		Manifold O-Rings	
AC	Acetal	**AC**	Acetal	**BN**	Buna-N	—	None
AL	Aluminum	**BN**	Buna-N	**CO**	Polychloroprene Overmolded	**PT**	PTFE
BN	Buna-N	**CR**	Polychloroprene Standard	**FK**	FKM Fluoroelastomer		
FK	FKM Fluoroelastomer	**CW**	Polychloroprene Weighted	**GE**	Geolast		
GE	Geolast®	**FK**	FKM Fluoroelastomer	**PO**	PTFE/EPDM Overmolded		
PP	Polypropylene	**GE**	Geolast	**PT**	PTFE/EPDM Two-Piece		
SP	Santoprene®	**PT**	PTFE	**SP**	Santoprene		
SS	316 Stainless Steel	**SP**	Santoprene	**TP**	TPE		
TP	TPE	**SS**	316 Stainless Steel				
		TP	TPE				

ATEX Certifications

★ All **1050A** (Aluminum) pumps are certified:

Ex II 2 G c IIC T4

‡ **1050S** (Stainless Steel) pumps with aluminum or conductive polypropylene centers are certified:

Ex II 2 G c IIC T4

✖ DataTrak and Pulse Count are certified:

Ex II 2 G

EEx ia IIA T3
Nemko
06ATEX1124

Husky 1050 Metal Pumps

Popular Models

Material	Part Number		Materials for Seats	Materials for Balls	Materials for Diaphragms	Air Valve Replacement Kit	Seat Kit	Ball Kit	Diaphragm Kit
	Standard Air Valve	Remote Air Valve							
Aluminum	647666	647502	Thermoplastic Polyester Elastomer	Acetal	Thermoplastic Polyester Elastomer	24B766	24B634	24B639	24B624
	647016 (UL Certified)		Thermoplastic Polyester Elastomer	Acetal	Thermoplastic Polyester Elastomer	24B766	24B634	24B639	24B624
	647075	647561	Acetal	PTFE	PTFE/EPDM 2 Piece	24B766	24B630	24B645	24B627
	647040	647526	Geolast	Geolast	Geolast	24B766	24B633	24B641	24B623
	647035	647521	Santoprene	Santoprene	Santoprene	24B766	24B636	24B646	24B628
	647028	647514	316 SST	PTFE	PTFE/EPDM 2 Piece	24B766	24B637	24B645	24B627
	647004	647490	Polypropylene	PTFE	PTFE/EPDM 2 Piece	24B766	24B635	24B645	24B627
	647018	647504	316 SST	316 SST	PTFE/EPDM 2 Piece	24B766	24B637	24B647	24B627
Stainless Steel	651009	651125	316 SST	PTFE	PTFE/EPDM 2 Piece	24B766	24B637	24B645	24B627

Typical System Drawings

Husky 1050 Bung-Mount

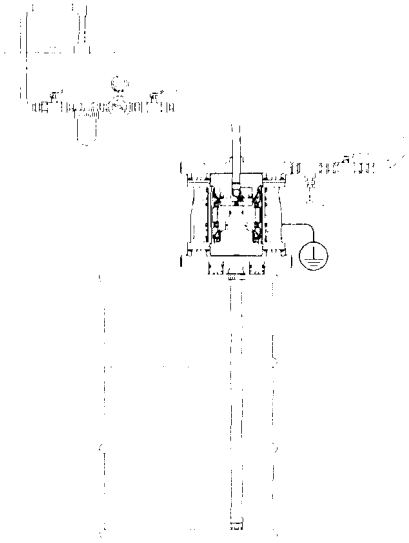

Husky 1050 Floor-Mount

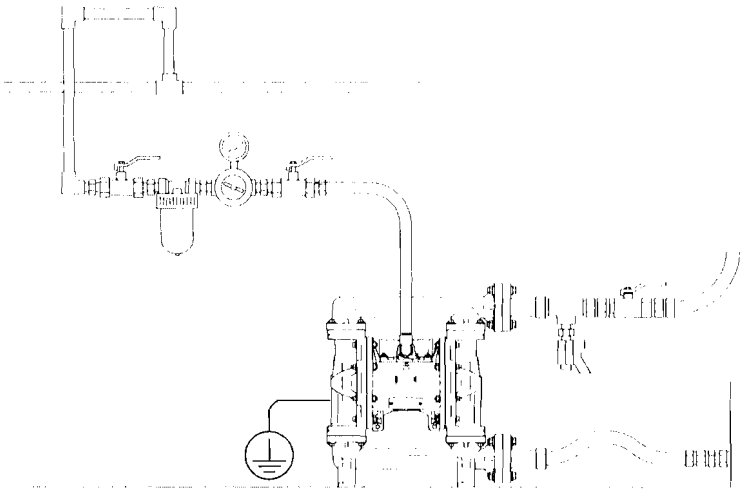

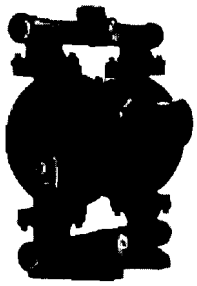
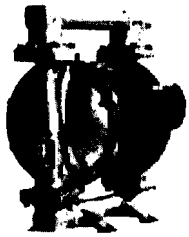
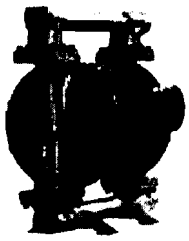

Technical Specifications

Husky 1050 Metal Pumps	Aluminum	Stainless Steel	Hastelloy
Maximum fluid working pressure	125 psi (8.6 bar, 0.86 MPa)	125 psi (8.6 bar, 0.86 MPa)	125 psi (8.6 bar, 0.86 MPa)
Maximum free flow delivery	50 gpm (189 lpm)	50 gpm (189 lpm)	50 gpm (189 lpm)
Maximum pump speed	280 cpm	280 cpm	280 cpm
Displacement per cycle	0.17 gal (0.64 liters)	0.17 gal (0.64 liters)	0.17 gal (0.64 liters)
Maximum suction lift	16 ft (4.9 m) dry, 29 ft (8.8 m) wet	16 ft (4.9 m) dry, 29 ft (8.8 m) wet	16 ft (4.9 m) dry, 29 ft (8.8 m) wet
Maximum size pumpable solids	1/8 in (3.2 mm)	1/8 in (3.2 mm)	1/8 in (3.2 mm)
Sound Power* at 70 psi (4.8 bar, 0.48 MPa) and 50 cpm at 100 psi (7.0 bar, 0.7 MPa) and full flow	 78 dBa 90 dBa	 78 dBa 90 dBa	 78 dBa 90 dBa
Sound Pressure** at 70 psi (4.8 bar, 0.48 MPa) and 50 cpm at 100 psi (7.0 bar, 0.7 MPa) and full flow	 84 dBa 96 dBa	 84 dBa 96 dBa	 84 dBa 96 dBa
Maximum air consumption	67 scfm	67 scfm	67 scfm
Air consumption at 70 psi (4.8 bar, 0.48 MPa),20 gpm (76 lpm)	25 scfm	25 scfm	25 scfm
Air pressure operating range	20-125 psi (1.4-8.6 bar, 0.14-0.86 MPa)	20-125 psi (1.4-8.6 bar, 0.14-0.86 MPa)	20-125 psi (1.4-8.6 bar, 0.14-0.86 MPa)
Air inlet size	1/2 npt(f)	1/2 npt(f)	1/2 npt(f)
Fluid inlet size	1 in npt(f) or 1 in bspt	1 in npt(f) or 1 in bspt	1 in npt(f) or 1 in bspt
Fluid outlet size	1 in npt(f) or 1 in bspt	1 in npt(f) or 1 in bspt	1 in npt(f) or 1 in bspt
Weight	23 lb (10.5 kg)	with conductive polypropylene center 36.3 lb (16.5 kg) with polypropylene center 37.3 lb (16.9 kg) with aluminum center 41.4 lb (18.8 kg)	41 lb (18.6 kg)
Wetted parts	aluminum and material(s) chosen for seat, ball, and diaphragm options	stainless steel and material(s) chosen for seat, ball, and diaphragm options	hastelloy, stainless steel and material(s) chosen for seat, ball, and diaphragm options
Non-wetted Parts Center Bolts	 aluminum coated carbon steel	 polypropylene stainless steel	 aluminum stainless steel	 polypropylene stainless steel
Instruction manual	312877	312877	312877
Repair/parts manual	313435	313435	313435

** Sound power measured per ISO-9614-2. ** Sound pressure was tested 3.28 ft (1 m) from equipment.*

Performance Charts

Husky 1050 Performance

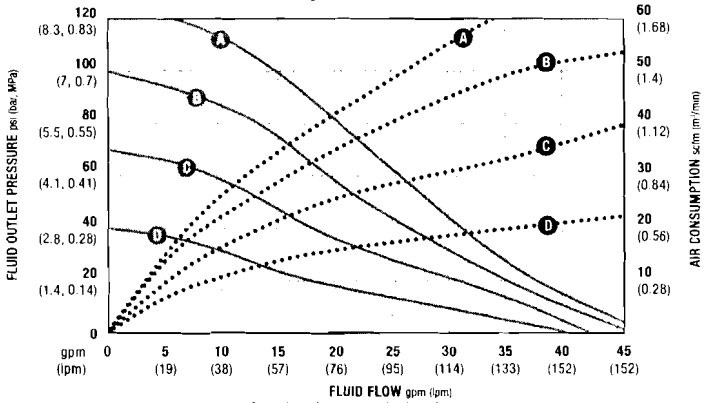

AIR PRESSURE	LEGEND
(A) = at 125 psi (8.3 bar, 0.83 MPa)	Air Consumption ·····
(B) = at 100 psi (7 bar, 0.7 MPa)	Fluid Flow ——
(C) = at 70 psi (4.8 bar, 0.48 MPa)	
(D) = at 40 psi (2.8 bar, 0.28 MPa)	

Husky 1050 Metal Pumps

Dimensions

Aluminum

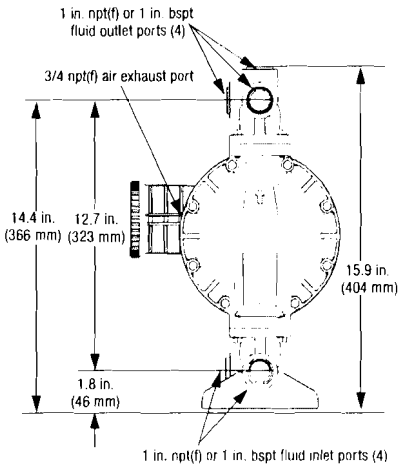

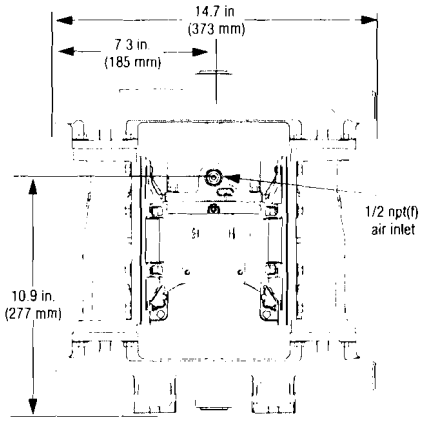

Mounting Pattern

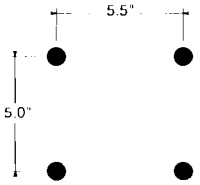

Stainless Steel

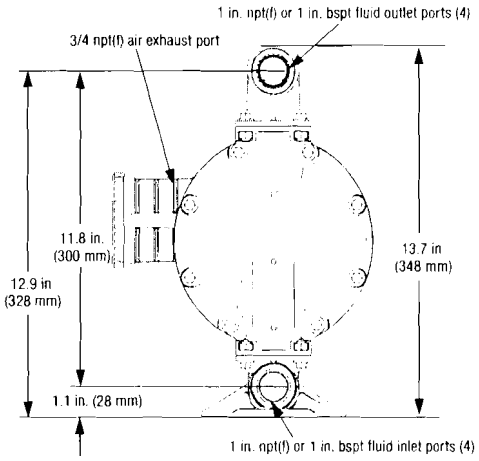

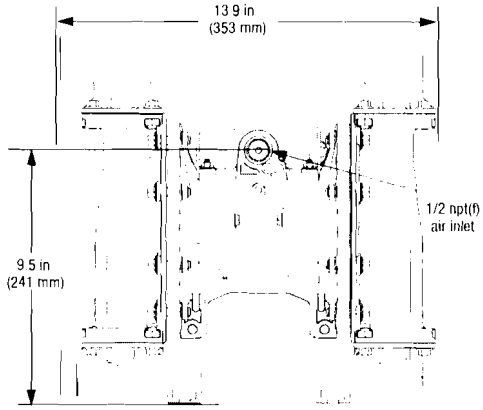

Mounting Pattern

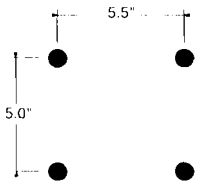

Ordering Information

D	X	X	X	X	X
Diaphragm Pump	Pump Size	Wetted Parts	Seats	Balls/ Checks	Diaphragms

PUMP SIZE (AIR MOTOR TYPE AND MATERIAL)	WETTED PARTS	SEATS	BALLS	DIAPHRAGM
B = 1-1/2" (38.1 mm) Standard: aluminum center section	2 = Poly (npt)	3 = Stainless Steel	1 = PTFE	1 = PTFE
C = 1-1/2" (38.1 mm) Remote: aluminum center section	5 = PVDF (npt)	4 = Hardened SST	2 = Acetal	5 = TPE
T = 1-1/2" (38.1 mm) Standard: stainless steel center section		5 = TPE	4 = Hardened SST	6 = Santoprene
U = 1-1/2" (38.1 mm) Remote: stainless steel center section		6 = Santoprene	5 = TPE	7 = Buna N
		7 = Buna N	6 = Santoprene	8 = Fluoroelastomer
		8 = Fluoroelastomer	7 = Buna N	G = Geolast
		9 = Polypropylene	8 = Fluoroelastomer	
		A = PVDF	G = Geolast	
		G = Geolast		

Popular Models

Material	Part Number (ANSI-Flange) Standard Air Valve	Part Number (ANSI-Flange) Remote* Air Valve	Part Number (BSP Ported) Standard Air Valve	Part Number (BSP Ported) Remote* Air Valve	Materials for Seats	Materials for Balls	Materials for Diaphragms	Fluid Kit	Air Kit	Air Control**
Standard Pumps with Aluminum Center Section										
Polypropylene	DB2311				Stainless Steel	PTFE	PTFE	D0C311	236273	246947
	DB2377	DC2377			Stainless Steel	Buna	Buna	D0C377	236273	246947
	DB2777	DC2777			Buna	Buna	Buna	D0C777	236273	246947
	DB2888	DC2888			Fluoroelastomer	Fluoroelastomer	Fluoroelastomer	D0C888	236273	246947
	DB2911	DC2911			Polypropylene	PTFE	PTFE	D0C911	236273	246947
	DB2955				Polypropylene	TPE	TPE	D0C955	236273	246947
	DB2966				Polypropylene	Santoprene	Santoprene	D0C966	236273	246947
	DB2977				Polypropylene	Buna	Buna	D0C977	236273	246947
	DB2988				Polypropylene	Fluoroelastomer	Fluoroelastomer	D0C988	236273	246947
	DB29GG	DC29GG			Polypropylene	Geolast	Geolast	D0C9GG	236273	246947
PVDF	DB5311				Stainless Steel	PTFE	PTFE	D0C311	236273	246947
	DB5666				Santoprene	Santoprene	Santoprene	D0C666	236273	246947
	DB5811	DC5811			Fluoroelastomer	PTFE	PTFE	D0C811	236273	246947
	DB5888	DC5888			Fluoroelastomer	Fluoroelastomer	Fluoroelastomer	D0C888	236273	246947
	DB5A11	DC5A11			PVDF	PTFE	PTFE	D0CA11	236273	246947
	DB5A88				PVDF	Fluoroelastomer	Fluoroelastomer	D0CA88	236273	246947
Corrosion Resistant Pumps with Stainless Steel Center Section										
Polypropylene	DT2311	DU2311			Stainless Steel	PTFE	PTFE	D0C311	236273	246947
	DT2341	DU2331			Hardened SST	Stainless Steel	PTFE	D0C331	236273	246947
	DT2377	DU2377			Stainless Steel	Buna	Buna	D0C377	236273	246947
	DT2888	DU2888			Fluoroelastomer	Fluoroelastomer	Fluoroelastomer	D0C888	236273	246947
	DT2911	DU2911			Polypropylene	PTFE	PTFE	D0C911	236273	246947
	DT2977	DU2977			Polypropylene	Buna	Buna	D0C977	236273	246947
	DT2988	DU2988			Polypropylene	Fluoroelastomer	Fluoroelastomer	D0C988	236273	246947
PVDF	DT5311	DU5311			Stainless Steel	PTFE	PTFE	D0C311	236273	246947
	DT5811	DU5811			Fluoroelastomer	PTFE	PTFE	D0C811	236273	246947
	DT5888	DU5888			Fluoroelastomer	Fluoroelastomer	Fluoroelastomer	D0C888	236273	246947
	DT5A11	DU5A11			PVDF	PTFE	PTFE	D0CA11	236273	246947
	DT5A88	DU5A88			PVDF	Fluoroelastomer	Fluoroelastomer	D0CA88	236273	246947

*Requires CycleFlo or external valve control

** Air control includes air regulator and filter with gauge

Husky 1590 Plastic Pumps

Technical Specifications

Husky 1590 Plastic Pumps	Polypropylene	PVDF
Maximum fluid working pressure	120 psi (8.4 bar, 0.84 MPa)	120 psi (8.4 bar, 0.84 MPa)
Maximum free flow delivery*	100 gpm (378.5 lpm)	100 gpm (378.5 lpm)
Maximum pump speed	200 cpm	200 cpm
Displacement per cycle**	0.5 gallon (1.96 liter)	0.5 gallon (1.96 liter)
Maximum suction lift (DB2366)	20 ft (6.1 m) dry	20 ft (6.1 m) dry
Maximum size pumpable solids	0.19 in (4.8 mm)	0.19 in (4.8 mm)
Maximum operating temperature***	150°F (65.5°C)	150°F (65.5°C)
Maximum diaphragm operating temperature***		
PTFE	220°F (104.4°C)	220°F (104.4°C)
Santoprene	180°F (82.2°C)	180°F (82.2°C)
Buna-N	180°F (82.2°C)	180°F (82.2°C)
TPE	150°F (65.5°C)	150°F (65.5°C)
Fluoroelastomer	250°F (121.1°C)	250°F (121.1°C)
Geolast	150°F (65.5°C)	150°F (65.5°C)
Typical sound level at 70 psi (4.9 bar, 0.49 MPa) air @ 125 cpm	77 dBa	77 dBa
Maximum air consumption	125 scfm (3.5 m3/min.)	125 scfm (3.5 m3/min.)
Air pressure operating range	20 to 120 psi (1.4 to 8.4 bar, 0.14 to 0.84 MPa)	20 to 120 psi (1.4 to 8.4 bar, 0.14 to 0.84 MPa)
Air inlet size	1/2 npt(f)	1/2 npt(f)
Fluid inlet & outlet size****	1-1/2 in (38.1 mm) ANSI-flange	1-1/2 in (38.1 mm) ANSI-flange
Weight	35 lb (16 kg)	49 lb (22 kg)
Weight with stainless steel center section	48.3 lb (21.9 kg)	62.3 lb (28.2 kg)
Instruction manual	308549	308549

** Flow rates are with muffler and do not vary based on diaphragm material*
*** Displacement per cycle may vary based on suction condition, discharge head, air pressure and fluid type*
**** Actual pump performance may be affected by prolonged usage at temperature*

Performance Charts

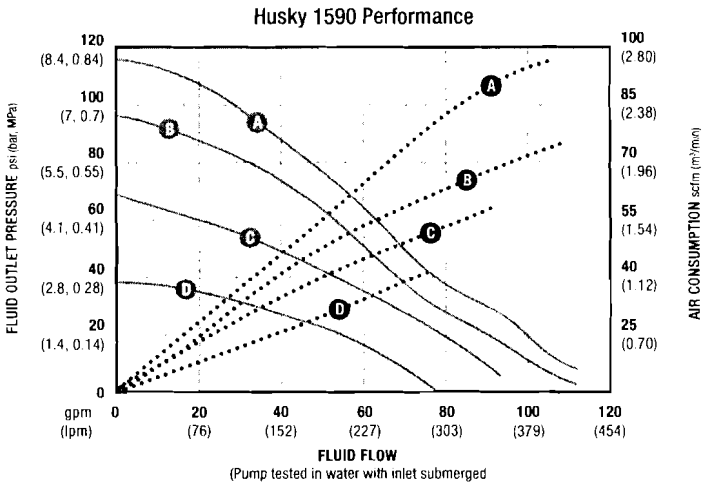

AIR PRESSURE	LEGEND
(A) = at 120 psi (8.4 bar, 0.84 MPa)	Air Consumption ·····
(B) = at 100 psi (7 bar, 0.7 MPa)	Fluid Flow ——
(C) = at 70 psi (4.8 bar, 0.48 MPa)	
(D) = at 40 psi (2.8 bar, 0.28 MPa)	

Dimensions

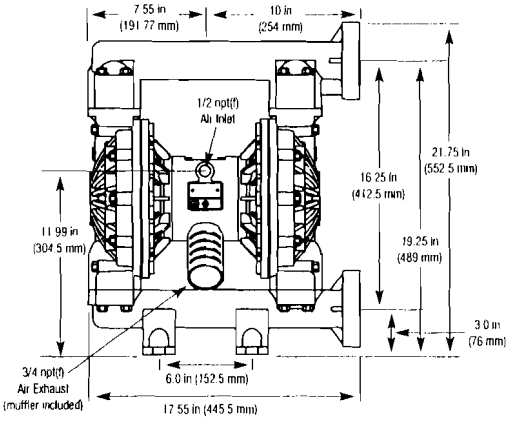

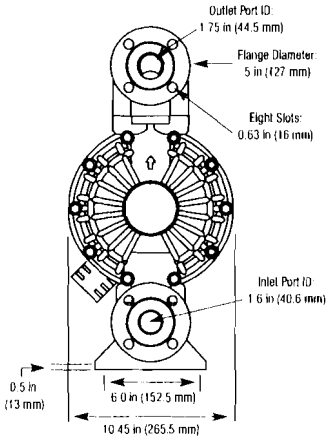

Typical System Drawings

Husky 1590 Above Ground Gravity Feed

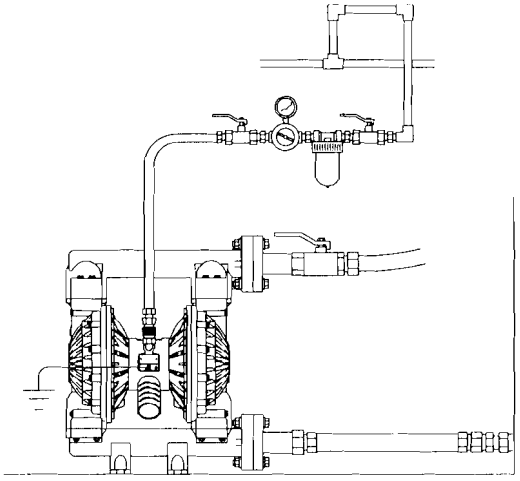

Husky 1590 Metal Pumps
Air-Operated Double Diaphragm

Ordering Information

D	X	X	X	X	X
Diaphragm Pump	Pump Size	Wetted Parts	Seats	Balls/ Checks	Diaphragms

PUMP SIZE (AIR MOTOR TYPE AND MATERIAL)	WETTED PARTS	SEATS	BALLS	DIAPHRAGM
B = 1-1/2" (38.1 mm) Standard: aluminum center section	3 = Aluminum (npt)	3 = Stainless Steel	1 = PTFE	1 = PTFE
C = 1-1/2" (38.1 mm) Remote: aluminum center section	4 = Stainless Steel (npt)	4 = Hardened SST	2 = Acetal	5 = TPE
T = 1-1/2" (38.1 mm) Standard: stainless steel center section	C = Aluminum (bsp)	5 = TPE	4 = Hardened SST	6 = Santoprene
U = 1-1/2" (38.1 mm) Remote: stainless steel center section	D = Stainless Steel (bsp)	6 = Santoprene	5 = TPE	7 = Buna N
		7 = Buna N	6 = Santoprene	8 = Fluoroelastomer
		8 = Fluoroelastomer	7 = Buna N	G = Geolast
		9 = Polypropylene	8 = Fluoroelastomer	
		A = PVDF	G = Geolast	
		G = Geolast		

Popular Models

Material	Part Number (NPT Ported)		Part Number (BSP Ported)		Materials for Seats	Materials for Balls	Materials for Diaphragms	Fluid Kit	Air Kit	Air Control**
	Standard Air Valve	Remote* Air Valve	Standard Air Valve	Remote* Air Valve						
Standard Pumps with Aluminum Center Section										
Aluminum	DB3311	DC3311	DBC311	DCC311	Stainless Steel	PTFE	PTFE	D0B311	236273	246947
	DB3341		DBC341		Hardened SST	Stainless Steel	PTFE	D0B331	236273	246947
	DB3366	DC3366	DBC366	DCC366	Stainless Steel	Santoprene	Santoprene	D0B366	236273	246947
	DB3377	DC3377	DBC377	DCC377	Stainless Steel	Buna	Buna	D0B377	236273	246947
	DB3525	DC3525	DBC525	DCC525	TPE	Acetal	TPE	D0B525	236273	246947
	DB3555		DBC555		TPE	TPE	TPE	D0B555	236273	246947
	DB3666	DC3666	DBC666	DCC666	Santoprene	Santoprene	Santoprene	D0B666	236273	246947
	DB3777	DC3777	DBC777	DCC777	Buna	Buna	Buna	D0B777	236273	246947
	DB3888	DC3888	DBC888	DCC888	Fluoroelastomer	Fluoroelastomer	Fluoroelastomer	D0B888	236273	246947
	DB3GGG	DC3GGG	DBCGGG	DCCGGG	Geolast	Geolast	Geolast	D0BGGG	236273	246947
	DB3911		DBC911		Polypropylene	PTFE	PTFE	D0B911	236273	246947
	DB3977		DBC977		Polypropylene	Buna	Buna	D0B977	236273	246947
Stainless Steel	DB4311	DC4311	DBD311	DCD311	Stainless Steel	PTFE	PTFE	D0B311	236273	246947
	DB4341		DBD341		Stainless Steel	Hardened SST	PTFE	D0B341	236273	246947
	DB4377	DC4377	DBD377	DCD377	Stainless Steel	Buna	Buna	D0B377	236273	246947
	DB4525		DBD525		TPE	Acetal	TPE	D0B525	236273	246947
	DB4666	DC4666	DBD666	DCD666	Santoprene	Santoprene	Santoprene	D0B666	236273	246947
	DB4777	DC4777	DBD777	DCD777	Buna	Buna	Buna	D0B777	236273	246947
	DB4888	DC4888	DBD888	DCD888	Fluoroelastomer	Fluoroelastomer	Fluoroelastomer	D0B888	236273	246947
	DB4GGG	DC4GGG	DBDGGG	DCDGGG	Geolast	Geolast	Geolast	D0BGGG	236273	246947
	DB4911		DBD911		Polypropylene	PTFE	PTFE	D0B911	236273	246947
Corrosion Resistant Pumps with Stainless Steel Center Section										
Stainless Steel	DT4311	DU4311	DTD311	DUD311	Stainless Steel	PTFE	PTFE	D0B311	236273	246947
	DT4377	DU4377	DTD377	DUD377	Stainless Steel	Buna	Buna	D0B377	236273	246947
	DT4388	DU4388	DTD388	DUD388	Stainless Steel	Fluoroelastomer	Fluoroelastomer	D0B388	236273	246947
	DT4666	DU4666	DTD666	DUD666	Santoprene	Santoprene	Santoprene	D0B666	236273	246947
	DT4888	DU4888	DTD888	DUD888	Fluoroelastomer	Fluoroelastomer	Fluoroelastomer	D0B888	236273	246947
	DT4911	DU4911	DTD911	DUD911	Polypropylene	PTFE	PTFE	D0B911	236273	246947

**Requires CycleFlo or external valve control*
*** Air control includes air regulator and filter with gauge*

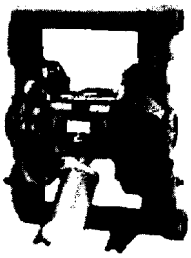

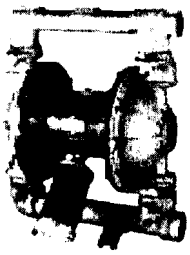

Technical Specifications

Husky 1590 Metal Pumps	Aluminum	Stainless Steel
Maximum fluid working pressure	120 psi (8.4 bar, 0.84 MPa)	120 psi (8.4 bar, 0.84 MPa)
Maximum free flow delivery*	100 gpm (378.5 lpm)	100 gpm (378.5 lpm)
Maximum pump speed	200 cpm	200 cpm
Displacement per cycle**	0.5 gallon (1.96 liter)	0.5 gallon (1.96 liter)
Maximum suction lift (DB2366)	20 ft (6.1 m) dry	20 ft (6.1 m) dry
Maximum size pumpable solids	0.19 in (4.8 mm)	0.19 in (4.8 mm)
Maximum operating temperature***	150°F (65.5°C)	150°F (65.5°C)
Maximum diaphragm operating temperature***		
PTFE	220°F (104.4°C)	220°F (104.4°C)
Santoprene	180°F (82.2°C)	180°F (82.2°C)
Buna-N	180°F (82.2°C)	180°F (82.2°C)
TPE	150°F (65.5°C)	150°F (65.5°C)
Fluoroelastomer	250°F (121.1°C)	250°F (121.1°C)
Geolast	150°F (65.5°C)	150°F (65.5°C)
Typical sound level at 70 psi (4.9 bar, 0.49 MPa) air @ 125 cpm	77 dBa	77 dBa
Maximum air consumption	125 scfm (3.5 m3/min.)	125 scfm (3.5 m3/min.)
Air pressure operating range	20 to 120 psi (1.4 to 8.4 bar, 0.14 to 0.84 MPa)	20 to 120 psi (1.4 to 8.4 bar, 0.14 to 0.84 MPa)
Air inlet size	1/2 npt(f)	1/2 npt(f)
Fluid inlet & outlet size****	1-1/2 npt(f) or bspt(f)	1-1/2 npt(f) or bspt(f)
Weight	33.5 lb (15.2 kg)	85.5 lb (38.6 kg)
Weight with stainless steel center section	n/a	98.8 lb (44.8 kg)
Instruction manual	308441	308441

**Flow rates are with muffler and do not vary based on diaphragm material*
***Displacement per cycle may vary based on suction condition, discharge head, air pressure and fluid type*
**** Actual pump performance may be affected by prolonged usage at temperature*

Husky 1590 Metal Pumps

Performance Charts

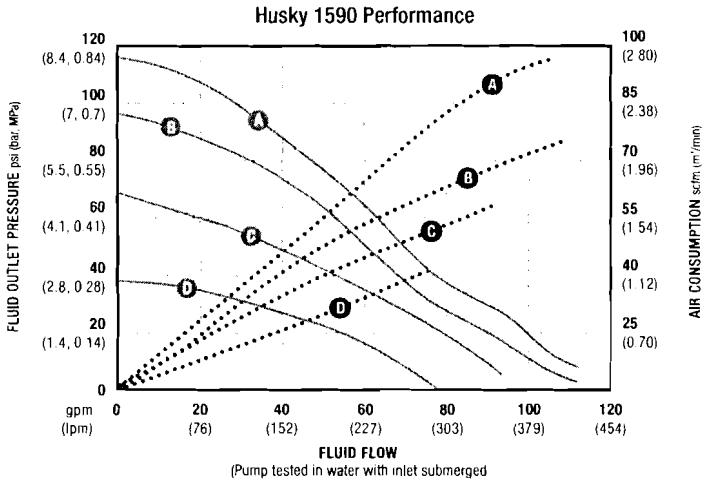

AIR PRESSURE	LEGEND
Ⓐ = at 120 psi (8.4 bar, 0.84 MPa)	Air Consumption ·····
Ⓑ = at 100 psi (7 bar, 0.7 MPa)	Fluid Flow ——
Ⓒ = at 70 psi (4.8 bar, 0.48 MPa)	
Ⓓ = at 40 psi (2.8 bar, 0.28 MPa)	

Dimensions

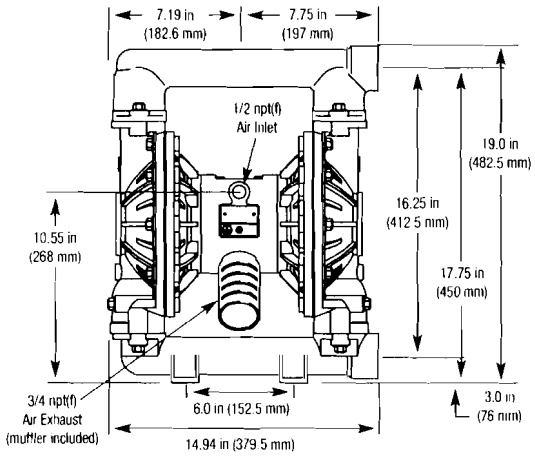

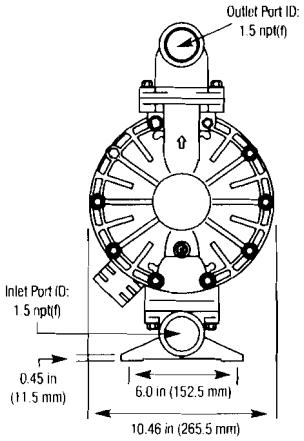

Typical System Drawings

Husky 1590 Above Ground Gravity Feed

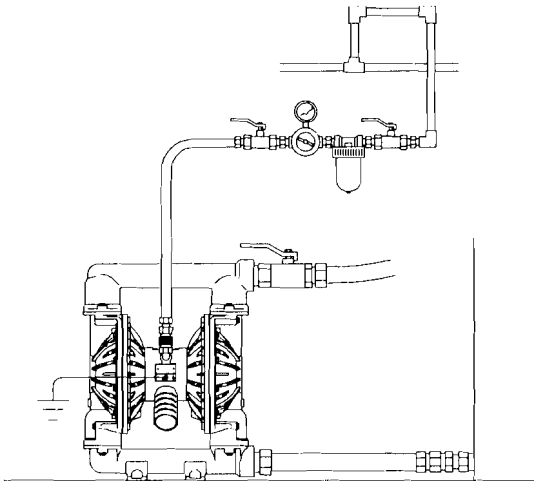

Ordering Information

D	X	X	X	X	X
Diaphragm Pump	Pump Size	Wetted Parts	Seats	Balls/ Checks	Diaphragms

PUMP SIZE (AIR MOTOR TYPE AND MATERIAL)	WETTED PARTS	SEATS	BALLS	DIAPHRAGM
F = 2" (50.8 mm) Standard: aluminum center section	2 = Poly (npt)	3 = Stainless Steel	1 = PTFE	1 = PTFE
G = 2" (50.8 mm) Remote: aluminum center section	5 = PVDF (npt)	4 = Hardened SST	2 = Acetal	5 = TPE
V = 2" (50.8 mm) Standard: stainless steel center section		5 = TPE	4 = Hardened SST	6 = Santoprene
		6 = Santoprene	5 = TPE	7 = Buna N
		7 = Buna N	6 = Santoprene	8 = Fluoroelastomer
		8 = Fluoroelastomer	7 = Buna N	G = Geolast
		9 = Polypropylene	8 = Fluoroelastomer	
		A = PVDF	G = Geolast	
		G = Geolast		

Popular Models

Material	Part Number (ANSI-Flange) Standard Air Valve	Part Number (ANSI-Flange) Remote* Air Valve	Part Number (BSP Ported) Standard Air Valve	Part Number (BSP Ported) Remote* Air Valve	Materials for Seats	Materials for Balls	Materials for Diaphragms	Fluid Kit	Air Kit	Air Control**
Standard Pumps with Aluminum Center Section										
Polypropylene	DF2311				Stainless Steel	PTFE	PTFE	D0G311	236273	246947
	DF2377	DG2377			Stainless Steel	Buna	Buna	D0G377	236273	246947
	DF2777	DG2777			Buna	Buna	Buna	D0G777	236273	246947
	DF2888	DG2888			Fluoroelastomer	Fluoroelastomer	Fluoroelastomer	D0G888	236273	246947
	DF2911	DG2911			Polypropylene	PTFE	PTFE	D0G911	236273	246947
	DF2955				Polypropylene	TPE	TPE	D0G955	236273	246947
	DF2966				Polypropylene	Santoprene	Santoprene	D0G966	236273	246947
	DF2977				Polypropylene	Buna	Buna	D0G977	236273	246947
	DF2988				Polypropylene	Fluoroelastomer	Fluoroelastomer	D0G988	236273	246947
	DF29GG	DG29GG			Polypropylene	Geolast	Geolast	D0G9GG	236273	246947
PVDF	DF5311				Stainless Steel	PTFE	PTFE	D0G311	236273	246947
	DF5666				Santoprene	Santoprene	Santoprene	D0G666	236273	246947
	DF5811	DG5811			Fluoroelastomer	PTFE	PTFE	D0G811	236273	246947
	DF5888	DG5888			Fluoroelastomer	Fluoroelastomer	Fluoroelastomer	D0G888	236273	246947
	DF5A11	DG5A11			PVDF	PTFE	PTFE	D0GA11	236273	246947
	DF5A88				PVDF	Fluoroelastomer	Fluoroelastomer	D0GA88	236273	246947
Corrosion Resistant Pumps with Stainless Steel Center Section										
Polypropylene	DV2311				Stainless Steel	PTFE	PTFE	D0G311	236273	246947
	DV2341				Stainless Steel	Hardened SST	PTFE	D0G341	236273	246947
	DV2377				Stainless Steel	Buna	Buna	D0G377	236273	246947
	DV2888				Fluoroelastomer	Fluoroelastomer	Fluoroelastomer	D0G888	236273	246947
	DV2911				Polypropylene	PTFE	PTFE	D0G911	236273	246947
	DV2977				Polypropylene	Buna	Buna	D0G977	236273	246947
	DV2988				Polypropylene	Fluoroelastomer	Fluoroelastomer	D0G988	236273	246947
	DV2A11				PVDF	PTFE	PTFE	D0GA11	236273	246947
	DV2A88				PVDF	Fluoroelastomer	Fluoroelastomer	D0GA88	236273	246947
PVDF	DV5311				Stainless Steel	PTFE	PTFE	D0G311	236273	246947
	DV5811				Fluoroelastomer	PTFE	PTFE	D0G811	236273	246947
	DV5888				Fluoroelastomer	Fluoroelastomer	Fluoroelastomer	D0G888	236273	246947
	DV5A11				PVDF	PTFE	PTFE	D0GA11	236273	246947
	DV5A88				PVDF	Fluoroelastomer	Fluoroelastomer	D0GA88	236273	246947

Requires CycleFlo or external valve control
*** Air control includes air regulator and filter with gauge*

Husky 2150 Plastic Pumps

Technical Specifications

Husky 2150 Plastic Pumps	Polypropylene	PVDF
Maximum fluid working pressure	120 psi (8.4 bar, 0.84 MPa)	120 psi (8.4 bar, 0.84 MPa)
Maximum free flow delivery*	150 gpm (568 lpm)	150 gpm (568 lpm)
Maximum pump speed	145 cpm	145 cpm
Displacement per cycle**	1.03 gallon (3.90 liter)	1.03 gallon (3.90 liter)
Maximum suction lift	18 ft (5.48 m) wet or dry	18 ft (5.48 m) wet or dry
Maximum size pumpable solids	0.25 in (6.3 mm)	0.25 in (6.3 mm)
Maximum operating temperature***	150°F (65.5°C)	150°F (65.5°C)
Maximum diaphragm operating temperature***		
PTFE	220°F (104.4°C)	220°F (104.4°C)
Santoprene	180°F (82.2°C)	180°F (82.2°C)
Buna-N	180°F (82.2°C)	180°F (82.2°C)
TPE	150°F (65.5°C)	150°F (65.5°C)
Fluoroelastomer	250°F (121.1°C)	250°F (121.1°C)
Geolast	150°F (65.5°C)	150°F (65.5°C)
Typical sound level at 70 psi (4.9 bar, 0.49 MPa) air @ 125 cpm	78 dBa	78 dBa
Maximum air consumption	175 scfm (4.9 m3/min)	175 scfm (4.9 m3/min)
Air consumption at 70 psi/60 gpm	60 scfm (1.7 m3/min)	60 scfm (1.7 m3/min)
Air pressure operating range	20 to 120 psi (1.4 to 8.4 bar, 0.14 to 0.84 MPa)	20 to 120 psi (1.4 to 8.4 bar, 0.14 to 0.84 MPa)
Air inlet size	1/2 npt(f)	1/2 npt(f)
Fluid inlet & outlet size****	2 in (51 mm) ANSI-flange	2 in (51 mm) ANSI-flange
Weight	49 lb (22 kg)	68 lb (30.8 kg)
Weight with stainless steel center section	68.5 lb (31 kg)	87.5 lb (39.6 kg)
Instruction manual	308550	308550

** Flow rates are with muffler and do not vary based on diaphragm material*
*** Displacement per cycle may vary based on suction condition, discharge head, air pressure and fluid type*
**** Actual pump performance may be affected by prolonged usage at temperature*

Performance Charts

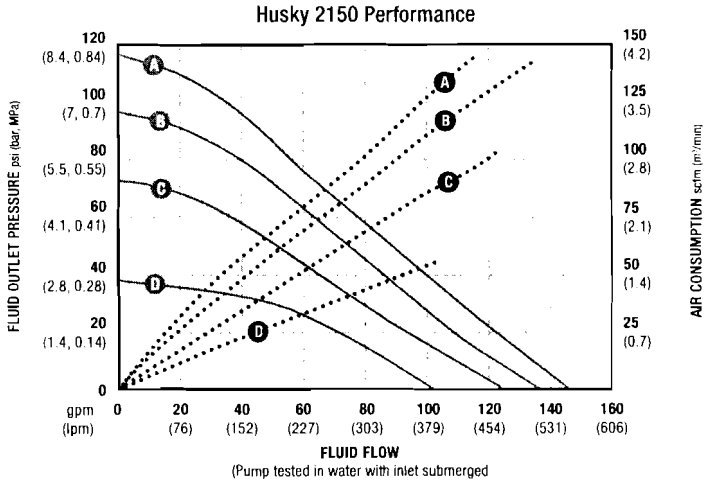

AIR PRESSURE	LEGEND
(A) = at 120 psi (8.4 bar, 0.84 MPa)	Air Consumption ·····
(B) = at 100 psi (7 bar, 0.7 MPa)	Fluid Flow ——
(C) = at 70 psi (4.8 bar, 0.48 MPa)	
(D) = at 40 psi (2.8 bar, 0.28 MPa)	

Dimensions

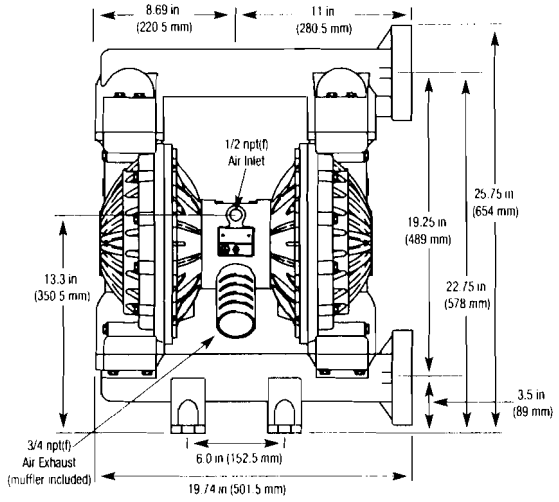

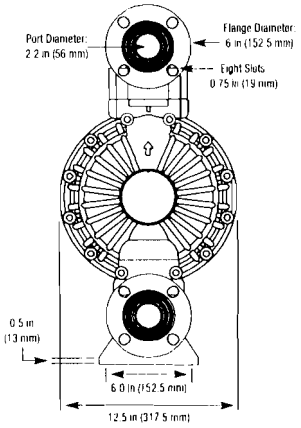

Typical System Drawings

Husky 2150 Above Ground Gravity Feed

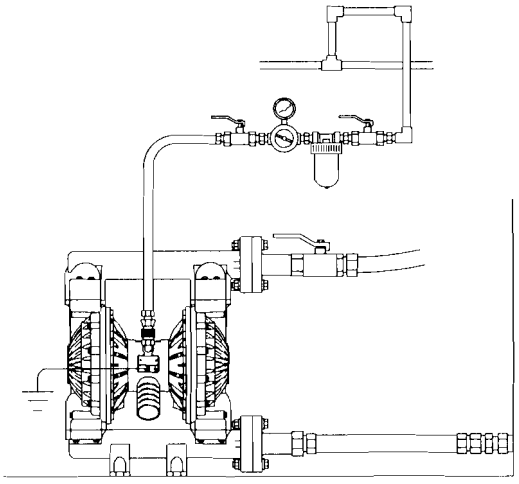

Husky 2150 Metal Pumps
Air-Operated Double Diaphragm

Ordering Information

D	X	X	X	X	X
Diaphragm Pump	Pump Size	Wetted Parts	Seats	Balls/ Checks	Diaphragms

PUMP SIZE (AIR MOTOR TYPE AND MATERIAL)	WETTED PARTS	SEATS	BALLS	DIAPHRAGM
F = 2" (50.8 mm) Standard: aluminum center section	3 = Aluminum (npt)	3 = Stainless Steel	1 = PTFE	1 = PTFE
G = 2" (50.8 mm) Remote: aluminum center section	4 = Stainless Steel (npt)	4 = Hardened SST	2 = Acetal	5 = TPE
V = 2" (50.8 mm) Standard: stainless steel center section	6 = Ductile Iron (npt)	5 = TPE	4 = Hardened SST	6 = Santoprene
	C = Aluminum (bsp)	6 = Santoprene	5 = TPE	7 = Buna N
	D = Stainless Steel (bsp)	7 = Buna N	6 = Santoprene	8 = Fluoroelastomer
	F = Ductile Iron (bsp)	8 = Fluoroelastomer	7 = Buna N	G = Geolast
		9 = Polypropylene	8 = Fluoroelastomer	
	H = 2 npt Alum Extended	A = PVDF	G = Geolast	
	G = 2 bsp Alum Extended	G = Geolast		

Popular Models

Material	Part Number (NPT Ported) Standard Air Valve	Part Number (NPT Ported) Remote* Air Valve	Part Number (BSP Ported) Standard Air Valve	Part Number (BSP Ported) Remote* Air Valve	Materials for Seats	Materials for Balls	Materials for Diaphragms	Fluid Kit	Air Kit	Air Control**
Standard Pumps with Aluminum Center Section										
Aluminum***	DF3311	DG3311	DFC311	DGC311	Stainless Steel	PTFE	PTFE	D0F311	236273	246947
	DF3341	DG3341	DFC341	DGC341	Stainless Steel	Hardened SST	PTFE	D0F341	236273	246947
	DF3366	DG3366	DFC366	DGC366	Stainless Steel	Santoprene	Santoprene	D0F366	236273	246947
	DF3377	DG3377	DFC377	DGC377	Stainless Steel	Buna	Buna	D0F377	236273	246947
	DF3525	DG3525	DFC525	DGC525	TPE	Acetal	TPE	D0F525	236273	246947
	DF3555		DFC555		TPE	TPE	TPE	D0F555	236273	246947
	DF3666	DG3666	DFC666	DGC666	Santoprene	Santoprene	Santoprene	D0F666	236273	246947
	DF3777	DG3777	DFC777	DGC777	Buna	Buna	Buna	D0F777	236273	246947
	DF3888	DG3888	DFC888	DGC888	Fluoroelastomer	Fluoroelastomer	Fluoroelastomer	D0F888	236273	246947
	DF3GGG	DG3GGG	DFCGGG	DGCGGG	Geolast	Geolast	Geolast	D0FGGG	236273	246947
	DF3911	DG3911	DFC911	DGC911	Polypropylene	PTFE	PTFE	D0F911	236273	246947
	DF3977	DG3977	DFC977		Polypropylene	Buna	Buna	D0F977	236273	246947
Stainless Steel	DF4311	DG4311	DFD311	DGD311	Stainless Steel	PTFE	PTFE	D0F311	236273	246947
	DF4341		DFD341		Stainless Steel	Hardened SST	PTFE	D0F341	236273	246947
	DF4366	DG4366	DFD366	DGD366	Stainless Steel	Santoprene	Santoprene	D0F366	236273	246947
	DF4377	DG4377	DFD377	DGD377	Stainless Steel	Buna	Buna	D0F377	236273	246947
	DF4525		DFD525		TPE	Acetal	TPE	D0F525	236273	246947
	DF4666	DG4666	DFD666	DGD666	Santoprene	Santoprene	Santoprene	D0F666	236273	246947
	DF4777	DG4777	DFD777	DGD777	Buna	Buna	Buna	D0F777	236273	246947
	DF4888	DG4888	DFD888	DGD888	Fluoroelastomer	Fluoroelastomer	Fluoroelastomer	D0F888	236273	246947
	DF4GGG	DG4GGG	DFDGGG	DGDGGG	Geolast	Geolast	Geolast	D0FGGG	236273	246947
	DF4911		DFD911		Polypropylene	PTFE	PTFE	D0F911	236273	246947
Ductile	DF6311		DFF311		Stainless Steel	PTFE	PTFE	D0F311	236273	246947
	DF6366		DFF366		Stainless Steel	Santoprene	Santoprene	D0F366	236273	246947
	DF6441		DFF441		Hardened SST	Hardened SST	PTFE	D0F441	236273	246947
	DF6466	DG6466	DFF466	DGF466	Hardened SST	Santoprene	Santoprene	D0F466	236273	246947
	DF6525		DFF525		TPE	Acetal	TPE	D0F525	236273	246947
	DF6666	DG6666	DFF666	DGF666	Santoprene	Santoprene	Santoprene	D0F666	236273	246947
	DF6A11		DFFA11		PVDF	PTFE	PTFE	D0FA11	236273	246947
	DF6A88		DFFA88		PVDF	Fluoroelastomer	Fluoroelastomer	D0FA88	236273	246947
	DF6GGG	DG6GGG	DFFGGG	DGFGGG	Geolast	Geolast	Geolast	D0FGGG	236273	246947
Corrosion Resistant Pumps with Stainless Steel Center Section										
Stainless Steel	DV4311		DVD311		Stainless Steel	PTFE	PTFE	D0F311	236273	246947
	DV4377		DVD377		Stainless Steel	Buna	Buna	D0F377	236273	246947
	DV4388		DVD388		Stainless Steel	Fluoroelastomer	Fluoroelastomer	D0F388	236273	246947
	DV4666		DVD666		Santoprene	Santoprene	Santoprene	D0F666	236273	246947
	DV4888		DVD888		Fluoroelastomer	Fluoroelastomer	Fluoroelastomer	D0F888	236273	246947
	DV4911		DVD911		Polypropylene	PTFE	PTFE	D0F911	236273	246947

*Requires CycleFlo or external valve control. ** Air control includes air regulator and filter with gauge. *** Also available in Extended Height version; use DFH or DFG designations*

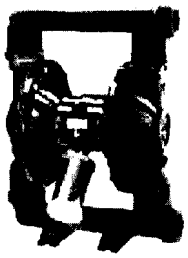

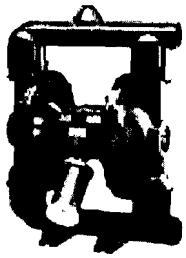

Technical Specifications

Husky 2150 Metal Pumps	Aluminum	Stainless Steel	Ductile Iron
Maximum fluid working pressure	120 psi (8.4 bar, 0.84 MPa)	120 psi (8.4 bar, 0.84 MPa)	120 psi (8.4 bar, 0.84 MPa)
Maximum free flow delivery*	150 gpm (568 lpm)	150 gpm (568 lpm)	150 gpm (568 lpm)
Maximum pump speed	145 cpm	145 cpm	145 cpm
Displacement per cycle**	1.03 gallon (3.90 liter)	1.03 gallon (3.90 liter)	1.03 gallon (3.90 liter)
Maximum suction lift (DF3666)	20 ft (6.1 m) dry	20 ft (6.1 m) dry	20 ft (6.1 m) dry
Maximum size pumpable solids	0.25 in (6.3 mm)	0.25 in (6.3 mm)	0.25 in (6.3 mm)
Maximum diaphragm operating temperature***			
PTFE	220°F (104.4°C)	220°F (104.4°C)	220°F (104.4°C)
Santoprene	180°F (82.2°C)	180°F (82.2°C)	180°F (82.2°C)
Buna-N	180°F (82.2°C)	180°F (82.2°C)	180°F (82.2°C)
TPE	150°F (65.5°C)	150°F (65.5°C)	150°F (65.5°C)
Fluoroelastomer	250°F (121.1°C)	250°F (121.1°C)	250°F (121.1°C)
Geolast	150°F (65.5°C)	150°F (65.5°C)	150°F (65.5°C)
Typical sound level at 70 psi (4.9 bar, 0.49 MPa) air @ 125 cpm	78 dBa	78 dBa	78 dBa
Maximum air consumption	175 scfm (4.9 m3/min)	175 scfm (4.9 m3/min)	175 scfm (4.9 m3/min)
Air pressure operating range	20 to 120 psi (1.4 to 8.4 bar, 0.14 to 0.84 MPa)	20 to 120 psi (1.4 to 8.4 bar, 0.14 to 0.84 MPa)	20 to 120 psi (1.4 to 8.4 bar, 0.14 to 0.84 MPa)
Air inlet size	1/2 npt(f)	1/2 npt(f)	1/2 npt(f)
Fluid inlet & outlet size****	2 in (51 mm) ANSI-flange	2 in (51 mm) ANSI-flange	2 in (51 mm) ANSI-flange
Weight	58 lb (26.3 kg) 62 lb (28.1 kg) - Extended	111 lb (50 kg)	130 lb (59 kg)
Weight with stainless steel center section	n/a	134 lb (60 kg)	n/a
Instruction manual	308368	308368	308368

** Flow rates are with muffler and do not vary based on diaphragm material*
*** Displacement per cycle may vary based on suction condition, discharge head, air pressure and fluid type*
**** Actual pump performance may be affected by prolonged usage at temperature*

Husky 2150 Metal Pumps

Performance Charts

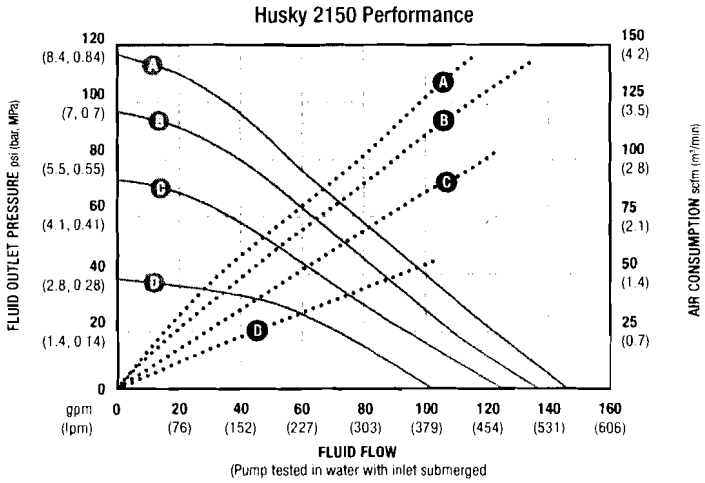

AIR PRESSURE	LEGEND
(A) = at 120 psi (8.4 bar, 0.84 MPa)	Air Consumption ·····
(B) = at 100 psi (7 bar, 0.7 MPa)	Fluid Flow ——
(C) = at 70 psi (4.8 bar, 0.48 MPa)	
(D) = at 40 psi (2.8 bar, 0.28 MPa)	

Dimensions

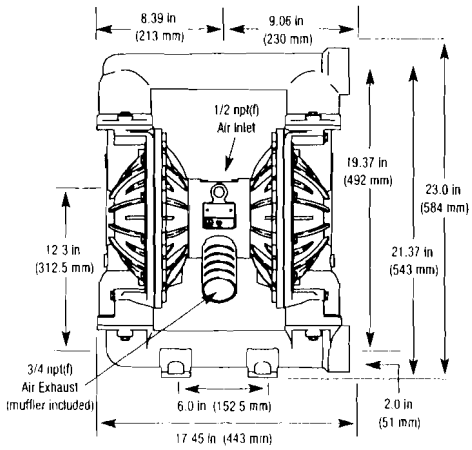

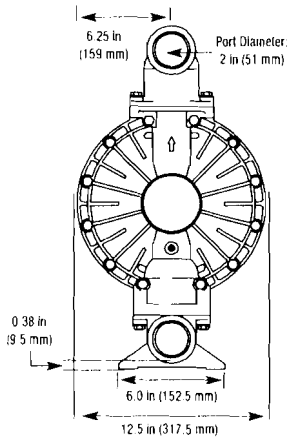

Typical System Drawings

Husky 2150 Above Ground Gravity Feed

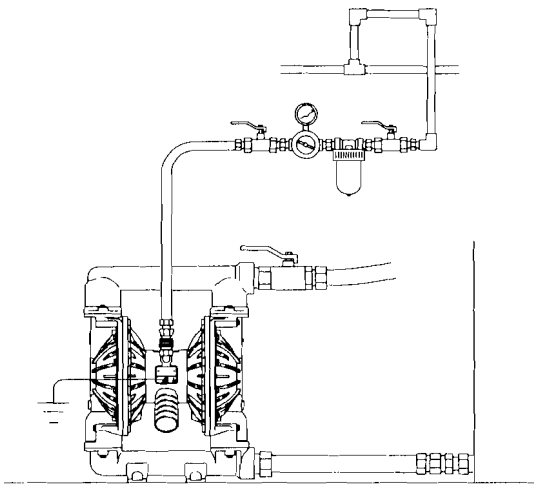

Ordering Information

D	X	X	X	X	X
Diaphragm Pump	Pump Size	Wetted Parts	Seats	Balls/ Checks	Diaphragms

PUMP SIZE (AIR MOTOR TYPE AND MATERIAL)	WETTED PARTS	SEATS	BALLS	DIAPHRAGM
K = 3" (76.2 mm) Standard: aluminum center section	3 = Aluminum (npt)	3 = Stainless Steel	1 = PTFE	1 = PTFE
		5 = TPE	2 = Acetal	5 = TPE
		6 = Santoprene	6 = Santoprene	6 = Santoprene
		G = Geolast	G = Geolast	G = Geolast
				P = Bolt through PTFE

Popular Models

Material	Part Number (NPT Ported) Standard Air Valve	Remote Air Valve	Materials for Seats	Materials for Balls	Materials for Diaphragms	Fluid Kit	Air Kit	Air Control*
Aluminum	DK3311	NA	Stainless Steel	PTFE	PTFE	DOK311	238765	246948
	DK3316	NA	Stainless Steel	PTFE	Santoprene	DOK316	238765	246948
	DK3366	NA	Stainless Steel	Santoprene	Santoprene	DOK366	238765	246948
	DK3515	NA	TPE	PTFE	TPE	DOK515	238765	246948
	DK3525	NA	TPE	Acetal	TPE	DOK525	238765	246948
	DK3565	NA	TPE	Santoprene	TPE	DOK565	238765	246948
	DK3611	NA	Santoprene	PTFE	PTFE	DOK611	238765	246948
	DK3616	NA	Santoprene	PTFE	Santoprene	DOK616	238765	246948
	DK3666	NA	Santoprene	Santoprene	Santoprene	DOK666	238765	246948
	DK3GG6	NA	Geolast	Geolast	Santoprene	DOKGG6	238765	246948
	DK3GGG	NA	Geolast	Geolast	Geolast	DOKGGG	238765	246948

** Air control includes air regulator and filter with gauge*

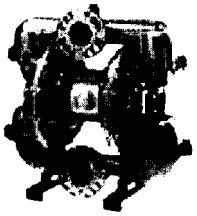

Technical Specifications

Husky 3275 Aluminum Pumps	Aluminum
Maximum fluid working pressure	120 psi (8.4 bar, 0.84 MPa)
Maximum free flow delivery*	275 gpm (1,041 lpm)
Maximum pump speed	135 cpm
Displacement per cycle**	2.0 gallon (7.6 liter)
Maximum suction lift (DF3666)	8 ft (2.4 m) dry
Maximum size pumpable solids	0.38 in (9.4 mm)
Maximum diaphragm operating temperature***	
PTFE	220°F (104.4°C)
Santoprene	180°F (82.2°C)
TPE	150°F (65.5°C)
Fluoroelastomer	250°F (121.1°C)
Geolast	150°F (65.5°C)
Typical sound level at 70 psi (4.9 bar, 0.49 MPa) air @ 125 cpm	79 dBa
Maximum air consumption	325 scfm (9.1 m3/min)
Air consumption at 70 psi (4.7 bar, 0.47 MPa)/100 gpm (379 lpm)	120 scfm (1.26 m3/min)

Husky 3275 Aluminum Pumps	Aluminum
Air pressure operating range	20 to 120 psi (1.4 to 8.4 bar, 0.14 to 0.84 MPa)
Air inlet size	3/4 npt(f)
Fluid inlet & outlet size****	3 in (76.2 mm) ANSI 4 bolt flange/ DIN 8-bolt flange internal thread is 3 npt or bspt
Weight	150 lb (68 kg)
Instruction manual	308639

** Flow rates are with muffler and do not vary based on diaphragm material*
*** Displacement per cycle may vary based on suction condition, discharge head, air pressure and fluid type*
**** Actual pump performance may be affected by prolonged usage at temperature*

Husky 3275 Aluminum Pumps

Performance Charts

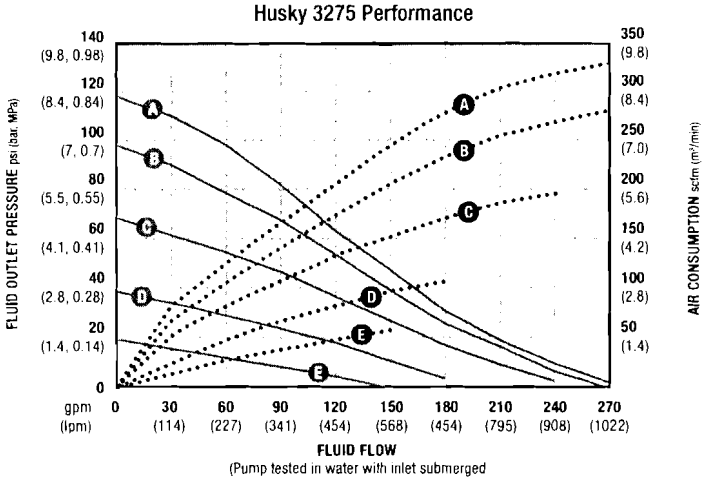

AIR PRESSURE	LEGEND
Ⓐ = at 120 psi (8.4 bar, 0.84 MPa)	Air Consumption ·····
Ⓑ = at 100 psi (7 bar, 0.7 MPa)	Fluid Flow ——
Ⓒ = at 70 psi (4.8 bar, 0.48 MPa)	
Ⓓ = at 40 psi (2.8 bar, 0.28 MPa)	
Ⓔ = at 20 psi (1.4 bar, 0.14 MPa)	

Dimensions

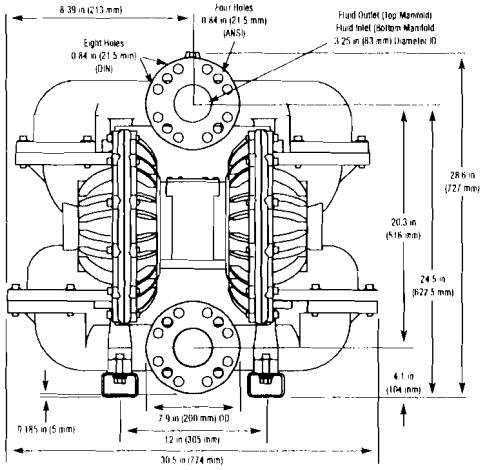

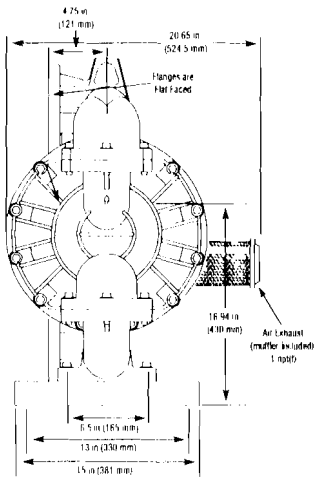

Typical System Drawings

Husky 3275 Above Ground Gravity Feed

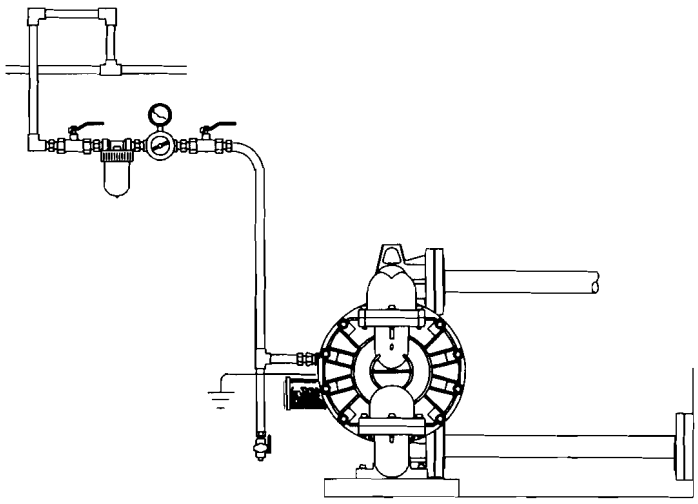

Ordering Information

PART NUMBER	CONSTRUCTION	PACKING
226940	Drum/CS/SST (UL, CE)	T&L
226941	Drum/CS/SST (UL, CE)	PE
226942	Drum/SST (UL, CE)	PE
226943	Stubby/CS/SST (UL, CE)	L
226944	Stubby/CS/SST (UL, CE)	PE
226945	Stubby/SST (UL, CE)	PE
226946	Drum/CS/SST (CE)	T
237129	Drum/SST (CE)	T
237130	Stubby/CS (CE)	L
237131	Stubby/CS (CE)	T
237132	Stubby/CS (CE)	T
237133	Drum/CS (CE)	L
237134	Drum/CS (CE)	T

N = Neoprene
L = Leather
T = PTFE

SST = 304 Stainless Steel
CS = Carbon Steel
PE = Polyethylene

Dimensions

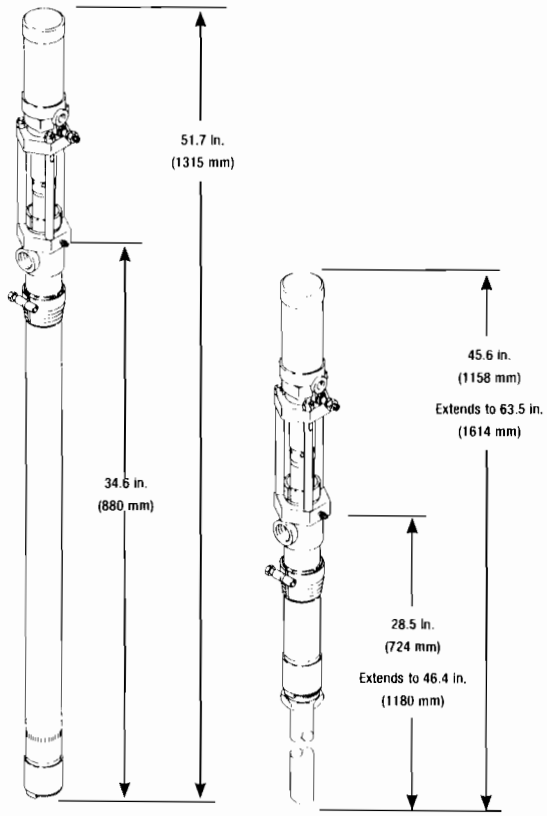

Technical Specifications

Fast-Flo 1:1	Priming Piston
Maximum fluid working pressure	180 psi (12.4 bar, 1.24 MPa)
Maximum pump speed	100 cpm
Pump cycles per gallon (3.8 l)	25
Maximum air input pressure	180 psi (12.4 bar, 1.24 MPa)
Maximum operating temperature	120°F (49°C)
Typical sound level	72 dBa
Air inlet	1/4 npt (f)
Fluid outlet	3/4 npt (f)
Weight	20 lbs (9.07 kg) Drum; 11 lbs (4.99 kg) Stubby
Instruction Manual	307427

Ordering Information

Wall Mount Hydra-Clean Package

PACKAGE ORDER NO.	247550	247552	247554	258665	Pump Package
Air Motor Part No.	N34DN0	N65DN0	N65DN0	N65DN0	
Pump Lower Part No.	247599	241648	687055	24B923	
Pump Construction	SST	SST	SST	SST	
Standard Seal Repair Kit	247881	222880	See manual 311825	24C162	
Standard Seal Construction	PTFE/ CF-PTFE	UHMWPE/ CF-PTFE	UHMWPE/ CF-PTFE	UHMWPE/ CF-PTFE	
Optional Seal Repair Kits	207581	222875	222845	237713	
Optional Seal Construction	PTFE	UHMWPE/PTFE	UHMWPE/PTFE	UHMWPE/PTFE	
Flyer	338026	338026	338026	338026	
Instruction Manual	312585	312585	312585	312585	

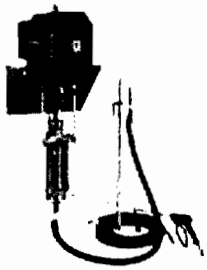

Cart Mount Hydra-Clean Package

Package Order No.	247549	247551	247553	258664	Pump Package
Air Motor Part No.	N34DN0	N65DN0	N65DN0	N65DN0	
Pump Lower Part No.	247599	241648	687055	24B923	
Pump Construction	SST	SST	SST	SST	
Standard Seal Repair Kit	247881	222880	See manual 311825	24C162	
Standard Seal Construction	PTFE/ CF-PTFE	UHMWPE/ CF-PTFE	UHMWPE/ CF-PTFE	UHMWPE/ CF-PTFE	
Optional Seal Repair Kits	207581	222875	222845	237713	
Optional Seal Construction	PTFE	UHMWPE/PTFE	UHMWPE/PTFE	UHMWPE/PTFE	
Flyer	338026	338026	338026	338026	
Instruction Manual	312585	312585	312585	312585	

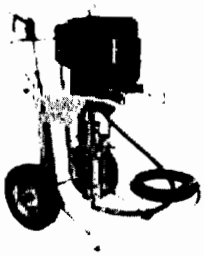

Drum Mount Hydra-Clean Package

Package Order No.	206515	Pump Package
Air Motor Part No.	207352	
Pump Lower Part No.	224344	
Pump Construction	SST	
Standard Seal Repair Kit	224402	
Standard Seal Construction	UHMWPE/Polychloroprene	
Optional Seal Construction	UHMWPE/PTFE	
Instruction Manual	306817	

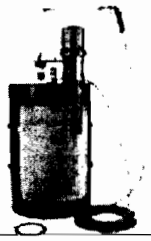

Technical Specifications

Part Number	Pump Package	Max. Working Pressure psi (bar, MPa)	Max. Air Input Pressure psi (bar, MPa)	Fluid Flow at 60 cpm gpm (lpm)	Vol. per Cycle oz (cc)	Air Inlet Size	Fluid Inlet Size	Fluid Outlet Size*	Flyer	Manual
247549	12:1 Cart Mount	1250 (86, 8.6)	100 (7, 0.7)	8.7 (33.0)	18.6 (550)	3/4 npt(f)	1 in	3/8 in	338026	312585
247550	12:1 Wall Mount	1250 (86, 8.6)	100 (7, 0.7)	8.7 (33.0)	18.6 (550)	3/4 npt(f)	1 in	3/8 in	338026	312585
247551	23:1 Cart Mount	2275 (157, 15.7)	100 (7, 0.7)	9.2 (34.7)	19.6 (580)	3/4 npt(f)	1 in	3/8 in	338026	312585
247552	23:1 Wall Mount	2275 (157, 15.7)	100 (7, 0.7)	9.2 (34.7)	19.6 (580)	3/4 npt(f)	1 in	3/8 in	338026	312585
247553	30:1 Cart Mount	3065 (211, 21.1)	100 (7, 0.7)	6.8 (25.9)	14.5 (430)	3/4 npt(f)	1 in	3/8 in	338026	312585
247554	30:1 Wall Mount	3065 (211, 21.1)	100 (7, 0.7)	6.8 (25.9)	14.5 (430)	3/4 npt(f)	1 in	3/8 in	338026	312585
258664	45:1 Cart Mount	4500 (310, 31.0)	100 (7, 0.7)	4.6 (17.4)	9.8 (290)	3/4 npt(f)	1 in	3/8 in	338026	312585
258665	45:1 Wall Mount	4500 (310, 31.0)	100 (7, 0.7)	4.6 (17.4)	9.8 (290)	3/4 npt(f)	1 in	3/8 in	338026	312585
206515	10:1 Drum Mount	1800 (125, 12.5)	180 (12.5, 1.2)	3.0 (11.4)	6.4 (189)	1/2 npt(f)	1/2 in	3/4 in	—	306817

**Includes two outlet ports per unit*

Accessories

Guns and Wands

247879 Replacement gun/wand
15T283 Brass/stainless spray gun
15T282 Stainless steel spray gun
15T279 32 inch stainless steel wand
15T280 10 inch stainless steel wand
247880 Gun stainless steel connections
247622 Gun and suction tube holder

Hoses

214959 1 in x 6 ft inlet hose
247878 3/8 in x 50 ft outlet hose: 4500 psi

Other

15T284 60 mesh inlet strainer with 1" NPT(f) connection
15T284 60 mesh inlet strainer with 1" NPT(f) connection
191635 0 mesh inlet strainer with 1" NPT(f) connection

Stainless Steel Tips

Part Number	Orifice Size in (mm)	Fan Width Angle at 40 psi (3 bar, 0.03 MPa)	Capacity at 1000 psi (68.9 bar, 6.89 MPa) GPM (lpm)
805534	0.020 (0.51)	40°	1.00 (3.78)
805538*	0.030 (0.76)	40°	1.50 (5.68)
805542	0.035 (0.89)	40°	1.75 (6.62)
805549*	0.045 (1.14)	25°	2.25 (8.52)
805561	0.060 (1.52)	25°	3.00 (11.36)
805566*	0.065 (1.65)	40°	3.25 (12.30)
805569	0.070 (1.78)	25°	3.50 (13.25)
805574	0.075 (1.91)	40°	3.75 (14.20)
805575*	0.080 (2.03)	0°	4.00 (15.14)
805584	0.090 (2.28)	15°	4.50 (17.03)
805587	0.100 (2.54)	0°	5.00 (18.93)

Other orifice sizes and fan widths available from Graco, contact a sales representative for more information.

Hydra-Clean Pressure Washers

Dimensions

Wall Mount Package 247550

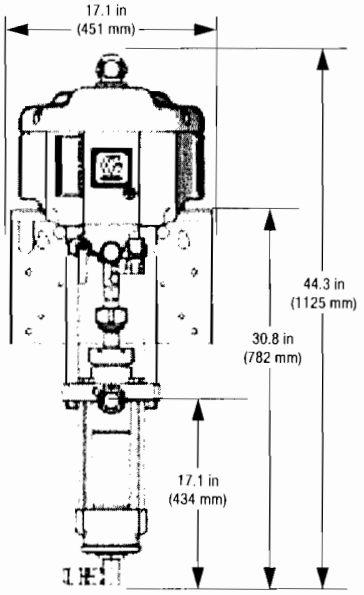

Cart Mount Package 247549

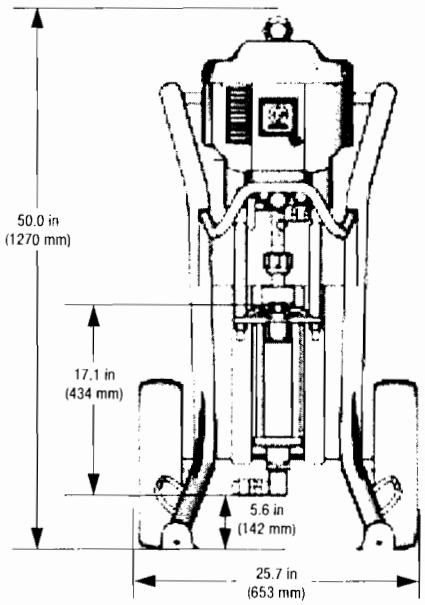

Refer to manual 312585 for additional package dimensions

Ordering Information

		Pump Components				Drum Kit Components			
PACKAGE NUMBER	**PUMP TYPE**	**PUMP NUMBER***	**SEATS**	**BALLS**	**DIAPHRAGMS**	**DRUM KIT NUMBER****	**TUBE MATERIAL**	**TUBE PART NUMBER**	**EASY OUT SEAL AND MOUNTING BASE**
233051	Husky 515 Polypropylene	241565	Polypropylene	PTFE	PTFE	233045	Polypropylene	196096	233073
233052	Husky 515 Acetal	241564	Acetal	PTFE	PTFE	233047	Stainless Steel	196094	233074
233053	Husky 515 Acetal	241564	Acetal	PTFE	PTFE	233046	Aluminum	195095	233074
233054	Husky 716 Aluminum	243305	Acetal	Santoprene	Santoprene	233046	Aluminum	196095	233074
233055	Husky 716 Aluminum	243306	Acetal	Buna	Buna	233046	Aluminum	196095	233074
233056	Husky 716 Aluminum	243307	Acetal	PTFE	PTFE	233046	Aluminum	196095	233074
233057	Husky 716 Stainless Steel	D54311	Stainless Steel	PTFE	PTFE	233048	Stainless Steel	196094	233076

Accessories

246946 Air Regulator/Filter
208536 Air Line Quick Coupler
169970 Quick Coupler Nipple

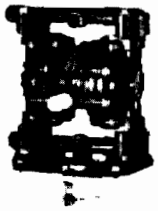

Technical Specifications

Husky 55 gal Transfer Pump	Acetal Husky 515		Polypropylene Husky 515	Aluminum Husky 716	Stainless Steel Husky 716	
Maximum fluid working pressure	100 psi (7 bar, 0.7 MPa)		100 psi (7 bar, 0.7 MPa)	100 psi (7 bar, 0.7 MPa)	100 psi (7 bar, 0.7 MPa)	
Maximum free flow delivery*	12 gpm (57 lpm)		12 gpm (57 lpm)	14 gpm (61 lpm)	14 gpm (61 lpm)	
Maximum pump speed	400 cpm		400 cpm	400 cpm	400 cpm	
Displacement per cycle**	0.04 gallon (0.15 liter)		0.04 gallon (0.15 liter)	0.04 gallon (0.15 liter)	0.04 gallon (0.15 liter)	
Maximum size pumpable solids	0.094 in (2.5 mm)		0.094 in (2.5 mm)	0.094 in (2.5 mm)	0.094 in (2.5 mm)	
Typical sound level at 70 psi (4.9 bar, 0.49 MPa) air @ 125 cpm	67 dBa		67 dBa	67 dBa	67 dBa	
Maximum air consumption	28 scfm (0.672 m3/min)		28 scfm (0.672 m3/min)	28 scfm (0.672 m3/min)	28 scfm (0.672 m3/min)	
Air pressure operating range	25 to 100 psi (1.8 to 7 bar, 0.18 to 0.7 MPa)		25 to 100 psi (1.8 to 7 bar, 0.18 to 0.7 MPa)	25 to 100 psi (1.8 to 7 bar, 0.18 to 0.7 MPa)	25 to 100 psi (1.8 to 7 bar, 0.18 to 0.7 MPa)	
Air inlet size	1/4 npt(f)		1/4 npt(f)	1/4 npt(f)	1/4 npt(f)	
Air exhaust port size	3/8 npt(f)		3/8 npt(f)	3/8 npt(f)	3/8 npt(f)	
Fluid inlet size	3/4 npt(f)		3/4 npt(f)	3/4 npt(f)	3/4 npt(f)	
Fluid outlet size	1/2 and 3/4 npt(f)		1/2 and 3/4 npt(f)	3/4 npt(f)	3/4 npt(f)	
Wetted parts (fluid covers and manifolds)	groundable acetal, PTFE		polypropylene, PTFE	aluminum, stainless steel, PTFE, zinc-plated steel	stainless steel, PTFE	
Pump weight	7.8 lb (3.5 kg)		6.5 lb (2.9 kg)	8.5 lb (3.9 kg)	18 lb (8.2 kg)	
Drum package weight tube material	12.3 lb (5.6 kg) aluminum	14.3 lb (6.5 kg) stainless steel	10.5 lb (4.8 kg) polypropylene	13.0 lb (5.9 kg) aluminum	27.5 lb (12.5 kg) stainless steel	
Drum kit weight easy-out seal material	4.5 lb (2.0 kg) aluminum	6.5 lb (2.9 kg) stainless steel	4.0 lb (1.8 kg) polypropylene	4.5 lb (2.0 kg) acetal	6.5 lb (2.9 kg) acetal	9.5 lb (4.3 kg) stainless steel
Drum package instruction manual	309116		309116	309116	309116	
Instruction manual	308981		308981	308981	308981	

** Flow rates are with muffler and do not vary based on diaphragm material*
*** Displacement per cycle may vary based on suction condition, discharge head, air pressure and fluid type*

Husky Transfer Pump Packages

Dimensions

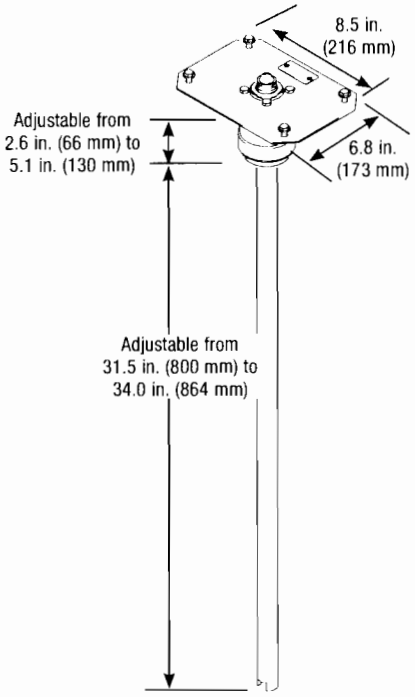

Poly, Acetal and Aluminum Pumps

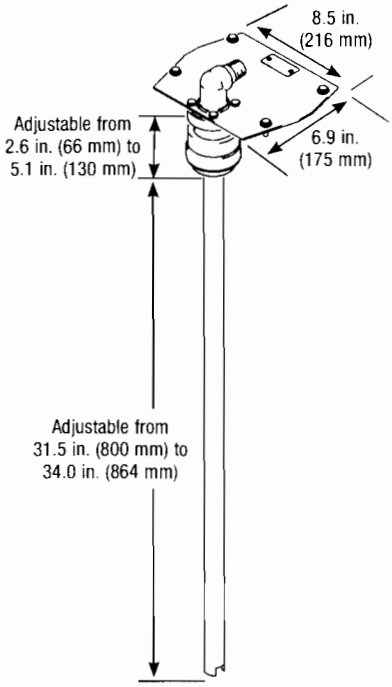

Stainless Steel Pumps

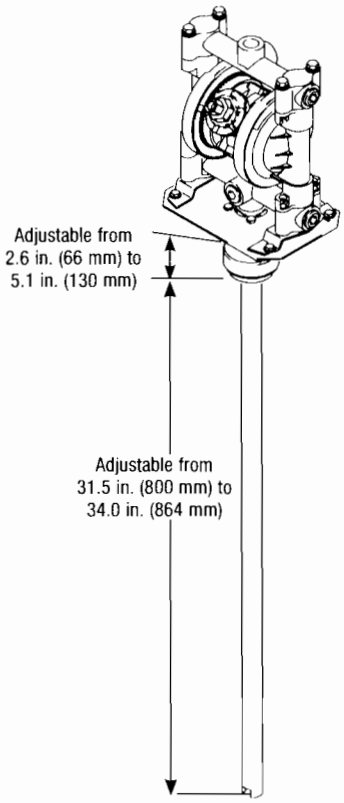

Overall height depends on pump.
See page 12 or 15 for pump dimensions

Ordering Information

195264 CycleFlo Pneumatic pump controller, 120V
196706 CycleFlo Pneumatic pump controller, 240V
195265 CycleFlo II Pneumatic pump controller, 120V
309003 CycleFlo Instruction Manual
309004 CycleFlo II Instruction Manual

Product Selector

Highlighted areas indicate the different sizes of remote pumps and available materials of construction for seats, balls and diaphragms that can be used with the CycleFlo and CycleFlo II controller.

PUMP SIZE (AIR MOTOR TYPE AND MATERIAL)	WETTED PARTS	SEATS	BALLS	DIAPHRAGM
2 = 1/4" (6.35 mm) Remote: polypropylene center section	1 = Acetal (npt)	0 = Seat with ball	1 = PTFE	1 = PTFE
4 = 1/2" (12.7 mm) Remote: polypropylene center section	2 = Poly (npt)	2 = Acetal	2 = Acetal	5 = TPE
4 = 3/4" (19.05 mm) Remote: polypropylene center section	3 = Aluminum (npt)	3 = Stainless Steel	3 = Stainless Steel	6 = Santoprene
8 = 1" (25.4 mm) Remote: aluminum center section	4 = Stainless Steel (npt)	4 = Hardened SST	4 = Hardened SST	7 = Buna N
S = 1" (25.4 mm) Remote: stainless steel center section	5 = PVDF (npt)	5 = TPE	5 = TPE	8 = Fluoroelastomer
C = 1-1/2" (38.1 mm) Remote: aluminum center section	6 = Ductile Iron (npt)	6 = Santoprene	6 = Santoprene	G = Geolast
U = 1-1/2" (38.1 mm) Remote: stainless steel center section		7 = Buna N	7 = Buna N	
G = 2" (50.8 mm) Remote: aluminum center section	A = Acetal * (bsp)	8 = Fluoroelastomer	8 = Fluoroelastomer	
W = 2" (50.8 mm) Remote: stainless steel center section	B = Poly * (bsp)	9 = Polypropylene	9 = Polypropylene	
	C = Aluminum (bsp)	A = PVDF	A = PVDF	
	D = Stainless Steel (bsp)	G = Geolast	G = Geolast	
	E = PVDF (bsp)			
	F = Ductile Iron (bsp)	B = SST with viton seal		
		C = Santoprene with viton seal		
	H = 2 npt Alum Extended			
	G = 2 bsp Alum Extended			
		D = Urethane Duckbill		

Mounting Dimensions

CycleFlo

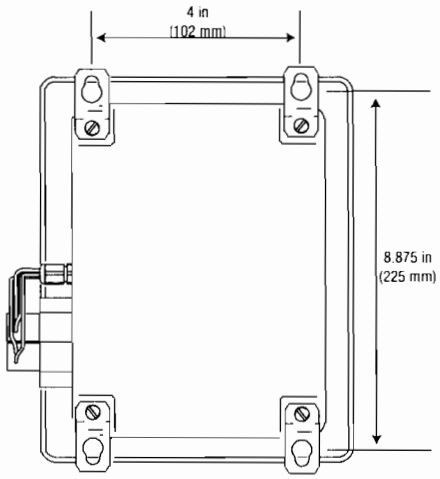

CycleFlo II

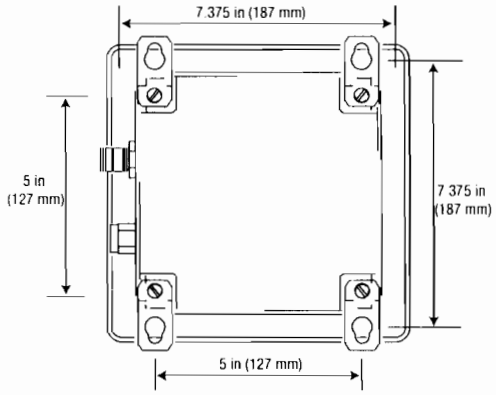

How To Determine The Best Remote Pump:

1. Configure the best seat, ball and diaphragm combination, as well as fluid wetted parts, based on material compatibility and application requirements.
   - If the material is a mild acid, the choice could be a DX2911.
2. Determine dispense time and volume accuracy.
   - In two minutes, 50 gallons need to be dispensed ±5% accuracy
3. Use the displacement volume chart below to choose the pump size with an outlet volume/cycle that is most closely divisible into your required flow.*
   - Husky 1590 produces .5 gal/cycle
   - Husky 2150 produces 1.03 gal/cycle

	Husky 205	Husky 515	Husky 716	NEW Husky 1050	Husky 1590	Husky 2150
Volume/cycle	1/4 in	1/2 in	3/4 in	1 in	1-1/2 in	2 in
Cubic centimeters (cc)	46	150	150	**644**	1960	3000
Liters	0.05	0.15	0.15	**0.64**	1.96	3.9
Grams (assumes s.g =1.0)	46	150	150	**644**	1960	3900
Kilograms (kg)	0.05	0.15	0.15	**0.64**	1.96	3.9
Gallons	0.01	0.04	0.04	**0.17**	0.50	1.03
Quarts	0.05	0.16	0.16	**0.68**	2.0	4.12
Pints	0.1	0.32	0.32	**1.36**	4.0	8.24
Ounces	1.54	5.12	5.12	**21.8**	64.0	131.84
Cubic inch	2.77	9.24	9.24	**39.27**	115.5	237.93

4. Determine the number of cycles required. Calculate the dispense time by dividing required flow by outlet volume per cycle.
   - Husky 1590 = 50 gal/0.5 gal/cycle = 100 cycles
   - Husky 2150 = 50 gal/1.03 gal/cycle = 48.55 cycles
5. Determine if cycle output is within the dispense accuracy required.
   - Husky 2150 requires 48.55 cycles to pump 50 gallons. Only full cycles are possible, so either 48 or 49 cycles can be counted. At the 48 cycle count, dispense would be 49.44 gallons. At the 49 cycle count, dispense would be 50.47 gallons.
   - Husky 1590 requires 100 cycles to pump 50 gallons. No partial cycles required.
6. After determining the best size, use the pump ordering matrix to decide which remote center section is most suitable for the application – DC2911 (aluminum center section) or DU5911 (stainless steel center section).
   - Since a mild acid is being pumped, DC2911, an aluminum center section would be the best choice.

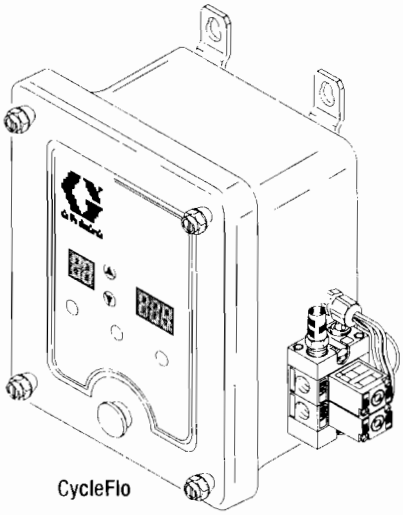

CycleFlo

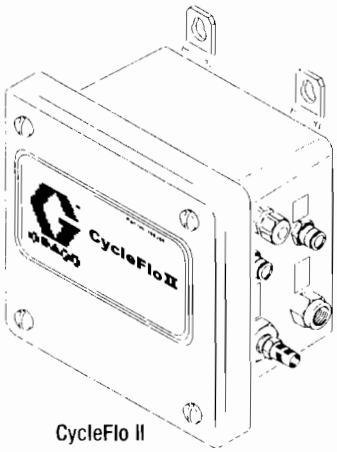

CycleFlo II

* Displacement values are estimates based on average running conditions.

Ordering Information

Husky 750, 3/4 in npt(f) Surge Suppressors

Automatic	Polypropylene wetted bottom housing and non-wetted top housing	Stainless Steel wetted bottom housing and non-wetted top housing	Acetal wetted bottom housing and non-wetted top housing
Weight	9 lb (4.1 kg)	16 lb (7.3 kg)	9 lb (4.1 kg)
Suppressor with Buna-N bladder	239096	239095	239094
Suppressor with PTFE bellows	239121	239123	239125
Suppressor with Fluoroelastomer bladder	239122	239124	n/a
Adjustable	**Polypropylene** wetted bottom housing and non-wetted top housing	**Stainless Steel** wetted bottom housing and non-wetted top housing	**Acetal** wetted bottom housing and non-wetted top housing
Weight	9 lb (4.1 kg)	16 lb (7.3 kg)	9 lb (4.1 kg)
Suppressor with Buna-N bladder	239091	239090	239089
Suppressor with PTFE bellows	239129	239131	239133
Suppressor with Fluoroelastomer bladder	239130	239132	n/a

Husky 2000, 2 in npt(f) Surge Suppressors

Automatic	Polypropylene wetted bottom housing and non-wetted top housing	Stainless Steel wetted bottom housing, polypropylene non-wetted top housing
Weight	18 lb (8.2 kg)	36 lb (16.3 kg)
Suppressor with Buna-N bladder	239092	239093
Suppressor with PTFE bellows	239128	239126
Suppressor with Fluoroelastomer bladder	n/a	239127
Adjustable	**Polypropylene** wetted bottom housing and non-wetted top housing	**Stainless Steel** wetted bottom housing, polypropylene non-wetted top housing
Weight	18 lb (8.2 kg)	36 lb (16.3 kg)
Suppressor with Buna-N bladder	239087	239088
Suppressor with PTFE bellows	239136	239134
Suppressor with Fluoroelastomer bladder	n/a	239135

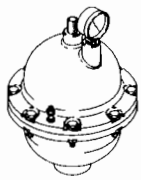

239095
Automatic

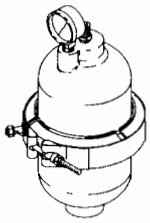

239096
Automatic

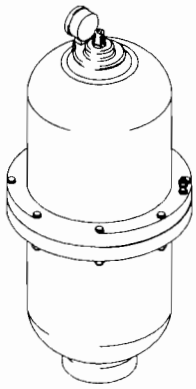

239126
Automatic

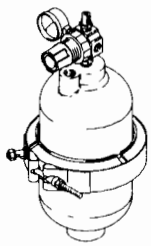

239091
Adjustable

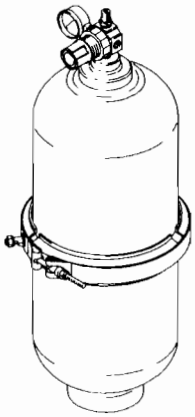

239088
Adjustable

Technical Specifications

Surge Suppressors	Husky 750	Husky 2000
Max. air input pressure	120 psi (0.84 MPa, 8.4 bar)	120 psi (0.84 MPa, 8.4 bar)
Air line connection	1/4 npt	1/4 npt
Fluid inlet size	3/4 in npt(f)	2 in npt(f)
Instruction manual	308703	308703

Husky 205 Accessories	Part Number
AIR CONTROLS	
Regulator / Filter Assembly 1/4" npt(f) (6.35 mm)	246946
Quick Connect Air Coupler 1/4" npt (6.35 mm)	208536
Quick Connect Air Nipple 1/4" npt (6.35 mm) mbe	169970
Air Shut Off Valve 1/4" npt (6.35mm), bleed type, relieves trapped air downline of valve	110223
Air Runaway Valve (stops pump from cavitating when empty)	224040
Air Muffler (comes with pump)	114174
55-GALLON SIPHON KITS	
Polypropylene Suction Kit (includes siphon hose, tube and connectors)	239142
Acetal Suction Kit (includes siphon hose, tube and connectors)	239143
PVDF Suction Kit (includes siphon hose, tube and connectors)	239144
REMOTE PUMP CONTROLLERS	
CycleFlo (cpm rate and batch control) 120v	195264
CycleFlo (cpm rate and batch control) 240v	196706
CycleFlo II (rate controller with solenoid valve) 120v	195265

Husky 307 Accessories	
AIR CONTROLS	
Regulator / Filter Assembly 1/4" npt(f) (6.35 mm)	246946
Quick Connect Air Coupler 1/4" npt (6.35 mm)	208536
Quick Connect Air Nipple 1/4" npt (6.35 mm) mbe	169970
Air Shut Off Valve 1/4" npt (6.35 mm), bleed type, relieves trapped air downline of valve	110223
Air Runaway Valve (stop pump from cavitating when empty)	224040
Air Muffler (comes with pump)	112933
55-GALLON SIPHON KITS	
Polypropylene Suction Kit (includes siphon hose, tube and connectors)	235502
Acetal Suction Kit (includes siphon hose, tube and connectors)	235500
REMOTE PUMP CONTROLLERS	
Husky 307 pumps are not equipped to run in remote mode	N/A

SPLIT MANIFOLD KITS

By varying the manifold kits, pumps can be configured in different ways (one inlet and two outlets, two inlets and one outlet, and two inlets and two outlets, etc), allowing for system flexibility. Pumps need to be ordered separately. One kit is required for each side (top or bottom). See 308439 for details.

Acetal Split Manifold Kit	237211
Polypropylene Split Manifold Kit	237210
Rubber Foot Kit	236452

Husky 515 and Husky 716 Accessories	Part Number
AIR CONTROLS	
Regulator / Filter Assembly 1/4" npt(f) (6.35 mm)	246946
Quick Connect Air Coupler 1/4" npt (6.35 mm)	208536
Quick Connect Air Nipple 1/4" npt (6.35 mm) mbe	169970
Air Shut Off Valve 1/4" npt (6.35 mm), bleed type, relieves trapped air downline of valve	110223
Air Runaway Valve (stop pump from cavitating when empty)	224040
Air Muffler (comes with pump)	112933
Center Section Conversion Kit (converts an old style Husky 715 to a Husky 515/716)	241631
Center Section Conversion Kit (converts an old remote style Husky 715 to a Husky 515/716)	241664
55-GALLON SIPHON KITS	
Drum Kit (includes "easy out seal" mounting base and siphon tube). Best used with a wall mounted Husky 515 or 716 model. Pump models can be mounted to base, but may require opening bottom inlet. See 309116 for details.	
Mounting Base with a Polypropylene Siphon Tube	233045
Mounting Base with a Aluminum Siphon Tube	233046
Mounting Base with a Stainless Steel Siphon Tube (used with non sst pumps)	233047
Mounting Base with a Stainless Steel Siphon Tube (for sst pump only)	233048
REMOTE PUMP CONTROLLERS	
CycleFlo (cpm rate and batch control) 120v	195264
CycleFlo (cpm rate and batch control) 240v	196706
CycleFlo II (rate controller with solenoid valve) 120v	195265
Cycle Counter Kit (counts cycles of pump through a magnetic sensor)	241406
Proximity Switch Kits (used in conjunction with 241406 kit)	241405
SPLIT MANIFOLD KITS (HUSKY 515 ONLY)	
By varying the manifold kits, pumps can be configured in different ways (one inlet and two outlets, two inlets and one outlet, and two inlets and two outlets, etc), allowing for system flexibility. Pumps need to be ordered separately. See manual 308951 for details.	
Polypropylene Inlet Manifolds	241240
Polypropylene Outlet Manifolds	241243
Acetal Inlet Manifolds	241241
Acetal Outlet Manifolds	241244
PVDF Inlet Manifolds	241242
PVDF Outlet Manifolds	241245
MISCELLANEOUS ACCESSORIES	
Duckbill Replacement Parts (urethane) for 515 and 716 Husky Pumps	239754
SURGE SUPPRESSORS	
Surge suppressors are designed to reduce the pulsation caused during pump changeover. The suppressor construction is generally closely matched with the pump's material (Stainless Steel with Stainless Steel, Acetal with Aluminum, etc.) and are available in either an adjustable or automatic version. See 308703 for details.	
Automatic Husky 750, 3/4" (19.05 mm)	
Polypropylene (wetted bottom and top housings) with a Buna N bladder	239096
with PTFE bellows	239121
with a Fluoroelastomer bladder	239122

Husky 515 and Husky 716 Accessories (continued)

	Part Number
SURGE SUPPRESSORS (CONTINUED)	
Stainless Steel (wetted bottom and top housings) with a Buna N bladder	239095
with PTFE bellows	239123
with a Fluoroelastomer bladder	239124
Acetal (wetted bottom and top housings) with a Buna N bladder	239094
with PTFE bellows	239125
Adjustable Husky 750, 3/4" (19.05 mm)	
Polypropylene (wetted bottom and top housings) with a Buna N bladder	239091
with PTFE bellows	239129
with a Fluoroelastomer bladder	239130
Stainless Steel (wetted bottom and top housings) with a Buna N bladder	239090
with PTFE bellows	239131
with a Fluoroelastomer bladder	239132
Acetal (wetted bottom and top housings) with a Buna N bladder	239089
with PTFE bellows	239133

LEAK DETECTOR

Leak detectors are designed to shut off the pump in the event a diaphragm fails. The leaking material flows out the air section and is captured by the leak detector reservoir. Once the reservoir is filled, a signal is sent that would shut off the pump. These detectors should only be used when a massive failure is allowed.

Polypropylene Housings with PVC Wetted Parts	239080
Shut Off Valve Kit (used in conjunction with 239080)	113870

Husky 1050, 1590, 2150 Accessories

AIR CONTROLS	
Regulator / Filter Assembly 1/2" npt(f) (12.7 mm)	246947
Quick Connect Air Coupler 1/2" npt (12.7 mm)	110199
Quick Connect Air Nipple 1/2" npt (12.7 mm) mbe	110196
Air Shut Off Valve 1/2" npt (12.7mm), bleed type, relieves trapped air downline of valve	110225
Air Runaway Valve (stop pump from cavitating when empty)	224040
Air Muffler (comes with pump) 1050 pumps	112182
Air Muffler (comes with pump) 1590 and 2150 pumps	102656
Center Section Conversion Kit (converts an aluminum center section to sst. Includes air covers).	
Husky 1590	246451
Husky 2150	246452
55-GALLON SIPHON KIT	
Siphon kit is used for drawing fluids from 55-gallon sized containers, through a 2" bung opening. Kit comes with carbon steel tube, 8' (2.44m) polyethylene hose and couplings	222916
REMOTE PUMP CONTROLLERS	
CycleFlo (cpm rate and batch control) 120v	195264
CycleFlo (cpm rate and batch control) 240v	196706
CycleFlo II (rate controller with solenoid valve) 120v	195265
DUAL INLET MANIFOLD	
Aluminum Husky 1050 only	24D205

Husky 1050, 1590, 2150 Accessories (continued)

	Part Number
SURGE SUPPRESSORS	
Surge suppressors are designed to reduce the pulsation caused during pump changeover. The suppressor construction is generally closely matched with the pump's material (Stainless Steel with Stainless Steel, Acetal with Aluminum, etc.) and are available in either an adjustable or automatic version. See 308703 for details.	
Automatic Husky 2000, 2 in (50.8 mm)	
Polypropylene (wetted bottom and top housings) with a Buna N bladder	239092
with PTFE bellows	239128
Stainless Steel (wetted bottom and top housings) with a Buna N bladder	239093
with PTFE bellows	239126
with a Fluoroelastomer bladder	239127
Adjustable Husky 2000, 2 in (50.8 mm)	
Polypropylene (wetted bottom and top housings) with a Buna N bladder	239087
with PTFE bellows	239136
Stainless Steel (wetted bottom and top housings) with a Buna N bladder	239088
with PTFE bellows	239134
with a Fluoroelastomer bladder	239135
UL PUMPS	
For use with leaded and unleaded fuels	
Husky 1050 for use with leaded fuel (seat, ball, diaphragm)	647016
Same as 236265, maximum inlet of 50 psi (3.4 bar, 0.3 MPa)	647648
PTFE/EPDM OVERMOLDED DIAPHRAGMS	
Industrial upgrade kits – includes new airside diaphragm plate	
Upgrade kit for 1 inch pump	289224
Upgrade kit for 1.5 inch pump	289225
Upgrade kit for 2 inch pump	289226
LEAK DETECTOR	
Leak detectors are designed to shut off the pump in the event a diaphragm fails. The leaking material flows out the air section and is captured by the leak detector reservoir. Once the reservoir is filled, a signal is sent that would shut off the pump. These detectors should only be used when a massive failure is allowed.	
Polypropylene Housings with PVC Wetted Parts	239080
Shut Off Valve Kit (used in conjunction with 239080)	113870
MISCELLANEOUS ACCESSORIES	
Flange Kits. Used to transition a flanged pump to a npt connection to transition from a threaded connection to a flange. It is recommended that the flange kit be compatible with the pump material.	
Polypropylene 1 inch (24.14 mm) flange for Husky 1050 D72XXX pumps. 1" ANSI x 1" npt (f)	239005
Stainless Steel 1 inch (24.14 mm) flange for Husky 1050 D71XXX and D74XXX pumps 1" ANSI x 1" npt (f)	239008
PVDF 1 inch (24.14 mm) flange for Husky 1050 D75XXX pump 1" ANSI x 1" npt (f)	239009
Polypropylene 1-1/2 inch (36.84 mm) flange for Husky 1590 DB2XXX pump 1-1/2" ANSI x 1-1/2" (f)	239006
PVDF 1-1/2 inch (36.84 mm) flange for Husky 1590 DB5XXX pump. 1-1/2" ANSI x 1-1/2" (f)	239010
Polypropylene 2 inch (48.28 mm) flange for Husky 2150 DF2XXX pump. 2" ANSI x 2" (f)	239007
PVDF 2 inch (48.28 mm) flange for Husky 2150 DF5XXX pump 2" ANSI x 2" (f)	239011

Husky 3275 Accessories

AIR CONTROLS

Regulator / Filter Assembly 3/4" npt(f) (19.5 mm)	246948
Quick Connect Air Coupler 3/4" npt (19.5 mm)	110200
Quick Connect Air Nipple 3/4" npt (19.5 mm) mbe	110197
Air Shut Off Valve 3/4" npt (19.5 mm), bleed type, relieves trapped air downline of valve	110226
Air Runaway Valve (stop pump from cavitating when empty)	224040
Air Muffler (comes with pump)	111897

55-GALLON SIPHON KITS

Typically, 3" pumps are not used for emptying 55-gallon containers	N/A

REMOTE PUMP CONTROLLERS

Husky 307 pumps are not equipped to run in remote mode	N/A

SPLIT MANIFOLD KITS

There are no Husky 3275 with a split manifold option	N/A

SURGE SUPPRESSORS

Surge suppressors are designed to reduce the pulsation caused during pump changeover. The suppressor construction is generally closely matched with the pump's material (Stainless Steel with Stainless Steel, Acetal with Aluminum, etc.) and are available either in adjustable or automatic version. See 308703 for details.

Automatic Husky 2000, 2 in (50.8 mm)	
Polypropylene (wetted bottom and top housings) with a Buna N bladder	239092
with PTFE bellows	239128
Adjustable Husky 2000, 2 in (50.8 mm)	
Polypropylene (wetted bottom and top housings) with a Buna N bladder	239087
with PTFE bellows	239136

LEAK DETECTOR

Leak detectors are designed to shut off the pump in the event a diaphragm fails. The leaking material flows out the air section and is captured by the leak detector reservoir. Once the reservoir is filled, a signal is sent that would shut off the pump. These detectors should only be used when a massive failure is allowed.

Polypropylene Housings with PVC Wetted Parts	239080
Shut Off Valve Kit (used in conjunction with 239080)	113870

Ordering Information and Technical Specifications

Name of Pump	Senator 19:1	Viscount II 1900	Bulldog 31:1	Viscount II 3100
Lower size	800	800	800	800
Maximum fluid pressure	1900 psi (131 bar, 13.1 MPa)	1900 psi (131 bar, 13.1 MPa)	3100 psi (213 bar, 21.3 MPa)	3100 psi (213 bar, 21.3 MPa)
Maximum motor inlet pressure	100 psi (air) (6.9 bar, 0.69 MPa)	450 psi (oil) (31 bar, 3.1 MPa)	100 psi (air) (6.9 bar, 0.69 Mpa)	750 psi (oil) (51.7 bar, 5.1 MPa)
Flow rate @ 60 cpm	2.8 gpm (10.6 lpm)	2.8 gpm (10.6 lpm)	2.8 gpm (10.6 lpm)	2.8 gpm (10.6 lpm)
Cfm or gpm required per gallon	24 cfm	4.3 gpm (16.2 lpm)	32 cfm	4.3 gpm (16.2 lpm)
Fluid pump outlet size	1" npt (f)	1" npt (f)	1" npt (f)	1" npt (f)
Motor inlet size	3/4" npt (f)	3/4" npt (f)	3/4" npt (f)	3/4" npt (f)
Weight of pump	160 lb (73 kg)	177 lb (80 kg)	160 lb (73 kg)	177 lb (80 kg)
Instruction manual	308351	308351	308351	308351

Bin Supply	Senator 19:1	Viscount II 1900	Bulldog 31:1	Viscount II 3100
Pump	246941	246938	246940	246938
Air controls: FRL, 1/2"	217072		217072	
Air run away control, 3/4"	224040		224040	
Air speed control, 1/2"(f)	510441		510441	
Floor stand (3" inlet)	222780	222780	222780	222780
Hydraulic controls*		236865		236865
Outlet hydraulic hose connector 1"(m) x 1-1/2"(f), 1500 psi rated		Not included		Not included

55-Gallon Drum Supply	Senator 19:1	Viscount II 1900	Bulldog 31:1	Viscount II 3100
Ram package with pump	234377	234378	234374	234378
Air run away control, 3/4"	224040		224040	
Air speed control, 1/2"	510441		510441	
Hydraulic controls*		236865		236865
Outlet hydraulic hose connector 1"(m) x 1-1/2"(f), 1500 psi rated		Not included		Not included

Misc. Information	Senator 19:1	Viscount II 1900	Bulldog 31:1	Viscount II 3100
Pump lower section	246939	246939	246939	246939
Ram plate replacement seals	165601	165601	165601	165601

**Hydraulic controls include hydraulic flow and pressure control, ball valves, 3 ft supply and return hose*

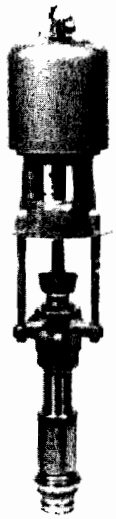

19:1 Senator

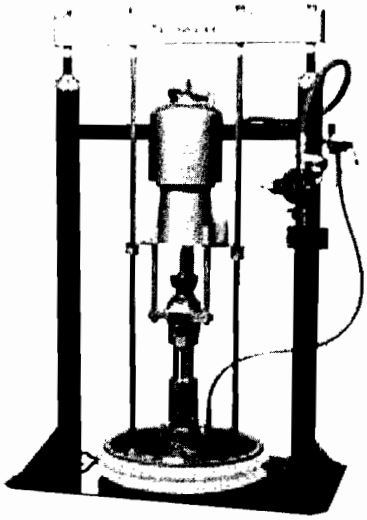

19:1 Senator on 55 gallon ram

31:1 Bulldog

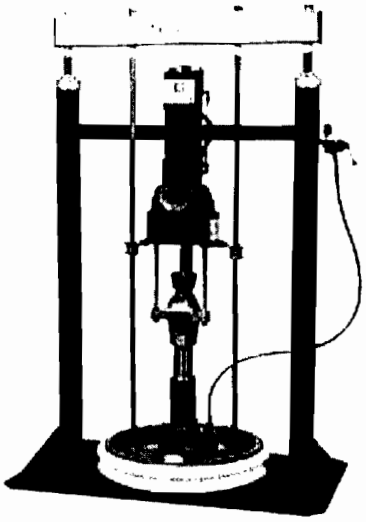

Viscount II 3100 on 55 gallon ram

Name of Pump	Bulldog 12:1	Viscount II 1200	King 24:1	Viscount II 2400
Lower size	2100	2100	2100	2100
Maximum fluid pressure	1200 psi (82.8 bar, 8.28 MPa)	1200 psi (82.8 bar, 8.28 MPa)	2400 psi (165 bar, 16.5 MPa)	2400 psi (165 bar, 16.5 MPa)
Maximum motor inlet pressure	100 psi (air) (6.9 bar, 0.69 MPa)	750 psi (oil) (51.7 bar, 5.1 Mpa)	100 psi (air) (6.9 bar, 0.69 Mpa)	1500 psi (oil) (103 bar, 10.3 Mpa)
Flow rate @ 60 cpm	7.5 gpm (28.4 lpm)	7.5 gpm (28.4 lpm)	7.5 gpm (28.4 lpm)	7.5 gpm (28.4 lpm)
Cfm or gpm required per gallon	20 cfm	1.6 gpm (6 lpm)	25 cfm	1.6 gpm (6 lpm)
Fluid pump outlet size	1-1/2" npt (m)	1-1/2" npt (m)	1-1/2" npt (m)	1-1/2" npt (m)
Motor inlet size	3/4" npt (f)	3/4" npt (f)	3/4" npt (f)	3/4" npt (f)
Weight of pump	142 lb (65 kg)	196 lb (89 kg)	160 lb (73 kg)	196 lb (89 kg)
Instruction manual	308149	308149	308149	308149

Bin Supply	Bulldog 12:1	Viscount II 1200	King 24:1	Viscount II 2400
Pump	246935	246937	246936	246937
Air controls: FRL, 1/2"	217072		217072	
Air run away control, 3/4"	224040		224040	
Air speed control, 1/2"(f)	510441		510441	
Floor stand (3" inlet)	222780	222780	222780	222780
Hydraulic controls*		236865		236865
Outlet hydraulic hose connector 1"(m) x 1-1/2" (f), 1500 psi rated		Not included		Not included

55-Gallon Drum Supply	Bulldog 12:1	Viscount II 1200	King 24:1	Viscount II 2400
Ram package with pump	234371	234376	234372	234376
Air run away control, 3/4"	224040		224040	
Air speed control, 1/2"(f)	510441		510441	
Hydraulic controls*		236865		236865
Outlet hydraulic hose connector 1"(m) x 1-1/2" (f), 1500 psi rated		Not included		Not included

Misc. Information	Bulldog 12:1	Viscount II 1200	King 24:1	Viscount II 2400
Pump lower section	246934	246934	246934	246934
Ram plate replacement seals	165601	165601	165601	165601

**Hydraulic controls include hydraulic flow and pressure control, ball valves, 3 ft supply and return hose*

12:1 Bulldog

Viscount II 2100

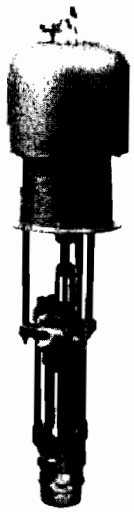

24:1 King

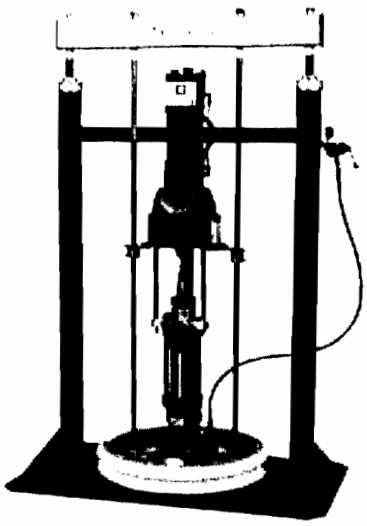

Viscount II 2400 on 55 gallon ram

Piston Pumps for Ink Applications

Ordering Information and Technical Specifications

Piston Pumps	President 20:1
Lower size	450
Maximum fluid pressure	2000 psi (140 bar. 14 MPa)
Maximum motor inlet pressure	100 psi (7 bar, 0.7 MPa)
Flow rate @ 60 cpm	1.2 gpm (4.5 lpm)
Cfm or gpm required per gallon	35 cfm
Fluid pump outlet size	3/4" npt (f)
Motor inlet size	1/2" npt (f)
Weight of pump	50 lb (22.7 kg)
Instruction manual	308017

Bin Supply	President 20:1
Pump	246933
Air controls: FRL, 3/8"(f)	110150
Floor stand (3" inlet)	222780
Air run away control, 3/4"(f)	224040
Air speed control 1/2"(f)	510441

55-Gallon Drum Supply	President 20:1
Ram package with pump and air regulator	234369
Air run away control, 3/4"(f)	224040
Air speed control, 1/2"(f)	510441

5-Gallon Pail Supply	President 20:1
Cart package with pump	234370
Air run away control, 3/4"(f)	224040
Air speed control, 1/2"(f)	510441

Misc. Information	President 20:1
Pump lower section	246932
Ram plate replacement seals	165601

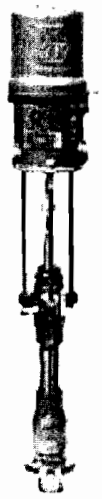

20:1 President

20:1 President
for 5 gallon pail supply
(mounted inductor setup)

Ordering Information and Technical Specifications

Piston Pumps with Sealed Wet Cup

Ink Pump Package Part No.	Series	Ratio	DataTrak	Remote DataTrak	Power Source	Displacement Pump Size	Maximum Air or Hydraulic Input Pressure psi (MPa, bar)	Maximum Fluid Working Pressure psi (MPa, bar)
258744	A	14:1			Air	500 cc	100 (0.7, 7.0)	1400 (9.7, 97)
258745	A	14:1	x		Air	500 cc	100 (0.7, 7.0)	1400 (9.7, 97)
258746	A	14:1		x	Air	500 cc	100 (0.7, 7.0)	1400 (9.7, 97)
258747	A	23:1			Air	200 cc	100 (0.7, 7.0)	2300 (15.9, 159)
258748	A	23:1	x		Air	200 cc	100 (0.7, 7.0)	2300 (15.9, 159)
258749	A	23:1		x	Air	200 cc	100 (0.7, 7.0)	2300 (15.9, 159)
258750	A	26:1			Air	500 cc	100 (0.7, 7.0)	2600 (17.9, 179)
258751	A	26:1	x		Air	500 cc	100 (0.7, 7.0)	2600 (17.9, 179)
258752	A	26:1		x	Air	500 cc	100 (0.7, 7.0)	2600 (17.9, 179)
258753	A	1.6:1			Hydraulic Oil	500 cc	1500 (10, 103)	2300 (15.9, 159)

Motor Conversion Kits

Part No.	Description
24C743	To install an L200CM Check-Mate displacement pump on an existing King air motor
24C744	To install an L500CM Check-Mate displacement pump on an existing King air motor
24D625	To install an L500CM Check-Mate displacement pump on an existing Viscount II hydraulic motor

Piston Pumps with Sealed Wet Cup	
Stroke length	
Pneumatic	4.75 in (120.65 mm)
Hydraulic	4.69 in (119.13 mm)
Maximum fluid operating temperature	180° F (82.3° C)
Air or Hydraulic Inlet Size	3/4 npt (f)
Fluid outlet size	200 cc displacement pump: 1 npt (f)
	500 cc displacement pump: 1-1/2 npt (f)
Maximum pump speed	60 cpm

(Do not exceed maximum recommended speed of fluid pump, to prevent premature pump wear)

Other

Part No.	Description
222780	Floor Stand Kit See manual 307971

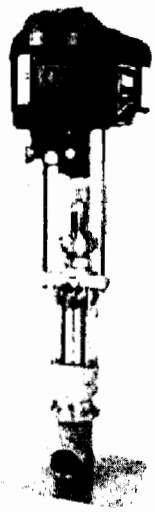

Pneumatic

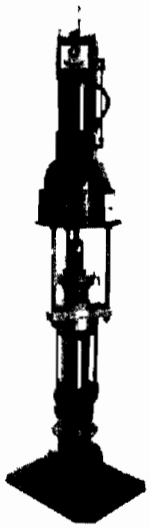

Hydraulic

Notes

Notes

Notes

Graco Standard Warranty

Graco warrants all equipment referenced in this document which is manufactured by Graco and bearing its name to be free from defects in material and workmanship on the date of sale by an authorized Graco distributor to the original purchaser for use. With the exception of any special, extended, or limited warranty published by Graco, Graco will, for a period of twelve months from the date of sale, repair or replace any part of the equipment determined by Graco to be defective. This warranty applies only when the equipment is installed, operated and maintained in accordance with Graco's written recommendations.

This warranty does not cover, and Graco shall not be liable for general wear and tear, or any malfunction, damage or wear caused by faulty installation, misapplication, abrasion, corrosion, inadequate or improper maintenance, negligence, accident, tampering, or substitution of non-Graco component parts. Nor shall Graco be liable for malfunction, damage or wear caused by the incompatibility of Graco equipment with structures, accessories, equipment or materials not supplied by Graco, or the improper design, manufacture, installation, operation or maintenance or structures, accessories, equipment or materials not supplied by Graco.

This warranty is conditioned upon the prepaid return of the equipment claimed to be defective to an authorized Graco distributor for verification of the claimed defect. If the claimed defect is verified, Graco will repair or replace free of charge any defective parts. The equipment will be returned to the original purchaser transportation prepaid. If inspection of the equipment does not disclose any defect in material or workmanship, repairs will be made at a reasonable charge, which charges may include the costs of parts, labor, and transportation.

THIS WARRANTY IS EXCLUSIVE, AND IS IN LIEU OF ANY OTHER WARRANTIES, EXPRESS OR IMPLIED, INCLUDING BUT NOT LIMITED TO WARRANTY OF MERCHANTABILITY OR WARRANTY OF FITNESS FOR A PARTICULAR PURPOSE.

Graco's sole obligation and buyer's sole remedy for any breach of warranty shall be as set forth above. The buyer agrees that no other remedy (including, but not limited to, incidental or consequential damages for lost profits, lost sales, injury to person or property, or any other incidental or consequential loss) shall be available. Any action for breach of warranty must be brought within two (2) years of the date of sale.

GRACO MAKES NO WARRANTY, AND DISCLAIMS ALL IMPLIED WARRANTIES OF MERCHANTABILITY AND FITNESS FOR A PARTICULAR PURPOSE IN CONNECTION WITH ACCESSORIES, EQUIPMENT, MATERIALS OR COMPONENTS SOLD BUT NOT MANUFACTURED BY GRACO. These items sold, but not manufactured by Graco (such as electric motors, switches, hose, etc.), are subject to the warranty, if any, of their manufacturer. Graco will provide purchaser with reasonable assistance in making any claim for breach of these warranties.

In no event will Graco be liable for indirect, incidental, special or consequential damages resulting from Graco supplying equipment hereunder, or the furnishing, performance, or use of any products or other goods sold hereto, whether due to a breach of contract, breach of warranty, the negligence of Graco, or otherwise.

FOR GRACO CANADA CUSTOMERS

The Parties acknowledge that they have required that the present document, as well as all documents, notices and legal proceedings entered into, given or instituted pursuant hereto or relating directly or indirectly hereto, be drawn up in English. Les parties reconnaissent avoir convenu que la rédaction du présente document sera en Anglais, ainsi que tous documents, avis et procédures judiciaires exécutés, donnés ou intentés à la suite de ou en rapport, directement ou indirectement, avec les procedures concernées.

Equipment Misuse Hazard

General Misuse: Any misuse of Graco equipment or accessories, such as over-pressurizing, modifying parts, using incompatible chemicals and fluids, or using worn or damaged parts, can cause them to rupture. Misuse of equipment can result in fluid injection, splashing in the eyes or on the skin, or other serious bodily injury, or fire, explosion or property damage. NEVER alter or modify any part of Graco equipment; doing so could cause the product to malfunction. CHECK all equipment regularly and repair or replace worn or damaged parts immediately. Always wear protective eye wear, gloves, clothing and respirator as recommended by fluid and solvent manufacturers.

System Pressure: Be sure that all equipment and accessories used are rated to withstand the applicable MAXIMUM WORKING PRESSURE. DO NOT exceed the maximum working pressure of any component or accessory used in a system.

Fluid and Solvent Compatibility: All chemicals used in a Graco sprayer must be compatible with wetted parts. Consult your chemical supplier to ensure compatibility. Do not use 1:1:1-trichloroethane, methylene chloride, other halogenated hydrocarbon solvents or fluids containing such solvents in this equipment, which contains aluminum and/or zinc parts. Such use could result in a serious chemical reaction, with the possibility of explosion, which could cause death, serious bodily injury and/or substantial property damage.

ABOUT GRACO

PROVEN QUALITY. LEADING TECHNOLOGY.

Founded in 1926, Graco is a world leader in fluid handling systems and components. Graco products move, measure, control, dispense and apply a wide range of fluids and viscous materials used in vehicle lubrication, commercial and industrial settings.

The company's success is based on its unwavering commitment to technical excellence, world-class manufacturing and unparalleled customer service. Working closely with qualified distributors, Graco offers systems, products and technology that set the quality standard in a wide range of fluid handling solutions. Graco provides equipment for spray finishing, protective coating, paint circulation, lubrication, and dispensing sealants and adhesives, along with power application equipment for the contractor industry. Graco's ongoing investment in fluid management and control will continue to provide innovative solutions to a diverse global market.

GRACO LOCATIONS

MAILING ADDRESS
P.O. Box 1441
Minneapolis, MN 55440-1441
Tel: 612-623-6000
Fax: 612-623-6777

AMERICAS

MINNESOTA
Worldwide Headquarters
Graco Inc.
88-11th Avenue N.E.
Minneapolis, MN 55413

EUROPE

BELGIUM
European Headquarters
Graco N.V.
Industrieterrein-Oude Bunders
Slakweidestraat 31
3630 Maasmechelen,
Belgium
Tel: 32 89 770 700
Fax: 32 89 770 777

ASIA PACIFIC

AUSTRALIA
Graco Australia Pty Ltd.
Suite 17, 2 Enterprise Drive
Bundoora, Victoria 3083
Australia
Tel: 61 3 9467 8558
Fax: 61 3 9467 8559

CHINA
Graco Hong Kong Ltd.
Shanghai Representative Office
Room 118 1st Floor
No.2 Xin Yuan Building
No.509 Cao Bao Road
Shanghai, 200233
The People's Republic of China
Tel: 86 21 649 50088
Fax: 86 21 649 50077

INDIA
Graco Hong Kong Ltd.
India Liaison Office
Room 432, Augusta Point
Regus Business Centre 53
Golf Course Road
Gurgaon, Haryana
India 122001
Tel: 91 124 435 4208
Fax: 91 124 435 4001

JAPAN
Graco K.K.
1-27-12 Hayabuchi
Tsuzuki-ku
Yokohama City, Japan 2240025
Tel: 81 45 593 7300
Fax: 81 45 593 7301

KOREA
Graco Korea Inc.
Shinhan Bank Building
4th Floor #1599
Gwanyang-Dong, Dongan-Ku,
Anyang-si, Korea 431-060
Tel: 82 31 476 9400
Fax: 82 31 476 9801

SALES/ DISTRIBUTION/ SERVICE

Call today for product information or to request a demonstration.

877-84GRACO (1-877-844-7226) or visit us at www.graco.com.

Graco Inc. is registered to I.S. EN ISO 9001

North America
Customer Service
800-328-0211
Fax 877-340-6427

©2001-2009 Graco Inc. 300435 Rev. J 12/09 All written and visual data contained in this document are based on the latest product information available at the time of publication. Graco reserves the right to make changes at any time without notice. All other brand names or marks are used for identification purposes and are trademarks of their respective owners.

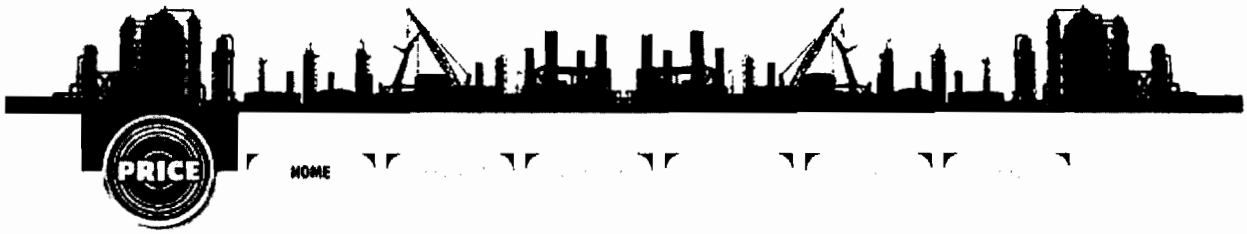

PRODUCT BROCHURE

WHY
a PRICE pump works

HOW
a PRICE pump works

WHERE
a PRICE pump works

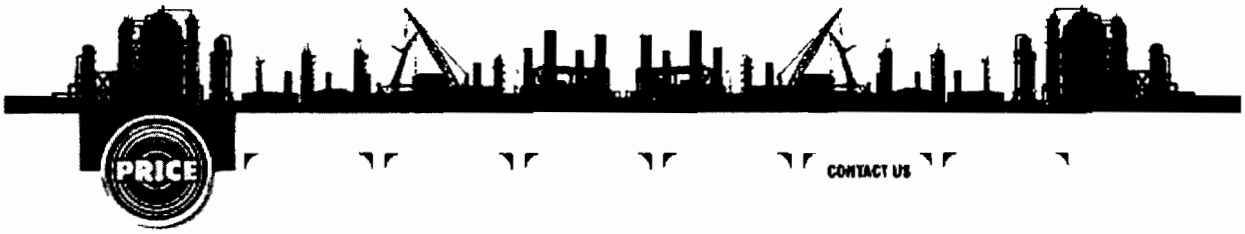

CONTACT US

PRODUCT BROCHURE

WHY
a PRICE pump works

HOW
a PRICE pump works

WHERE
a PRICE pump works

Sales Department

Customer Support

Technical Assistance

General Information

Enquiry Form

Name

Contact No

Email

City

State

Enquiry Details

Submit Reset

Mailing Address
PRICE PUMPS PVT. LTD.

Phone Numbers
Tel
Fax

Email

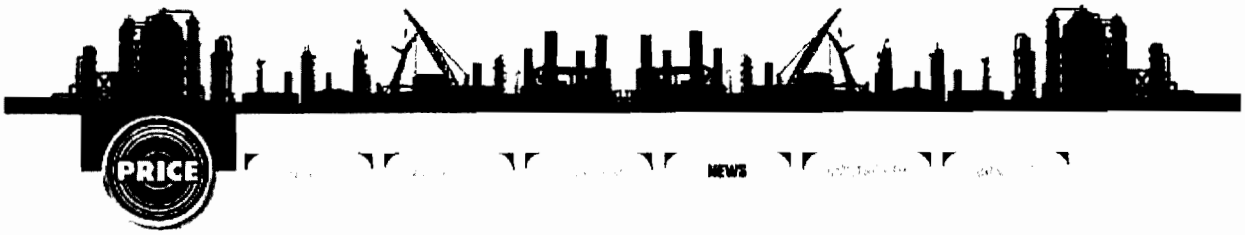

Price Pumps Pvt. Ltd. manufactures Air Operated Double Diaphragm Pumps in various sizes, Centrifugal pumps, pumping chambers, Basket strainers, butterfly valves, damper valves and Accessories in Polypropylene under the brand Dialflow.

Dialflow catalog Dialflow E Flyer

Price Pumps Pvt. Ltd. is now at E-mail Enquiries

EUROPEAN INSPECTION AND CERTIFICATION COMPANY S.A.
TATOIOU 73 & CHAR. TRIKOUPI, KIFISIA 14564, TEL.: 210-6252495, FAX: 210-6203018
email: [illegible], site: www.eurocert.gr

CERTIFICATION No: IN.CE.0034-08/07

CERTIFICATE OF CONFORMITY

EUROCERT is a Notified Body for Machinery Directive with Identification No. CE 1128

Following your relevant application and the attached Technical File which will be kept at the files of EUROCERT SA with regard to the certification of the following type of machines:

Manufacturer	:	**PRICE PUMPS PVT. LTD.**
Address	:	**8 HIND SERVICE INDUSTRIAL ESTATE, GR FLOOR, SANT GYANESHWAR ROAD, SHIVAJI PARK, MUMBAI 400028, INDIA**
Machine	:	**AIR OPERATED DOUBLE DIAPHRAGM PUMPS**
Models		**AOD 15, AOD 30, AOD 40, AOD 50 / 55, FLAP 55, AOD 80**
Harmonized Standards	:	**EN 809, EN 954-1, EN 12100-2**

According to the European Directive 98/37/EC article 8 paragraph 2, following the formation of the Technical File and the Declaration of Conformity, which clearly states that it meets the basic prerequisites regarding the safety and health of Appendix I of the above European Directive, your company is obligated to affix the above equipment with the CE marking as follows:

Date of Issue – 21/08/2007
Date of Expiry- 20/08/2012

CE

ATHENS, 21/08/2007
For EUROCERT S.A.

GEORGE N. SIFONIOS
DIRECTOR OF DEVELOPMENT

www.pricepumps.co.in

PRICE

AIR OPERATED DOUBLE DIAPHRAGM PUMPS

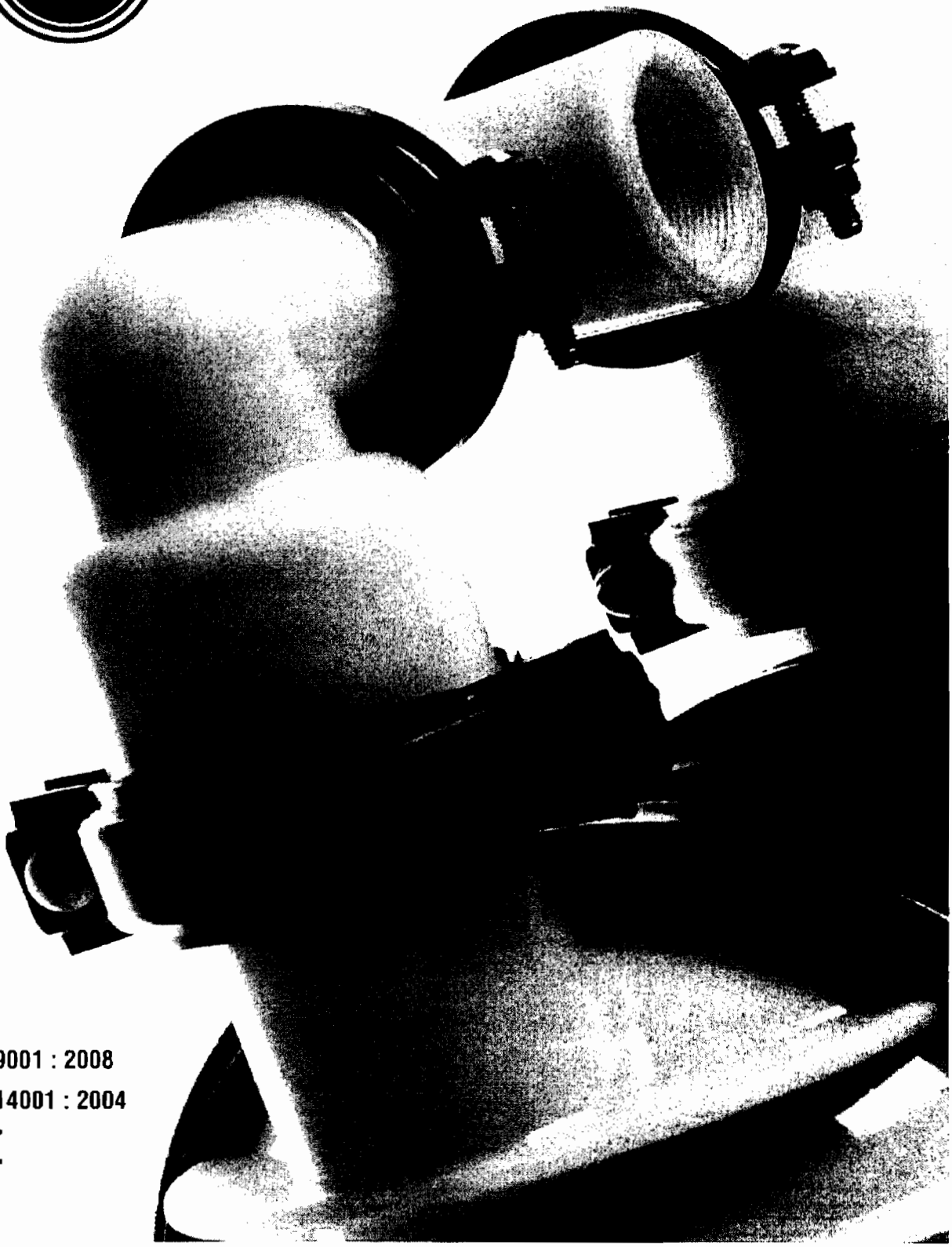

ISO 9001 : 2008

ISO 14001 : 2004

CE

THE **PRICE** PUMP
WHY BUY **PRICE** PUMP

PRICE PUMPS PVT LTD

For over two decades, PRICE Pumps Pvt. Ltd, India's largest manufacturer of air-operated double diaphragm pumps, has been providing the industry experts with the most reliable pumps on the market. PRICE pumps are self-priming, can handle viscous and abrasive products and can run dry without damage. Additionally, they do not employ costly motors, variable speed drives, by-pass plumbing or mechanical seals.

WHY BUY PRICE PUMPS

1. No electrical motor - non sparking.
2. No mechanical seals or gland packing.
3. The pumps can run dry indefinitely without damage.
4. Safe for use in hazardous/explosive environments.
5. Variable flow - simply regulate the inlet air supply to adjust the pump flow from zero to max.
6. If discharge is clogged or closed pump stops immediately; no power consumed, no wear.
   By opening discharge, flow starts automatically.
7. Self-priming from a dry start up to 6 meters without a foot valve.
8. Pressure up to 100 PSI (7 bar).
9. Operates submerged or with flooded suction.
10. No close fitting, sliding or rotating parts so can handle a wide range of fluids with high solid content.
11. Gentle non-shearing action.
12. Quick assembly and disassembly with split clamp bands.
13. Pumps are light weight and portable.

INSTALLATION VERSATILITY

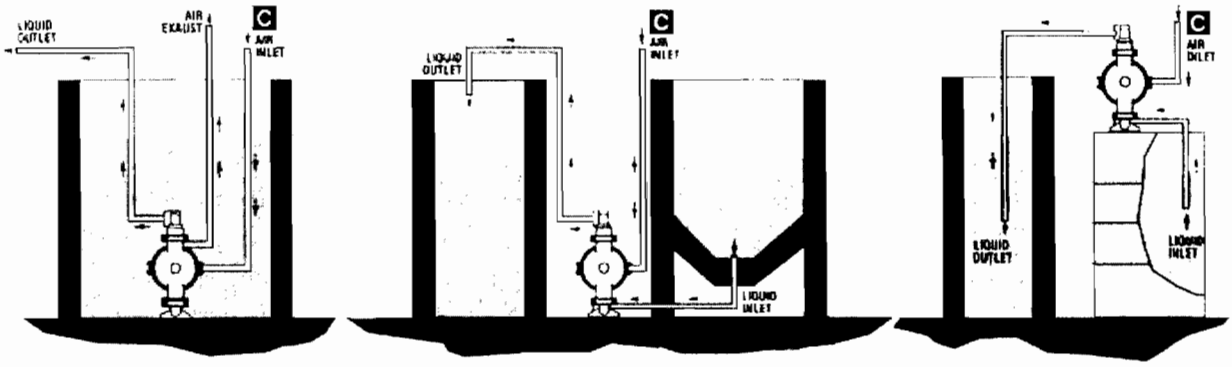

SUBMERGED POSITIVE SUCTION SELF PRIMING / DRUM TRANSFER

THE **PRICE** PUMP
HOW A **PRICE** PUMP WORKS

HOW THE PUMP WORKS

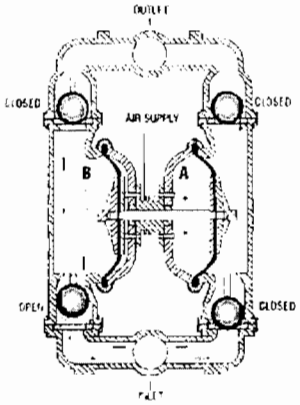

(LEFT STROKE)

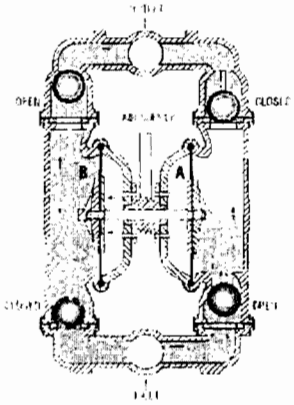

(MID STROKE)

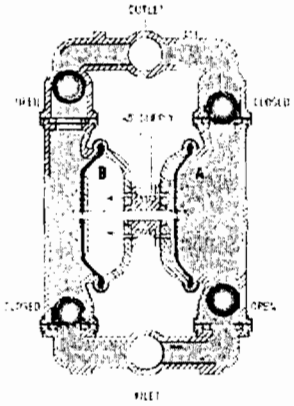

(RIGHT STROKE)

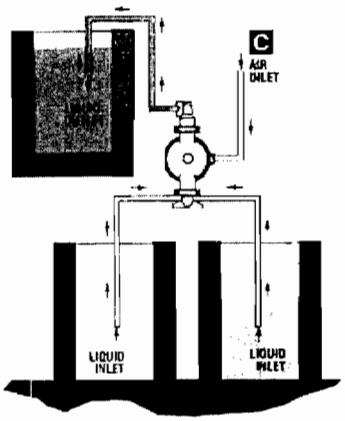

MIXING - TWIN SUCTION MANIFOLD

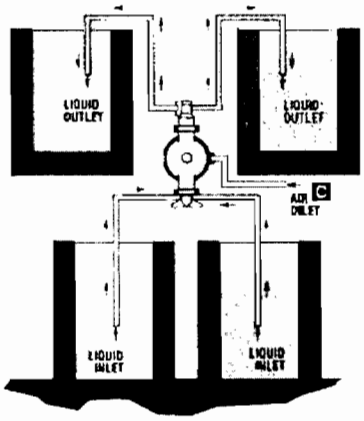

TWIN SUCTION & DELIVERY MANIFOLD

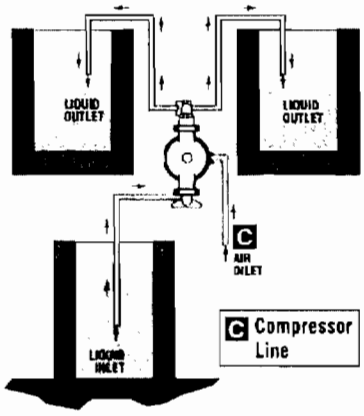

TWIN DELIVERY MANIFOLD

POLYPROPYLENE / PVDF

AVAILABLE MATERIALS OF CONSTRUCTION - PUMPS

Suction/discharge size	½" (15mm)		1" (25mm)	1½" (40mm)		2" (50mm)		3" (75mm)
[illegible]								
Polypropylene (PP)	✓	✓	✓	✓	✓	✓	✓	✓
Polyvinylidene Fluoride (PVDF)	✓	✓	✓	✓	✓	✓	✓	✓

Please consult us for your requirements for Hastelloy C, Alloy 20 etc.

SPECIFICATIONS AND PERFORMANCE
½" BSP (15mm) POLYPROPYLENE / PVDF

MOCs Also Available: SS 316, AL

PRICE

23Lpm (6Lpm)
Inlet: 12.70mm (½") BSP
Discharge: 12.70mm (½") BSP
Air Inlet: 6.35mm (¼") BSP
Air Exhaust: 12.70mm (½") BSP
Dry: 3.4m (11.75')
Wet: 2.83m (9.28')
Dry: 0.52m (1.64')
Wet: 0.90m (2.95')
20mm (0.078")

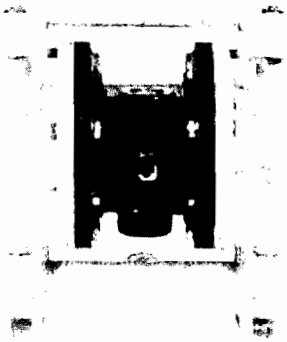

AOD 150 PP

AOD 15 PP

ALSO AVAILABLE IN PVDF

AOD 150 PVDF

AOD 15 PVDF

AOD 15/150

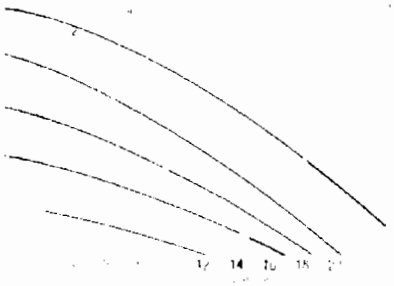

SPECIFICATIONS AND PERFORMANCE
1" BSP (25mm) POLYPROPYLENE / PVDF

PRICE

MOCs Also Available: SS 316, AL

135Lpm (34gpm)
Inlet: 25.40mm (1" BSP)
Discharge: 25.40mm (1" BSP)
Air Inlet: 9.53mm (3/8" BSP)
Air Exhaust: 12.70mm (1/2" BSP)
Dry: 3.05m (10')
Wet: 4.89m (16')
Dry: 2.14m (7')
Wet: 3.98m (13')
3.17mm (0.125")

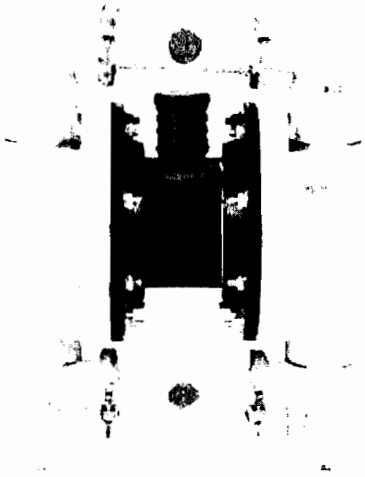

AOD 300 PP

ALSO AVAILABLE IN PVDF

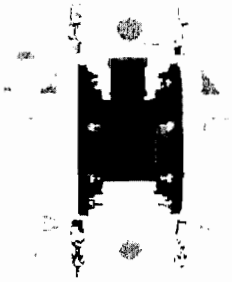

AOD 300 PVDF

AOD 300

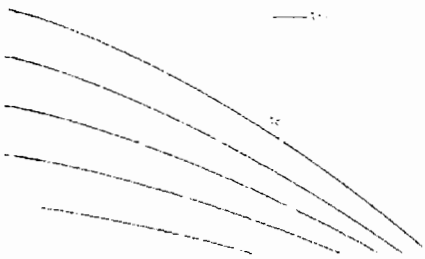

SPECIFICATIONS AND PERFORMANCE
1½" BSP (40mm) POLYPROPYLENE / PVDF

MOCs Also Available: SS316, AL, CI

PRICE

270 µm (225 g/l)
Inlet: 25-10mm (1") BSP
Discharge: 38-10mm (1½") BSP
Air Inlet: 9.04 bar (½" BSP)
Air Exhaust: 12.70mm (1") BSP
Dry: 4.57m (15')
Wet: 7.62m (25')
Dry: 3.05m (10')
Wet: 6.09m (20')
4.76mm (0.188")

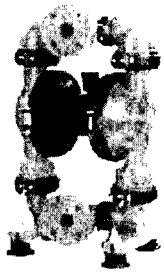

AOD 25 PP

AOD 400 PP

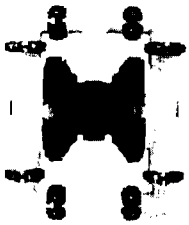

AOD 40 PP

ALSO AVAILABLE IN PVDF

AOD 400 PVDF

AOD 40 PVDF

AOD 25/40/400

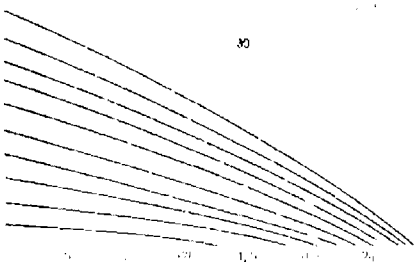

SPECIFICATIONS AND PERFORMANCE
2" BSP (50mm) POLYPROPYLENE / PVDF

PRICE

MOCs Also Available: SS 316, AL, CI

586Lpm (155gpm)
Inlet: 50.8[illegible] (2" BSP)
Discharge: [illegible]
Air Inlet: [illegible]
Air Exhaust: [illegible]
Dry: 4.57m (15ft)
Wet: [illegible] (25ft)
Dry: [illegible]
Wet: [illegible]
5.35mm (0.21")

AOD 500 PP

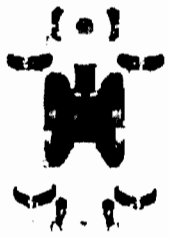

AOD 50 PP

ALSO AVAILABLE IN PVDF

AOD 500 PVDF

AOD 50 PVDF

AOD 50/500

SPECIFICATIONS AND PERFORMANCE
3" BSP (80mm) POLYPROPYLENE / PVDF

MOCs Also Available: SS 316, AL, CI

PRICE

800L/min (238gpm)
Inlet: 76.20mm (3"BSP)
Discharge: 76.20mm (3"BSP)
Air Inlet: 12.7mm (1/2" BSP)
Air Exhaust: 19.05mm (3/4" BSP)
Dry: 6.09m (20')
Wet: 7.62m (25')
Dry: 3.05m (10')
Wet: 6.09m (20')
19.10mm (0.750")

AOD 800 PP

ALSO AVAILABLE IN PVDF

AOD 800 PVDF

AOD 800

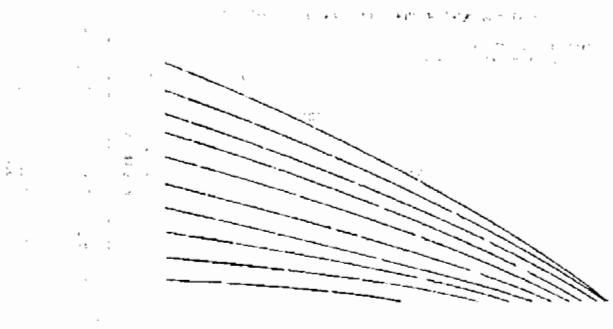

STAINLESS STEEL 316

AVAILABLE MATERIALS OF CONSTRUCTION - PUMPS									
Suction/discharge size		½" (15mm)	1" (25mm)	1½" (40mm)	2" (50mm)	3" (75mm)			
[illegible]									
Stainless Steel (SS)	✓	✓	✓	✓	✓	✓	✓	✓	✓
Please consult us for your requirements for Hastelloy C, Alloy 20 etc									

SPECIFICATIONS AND PERFORMANCE
½" BSP (15mm) STAINLESS STEEL 316

MOCs Also Available: RP, PVDF, AL, OI

23L pm (6gpm)
Inlet: 12.70mm (½" BSP)
Discharge: 12.70mm (½" BSP)
Air Inlet: 6.35mm (¼" BSP)
Air Exhaust: 12.70mm (½" BSP)
Dry: 1.45m (4.75')
Wet: 2.85m (9.25')
Dry: 0.50m (1.64')
Wet: 0.90m (2.95')
2mm (0.078")

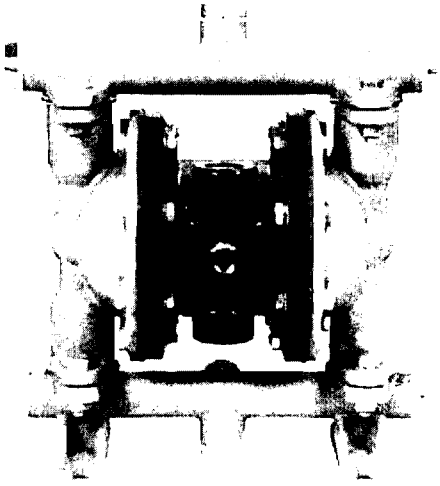

AOD 150 SS

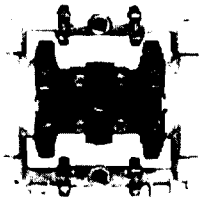

AOD 15 SS

AOD 15/150

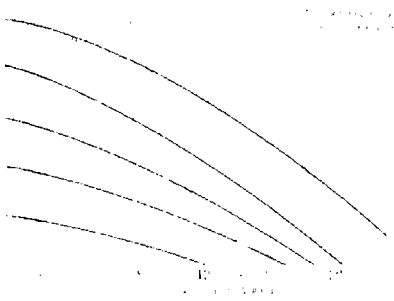

SPECIFICATIONS AND PERFORMANCE
1" BSP (25mm) STAINLESS STEEL 316

PRICE

MODEL Also Available PP PVDF ALCI

[illegible] (340gpm)
Inlet: 25.40mm (1" BSP)
Discharge: 25.40mm (1" BSP)
Air Inlet: 9.53mm (3/8" BSP)
Air Exhaust: [illegible]
Dry: 3.05m ([illegible])
Wet: 4.89m ([illegible])
Dry: [illegible]
Wet: 3.98m ([illegible])
3.17mm (0.125")

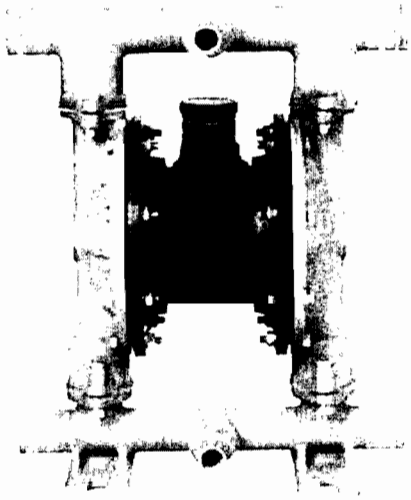

AOD 300 SS

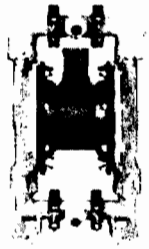

AOD 30 SS

[illegible]

AOD 300/30

[illegible]

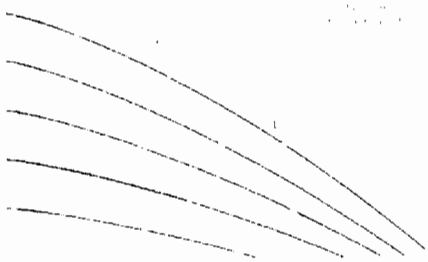

SPECIFICATIONS AND PERFORMANCE
1½" BSP (40mm) STAINLESS STEEL 316

MOCs Also Available: PP/PVDF/AL/CI

270Lpm (72gpm)
Inlet: 38/40mm (1½" BSP)
Discharge: 38/40mm (1½" BSP)
Air Inlet: 9/64mm (¼" BSP)
Air Exhaust: 1/2/70mm (1½" BSP)
Dry: 4.57m (15')
Wet: 7.62m (25')
Dry: 3.05m (10')
Wet: 6.09m (20')
1.76kgm (0.159 kg)

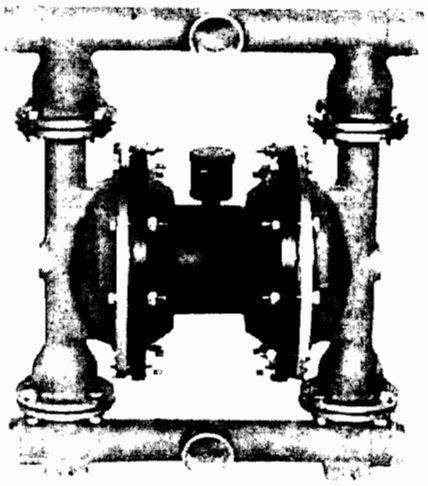

AOD 400 SS

AOD 40 SS

AOD 40/400

SPECIFICATIONS AND PERFORMANCE
2" BSP (50mm) STAINLESS STEEL 316

PRICE

Models Also Available: PP, PVDF, AL, CI

580Lpm (155gpm)
Inlet: 50.80mm (2" BSP)
Discharge: 50.80mm (2" BSP)
Air Inlet: 12.70mm (½" BSP)
Air Exhaust: 19.05mm (¾" BSP)
Dry: 1.57m (15')
Wet: 7.62m (25')
Dry: 3.05m (10')
Wet: 6.09m (20')
6.35mm (0.250")

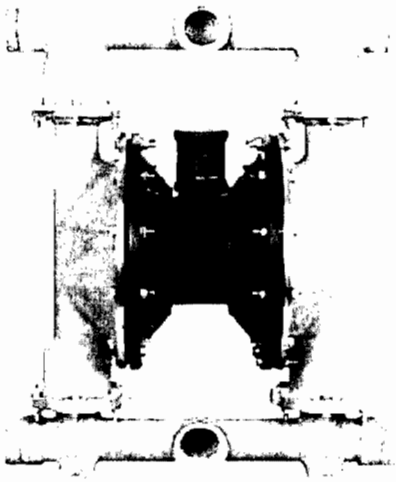

AOD 500 SS

AOD 55 SS

AOD 55/500

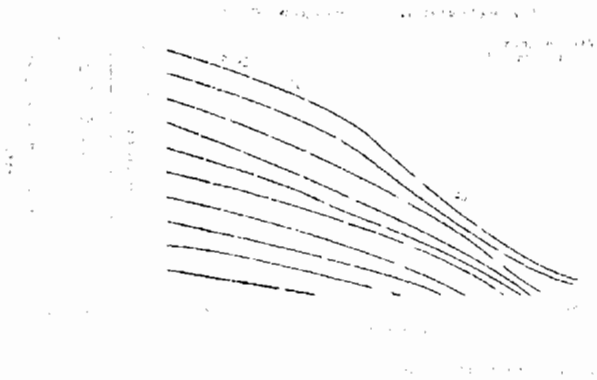

3" BSP (80mm) STAINLESS STEEL 316

MOCs Also Available: PP, PVDF, AL, CI

900L/min (238gpm)
Inlet: 76.20mm (3" BSP)
Discharge: 76.20mm (3" BSP)
Air Inlet: 12.70mm (½" BSP)
Air Exhaust: 19.05mm (¾" BSP)
Dry: 6.09m (20ft)
Wet: 7.62m (25ft)
Dry: 3.05m (10ft)
Wet: 6.09m (20ft)
19.10mm (0.750")

AOD 800 SS

AOD 800

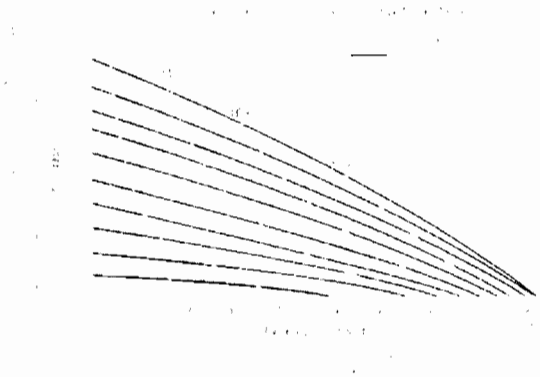

ALUMINIUM / CAST IRON

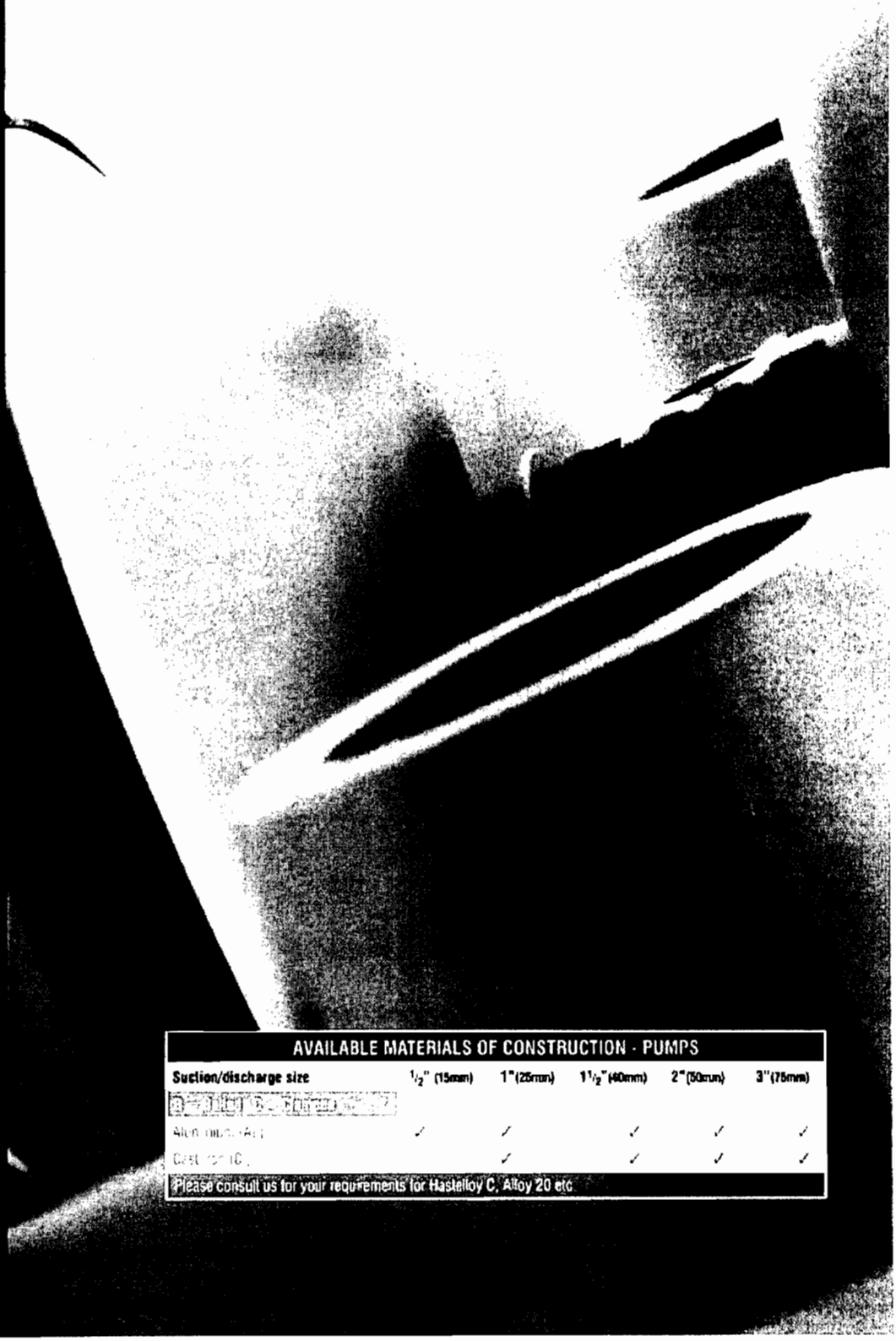

AVAILABLE MATERIALS OF CONSTRUCTION - PUMPS					
Suction/discharge size	½" (15mm)	1" (25mm)	1½" (40mm)	2" (50mm)	3" (75mm)
[illegible]					
Aluminium Alloy	✓	✓	✓	✓	✓
Cast Iron		✓	✓	✓	✓

*Please consult us for your requirements for Hastelloy C, Alloy 20 etc.

SPECIFICATIONS AND PERFORMANCE
½" BSP (15mm) ALUMINIUM / CAST IRON

MOCs Also Available: PP, PVDF, SS 316

23Litre (6gallon)
Inlet: 12.70mm (½" BSP)
Discharge: 12.70mm (½" BSP)
Air Inlet: 6.35mm (¼" BSP)
Air Exhaust: 12.70mm (½" BSP)
Dry: 1.45m (4.75 ft)
Wet: 2.83m (9.26 ft)
Dry: 0.50m (1.64 ft)
Wet: 0.90m (2.95 ft)
2mm (0.078")

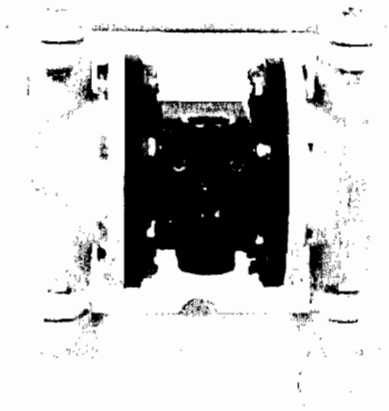

AOD 150 AL

ALSO AVAILABLE IN CAST IRON

AOD 150 CI

AOD 150

SPECIFICATIONS AND PERFORMANCE
1" BSP (25mm) ALUMINIUM / CAST IRON

PRICE

MOCs Also Available: PP, PVDF, SS 316

135Lpm (34gpm)
Inlet: 25.40mm (1" BSP)
Discharge: 25.40mm (1" BSP)
Air Inlet: 9.52mm (3/8")
Air Exhaust: 12.70mm (1/2")
Dry: 3.65m (12ft)
Wet: 4.59m (15ft)
Dry: [illegible]
Wet: 3.96m ([illegible])
[illegible]

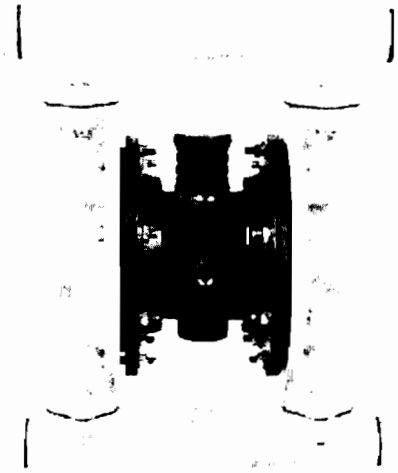

AOD 300 AL

ALSO AVAILABLE IN CAST IRON

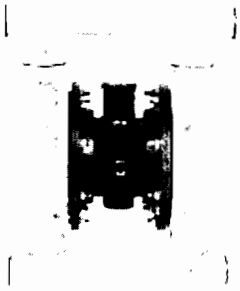

AOD 300 CI

AOD 300

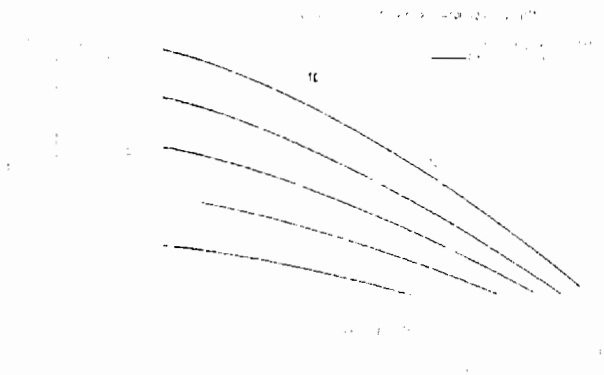

SPECIFICATIONS AND PERFORMANCE
1½" BSP (40mm) ALUMINIUM / CAST IRON

Models Also Available: PP, PVDF, SS 316

270Lpm (72gpm)
Inlet: 38.1mm (1½" BSP)
Discharge: 38.1mm (1½" BSP)
Air Inlet: 9.64mm (¼" BSP)
Air Exhaust: 12.70mm (½" BSP)
Dry: 4.57m (15')
Wet: 7.62m (25')
Dry: 3.05m (10')
Wet: 6.09m (20')
1.6m (0.75')

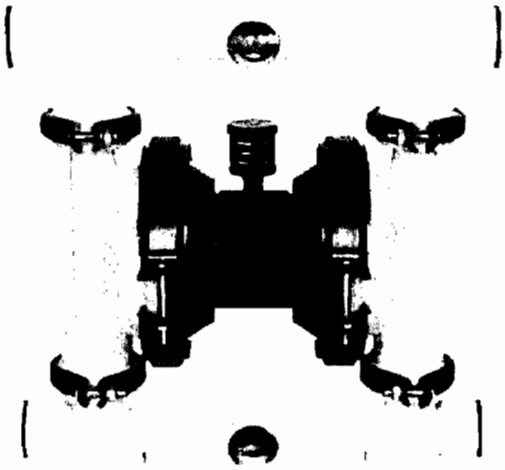

AOD 40 AL

ALSO AVAILABLE IN CAST IRON

AOD 40 CI

AOD 40

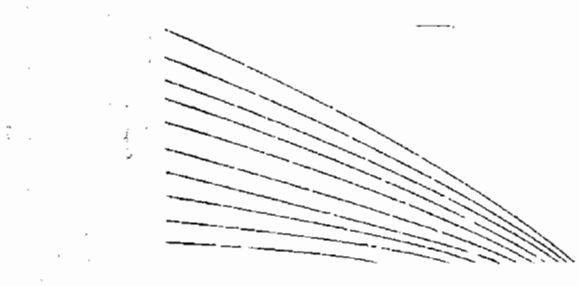

SPECIFICATIONS AND PERFORMANCE
2" BSP (50mm) ALUMINIUM / CAST IRON

PRICE

MOCs Also Available: PP, PVDF, SS 316

586Lpm (155gpm)
Inlet: 50.80mm (2" BSP)
Discharge: 50.80mm (2" BSP)
Air Inlet: 12.70mm (½" BSP)
Air Exhaust: 9.05mm (⅜" bolt)
Dry: 4.57m (15')
Wet: 7.62m (25')
Dry: 11.58m (70')
Wet: 6.09m (20')
5.35m (0.150')

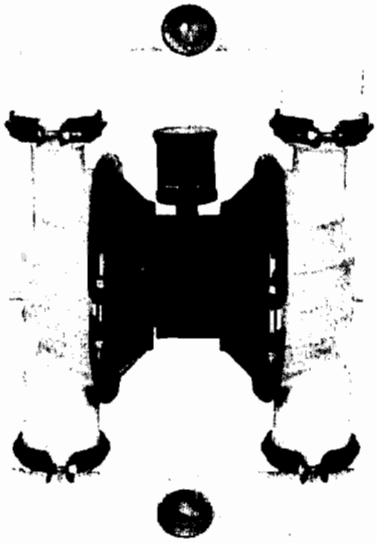

AOD 55 AL

ALSO AVAILABLE IN CAST IRON

AOD 55 CI

AOD 55

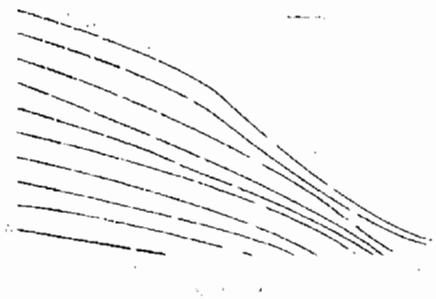

SPECIFICATIONS AND PERFORMANCE
3" BSP (80mm) ALUMINIUM / CAST IRON

MODS Also Available: PP PVDF SS316

900L/min (238 g/min)
Inlet: 76.20mm (3" BSP)
Discharge: 76.20mm (3" BSP)
Air Inlet: 12.70mm (1/2" BSP)
Air Exhaust: 19.05mm (3/4" BSP)
Dry: 6.09m (20')
Wet: 7.62m (25')
Dry: 3.05m (10')
Wet: 6.09m (20')
19.10 N.m (0.750")

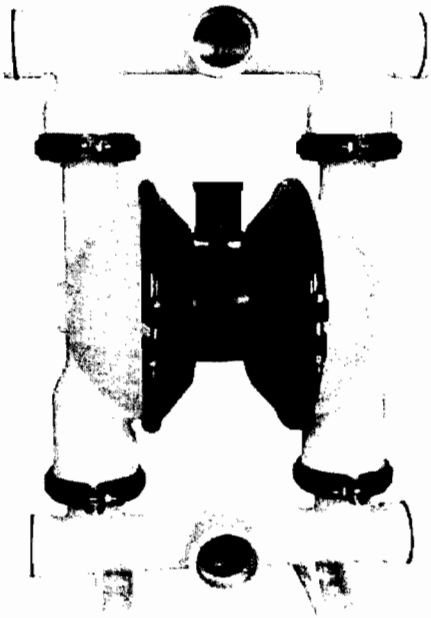

AOD 80 AL

ALSO AVAILABLE IN CAST IRON

AOD 80 CI

AOD 80

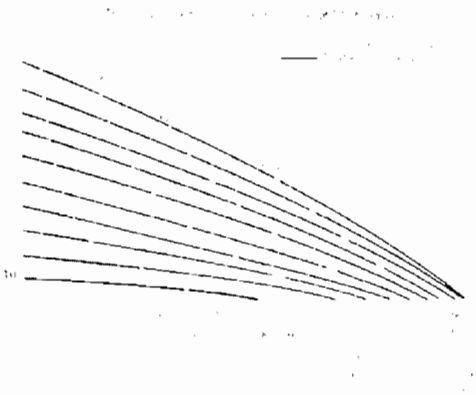

NEW!!

INTRODUCING:
SANITARY AND BIO-PHRAMACEUTICAL PUMPS

PRICE

by **Price Pumps Pvt.Ltd** offer a wide range of solutions for various food, beverage, dairy, personal care and bio-pharmaceutical applications. This newly launched range has been engineered to meet the highest standards and requirements in the industry. Our pumps have the versatility you require, safety you need and the capability of efficiently pumping a wide range of viscosities, solids and shear sensitive products. These pumps are offered with passivated stainless steel components, available in multiple sizes and with various surface finishes.

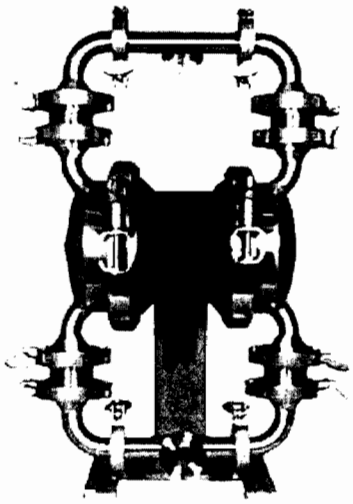

SIZE AVAILABLE: 1, 1½, 2"
(3" Size Under Developement)

FEATURES

- [illegible]
- Sizes available: [illegible]
- [illegible]
- Superior product containment
- [illegible]
- Sanitary & hygienic applications
- [illegible] Shear sensitive product handling
- [illegible] available
- [illegible]
- [illegible]
- Multiple certificate levels available
- [illegible]

PERFORMANCE DATA

- Max flow rates 487 lpm (137gpm) (Valve Ball)
- [illegible]
- [illegible]

DIFFICULT APPLICATION

- [illegible] Pulpes & Beverages
- [illegible] Fish & Meat [illegible]
- Dairy
- Prepared food
- Fruits, Vegetables & Concentrates
- Bio pharmaceuticals
- [illegible]
- Health & personal care
- [illegible]
- Chromatography, Separation, Purification
- [illegible]
- [illegible]
- [illegible]
- [illegible]
- [illegible]
- [illegible]
- [illegible]
- [illegible]

THE **PRICE** PUMP
INDUSTRIES SERVED

Automotive Industry: Grinding emulsion, oil, coolant, hydraulic fluid, sulfuric, automotive primer, soluble oil, varnish disposal, varnish additives, degreasing baths, cooling oil, water and glycol mixture, paint.

Aviation: Aircraft, fueling and drainage, satellite refueling, solid rocket propellant, missile silos.

Beverage Industry: Yeast, diatomaceous earth slurry, hop pulp, spent hops, sugar syrup, concentrates, gas/liquid mixtures, wine, fruit pulp, fruit juice, corn syrup.

Ceramics: Slip, glaze, enamel slip, effluent, clay, clay slurry, lime slurry, kaolin slurry.

Chemical Industry: Acids, alkalies, solvents, suspensions, dispersions, magnesium hydroxide, varnishes, strip waters, resins, latex, adhesives, effluent sludge, stabilizers, filter press, electrolytes.

Construction Industry: Sump and pit drainage, cement slurry, ceramic tile adhesive, rock slurry, cement coating, paints, texture spray.

Cosmetics: Lotions, creams, shampoos, emulsions, hand creams, surfactants, hair permanents, soaps.

Electronics Industry: Solvents, electroplating baths, ultrapure liquids, carrier fluids for ultrasonic washing, sulfuric, nitric and acid wastes, etching acids, MEK, acetone, polishing compounds.

Food: Brine, chocolate, vinegar, molasses, dog food, vegetable oil, soybean oil, honey, cat food, PC, animal blood.

Furniture Industry: Adhesives, varnishes, dispersions, solvents, stains, Elmer's Glue, white glue, glue, solvents, glue (5-6000 cps), epoxy, starch adhesives, spray packaging.

Mining: Sump, gallery drainage, water drainage, coal sludge and rock slurry, cement slurry, grouting mortar, of transfer, explosive slurry, adhesive, cement, foaming.

Municipalities: Tank and sump drainage, sewer cleaning, chemicals, contaminated surface water, emergency pumping, spill clean up, waste oil, oil water separators.

Paints & Coatings: Resins, solvents, acrylic, wood preservative, stain, concrete paints, varnishes, titanium dioxide slurry, primers, stains, dispersions, varnish cleaning baths, alkalyd resin.

Pharmaceutical Industry: Vegetables extracts, tablet bases, ointments, alcohols, filtering aids, ultra filration, Blood plasma, waste solvents, sump waste.

Plating: Anodic sludge, electroplating baths, varnishes, enamels, solvents, cleaning baths, filtering.

Pulp/Paper/Packaging: Latex, adhesives, paints, resins, printing inks, dispersions, TiO2 slurry, kaolin, clay, hydrogen peroxide.

Refineries: Tank roof drainage, oil sludge, tank cleaning, tank mud, drainage, portable pumping.

Road Tanker Trucks: Loading and draining of tank by means of pump on vehicle, tank vehicle washing, latex, acids, spraying, foaming.

Shipbuilding: Tank and bilge drainage, ship cleaning, stripping, painting, swimming, seawater.

Smelters, Foundries & Dye Casting: Mold slurry, hydroxide and carbide slurry, dust scrubbing slurry, back wash for flushing of dies, mold release.

Textile & Carpet: Dyeing chemical, scotch guard, starch and sizing, resins, dyes, latex.

Water and Sewage Treatment: Milk of lime, thin slurry, effluents, chemicals, charging of filter presses, polymer, waste water.

Utility: Contaminated liquids, charging of scrubbers, milk of lime, transformer oil, resins.

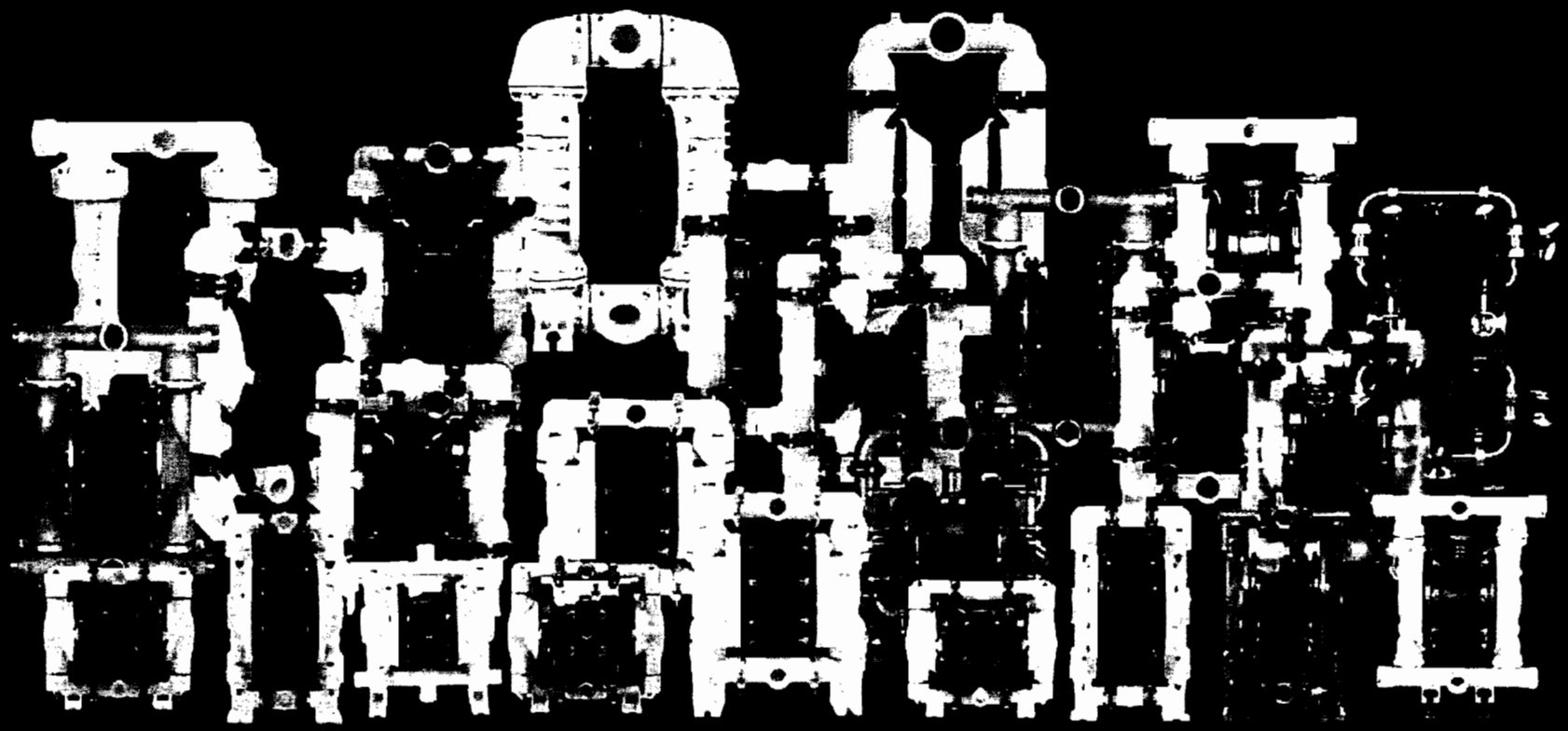

AVAILABLE MATERIALS OF CONSTRUCTION - PUMPS									
Section/discharge size	**½" (15mm)**		**1" (25mm)**		**1½" (40mm)**		**2" (50mm)**	**3" (75mm)**	
Wetted Components									
Polypropylene (PP)	✓	✓	✓		✓	✓	✓	✓	✓
Polyvinylidene Fluoride (PVDF)	✓	✓	✓		✓	✓	✓	✓	✓
Stainless Steel (SS)	✓	✓	✓	✓	✓	✓	✓	✓	✓
Aluminium (AL)	✓		✓			✓		✓	✓
Cast Iron (CI)			✓			✓		✓	✓

Please consult us for your requirements for Hastelloy C, Alloy 20 etc

PRICE

PRICE PUMPS PVT. LTD.
Air Operated Double Diaphragm Pumps

PRICE

PRODUCTS

PRODUCT BROCHURE

WHY
a PRICE pump works

HOW
a PRICE pump works

WHERE
a PRICE pump works

CE

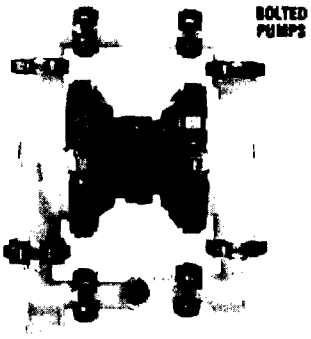

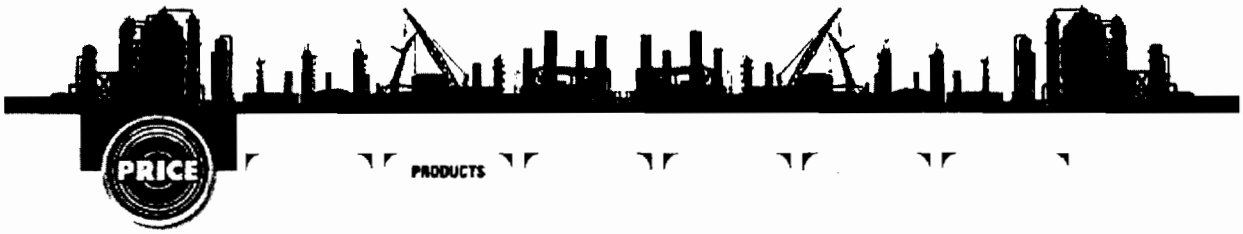

PRODUCTS

Download Product Brochure

PRODUCT BROCHURE

in pdf format

WHY
a PRICE pump works

HOW
a PRICE pump works

WHERE
a PRICE pump works

Material Of Construction	Sizes
Polypropylene (PP)	• [illegible]
Polyvinylidene Fluoride (PVDF)	• [illegible]
Stainless Steel (SS)	• [illegible]
Aluminium (AL)	• [illegible]
Cast Iron (CI)	• [illegible]
Glass Filled Polypropylene (GFPP)	• [illegible]

BACK

PRICE

PRODUCTS

1/2" (15mm) Polyvinylidene Fluoride

PRODUCT BROCHURE

WHY
a PRICE pump works

HOW
a PRICE pump works

WHERE
a PRICE pump works

CE

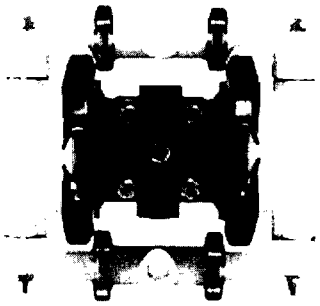

ADD 15 PVDF

Max Flow Rate :

Port Size : Inlet
Discharge
Air Inlet
Air Exhaust

Suction Lift : Dry
Wet

Teflon : Dry
Wet

Max Particle Size (Dia) :

PDF
PDF

ADD 15 PVDF

PDF1
PDF2 Disassembly & Reassembly Direction
PDF3

BACK

TOP

AOD15 PVDF

SR NO	DESCRIPTION	PART NO	QTY	M.O.C.
1	LIQUID CHAMBER	001501PF	2NOS.	PVDF
2	SUCTION BEND	001503PF	2NOS.	PVDF
3	DISCHARGE BEND	001504PF	2NOS.	PVDF
4	SUCTION/DISCHARGE TEE	001505PF	2NOS.	PVDF
5	HOLDING PLATE	001506HY	2NOS.	HYLEM
6	LOCK NUT	001507PF	2NOS.	PVDF
7	DIAPHRAGM	001508NP	2NOS.	NEOPRENE
		001508VI	2NOS.	VITON
		001508NI	2NOS.	NITRILE
		001508EP	2NOS.	EPDM
		001508BU	2NOS.	BUTYL
		001508TF	2NOS.	TEFLON
		001508SP	2NOS.	SANTOPRENE
8	BACKUP DIAPHRGM FO TEFLON	001509NI	2NOS.	NITRILE
9	NRV BALLS	001510TF	4NOS.	TEFLON
10	BALL SEAT	001512PF	4NOS.	PVDF
11	SEAT ENVELOP GASKET	001513TG	4NOS.	TEFLON
	SEAT ENVELOP GASKET RING	001513NG	4NOS.	NEOPRENE
12	TEE ENVELOP GASKET	001515TG	4NOS.	TEFLON
	TEE ENVELOP GASKET RING	001515NG	4NOS.	NEOPRENE
13	TEE CLAMPS	001516MS	4NOS.	M.S.
		001516SS	4NOS.	S.S.
14	CHAMBER CLAMPS	001518MS	2NOS.	M.S.
		001518SS	2NOS.	S.S.
15	MOUNTING PADS	001521NP	4NOS.	NEOPRENE
16	BALL CAGE	001524PF	4NOS.	PVDF
17	NIPPLE	001523PF	2NOS.	PVDF
18	CHAMBER CLAMP BOLTS	00CB01SS	4NOS.	S.S.
19	SUCTION DISCHARGE STUD	00ST01SS	4NOS.	S.S.
20	TEE CLAMP BOLTS	00BT01SS	8NOS	S.S.

AOD15 AIR ASSEMBLY

SR. NO	DESCRIPTION	PART NO	QTY	M.O.C.
1	SHAFT BLOCK WITH COVER	001551GP	1NOS	GFPP
2	MAIN SHAFT	001552MS	1NOS	STEEL
3	PILOT SHAFT BUSH	001553BR	1NOS	BRASS
4	PILOT SHFT	001554SS	1NOS	S.S.
5	PILOT SHAFT BUSH CIRCLIP	001568MS	1NOS	M.S.
6	PISTON BLOCK COVER GASKET	001556GR	1NOS	GRAPHITE
7	PISTON BLOCK GASKET	001557GR	1NOS	GRAPHITE
8	PISTON BLOCK COVER	001559GP	1NOS	GFPP
9	PISTON BLOCK CIRCLIP	001560MS	2NOS	STEEL
10	PISTON BLOCK CAP	001561HD	2NOS	HDP
11	PISTON BLOCK	001562GP	1NOS	GFPP
12	PISTON	001563AL	1NOS	ALUMINIUM
13	PISTON BLOCK CAP "O" RING	001564NP	2NOS	NEOPRENE
14	PISTON BLOCK BUSH "O" RING	004067NP	6NOS	NEOPRENE
15	EXHAUST	004066GP	1NOS	GFPP
16	AIR NIPPLE	001569BR	1NOS	BRASS
17	SHAFT BLOCK "O" RING	001571NP	2NOS	NEOPRENE
18	EXHAUST PLATE	001572GP	1NOS	GFPP
19	PILOT SHAFT "O" RING	001573NP	4NOS	NEOPRENE
20	PILOT SHAFT LOCATING "O" RING	001574NP	2NOS	NEOPRENE
21	PILOT SHAFT BUSH "O" RING	001565NP	6NOS	NEOPRENE
22	P.B.HOLDING BOLT	00BT02SS	4NOS	S.S.

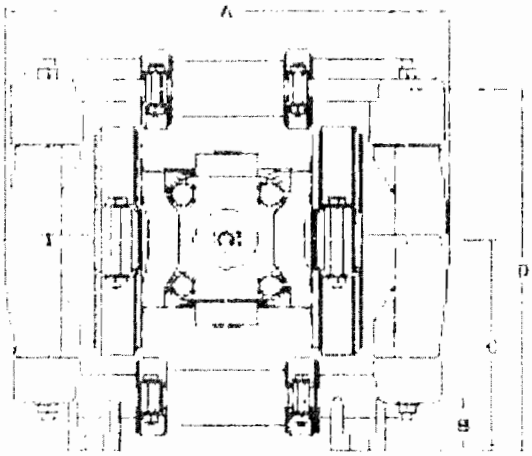

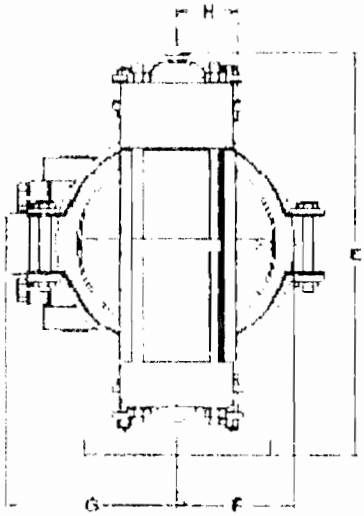

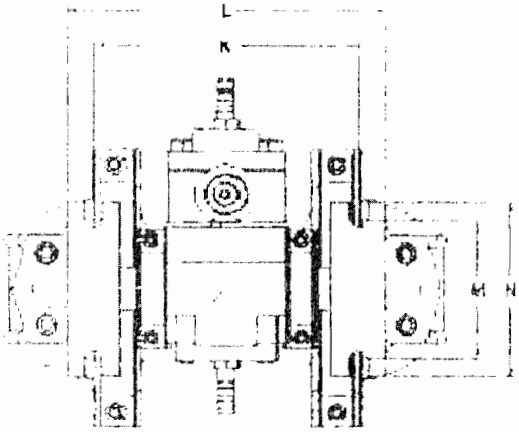

	M.M.	INCH
A	252	9.9"
B	32	1.3"
C	127	5"
D	220	8.7"
E	245	9.6"
F	95	3.9"
G	92	3.6"
H	40	1.6"
K	150	7.1"
L	180	3.9"
M	95	3.9"
N	100	3.9"

ADD-15-PVDF

ADD-15-PVDF

PRICE PUMPS PVT. LTD.

PRICE

PRODUCTS

1" (25mm) Polyvinylidene Fluoride

PRODUCT BROCHURE

WHY
a PRICE pump works

HOW
a PRICE pump works

WHERE
a PRICE pump works

CE

AOD 30 PVDF

Max Flow Rate : [illegible]

Port Size : Inlet: [illegible] BSP
Discharge: [illegible] BSP
Air Inlet: [illegible] BSP
Air Exhaust: [illegible] BSP

Suction Lift : Dry: [illegible]
Wet: [illegible]

Teflon : Dry: [illegible]
Wet: [illegible]

Max Particle Size (Dia) : [illegible]

PDF: Temperature Limits
PDF: Chemical Resistance Guide

AOD 30 PVDF

PDF1 Part List Exploded View & Dimension
PDF2 Disassembly & Re-assembly Direction with Teflon Diaphragm
PDF3: Manual

BACK TOP

AOD30 PVDF

SR NO	DESCRIPTION	PART NO	QTY	M.O.C.
1	LIQUID CHAMBER	003001PF	2NOS.	PVDF
2	AIR COVER	003002GP	2NOS.	GFPP
		003002AL	2NOS.	AL.
3	SUCTION BEND	003003PF	2NOS.	PVDF
4	DISCHARGE BEND	003004PF	2NOS.	PVDF
5	SUCTION/DISCHARGE TEE	003005PF	2NOS.	PVDF
6	HOLDING PLATE	003006MS	2NOS.	M.S.
7	LOCK NUT	003007PF	2NOS.	PVDF
8	DIAPHRAGM	003008NP	2NOS.	NEOPRENE
		003008VI	2NOS.	VITON
		003008NI	2NOS.	NITRILE
		003008EP	2NOS.	EPDM
		003008BU	2NOS.	BUTYL
		003008TF	2NOS.	TEFLON
		003008SP	2NOS.	SANTOPRENE
9	BACKUP DIAPHRGM OF TEFLON	003009NI	2NOS.	NITRILE
10	NRV BALLS	003010TF	4NOS.	TEFLON
11	BALL SEAT	003012PF	4NOS.	PVDF
12	TOP SEAT "O" RING	003013NP	4NOS.	NEOPRENE
		003013VI	4NOS.	VITON
13	BOTTOM SEAT "O" RING	003015NP	4NOS.	NEOPRENE
		003015VI	4NOS.	VITON
14	TEE "O" RING	003015NP	4NOS.	NEOPRENE
		003015VI	4NOS.	VITON
15	TEE CLAMPS	003016MS	4NOS.	M.S.
		003016SS	4NOS.	S.S.
16	MOUNTING PADS	003021NP	4NOS.	NEOPRENE
17	BALL CAGE	003024PF	2NOS.	PVDF
18	NIPPLE	003023PF	2NOS.	PVDF
19	CHAMBER CLAMP BOLTS	00BT03SS	4NOS.	S.S.
20	SUCTION DISCHARGE STUD	00ST02SS	4NOS.	S.S.
21	TEE CLAMP BOLTS	00CB02SS	8NOS	S.S.

AOD30 AIR ASSEMBLY

SR. NO	DESCRIPTION	PART NO	QTY	M.O.C.
1	SHAFT BLOCK	003051GP	1NOS	GFPP
2	MAIN SHAFT	003052MS	1NOS	STEEL
3	PILOT BUSH	004053BR	5NOS	BRASS
4	PILOT SHAFT	003054SS	1NOS	S.S.
5	PISTON RING	004068SI	3NOS	PLASTIC
6	AIR COVER GASKET	004055GR	2NOS	GRAPHITE
7	PISTON BLOCK COVER GASKET	004056GR	1NOS	GRAPHITE
8	PISTON BLOCK GASKET	004057GR	1NOS	GRAPHITE
9	PISTON BLOCK COVER	004059GP	1NOS	GFPP
10	PISTON BLOCK CAP CIRCLIP	004060MS	2NOS	STEEL
11	PISTON BLOCK CAP	004061HD	2NOS	HDP
12	PISTON BLOCK	004062GP	1NOS	GFPP
13	PISTON	004063AL	1NOS	ALUMINIUM
14	PISTON BLOCK CAP "O" RING	004064NP	2NOS	NEOPRENE
15	PILOT BUSH "O" RING	004065NP	6NOS	NEOPRENE
16	EXHAUST	004066GP	1NOS	GFPP
17	PISTON "O" RING	004067NP	3NOS	NEOPRENE
18	AIR NIPPLE	004069BR	1NOS	BRASS
19	SHAFT BLOCK "O" RING	003071NP	2NOS	NEOPRENE
20	PILOT BUSH RING	003072BR	2NOS	BRASS
21	MAIN SHAFT BUFFER	003073NP	2NOS	NEOPRENE
22	PILOT SAHFT BUFFER	003074NP	2NOS	NEOPRENE
23	AIR COVER BOLTS	00LN03ST	8NOS	STEEL
24	P.B. HOLDING BOLTS	00LN02ST	4NOS	STEEL

PRICE PUMPS PVT. LTD.

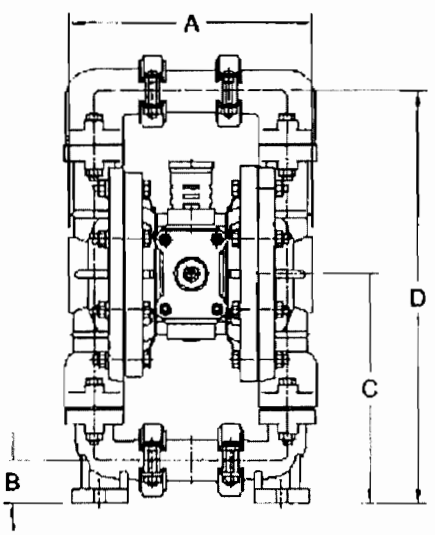

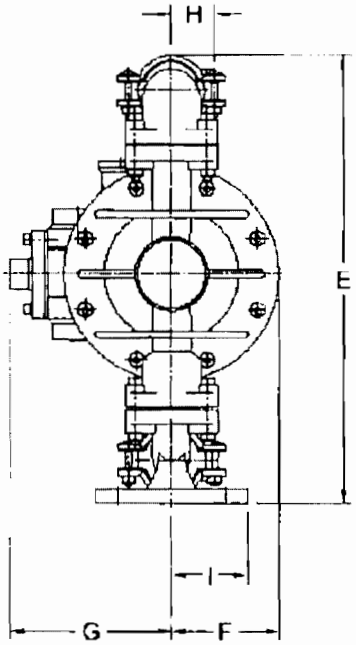

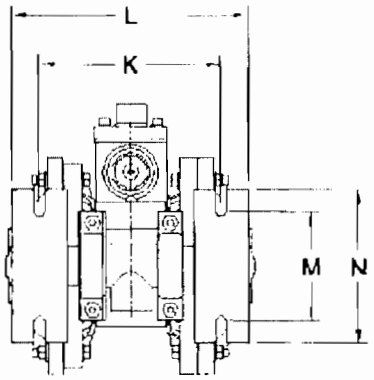

	M.M.	INCH
A	255	10"
B	45	1.7"
C	220	8.7"
D	412	16.2"
E	450	17.7"
F	110	4.3"
G	155	6.2"
H	45	1.8"
I	75	2.8"
K	178	7"
L	230	9.1"
M	122	4.9"
N	150	5.9"

AOD 30 PVDF

PRICE

PRODUCTS

1 1/2" (40mm) Polyvinylidene Fluoride

PRODUCT BROCHURE

WHY a PRICE pump works

HOW a PRICE pump works

WHERE a PRICE pump works

CE

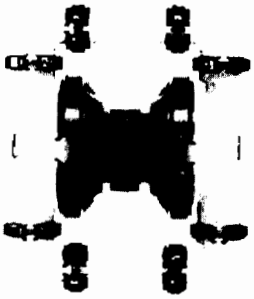

AOD 40 PVDF

NEW! BOLTED DESIGN

Max Flow Rate :

Port Size : Inlet: 38.10mm (1.5" BSP)
Discharge: 38.10mm (1.5" BSP)
Air Inlet: 9.64mm (0.38" BSP)
Air Exhaust: 12.70mm (1/2" BSP)

Suction Lift : Dry
Wet

Teflon : Dry
Wet

Max Particle Size (Dia) : 4.76mm (0.188")

PDF Temperature Limits

PDF Chemical Resistance Guide

AOD 40 PVDF

PDF1 Parts List, Exploded Views & Dimension

PDF2 Disassembly & Re-assembly Direction with Teflon Diaphragms

PDF3 Manual

AOD 400 PVDF

PDF1 Parts List, Exploded Views & Dimension

PDF2 Disassembly & Re-assembly Direction with Teflon Diaphragms

PDF3 Manual

BACK TOP

AOD40 PVDF

SR NO	DESCRIPTION	PART NO	QTY	M.O.C.
1	LIQUID CHAMBER	004001PF	2NOS.	PVDF
2	AIR COVER	004002GP	2NOS.	GFPP
		004002AL	2NOS.	ALU.
3	SUCTION BEND	004003PF	2NOS.	PVDF
4	DISCHARGE BEND	004004PF	2NOS.	PVDF
5	SUCTION DISCHARGE TEE	004005PF	2NOS.	PVDF
6	HOLDING PLATE	004006MS	2NOS.	M.S.
7	LOCK NUT	NP4007PP	2NOS.	P.P.
		TF4007PP	2NOS.	P.P.
8	DIAPHRAGM	004008NP	2NOS.	NEOPRENE
		004008VI	2NOS.	VITON
		004008NT	2NOS.	NITRILE
		004008EP	2NOS.	EPDM
		004008BT	2NOS.	BUTYL
		004008TF	2NOS.	TEFLON
		004008SP	2NOS.	SANTOPRENE
9	BACKUP DIAPHRGM FO R TEFLON	004009NT	2NOS.	NITRILE
10	NRV BALLS	004010TF	4NOS.	TEFLON
		004010NP	4NOS.	NEOPRENE
11	BALL SEAT	004012PF	4NOS.	P.P.
12	SEAT "O" RING	004013NP	4NOS.	NEOPRENE
		004013VI	4NOS.	VITON
13	TEE "O" RING	004015NP	4NOS.	NEOPRENE
		004015VI	4NOS.	VITON
14	TEE CLAMPS	004016MS	4 PAIRS	M.S.
		004016SS	4 PAIRS	S.S.
15	SUCTION DISCHARGE CLAMP	004017MS	4 PAIRS	M.S.
		004017SS	4 PAIRS	S.S.
16	CHAMBER CLAMP	004018MS	2 PAIRS	M.S.
		004018SS	2 PAIRS	S.S.
17	SUCTION/DISCHARGE FLANGES	004020PP	2NOS.	P.P.
18	SUCTION/DISCHARGE STUB END	004019PF	2NOS.	PVDF
19	MOUNTING PADS	004021NP	4NOS.	NEOPRENE
20	BALL CAGE	004024PF	4NOS.	PVDF
21	CHAMBER CLAMP BOLTS	00CB03SS	4NOS.	S.S.
22	SUCTION DISCHARGE CLAMP BOLT	00CB04SS	8NOS.	S.S.
23	SUCTION DISCHARGE TEE CLAMP BOLT	00CB05SS	8NOS.	S.S.

AOD40 AIR ASSEMBLY

SR. NO	DESCRIPTION	PART NO	QTY	M.O.C.
1	SHAFT BLOCK	004051GP	1NOS	GFPP
2	MAIN SHAFT	004052MS	1NOS	STEEL
3	PILOT BUSH	004053BR	5NOS	BRASS
4	PILOT SHAFT	004054SS	1NOS	S.S.
5	PISTON RING	004068SI	3NOS	PLASTIC
6	AIR COVER GASKET	004055GR	2NOS	GRAPHITE
7	PISTON BLOCK COVER GASKET	004056GR	1NOS	GRAPHITE
8	PISTON BLOCK GASKET	004057GR	1NOS	GRAPHITE
9	PISTON BLOCK COVER	004059GP	1NOS	GFPP
10	PISTON BLOCK CAP CIRCLIP	004060MS	2NOS	STEEL
11	PISTON BLOCK CAP	004061HD	2NOS	HDP
12	PISTON BLOCK	004062GP	1NOS	GFPP
13	PISTON	004063AL	1NOS	ALUMINIUM
14	PISTON BLOCK CAP "O" RING	004064NP	2NOS	NEOPRENE
15	PILOT BUSH "O" RING	004065NP	6NOS	NEOPRENE
16	EXHAUST	004066GP	1NOS	GFPP
17	PISTON "O" RING	004067NP	3NOS	NEOPRENE
18	AIR NIPPLE	004069BR	1NOS	BRASS
19	SHAFT BLOCK "O" RING	004071NP	2NOS	NEOPRENE
20	PILOT BUSH RING	004072BR	2NOS	BRASS
21	MAIN SHAFT BUFFER	004073NP	2NOS	NEOPRENE
22	PILOT SHAFT BUFFER	004074NP	2NOS	NEOPRENE
23	AIR COVER BOLTS	00LN03ST	8NOS	STEEL
24	P.B. HOLDING BOLTS	00LN02ST	4NOS	STEEL

PRICE PUMPS PVT. LTD.

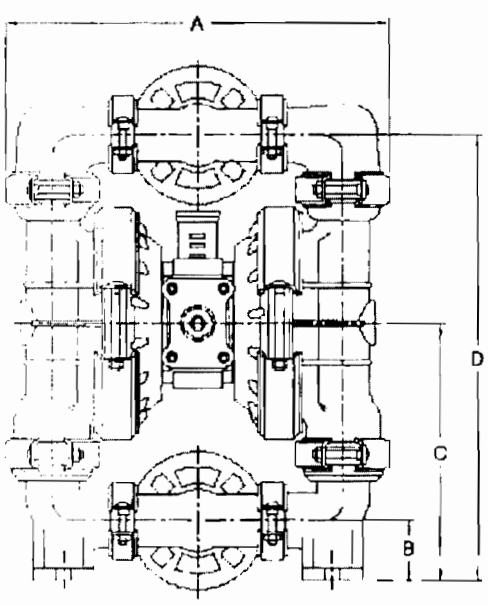

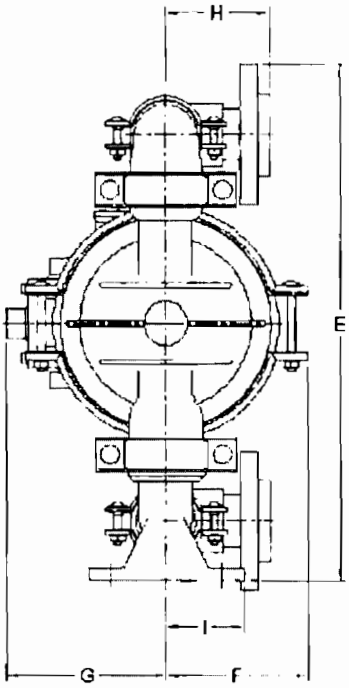

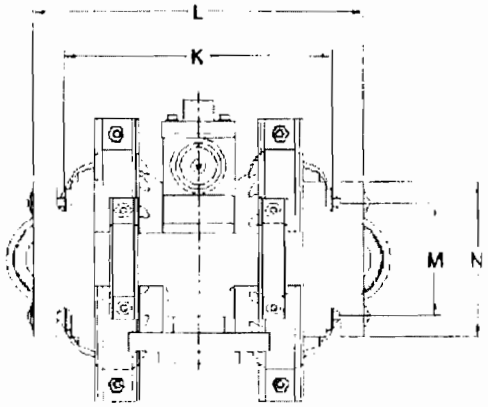

	M.M.	INCH
A	415	16.2"
B	60	2.4"
C	270	10.6"
D	483	19"
E	555	21.6"
F	145	5.6"
G	157	6.1"
H	105	4"
I	78	3.1"
K	282	11.1"
L	340	13.4"
M	125	6.7"
N	155	6.2"

AOD 40 PVDF

BS-400PVDF

SRNO	DESCRIPTION	PARTNO	QTY	M.O.C
1	LIQUID CHAMBER	BT4001PVDF	2NOS	PVDF
2	AIR COVER	BT4002GP	2NOS	GFPP
		BT4002AL	2NOS	ALU.
3	SUCTION MANIFLOD	BT4003PP	2NOS	PVDF
4	DISCHARGE MANIFOLD	BT4004PP	2NOS	PVDF
5				
6	HOLDING PLATE	BT4006MS	2MOS	MS
7	LOCK NUT	BT4007PVDF	2NOS	PVDF
		TF4007PVDF	2NOS	PVDF
8	DIAPHRAGM	004008NP	2NOS	NEOPRENE
		004008VI	2NOS	VITON
		004008NT	2NOS	NITRILE
		004008EP	2NOS	EPDM
		004008BT	2NOS	BUTYL
		004008TF	2NOS	TEFLON
		004008SP	2NOS	SANTOPRENE
9	BACK UP DIAPHRAGM FOR TEFLON	004009NT	2NOS	NITRILE
10	NRV BALLS	004010TF	4NOS	TEFLON
		004010NP	4NOS	NEOPRENE
11	BALLSEAT	BT4012PVDF	4NOS	PVDF
12	SEAT "O"RING BIG	BT4013NP	4NOS	NEOPRENE
		BT4013VI	4NOS	VITON
13	SEAT "O"RING SMALL	BT4014NP	4NOS	NEOPRENE
		BT4014VI	4NOS	VITON
14				
15				
16				
17	MOUNTING PADS	004021NP	4NOS	NEOPRENE
18	BALL CAGE	BT4024PVDF	4NOS	PVDF
19	CHAMBER BOLTS 1/2	BTCB03SS	16NOS	S.S
20	SUCTION DISCHARGELINE BOLT 3/6	BTCB04SS	16NOS	S.S

BS- 400 AIR ASSEMBLY

SR. NO	DESCRIPTION	PART NO	QTY	M.O.C.
1	SHAFT BLOCK	004051GP	1NOS	GFPP
2	MAIN SHAFT	004052MS	1NOS	STEEL
3	PILOT BUSH	004053BR	5NOS	BRASS
4	PILOT SHAFT	004054SS	1NOS	S.S.
5	PISTON RING	004068SI	3NOS	PLASTIC
6	AIR COVER GASKET	004055GR	2NOS	GRAPHITE
7	PISTON BLOCK COVER GASKET	004056GR	1NOS	GRAPHITE
8	PISTON BLOCK GASKET	004057GR	1NOS	GRAPHITE
9	PISTON BLOCK COVER	004059GP	1NOS	GFPP
10	PISTON BLOCK CAP CIRCLIP	004060MS	2NOS	STEEL
11	PISTON BLOCK CAP	004061HD	2NOS	HDP
12	PISTON BLOCK	004062GP	1NOS	GFPP
13	PISTON	004063AL	1NOS	ALUMINIUM
14	PISTON BLOCK CAP "O" RING	004064NP	2NOS	NEOPRENE
15	PILOT BUSH "O" RING	004065NP	6NOS	NEOPRENE
16	EXHAUST	004066GP	1NOS	GFPP
17	PISTON "O" RING	004067NP	3NOS	NEOPRENE
18	AIR NIPPLE	004069BR	1NOS	BRASS
19	SHAFT BLOCK "O" RING	004071NP	2NOS	NEOPRENE
20	PILOT BUSH RING	004072BR	2NOS	BRASS
21	MAIN SHAFT BUFFER	004073NP	2NOS	NEOPRENE
22	PILOT SHAFT BUFFER	004074NP	2NOS	NEOPRENE
23	AIR COVER BOLTS	00LN03ST	8NOS	STEEL
24	P.B. HOLDING BOLTS	00LN02ST	4NOS	STEEL

PRICE PUMPS PVT. LTD.

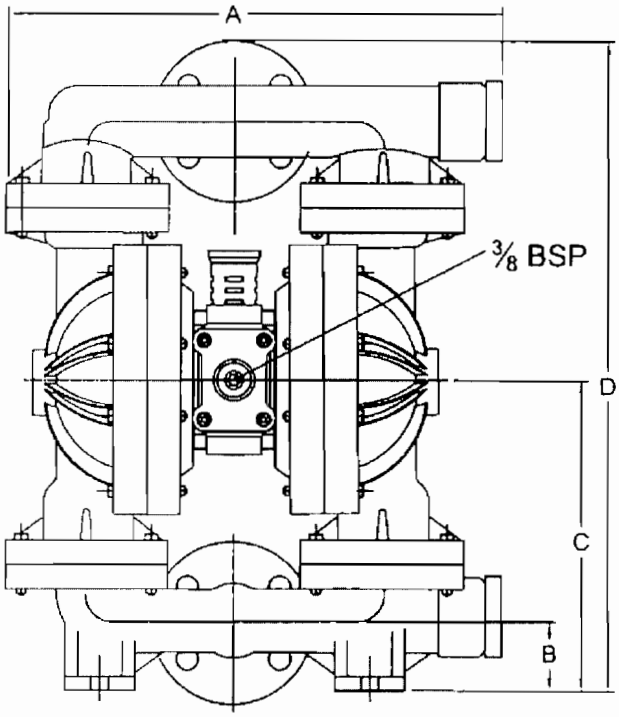

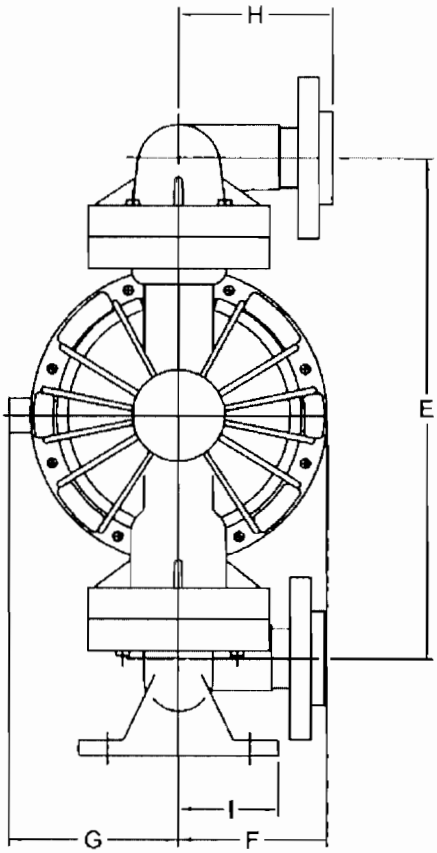

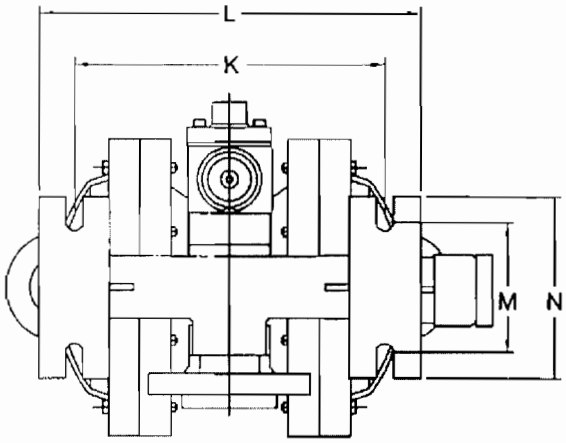

BS-400 (AOD-400) (PVDF)

	M.M.	INCH
A	470	18.7"
B	85	3.4"
C	335	13.2"
D	680	26.6"
E	520	20.5"
F	135	5.3"
G	160	6.3"
H	135	5.4"
I	104	4.1"
K	270	10.6"
L	325	12.8"
M	185	7.2"
N	205	8.1"

FLANGE DETAILS

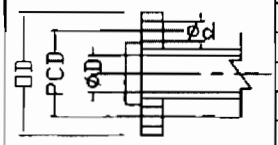

NOS.	1	1
PCD.	96	98
Ød	15	15
ØD1	143	143
ØD	39	39
	SUC.	DEL.

PRICE

PRODUCTS

2" (50mm) Polyvinylidene Fluoride

PRODUCT BROCHURE

WHY
a PRICE pump works

HOW
a PRICE pump works

WHERE
a PRICE pump works

CE

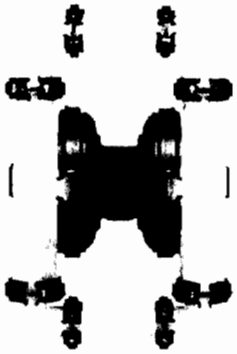

AOD 55 PVDF

AOD 500 PVDF

Max Flow Rate :

Port Size :

Suction Lift :

Teflon :

Max Particle Size (Dia) :

PDF

PDF

AOD 55 PVDF

PDF1

PDF2 Disassembly & Reassembly Direction

PDF3

AOD 500 PVDF

PDF1

PDF2 Disassembly & Reassembly Direction

PDF3

BACK

TOP

AOD55 PVDF

SR NO	DESCRIPTION	PART NO	QTY	M.O.C.
1	LIQUID CHAMBER	005501PF	2NOS.	PVDF
2	AIR COVER	005002GP	2NOS.	GFPP
		005002AL	2NOS.	ALU.
3	SUCTION BEND	05503PF	2NOS.	PVDF
4	DISCHARGE BEND	005504PF	2NOS.	PVDF
5	SUCTION DISCHARGE TEE	005505PF	2NOS.	PVDF
6	HOLDING PLATE	005006MS	2NOS.	M.S.
7	LOCK NUT	005507PF	2NOS.	PVDF
8	DIAPHRAGM	005008NP	2NOS.	NEOPRENE
		005008VI	2NOS.	VITON
		005008NT	2NOS.	NITRILE
		005008EP	2NOS.	EPDM
		005008BT	2NOS.	BUTYL
		005008TF	2NOS.	TEFLON
		005008SP	2NOS.	SANTOPRENE
9	BACKUP DIAPHRGM FO TEFLON	005009NT	2NOS.	NITRILE
10	NRV BALLS	005010TF	4NOS.	TEFLON
		005010NP	4NOS.	NEOPRENE
11	BALL SEAT	005512PF	4NOS.	P.P.
12	SEAT "O" RING	005513NP	4NOS.	NEOPRENE
		005513VI	4NOS.	VITON
13	TEE "O" RING	005015NP	4NOS.	NEOPRENE
		005015VI	4NOS.	VITON
14	TEE CLAMPS	005016MS	4 PAIRS	M.S.
		005016SS	4 PAIRS	S.S.
15	SUCTION DISCHARGE CLAMP	005017MS	4 PAIRS	M.S.
		005017SS	4 PAIRS	S.S.
16	CHAMBER CLAMP	005018MS	2 PAIRS	M.S.
		005018SS	2 PAIRS	S.S.
17	MOUNTING PAD	005021NP	4NOS.	NEOPRENE
18	BALL CAGE	005524PF	4NOS.	PVDF
19	CHAMBER CLAMP BOLTS	00CB03SS	4NOS.	S.S.
20	SUCTION DISCHARGE CLAMP BOLT	00CB04SS	8NOS.	S.S.
21	SUCTION DISCHARGE TEE CLAMP BOLT	00CB04SS	8NOS.	S.S.

AOD50 AIR ASSEMBLY

SR. NO	DESCRIPTION	PART NO	QTY	M.O.C.
1	SHAFT BLOCK	005551GP	1	GFPP
2	MAIN SHAFT	005552SS	1	STEEL
3	PILOT BUSH	004053BR	5	BRASS
4	PILOT SHAFT	004054SS	1	S.S.
5	PISTON RING	005568SI	3	PLASTIC
6	AIR COVER GASKET	005555GR	2	GRAPHITE
7	PISTON BLOCK COVER GASKET	005556GR	1	GRAPHITE
8	PISTON BLOCK GASKET	005557GR	1	GRAPHITE
9	PISTON BLOCK COVER	005559GP	1	GFPP
10	PISTON BLOCK CAP CIRCLIP	005560MS	2	STEEL
11	PISTON BLOCK CAP	005561HD	2	HDP
12	PISTON BLOCK	005562GP	1	GFPP
13	PISTON	005563AL	1	ALUMINIUM
14	PISTON BLOCK CAP "O" RING	005564NP	2	NEOPRENE
15	PILOT BUSH "O" RING	004065NP	6	NEOPRENE
16	EXHAUST	005566GP	1	GFPP
17	PISTON "O" RING	005567NP	3	NEOPRENE
18	AIR NIPPLE	005569BR	1	BRASS
19	SHAFT BLOCK "O" RING	004071NP	2	NEOPRENE
20	PILOT BUSH RING	004072BR	2	BRASS
21	MAIN SHAFT BUFFER	005573NP	2	NEOPRENE
22	PILOT SAHFT BUFFER	005574NP	2	NEOPRENE
23	AIR COVER BOLT	00LN03MS	10	STEEL
24	P.B. HOLDING BOLT	00LN02MS	4	STEEL

PRICE PUMPS PVT. LTD.

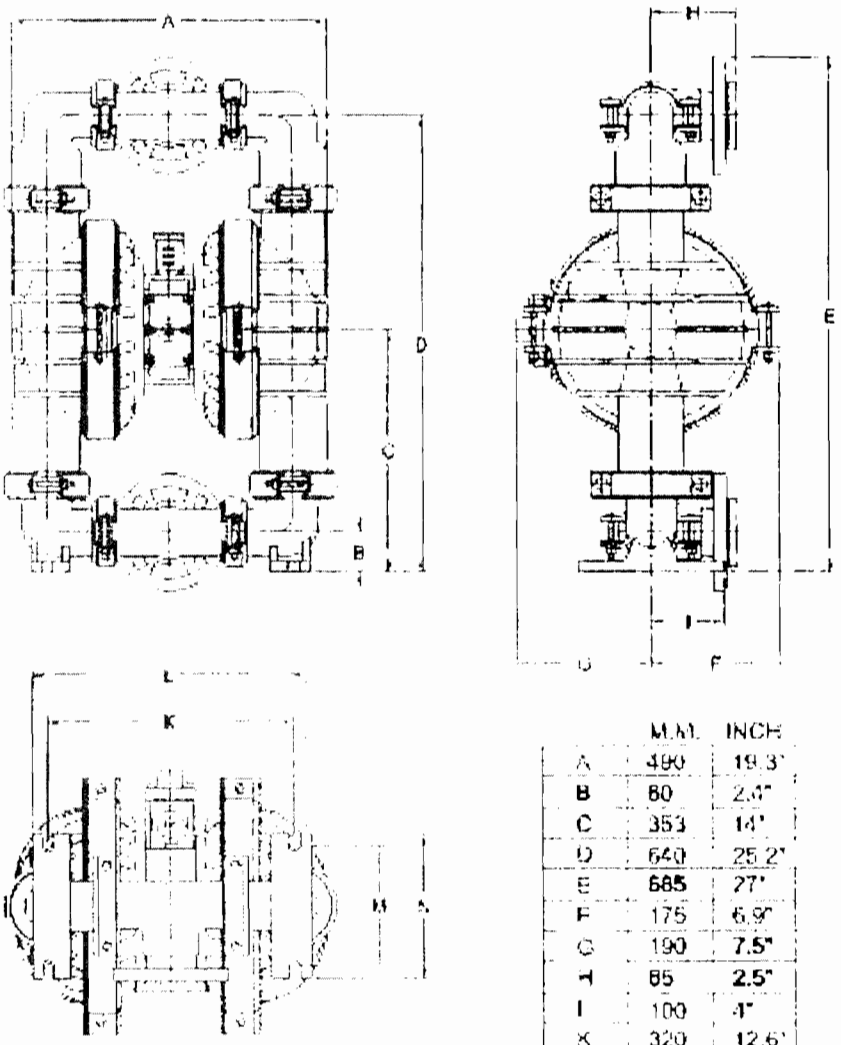

	M.M.	INCH
A	490	19.3"
B	60	2.4"
C	353	14"
D	640	25.2"
E	685	27"
F	175	6.9"
G	190	7.5"
H	65	2.5"
I	100	4"
K	320	12.6"
L	390	15.4"
M	175	6.9"
N	200	7.9"

AOD 55 PVDF

BS-500PVDF

SRNO	DESCRIPTION	PARTNO	QTY	M.O.C
1	LIQUID CHAMBER	BT5001PVDF	2NOS	PVDF
2	AIR COVER	BT5002GP	2NOS	GFPP
		BT5002AL	2NOS	ALU.
3	SUCTION MANIFLOD	BT5003PVDF	2NOS	PVDF
4	DISCHARGE MANIFOLD	BT5004PVDF	2NOS	PVDF
5				
6	HOLDING PLATE	0050006MS	2MOS	MS
7	LOCK NUT	NP5007PVDF	2NOS	PVDF
		TF5007PVDF	2NOS	PVDF
8	DIAPHRAGM	005008NP	2NOS	NEOPRENE
		005008VI	2NOS	VITON
		005008NT	2NOS	NITRILE
		005008EP	2NOS	EPDM
		005008BT	2NOS	BUTYL
		005008TF	2NOS	TEFLON
		005008SP	2NOS	SANTOPRENE
9	BACK UP DIAPHRAGM FOR TEFLON	005009NT	2NOS	NITRILE
10	NRV BALLS	005010TF	4NOS	TEFLON
		005010NP	4NOS	NEOPRENE
11	BALLSEAT	BT5012PP	4NOS	PVDF
12	SEAT "O"RING BIG	BT5013NP	4NOS	NEOPRENE
		BT5013VI	4NOS	VITON
13	SEAT "O"RING SMALL	BT5014NP	4NOS	NEOPRENE
		BT5014VI	4NOS	VITON
14				
15				
16				
17	MOUNTING PADS	005021NP	4NOS	NEOPRENE
18	BALL CAGE	BT5024PP	4NOS	PVDF
19	CHAMBER BOLTS 1/2		16NOS	S.S
20	SUCTION DISCHARGELINE BOLT 3/6		16NOS	S.S

BS-500 AIR ASSEMBLY

SR. NO	DESCRIPTION	PART NO	QTY	M.O.C.
1	SHAFT BLOCK	005551GP	1	GFPP
2	MAIN SHAFT	005552SS	1	STEEL
3	PILOT BUSH	004053BR	5	BRASS
4	PILOT SHAFT	004054SS	1	S.S.
5	PISTON RING	005568SI	3	PLASTIC
6	AIR COVER GASKET	005555GR	2	GRAPHITE
7	PISTON BLOCK COVER GASKET	005556GR	1	GRAPHITE
8	PISTON BLOCK GASKET	005557GR	1	GRAPHITE
9	PISTON BLOCK COVER	005559GP	1	GFPP
10	PISTON BLOCK CAP CIRCLIP	005560MS	2	STEEL
11	PISTON BLOCK CAP	005561HD	2	HDP
12	PISTON BLOCK	005562GP	1	GFPP
13	PISTON	005563AL	1	ALUMINIUM
14	PISTON BLOCK CAP "O" RING	005564NP	2	NEOPRENE
15	PILOT BUSH "O" RING	004065NP	6	NEOPRENE
16	EXHAUST	005566GP	1	GFPP
17	PISTON "O" RING	005567NP	3	NEOPRENE
18	AIR NIPPLE	005569BR	1	BRASS
19	SHAFT BLOCK "O" RING	004071NP	2	NEOPRENE
20	PILOT BUSH RING	004072BR	2	BRASS
21	MAIN SHAFT BUFFER	005573NP	2	NEOPRENE
22	PILOT SAHFT BUFFER	005574NP	2	NEOPRENE
23	AIR COVER BOLT	00LN03MS	10	STEEL
24	P.B. HOLDING BOLT	00LN02MS	4	STEEL

PRICE PUMPS PVT. LTD.

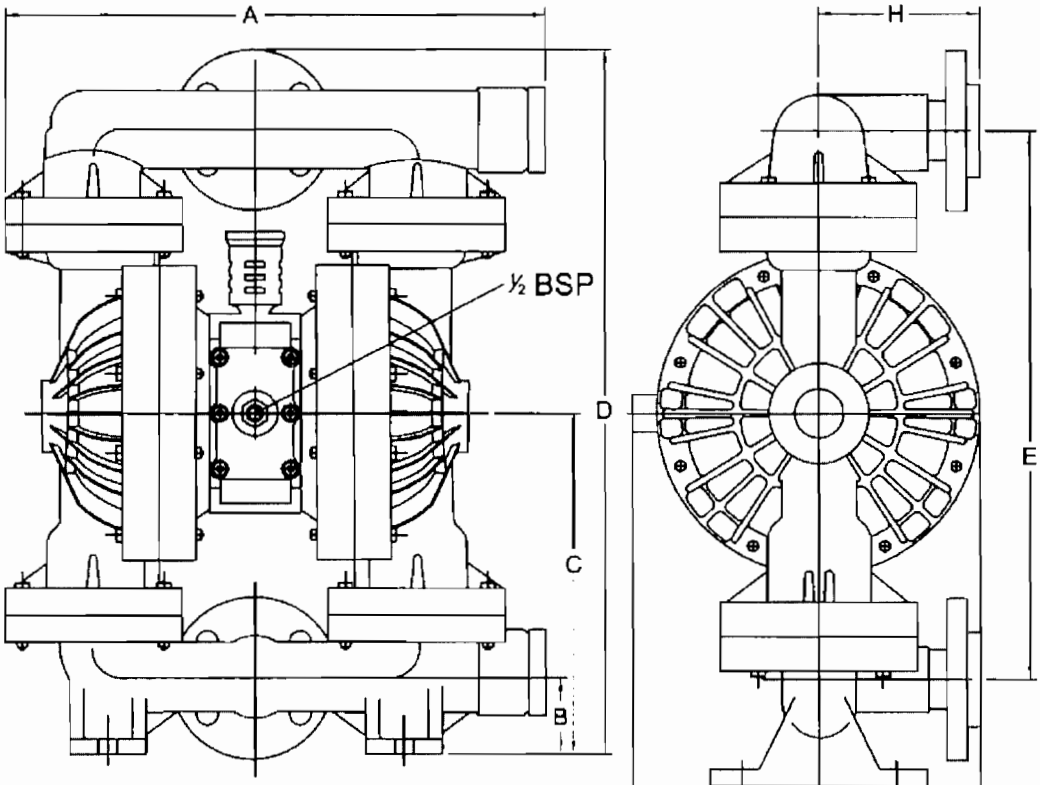

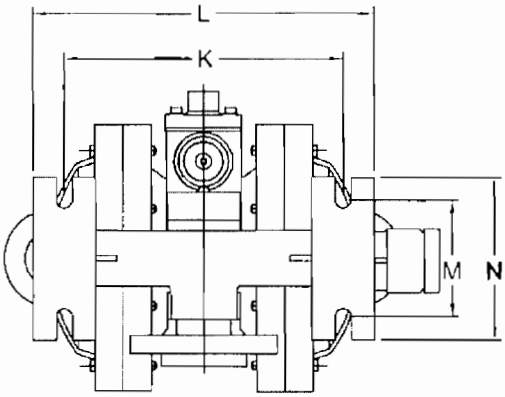

BS-500 (AOD-500) (PVDF)

	M.M.	INCH
A	600	23.6"
B	100	4"
C	390	15.3"
D	805	31.7"
E	630	24.7"
F	180	7.1"
G	190	7.5"
H	155	6.1"
I	115	4.5"
K	360	14.1"
L	425	16.8"
M	210	8.3"
N	230	9"

FLANGE DETAILS

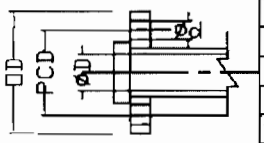

NOS.	1	1
PCD.	120	120
Ød	16	16
ØD1	162	162
ØD	45	45
	SUC.	DEL.

PRICE

PRODUCTS

3" (80mm) Polyvinylidene Fluoride

PRODUCT BROCHURE

WHY
a PRICE pump works

HOW
a PRICE pump works

WHERE
a PRICE pump works

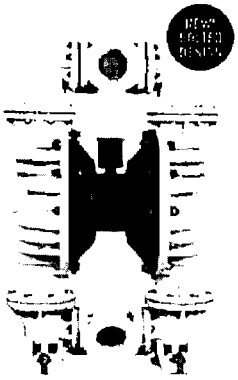

AOD 800 PVDF

CE

Max Flow Rate :

Port Size : Inlet
Discharge
Air Inlet
Air Exhaust

Suction Lift : Dry
Wet

Teflon : Dry
Wet

Max Particle Size (Dia) :

PDF
PDF

AOD 800 PVDF

PDF 1
PDF 2 Disassembly & Re-assembly Direction
PDF 3 Manual

BACK TOP

PRICE

CONGRATULA[illegible]SING YOUR NEW PRICE AODD PUMP!

Please [illegible] information carefully before you start your new pump.

THE PRICE PUMP
AIR OPERATED DIAPHRAGM PUMP

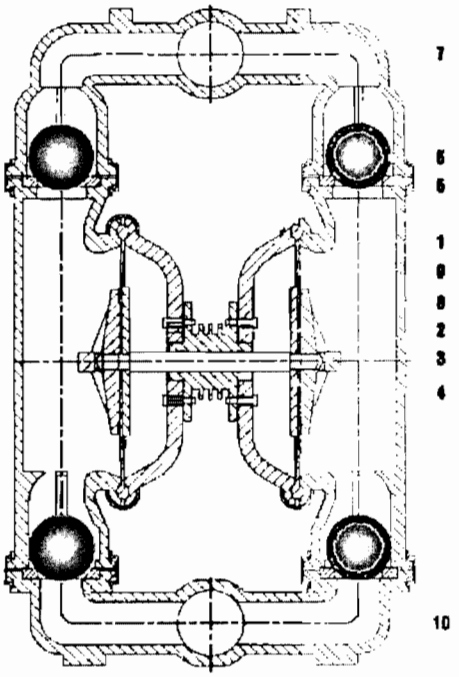

Air Chamber
The air chamber is the chamber that houses the air which powers the diaphragms.

Air Distribution System
The air distribution system is the heart of the pump. The air distribution system is the mechanism that shifts the pump in order to create suction and discharge strokes.

Lock Nut (Outer Diaphragm Piston)
The outer diaphragm pistons provide a means to connect the diaphragms to the reciprocating common shaft and to seal the liquid side from the air side of the diaphragm.

Holding plate (Inner Diaphragm Piston)
The inner piston is located on the air side of the pump and does not come into contact with the process fluid.

Check Valve Ball
PRICE air-operated pumps use suction and discharge check valves to produce directional flow of process fluid in the liquid chamber. The check valve balls seal and release on the check valve seats allowing for discharge and suction of process fluid to occur.

Check Valve Seat
The removable seats provide the ball valves a site to check.

Discharge Manifold
Process fluid exits the pump from the discharge port located on the discharge manifold at the top of the pump.

Liquid Chamber: The liquid chamber is filled with the process fluid during the suction stroke and is emptied during the discharge stroke. It is separated from the compressed air by the diaphragms.

Diaphragm: The diaphragm membrane provides for separation of the process fluid and the compressed air power source. To perform adequately, diaphragms should be of sufficient thickness and of appropriate material to prevent degradation or permeation in specific process fluid applications. PRICE offers a variety of diaphragm materials for your specific application requirements.

Inlet Manifold: Process fluid enters the pump from the intake port located on the inlet manifold at the bottom of the pump.

THE PRICE PUMP
HOW IT WORKS

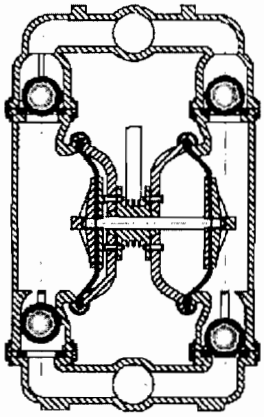

RIGHT STROKE

The air valve directs pressurized air to the back side of diaphragm A. The compressed air is applied directly to the liquid column separated by elastomeric diaphragms. The diaphragm acts as a separation membrane between the compressed air and liquid, balancing the load and removing mechanical stress from the diaphragm. The compressed air moves the diaphragm away from the center block of the pump. The opposite diaphragm is pulled in by the shaft connected to the pressurized diaphragm. Diaphragm B is on its suction stroke; air behind the diaphragm has been forced out to the atmosphere through the exhaust port of the pump. The movement of diaphragm B toward the center block of the pump creates a vacuum within chamber B. Atmospheric pressure forces fluid into the inlet manifold forcing the inlet valve ball off its seat. Liquid is free to move past the inlet valve ball and fill the liquid chamber (see shaded area).

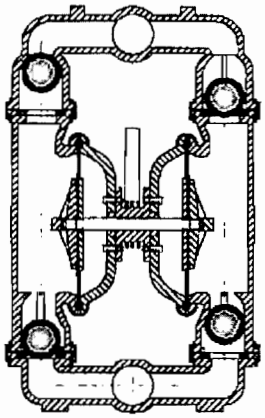

MID STROKE

When the pressurized diaphragm, diaphragm A, reaches the limit of its discharge stroke, the air valve redirects pressurized air to the back side of diaphragm B. The pressurized air forces diaphragm B away from the center block while pulling diaphragm A to the center block. Diaphragm B is now on its discharge stroke. Diaphragm B forces the inlet valve ball onto its seat due to the hydraulic forces developed in the liquid chamber and manifold of the pump. These same hydraulic forces lift the discharge valve ball off its seat, while the opposite discharge valve ball is forced onto its seat, forcing fluid to flow through the pump discharge. The movement of diaphragm A toward the center block of the pump creates a vacuum within liquid chamber A. Atmospheric pressure forces fluid into the inlet manifold of the pump. The inlet valve ball is forced off its seat allowing the fluid being pumped to fill the liquid chamber.

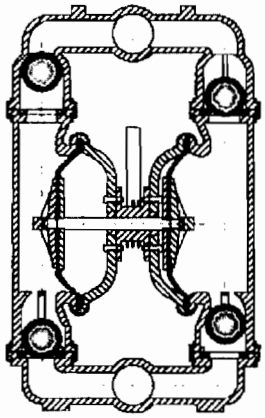

LEFT STROKE

At completion of the stroke, the air valve again redirects air to the back side of diaphragm A, which starts diaphragm B on its exhaust stroke. As the pump reaches its original starting point, each diaphragm has gone through one exhaust and one discharge stroke. This constitutes one complete pumping cycle. The pump may take several cycles to completely prime depending on the conditions of the application.

THE PRICE PUMP INSTALLATION VERSATILITY

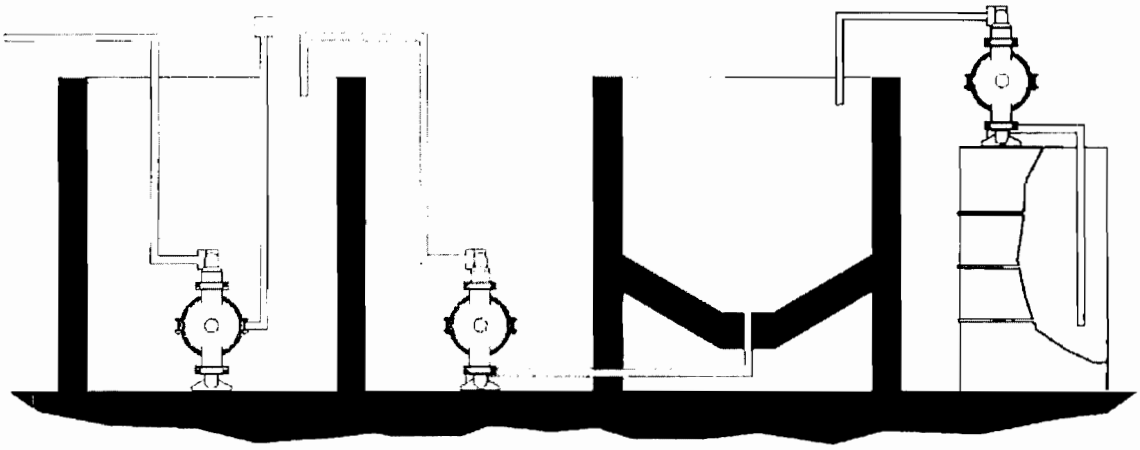

PRICE Pumps are totally submersible.
It is important that the air exhaust be ported above the level of the fluid, and that the materials of construction also be compatible with the fluid that the pump is submerged in.

Pump can draw from the bottom of the vessel. Preferred installation for viscous fluids. For emptying tanks it is important to limit the inlet fluid pressure to approximately 10 PSI (0.69 bar) for Teflon diaphragms and 15 PSI (1.03 bar) for rubber and santoprene diaphragms.

The suction capabilities of each pump may vary due to system design, product being pumped, and pump materials of construction. Please consult the factory with specific criteria.

THE PRICE PUMP APPLICATION VERSATILITY

Automotive Industry
Aviation
Food and Beverage
Ceramics
Chemical Industry
Latex
Mining
Construction Industry
Electronics Industry
Plating & Finishing
Pulp Paper Packaging
Refineries
Road Tanker Trucks
Shipbuilding
Smelters, Foundries & Dye Casting
Textile & Carpet
Water and Sewage Treatment
Utility
Paints, Inks & Coatings
Pharmaceutical Industry

THE PRICE PUMP SAFETY SUPPLEMENT

ALWAYS FIRST READ THIS MANUAL BEFORE INSTALLATION, START-UP OR MAINTENANCE.

This safety manual applies to all PRICE pumps and comprises instructions for safe installation, use and maintenance of your pump.

In this manual you may be warned for remaining hazards. This kind of information is preceded by the following label.

— Hazards or unsafe practices which could result in severe personal injury, death or in substantial product or property damage.

Verify pump model received against purchase order or spec sheet.

Retorque all bolts to specifications on torque table. Remove shipping plugs.

Pumps that need to be submersed must have both wetted and non-wetted parts compatible with material being pumped.

Submersed pumps must have a hose attached to pump's air exhaust and the exhaust air piped above liquid level. Pumps should be thoroughly flushed with water before installation.

Blow out air line for 10 to 20 seconds before attaching to pump to make sure all pipe line debris is clear.

Always wear safety glasses when operating pump. If diaphragm rupture occurs, material being pumped may be forced out air exhaust.

All suction and discharge piping/hoses should be designed to withstand the pressure and temperature of the specific application.

Do not exceed 0.7 bar (100 psi) liquid inlet pressure to pump port; this creates potential for premature wear and parts failure.

Do not exceed 7.0 bar (100 psi) air supply pressure.

A pressure relief valve set at 100 Psi shuld be made use of to avoid excess air inlet pressure.

Due to the reciprocating action of the pump, lateral instabilities can occur during normal operation, thus footed pumps should be bolted to structural steelwork/concrete. Ensure the operating surface is level and flat.

Most PRICE pumps can be used in submersible applications only when both wetted and non-wetted portions are com patible with the material being pumped. If the pump is to be used in a submersible application, a hose should be attached to the pump's air exhaust and the exhaust air piped above the liquid level.

Each PRICE pump has a particular maximum solids capability. Whenever the possibility exists that larger solid objects may be sucked into the pump, a strainer should be used on the suction line to prevent damage to the pump and subsequent risk to the operator.

VENTILATION

Ensure proper ventilation of tanks/vessels that house liquid supply. Due to a pump's high vacuum ability, improper ventilation of these supply tanks can lead to implosion of tanks when fluid is completely evacuated.

ELECTRICAL HAZARDS

Take action to prevent static sparking. Fire or explosion can result, especially when handling flammable liquids. The pump, piping valves, containers or other miscellaneous equipment must be grounded.

TEMPERATURE HAZARDS

Material being pumped should be compatible with pump's materials of construction and stated temperature limits as stated in PRICE Chemical Resistance Guide.

HAZARDS GENERATED BY NOISE

Pump noise can exceed 75 dba under certain operating conditions, e.g. high air pressure supply and little or no discharge head. Extended periods of operation under such conditions can create a hazard to operators working in proximity of the pumps. Use proper hearing protection devices.

HAZARDOUS MATERIALS

a. Maintenance instructions manual must be followed to avoid diaphragm failure.
b. NOTICE: All fasteners should be checked to match the pump's given torque specifications.

CHEMICAL COMPATIBILITY

a. When specifying a pump for a particular application, pump wetted materials of construction and elastomer materials must be compatible with the process fluid. Please consult PRICE Chemical Resistance Guide or your local authorized PRICE distributor for more information.
b. Explosive reaction: Some materials such as halogenated hydrocarbon solvents should not be pumped with an aluminum construction pump due to a possible explosive reaction.
c. Certain materials' chemical compatibility with a particular pump construction, in particular plastic wetted parts, can change as material concentration and temperature vary. Please consult your local authorized PRICE distributor for more information.

OPERATION

Ensure all operators are properly trained and employ safe operating and maintenance practices as outlined in this Safety Manual, the Pump User's Guide and Manual. In addition, all proper safety eyewear and ear protection should be used when necessary.

THERMAL EXPANSION

Some liquids present in piping may expand at elevated temperatures, resulting in pipe and/or pump damage and subsequent risk to operator.

ULTRAVIOLET HAZARDS

When the pump is subjected to sunlight (strong ultraviolet radiations) for a long period of time, the outer plastic components of the pump tend to become brittle in nature. This would reduce the pump's damage resistance.

Polypropylene: 0°C to 79°C (32°F to 175°F)
PVDF: –12°C to 107°C (10°F to 225°F)
Neoprene: –17.8°C to 93.3°C (0°F to 200°F)
Buna-N: –12.2°C to 82.2°C (10°F to 180°F)
Viton®: –40°C to 176.7°C (–40°F to 350°F)
Teflon® PTFE: 4.4°C to 104.4°C (40°F to 220°F)

THE PRICE PUMP
SUGGESTED INSTALLATION & MAINTENANCE

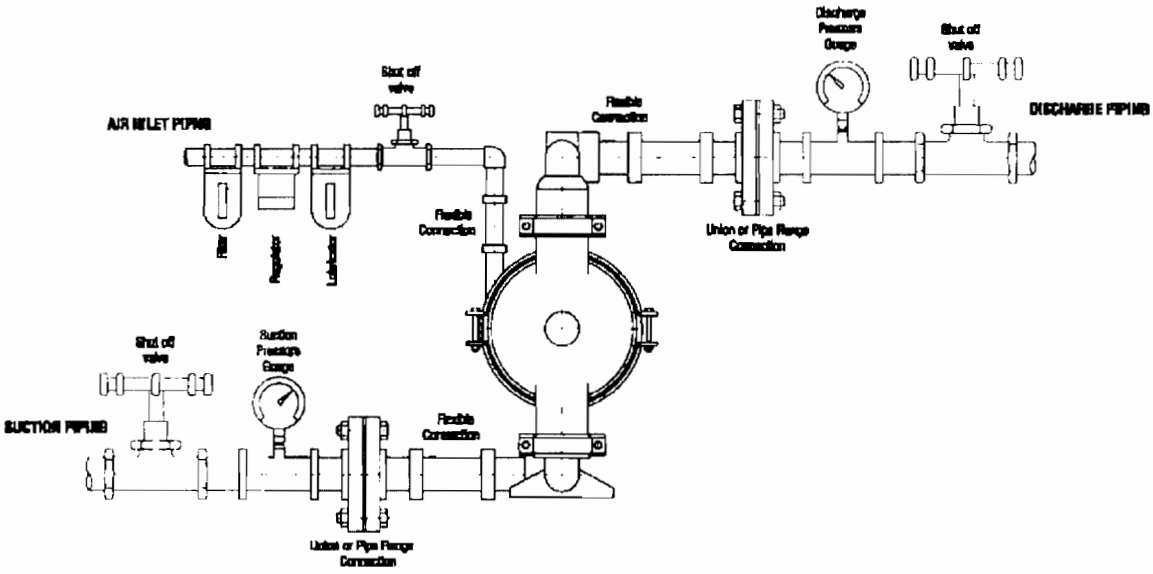

Cautions

Verify pump model received against purchase order or spec sheet.

Re-torque all bolts to specifications on torque table.

Remove shipping plugs.

Pumps that need to be submersed must have both wetted and non-wetted parts compatible with material being pumped.

Submersed pumps must have a hose attached to pump's air exhaust and the exhaust air piped above liquid level.

Pumps should be thoroughly flushed with water before installation.

Do not exceed 7 bar (105 psi) air supply pressure.

Blow out air line for 10 to 20 seconds before attaching to pump to make sure all pipe line debris is clear.

The suction pipe should be at least the diameter of the pump's inlet manifold connection or larger if highly viscous material is being pumped. The suction hose must be noncollapsible, reinforced type as PRICE pumps are capable of pulling a high vacuum. Discharge piping should be at least the diameter of the pump's discharge manifold connection; larger piping can be used to reduce friction losses. It is critical that all fittings and connections are airtight or a reduction or loss of pump suction capability will result. The pump should not be used as a support mechanism for the piping system.PRICE suggests the use of flexible connections for inlet/outlet ports and air line (see diagrams). Due to the reciprocating action of the pump, lateral instabilities can occur during normal operation, thus footed pumps should be bolted to the ground and pads should be used. Ensure the operating surface is level and flat. Most PRICE pumps can be used in submersible applications only when both wetted and non-wetted portions are compatible with the material being pumped. If the pump is to be used in a submersible application, a hose should be attached to the pump's air exhaust and the exhaust air piped above the liquid level.

Pump discharge rate can be controlled by limiting the volume and/or pressure of the air supply to the pump (preferred method). An air regulator is used to regulate air pressure. A needle valve is used to regulate volume. Pump discharge rate can also be controlled by throttling the pump discharge by partially closing a valve in the discharge line of the pump. This action increases friction loss which reduces flow rate. This is useful when the need exists to control the pump from a remote location. When the pump discharge pressure equals or exceeds the air supply pressure, the pump will stop; no bypass or pressure relief valve is needed, and pump damage will not occur. The pump has reached a "deadhead" situation and can be restarted by reducing the fluid discharge pressure or increasing the air inlet pressure. The PRICE pump runs solely on compressed air and does not generate heat, therefore your process fluid temperature will not be affected.

: When service is required, a record should be made of all necessary repairs and replacements. Over a period of time, such records can become a valuable tool for predicting and preventing future maintenance problems and unscheduled downtime. In addition, accurate records make it possible to identify pumps that are poorly suited to their applications.

Since each application is unique, maintenance schedules may be different for every pump. Frequency of use, line pressure, viscosity and abrasiveness of process fluid all affect the parts life of a PRICE pump. Periodic inspections have been found to offer the best means for preventing unscheduled pump downtime. Personnel familiar with the pump's construction and service should be informed of any abnormalities that are detected during operation. If the pump is to be used in a self-priming application, be sure that all connections are

airtight and that the suction lift is within the pump's ability. Note: Materials of construction and elastomer material have an effect on suction lift parameters. Pumps in service with a positive suction head are most efficient when inlet pressure is limited to 0.5–0.7 bar (7–10psig). Premature diaphragm failure may occur if positive suction head is 0.8 bar (11 psig) and higher, particularly when using Teflon® and Thermoplastic diaphragms. All positive suction head applications should include a "check valve" at the pump liquid inlet to allow for the pump to be disconnected. Each PRICE pump has a specific maximum solids capability. Whenever the possibility exists that larger solid objects may be sucked into the pump, a strainer should be used on the suction line.

Before any maintenance or repair is attempted, the compressed air line to the pump should be disconnected and all air pressure allowed to bleed from the pump.

Disconnect all intake, discharge, and air lines. Drain the pump by turning it upside down and allowing any fluid to flow into a suitable container. Wear safety glasses. When diaphragm failure occurs, material being pumped may be forced out the air exhaust.

Before starting disassembly, mark a line from each liquid chamber to its corresponding air chamber. This line will assist in proper alignment during reassembly.

Wear safety glasses
Shut off main air supply
Disconnect air hose from air valve to drain air pressure in hose
Isolate pump using isolation valves to avoid product spillage from pipe
Turn pump upside down to drain all liquid trapped by valve balls
Mark a line from each liquid chamber to its corresponding air chamber to assist in proper alignment during reassembly

Air Valve Piston/Spool and Casing
Ensure piston/spool can move freely
Clean out debris

Diaphragms
Make sure no swelling, cracking, or other damage is apparent

Balls/Seats/O-rings
Make sure no swelling, cracking, or other damage
is apparent
Lubricate shaft if needed

A Preventative Maintenance Schedule (PMS) should be set up for the following parts to ensure pump is serviced prior to part wear
Diaphragms
Valve Seats
Valve Balls
O-rings

Proper seal installation is critical to pump performance when employing AODDPs in your application. Great care must be taken to ensure that seals are placed in the proper grooves and not damaged during installation. Incorrect seal location will render the pump inoperable. Damaged seals may cause decreased performance and shorter seal life.

TROUBLESHOOTING GUIDE

SYMPTOMS	POTENTIAL CAUSES
PUMP CYCLES ONCE AND STOPS	1. Incorrect o-ring Placement 2. Deadhead (system pressure meets or exceeds air supply pressure) 3. Air valve or center block gaskets installed incorrectly
PUMP WILL NOT OPERATE (STALL OR DEADHEAD)	1. Wrongly fitted piston block 2. lack of air (line size, PSI, CFM) 3. Centering of spool 4. Worn o-ring 5. Air porting in center block is plugged 6. Wrong type of lubrication (attack-on-rings) over lubrication 7. Debris in air valve 8. Clogged manifolds 9. Incorrect o-ring placement 10. Deadhead (system pressure meets or exceeds air supply pressure) 11. Closed discharge valve
PUMP CYCLES AND WILL NOT PRIME OR LOW FLOW	1. Cavitation on suction side 2. Valve ball(s) not sealing properly or sticking 3. Valve ball(s) missing (pushed into pump/thermal expansion or missing) 4. Valve ball (s) /seat(s) damaged or attacked by product (swelling, shrinking, etc) 5. Vapor pressure 6. Clogged suction line
PUMP RUNNING SLUGGISH/STALLING	1. Over lubrication/under lubrication 2. Wrong type of lubrication 3. Icing 4. Clogged manifolds 5. Deadhead (system pressure meets or exceeds air supply pressure) 6. Cavitation on suction side 7. Lack of air (line size, PSI, CFM) 8. Worn o-rings 9. Vapor pressure 10. Incorrect pump size
PRODUCT LEAKING THROUGH EXHAUST OR AROUND CLAMP BANDS	1. Diaphragm failure-product leaking out exhaust 2. Diaphragm plate loose - product leaking out exhaust 3. Clamp bands loose-product leaking out clamp bands 4. Clamp bands stretched - product leaking out clamp bands 5. Teflon gasket tape ruined 6. Excessive positive suction pressure – product leaking around many or all clamp bands 7. Diaphragms stretched around center hole or bolt holes 8. Clamp bands not seated properly 9. Excessive air supply pressure
PREMATURE DIAPHRAGM FAILURE	1. Cavitation 2. Excessive flooded suction pressure 3. Misapplication (Chemical /Physical Incompatibility) 4. Wrong type of lubrication (attack on air side) 5. Incorrect diaphragm plates 6. Incorrect shaft with corresponding elastomer 7. Start up at full air pressure 8. Excessive dry running at high air pressure
BREAKING AND BENDING SHAFTS	1. Build up of solids in water chamber 2. Loose diaphragm plates

RECOMMENDATIONS

1. Reinstall o-rings in correct position
2. Reinstall inner diaphragm plate correctly
3. Check system for pressure ratio to pump
4. Install gaskets with holes properly aligned with parts or valve and center block

1. Check suction condition (move pump closer to product)
2. Clean out around valve ball cage and valve seat area
- Replace valve ball and valve seat if worn or damaged
- Check Chemical Resistance Chart for compatibility and proper elastomer match
- Use heavier valve ball material

3. Worn valve ball or valve seat (replace)
- Thermal expansion in discharge pipe (add one way valve into piping)
- Worn fingers in valve ball cage (replace part)

4. Check Chemical Resistance Chart for compatibility and proper elastomer match
5. Consult factory for evaluation and recommendation.
6. Clean suction manifold or piping
- Install screen or bag filter

1. Replace diaphragms (and back up diaphragm when using Teflon)
1,2. clean out entire center section of pump
2. Check diaphragms for damage and retighten diaphragm plates
3. Tighten clamp bands (check for stretching)
4. Replace clamp bands (apply grease to inside of clamp band to assist complete compression)
5. Replace Teflon gasket tape with Teflon diaphragms
6. Check excessive positive suction pressure
- Move pump closer to product
- Add accumulation tank or pulsation dampener as close to the pump as possible on suction side of pump
- Raise pump/place pump on top of tank to reduce inlet pressure
- Install flex hose on inlet and discharge as recommended installation

7. Check for excessive inlet pressure or air pressure
- Tighten bolts to recommended torque (See assembly/ disassembly instructions page)

8. Seat clamp bands with mallet
9. Check operating manual for recommendations

1. Flush pump
- Start pump slow

3. Double check tightness of diaphragm plates when installing replacement diaphragms

1. Set lubricator on lowest possible setting.
- Clean out center section

2. Check:
- Air line size and length
- Compressor capacity (HP vs. cfm required)
- Other usage of air in plant
- Air requirement by pump (pump capacity, product viscosity and specific gravity)

3. Disconnect and reconnect air
4. Replace o-rings
5. Clean porting in center block to allow proper air flow
6. Check compatibility of O-rings with lubrication (see operating manual)
7. Clean air valve/filter
- Check for scoring on spool and sleeve

8. Clean suction or discharge manifolds/piping
- Clean filter bags or screens

9. Reinstall o-rings in correct position (see operating manual for assistance)
10. Increase air supply pressure
11. Open discharge valve

1. Set lubricator on lowest possible setting
1,2. Clean out entire center section of pump
2. lubrication recommended
4. Clean manifolds to allow proper air flow
5. Check system to locate deadhead (equilibrium)
- Increase air supply pressure

6. Check suction condition (move pump closer to product
7. Check:
- Air line size length
- Compressor capacity (HP vs cfm required)
- Other usage of air in plants
- Air requirement by pump (pump capacity, product viscosity and specific gravity)

8. Replace o-rings
9,10. consult factory for evaluation and recommendation

1. Enlarge pipe diameter on suction side of pump
1,2. Move pump closer to product
- Raise pump/place pump on top of tank to reduce inlet pressure

3. Add accumulation tank or pulsation dampener as close to the pump as possible
- Start pump slowly (add smart start)

3, 4. Consult Chemical Resistance Chart for compatibility with products, cleaners, temperature limitations and lubrication
5. Check for correct part
6. Check for correct installation
8. Start up pump slowly
9. Install control or automatic shutoff

THE PRICE PUMP
PUMP & ELASTOMER OPTIONS

AVAILABLE MATERIALS OF CONSTRUCTION - PUMPS					
PUMP MODEL NO.					
Polypropylene (PP)	✓	✓	✓	✓	✓
Polyvinylidene Fluoride (PVDF)	✓	✓	✓	✓	
Stainless Steel (SS)	✓	✓	✓	✓	✓
Aluminium (AL)		✓	✓	✓	✓
Cast Iron (CI)		✓	✓	✓	✓

AVAILABLE MATERIALS OF CONSTRUCTION - ELASTOMERS				
ELASTOMER OPTIONS				
Neoprene	✓	✓	✓	✓
Viton				✓
Nitrile (Buna-N)	✓	✓	✓	✓
Butyl	✓	✓	✓	
Teflon Ptfe	✓	✓		
Santoprene	✓			
Hypalon	✓	✓	✓	✓
Epdm (Nordel)	✓	✓	✓	
Polypropylene (PP)			✓	
Stainless Steel (SS)		✓	✓	
Aluminium (AL)			✓	
Polyvinylidene Fluoride (PVDF)			✓	
Cast Iron (CI)			✓	

Only Teflon ball valves available for our model # AOD 15

TEMPERATURE LIMITS	
Polypropylene	0°C to 79°C (32°F to 175°F)
PVDF	−12°C to 107°C (10°F to 225°F)
Neoprene	−17.8°C to 93.3°C (0°F to 200°F)
Buna-N	−12.2°C to 82.2°C (10°F to 180°F)
Viton®	−40°C to 176.7°C (−40°F to 350°F)
Teflon® PTFE	4.4°C to 104.4°C (40°F to 220°F)

WETTED MATERIAL COMATIBILITY		
FLUID SOLUTIONS	NUMERIC pH LEVEL	WETTED PART MATERIAL
Alkaline	14	
	13	Stainless Steel
Caustic	12	
	11	
Basic	10	Cast Iron
	9	
Neutral	8	
	7	Aluminium
	6	
	5	
	4	Stainless Steel
Acid	3	
	2	PP / PVDF
	1	
	0	

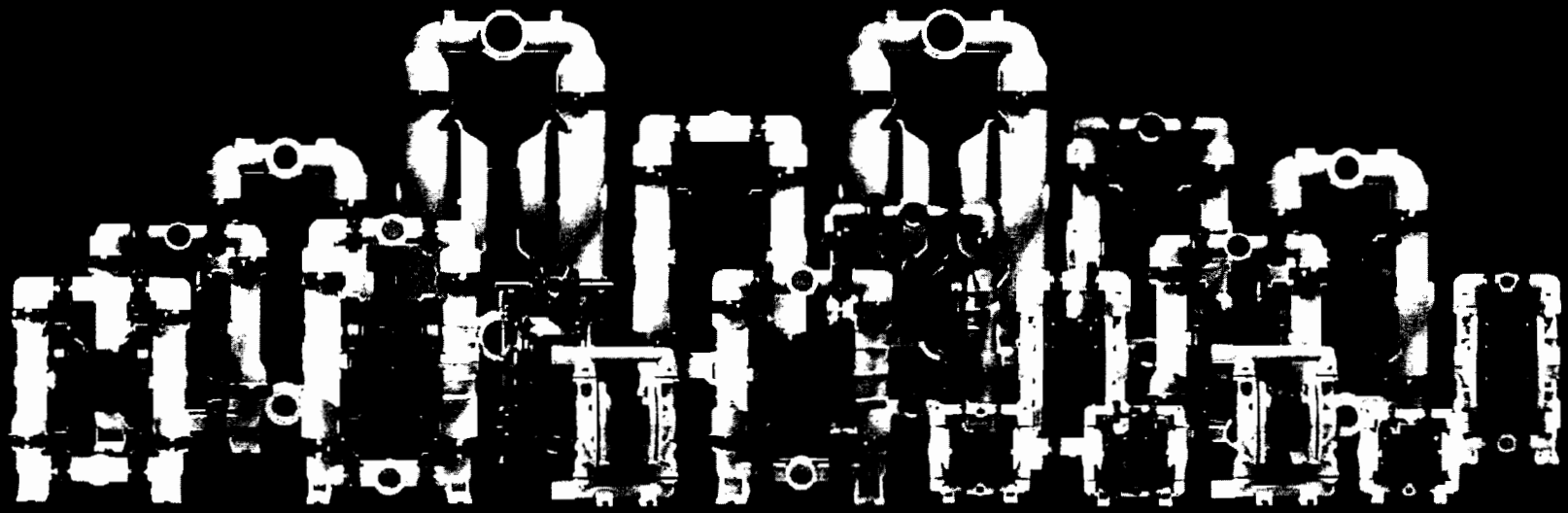

PRICE PUMPS PVT. LTD.
Air Operated Double Diaphragm Pumps
Office Behind Service Industrial Estate, Gr Floor
Sant Gyaneshwar Road, Shivaji Park
Mumbai 400028, India

t +91 22 2444 0582 +91 22 2444 0592
f +91 22 2444 0588
e office@pricepumps.co.in
w www.pricepumps.co.in

Air operated diaphragm pump

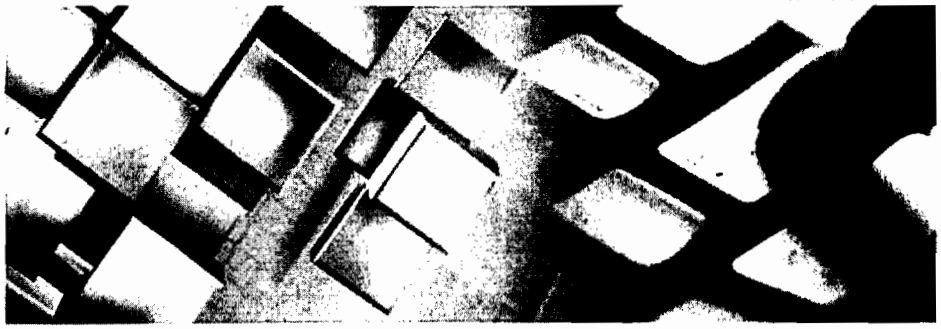

About us

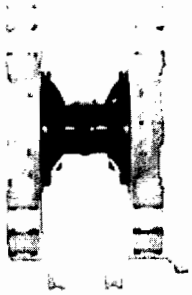

1 2 3 4

Rudi pump is a professional manufacturer of air operated diaphragm pump. Our RW series air operated diaphragm pumps adopt three-way air pilot valve for true no-sticking and lube-free operation. The structure and performance is similar with some world famous brand.

RW series air operated diaphragm pumps use compressed air as the power source. It can convey corrosive, volatile, flammable, poisonous liquid or fluids with particles and high viscosity liquid etc. The wetted parts and diaphragm can be choose according to different fluid media.
Pump material:
Wetted parts: PP, PVDF, Acetal, Aluminum alloy, Cast iron, SS304 / 316 etc.
Diaphragm: Teflon, Santoprene, Viton, EPDM, Hytrel, Buna-N, Neoprene etc.

If you are interested in any pump of our company, please feel free to contact us for further details or any questions you may have. We warmly welcome your inquiries. We always keep improving of our pump quality and service, in order to establish long-term relationship with our customers.

Copyright© Shanghai Rudi Pump Co.,Ltd
Add 1428 Jinqian Road, Jinhui Town, Shanghai, China.

Air operated diaphragm pump

SHANGHAI RUDI PUMP CO.,LTD

Add: 1428 Jinqian Road, Jinhui Town, Shanghai, China.

Tel: +86 21 51875070

Fax: +86 21 51685822

Email:sales@river-wave.cn, rudipumps@gmail.com

Msn:rudipump@hotmail.com

Copyright© Shanghai Rudi Pump Co.,Ltd
Add: 1428 Jinqian Road, Jinhui Town, Shanghai, China.

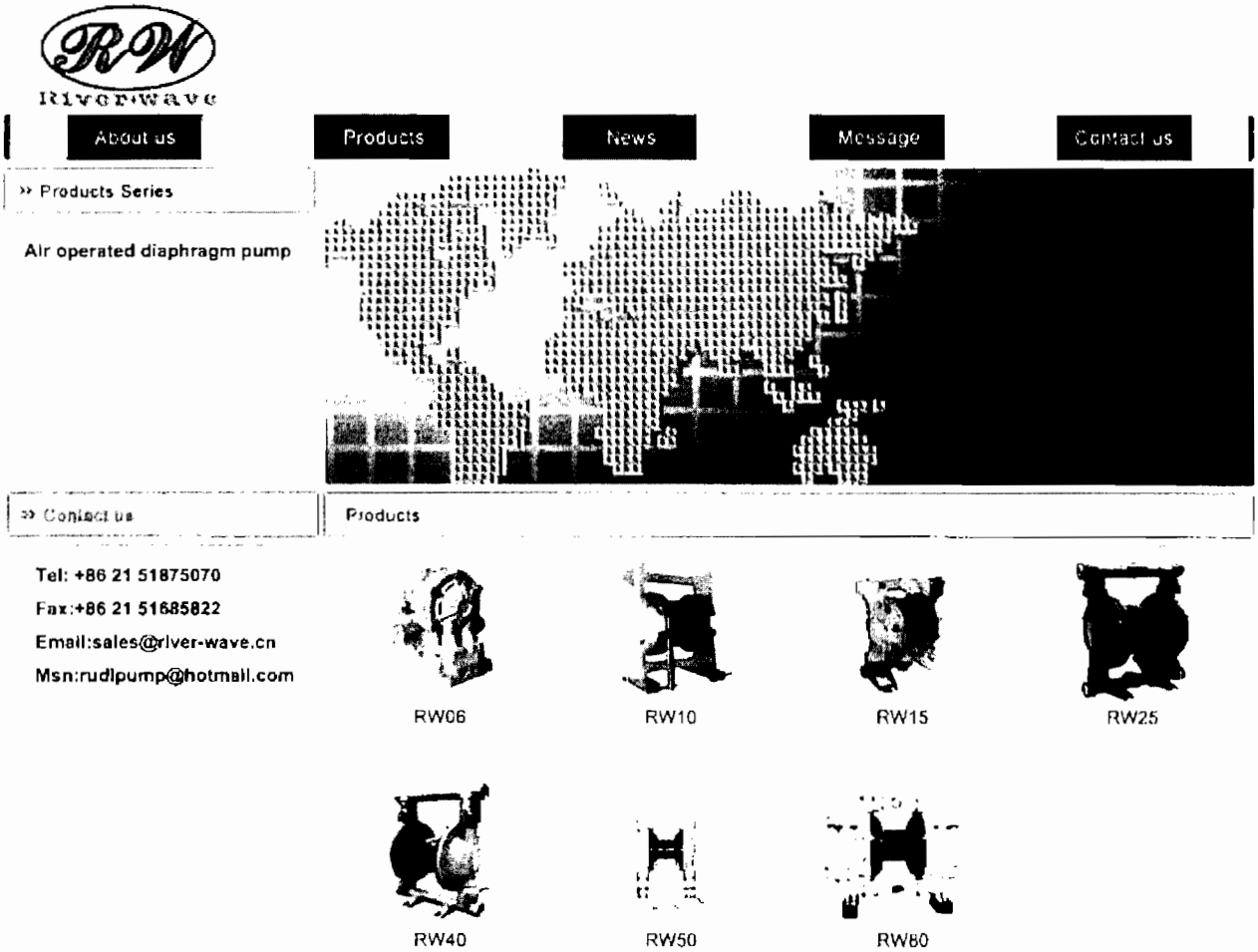
RW
River-wave
About us
Products
News
Message
Contact us
» Products Series
Air operated diaphragm pump
» Contact us
Products
Tel: +86 21 51875070
Fax:+86 21 51685822
Email:sales@river-wave.cn
Msn:rudipump@hotmail.com
RW06
RW10
RW15
RW25
RW40
RW50
RW80
About us | News | Products | Message | Contact us
Copyright© Shanghai Rudi Pump Co.,Ltd
Add : 1428 Jinqian Road, Jinhui Town, Shanghai, China.

Air operated diaphragm pump

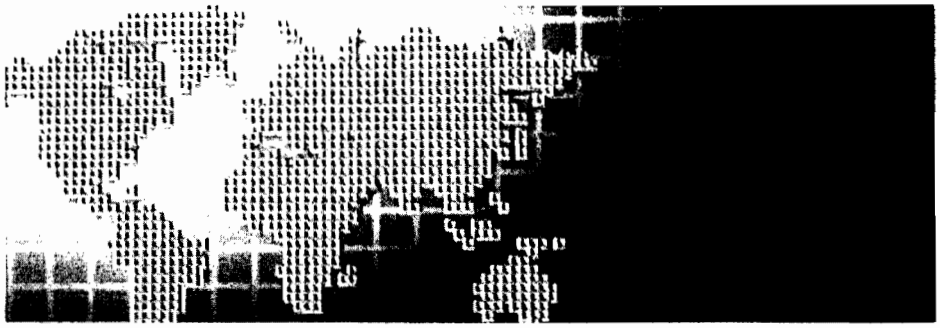

Tel: +86 21 51875070
Fax:+86 21 51685822
Email:sales@river-wave.cn
Msn:rudipump@hotmail.com

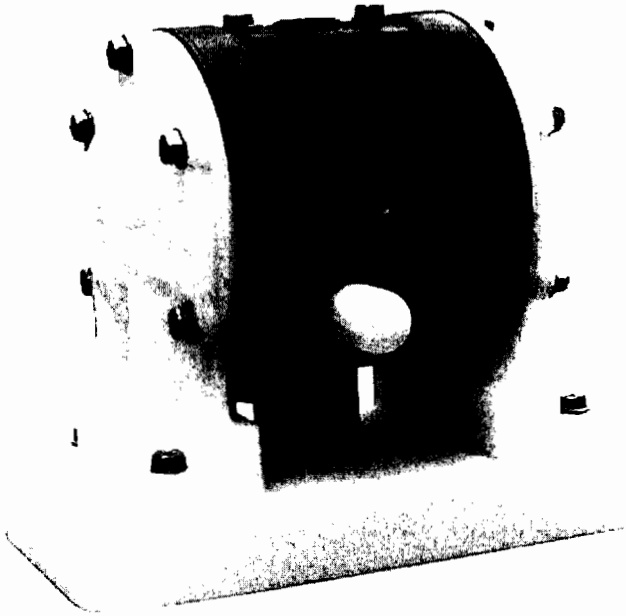

Series Air operated diaphragm pump
Name : RW06
Model : RW06
Click : 875

RW Series Air operated double diaphragm pump adopt three-way air pilot valve for true no-sticking and lube-free operation.

Pump Material:

Wetted parts: cast iron, aluminum alloy, stainless steel 304 or 316l, PP, PVDF etc.

Diaphragm: NBR, Viton, Neoprene, Teflon, EPDM, Santoprene, Hytrel etc.

Air operated pump using compressed air as the power source. It can convey corrosive, volatile, flammable, poisonous liquid or fluids with particles and high viscosity liquid etc.

【 Window Close 】

Copyright© Shanghai Rudi Pump Co.,Ltd
Add : 1428 Jinqian Road, Jinhui Town, Shanghai, China.

Air operated diaphragm pump

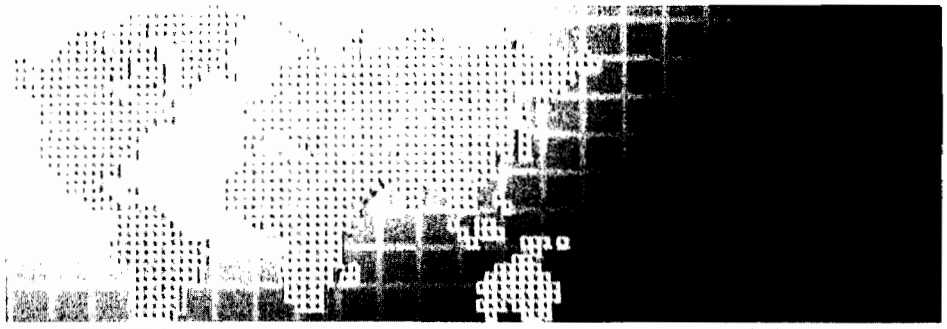

Tel: +86 21 51875070
Fax:+86 21 51685822
Email:sales@river-wave.cn
Msn:rudipump@hotmail.com

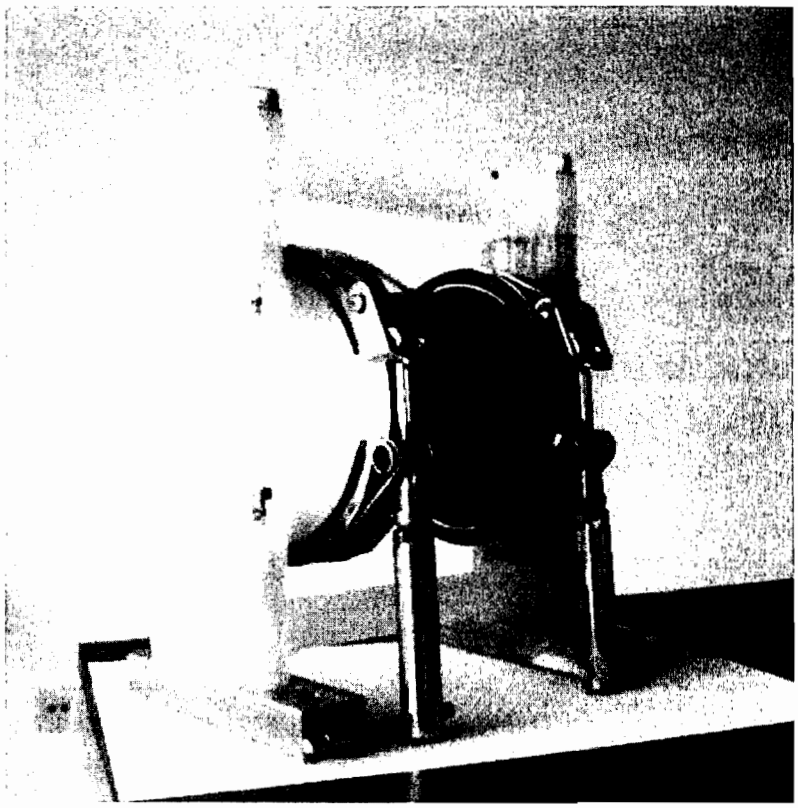

Series : Air operated diaphragm pump

Name : RW10

Model : RW10

Click : 589

RW Series Air operated double diaphragm pump adopt three-way air pilot valve for true no-sticking and lube-free operation.

Pump Material:

Wetted parts: cast iron, aluminum alloy, stainless steel 304 or 316l, PP, PVDF etc.

Diaphragm: NBR, Viton, Neoprene, Teflon, EPDM, Santoprene, Hytrel etc.

Air operated pump using compressed air as the power source. It can convey corrosive, volatile, flammable, poisonous liquid or fluids with particles and high viscosity liquid etc.

【 Window Close 】

Copyright© Shanghai Rudi Pump Co.,Ltd
Add: 1428 Jinqian Road, Jinhui Town, Shanghai, China.

Air operated diaphragm pump

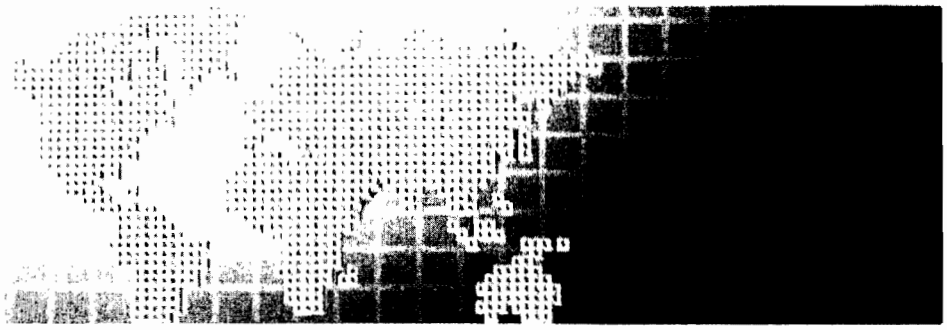

About us

Tel: +86 21 51875070
Fax:+86 21 51685822
Email:sales@river-wave.cn
Msn:rudipump@hotmail.com

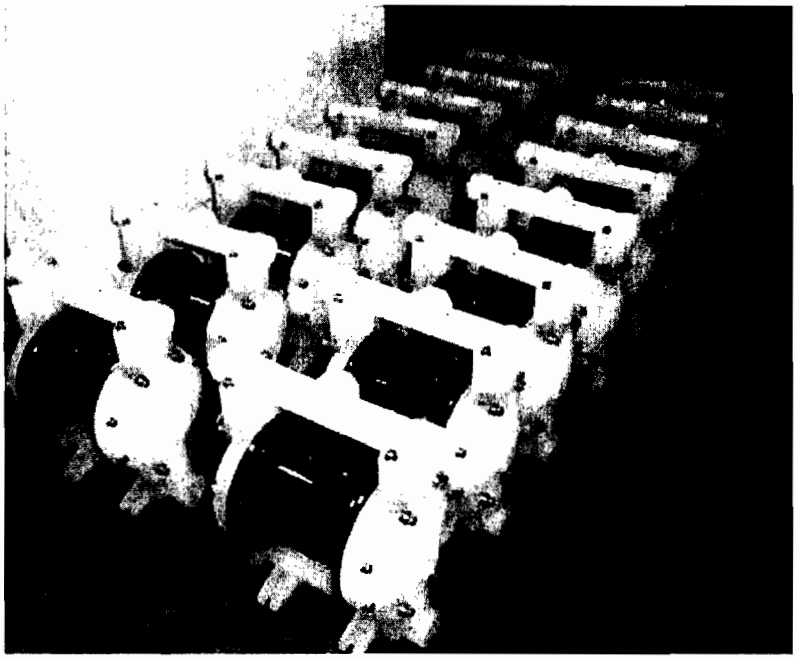

Series : Air operated diaphragm pump
Name : RW25
Model : RW25
Click : 669

RW Series Air operated double diaphragm pump adopt three-way air pilot valve for true no-sticking and lube-free operation.

Pump Material:

Wetted parts: cast iron, aluminum alloy, stainless steel 304 or 316l, PP, PVDF etc.

Diaphragm: NBR, Viton, Neoprene, Teflon, EPDM, Santoprene, Hytrel etc.

Air operated pump using compressed air as the power source. It can convey corrosive, volatile, flammable, poisonous liquid or fluids with particles and high viscosity liquid etc.

【 Window Close 】

Copyright© Shanghai Rudi Pump Co.,Ltd
Add: 1428 Jinqian Road, Jinhui Town, Shanghai, China.

Air operated diaphragm pump

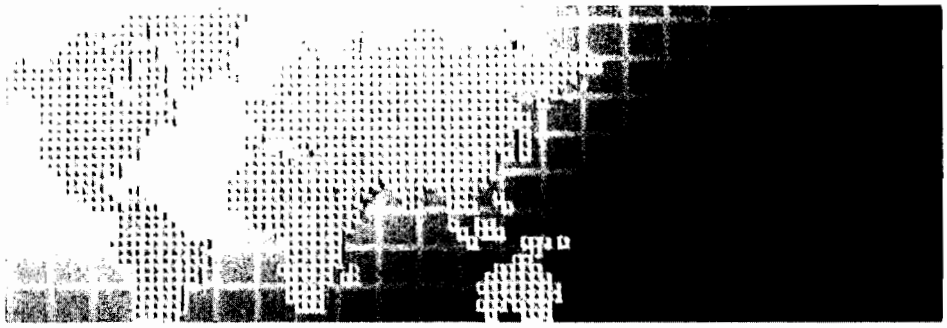

About us

Tel: +86 21 51875070
Fax:+86 21 51685822
Email:sales@river-wave.cn
Msn:rudipump@hotmail.com

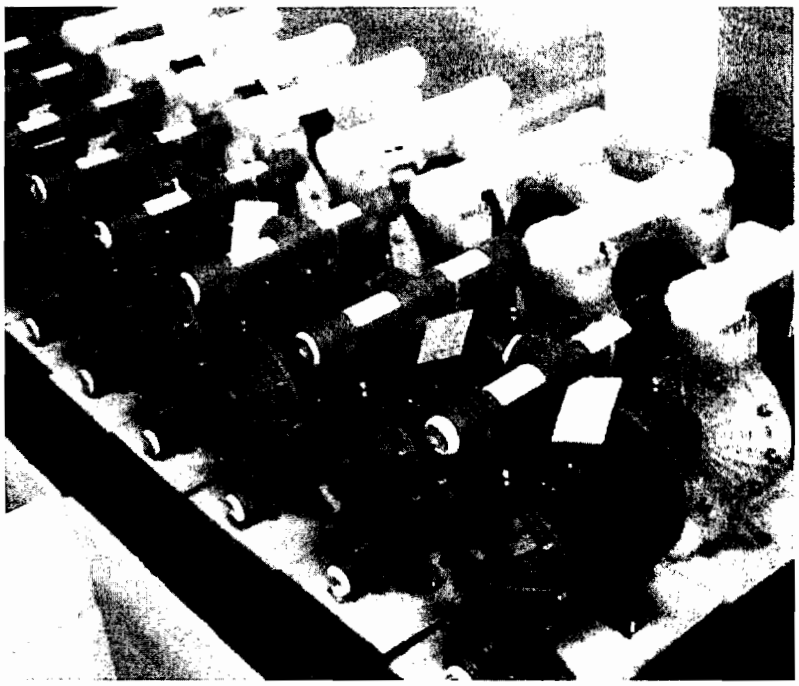

Series : Air operated diaphragm pump
Name : RW40
Model : RW40
Click : 625

RW Series Air operated double diaphragm pump adopt three-way air pilot valve for true no-sticking and lube-free operation.

Pump Material:

Wetted parts: cast iron, aluminum alloy, stainless steel 304 or 316l, PP, PVDF etc.

Diaphragm: NBR, Viton, Neoprene, Teflon, EPDM, Santoprene, Hytrel etc.

Air operated pump using compressed air as the power source. It can convey corrosive, volatile, flammable, poisonous liquid or fluids with particles and high viscosity liquid etc.

【 Window Close 】

Copyright© Shanghai Rudi Pump Co.,Ltd
Add：1428 Jinqian Road, Jinhui Town, Shanghai, China.

Air operated diaphragm pump

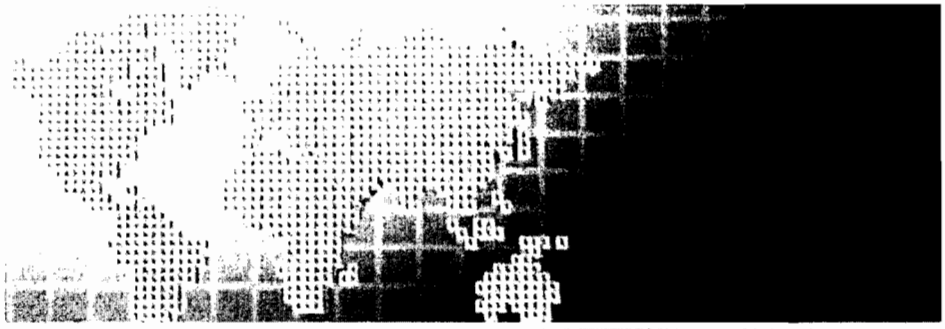

About us

Tel: +86 21 51875070
Fax:+86 21 51685822
Email:sales@river-wave.cn
Msn:rudipump@hotmail.com

Series : Air operated diaphragm pump
Name : RW50
Model : RW50
Click : 651

RW Series Air operated double diaphragm pump adopt three-way air pilot valve for true no-sticking and lube-free operation.

Pump Material:

Wetted parts: cast iron, aluminum alloy, stainless steel 304 or 316l, PP, PVDF etc.

Diaphragm: NBR, Viton, Neoprene, Teflon, EPDM, Santoprene, Hytrel etc.

Air operated pump using compressed air as the power source. It can convey corrosive, volatile, flammable, poisonous liquid or fluids with particles and high viscosity liquid etc.

【 Window Close 】

Copyright© Shanghai Rudi Pump Co.,Ltd
Add: 1428 Jinqian Road, Jinhui Town, Shanghai, China.

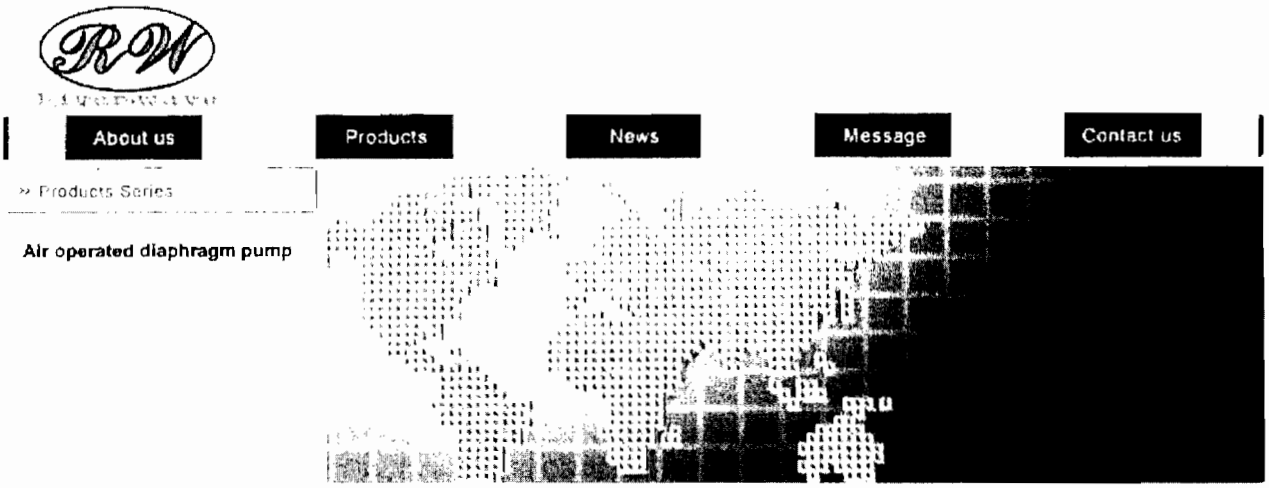
About us
Products
News
Message
Contact us
» Products Series
Air operated diaphragm pump

About us

Tel: +86 21 51876070
Fax:+86 21 51685822
Email:sales@river-wave.cn
Msn:rudipump@hotmail.com

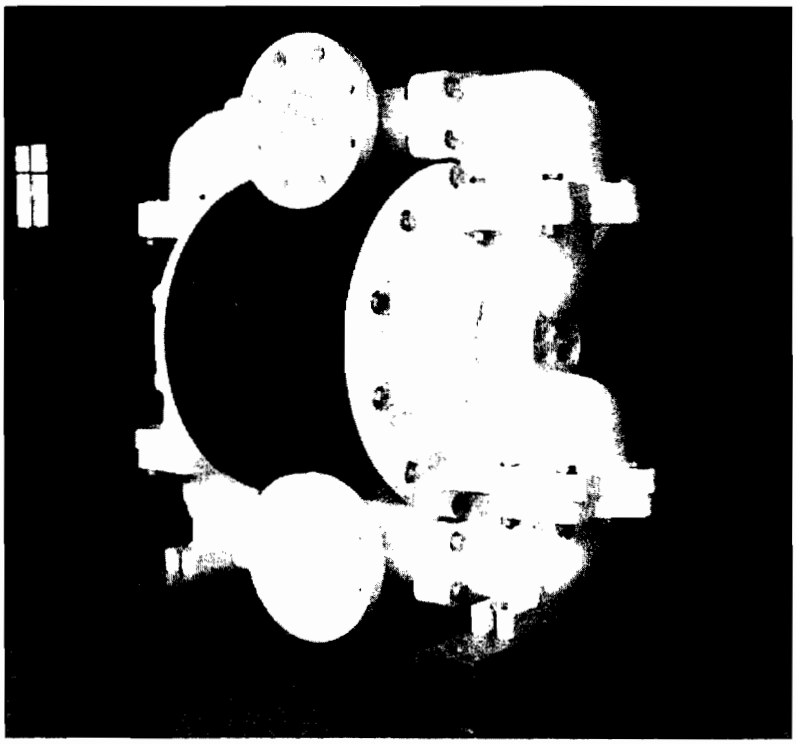

Series : Air operated diaphragm pump

Name : RW80

Model : RW80

Click : 670

RW Series Air operated double diaphragm pump adopt three-way air pilot valve for true no-sticking and lube-free operation.

Pump Material:

Wetted parts: cast iron, aluminum alloy, stainless steel 304 or 316l, PP, PVDF etc.

Diaphragm: NBR, Viton, Neoprene, Teflon, EPDM, Santoprene, Hytrel etc.

Air operated pump using compressed air as the power source. It can convey corrosive, volatile, flammable, poisonous liquid or fluids with particles and high viscosity liquid etc.

【 Window Close 】

Copyright© Shanghai Rudi Pump Co.,Ltd
Add: 1428 Jinqian Road, Jinhui Town, Shanghai, China.

Submit Query

Home

search our products

Zhejiang Xiandai Pump Co., Ltd.

A&V Checked

Add Company to Favorites

Product Showcase [34]

Products [75]

Vertical multistage pump [27]

Horizontal Multistage pump [8]

Stainless steel industrial pump [3]

Fire fighting pump [6]

Submersible Pump [7]

Company Profile

Video Intro

Agents Wanted

Quality Control

R&D

Management

Contact Person

Mr. Kevin Lin

Add to my Contacts

View Contact Details

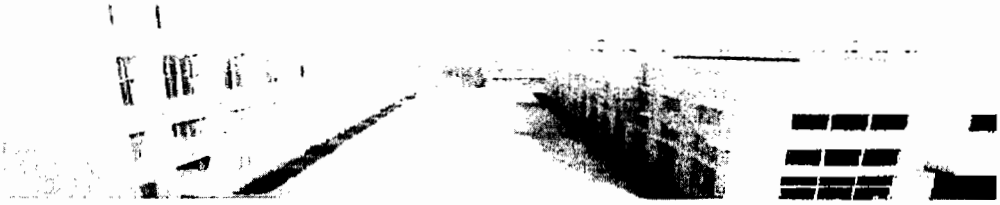

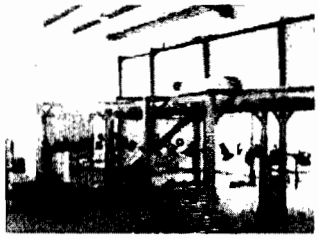

Welcome to our website Zhejiang Xiandai Pump Co , Ltd is a main manufacturer of multistage pump in China, have experience over 15 year.
1.Products: vertical multistage pump, horizontal multistage pump, diaphragm pump, submersible pump.

Video Intro

Product Showcase

Stainless steel vertical multi-stage pump

Vertical multistage high pressure pump

Stainless steel vertical multi stage pump

Stainless steel multistage vertical pump

Horizontal multi-stage pump

Stainless steel multistage industrial pump

Vertical multi-stage booster pump / boosting pump

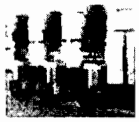

Vertical multi-stage centrifugal pump

Vertical multistage clean water pump

Vertical multi-stage water treatment pump

Vertical multistage water supply pump

Fire fighting pump

Fire pump

Vertical multistage RO pump / reverse osmosis pump

Horizontal multistage centrifugal pump

See more

Email this page
Bookmark this page
Print this page

Air operated double diaphragm pump

Pneumatic Membrane pump

Horizontal multi stage pump

Pneumatic pump

Stainless steel vertical multistage pump

Air operated diaphragm pump

Submersible Pump

Deep Well Submersible Pump

Stainless steel horizontal multistage pump

Horizontal multistage pump / Horizontal pump

Multistage pump / multi-stage pump / multi stage pump

multistage pump / multi-stage pump / multi stage pump

Diaphragm pump / bombas

chemical pump

Centrifugal pump / multistage centrifugal pump

New Products

Stainless steel vertical multistage pump

Deep Well Submersible Pump

Industrial Washing Pump

Industrial Clean in Water Pump

Water Treatment Pump

Clean Water Pump

Stainless Steel Pump

Stainless Steel Pump

Stainless Steel Pump

Stainless Steel Pump

Company Profile

Basic Information

Company Name:	Zhejiang Xiandai Pump Co., Ltd. ◆◆
Business Type:	Manufacturer
Product/Service (We Sell):	Pump,multistage pump,vertical pump,diaphragm pump,high pressure pump,fire fighting pump,water pump,horizontal pump,stainless steel pump,Industrial pump
Brands:	Xiandai
Number of Employees:	101 - 500 People

Company Information - Site Map - Partnerships
Buy - Sell - My Alibaba - Community - Trade Shows - Safety & Security - Help - Contact Us

Browse by: Manufacturers - Wholesalers - China Gold Suppliers - All Products - Countries - Importers - Buying Leads - China - UK - Australia
Alibaba Group: **Alibaba.com:** Alibaba China - Alibaba International - AliExpress - Alibaba Japan | Taobao | Alipay | Yahoo! China | Koubei.com | Alisoft
Product Listing Policy - Intellectual Property Policy and Infringement Claims - Privacy Policy - Terms of Use
Copyright Notice **© 1999-2011 Alibaba.com Hong Kong Limited and licensors. All rights reserved.**
Join the Alibaba.com Research Panel

Trade & Market

Main Markets:	North America South America Eastern Europe Southeast Asia Africa Mid East Western Europe

Factory Information

Factory Size (Sq.meters):	10,000-30,000 square meters
Factory Location:	West Wuxing Road, Dong'ou Industrial Zone, Oubei Town, Yongjia County, Wenzhou City, Zhejiang Province, China
QA/QC:	In House
Number of R&D Staff:	5 - 10 People
Number of QC Staff:	5 - 10 People
Management Certification:	ISO 9001:2000
Contract Manufacturing:	OEM Service Offered Buyer Label Offered

Send your message to this supplier

From:

To: Mr. Kevin Lin

Message:

Didn't find what you're looking for? Post an RFQ to let the Industry Specialists in Alibaba.com to match the right suppliers for you !

Join Free | My Alibaba Submit Query

Zhejiang Xiandai Pump Co., Ltd.

About Us

about us

search our products

Zhejiang Xiandai Pump Co., Ltd.

A&V Checked

Add Company to Favorites

Company Profile

Video Intro

Agents Wanted

Quality Control

R&D

Management

Contact Person

Mr. Kevin Lin

Add to my Contacts

View Contact Details

About Us

Welcome to our website, Zhejiang Xiandai Pump Co., Ltd is a main manufacturer of multistage pump in China, have experience over 15 year.

1.Products: vertical multistage pump, horizontal multistage pump, diaphragm pump, submersible pump.
2.Full range test equipment to check pump performance and quality.
3.Pump have CE certificate
4.Have exported pump to more than 30 countries.
5.Strict quality control policy for quality is life for factory.

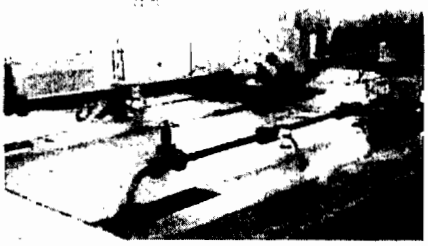

We sincerely welcome customers worldwide to establish mutually beneficial and strategic long-term business relationships. If you are interested in any of our competitively priced products, please feel free to contact us for further details or any questions you may have. We warmly welcome your inquiries.

Company Profile

Basic Information

Company Name:	Zhejiang Xiandai Pump Co., Ltd.
Business Type:	Manufacturer
Product/Service (We Sell):	Pump,multistage pump,vertical pump,diaphragm pump,high pressure pump,fire fighting pump,water pump,horizontal pump,stainless steel pump,Industrial pump
Registered Address:	Dong'ou Industrial Zone, Oubei Town, Yongjia County, Wenzhou, Zhejiang, China (Mainland) Zip: 325102
Brands:	Xiandai
Number of Employees:	101 - 500 People
Company Website URL:	http://www.xiandaipump.com

Ownership & Capital

Year Established:	2001
Legal Representative/Business Owner:	Mr. Shiyi Chen

Trade & Market

Main Markets:	North America South America Eastern Europe

Email this page
Bookmark this page
Print this page

Southeast Asia
Africa
Mid East
Western Europe

Factory Information

Factory Size:	10,000-30,000 square meters
Factory Location:	West Wuxing Road, Dong'ou Industrial Zone, Oubei Town, Yongjia County, Wenzhou City, Zhejiang Province, China
QA/QC:	In House
No. of R&D Staff:	5 - 10 People
No. of QC Staff:	5 - 10 People
Management Certification:	ISO 9001:2000
Contract Manufacturing:	OEM Service Offered Buyer Label Offered

Send your message to this supplier

From:

To: Mr. Kevin Lin

Message:

Didn't find what you're looking for? Post an RFQ to let the Industry Specialists in Alibaba.com to match the right suppliers for you !

Company Information - Site Map - Partnerships
Buy - Sell - My Alibaba - Community - Trade Shows - Safety & Security - Help - Contact Us

Browse by: Manufacturers - Wholesalers - China Gold Suppliers - All Products - Countries - Importers - Buying Leads - China - UK - Australia
Alibaba Group: **Alibaba.com:** American China - Alibaba International - AliExpress - Alibaba Cloud | Taobao | Alipay | Yahoo! China | Koubei.com - Alisoft
Product Listing Policy - Intellectual Property Policy and Infringement Claims - Privacy Policy - Terms of Use
Copyright Notice **© 1999-2011 Alibaba.com Hong Kong Limited and licensors. All rights reserved.**
Join the Alibaba.com Research Panel

You are not registered with TradeKey.com. Please click here to register.

Sign In Join Free Help Inquiry Basket Language

Home Sell Offers Buy Offers Products Companies Member Area

5 0 7 1 9 6 3 $ Billions Saved & Counting

Ads by Google China Company China Enterprises Zhejiang Door Shanghai Jepson & Co LTD

Search: Show All Companies Country/Region Sort by TrustPoints Advanced Search

VIAGRA ® Get VIAGRA (sildenafil citrate) Prescribing Info at PfizerPro.com www.PfizerPro.com/Viagra

Apex Well Pump For Professional Well Pump And Water Well Repairs Call Us Today. JcCoatsPlumbingAndRepair.com

ViagraOnline From $0.77 5% Discount + Gift Free Shipping. US Trusted. Without Prescription! Ameritrust5.yolasite.com

Ads by Google

Zhejiang Xiandai Pump Co.,Ltd.

Member Since Aug 20th

[China]

Free Member

Rate this company | Check Member Credibility

Contact Now

Send Email

Company Profile

Product Catalog (5)

Sell Offers (5)

Contact Details

TrustProfile (0 Points)

Welcome to our website. ZHEJIANG XIANDAI PUMP CO., LTD is a leading manufacturer of stainless steel multistage pump and diaphragm pump in China with a history over 15 years. Our factory primarily supply vertical multistage pump, horizontal multistage pump, fire pump and air operated diaphragm pump. We have exported our pumps to more than 30 regions and countries.

Horizontal and vertical multistage pump, all parts that touch with liquid are made of stainless steel, have obtained CE certificate. Diaphragm pump is similar with GRACO pump and adopt three way air pilot valve for true no-sticking and lube-free operation. We are striving to be increasingly competitive through technical excellence, continuous improvement of our pump quality and service, so as to establish long-term relationship with our customers.

We sincerely welcome customers worldwide. And we'd like to establish mutually beneficial and long-term business relationship with customers. If you are interested in any pump in our company, please feel free to contact us for further details or any questions you may have. We warmly welcome your inquiries.

Ads by Google

Centrifugal and Mud Pumps
Frac and Water Transfer Pumps Fluitland Pumps

Heat Pump
Budget Priced Heat Pump Systems Wholesale Prices To The Public

Hines MN Water Pump Parts
Call Our Friendly Experts for Water Pumps, Pump Parts and Services!

Raleigh Well Repair
For Professional Well Pump And Water Well Repairs Call Us Today

Ads by Google

NETZSCH Mohnopumpen GmbH
Increasing Cavity and Rotary Lobe Pumps for Industry

High Vacuum Pumps
New or rebuilt by Edwards and Leybold factory trained technicians

Manufacturing Guide
Need Commercial Hydraulic Pump Construction Hydraulic Pump Guide

Air Diaphragm Pumps
World Class Verderair air diaphragm pumps

Ads by Google China TV Brasil China China Gay FIM China Kids China

Product Showcase

(Category Hot Products: sump pumps water pumps small pumps wood chippers beverage pump vacuum pump hoover vacuum lawn vacuum hypro pumps hydraulic pumps gear pumps leaf shredder well pumps leaf vacuums pond pumps)

fire fighting pump

air operated diap...

Horizontal multis...

vertical multistd...

Other Information

Business Type:	**Manufacturing**
Main Markets:	**Americas** **Africa** **Asia** **East Europe** **Europe** **Middle East** **North Europe** **West Europe** **Worldwide**
Year Established:	**1990**
Number of Employees:	**100+**
Legal Representative / CEO:	
Website:	**www.xiandaipump.com**
Certificates:	**CE**

Please Sign In to view this member's contact information.
Not a TradeKey.com member yet? **Join Now**. Its Free!

Sign in Now

Sell 230/500 CAW33, 241/500CAW33, 230/560CAW33-Spherical Roller Bearing

Sell Nails, Screws, Eyebolts, Locks, Hooks

Sell Bathroom Acessory

Sell Sprocket

XY-1700Mini Furnace

Premium Suppliers

Meiling Group

Shanghai Tianquan Pump Group Co. Ltd

Shanghai Dynamic Industry Co., Ltd.

ISO 9001
ISO 27001
Certified

Privacy Policy Terms of Use
Copyright © 2011 TradeKey.com

click here

中文版 English

XIAN DAI PUMP

- Vertical multistage pump
- Horizontal multistage pump
- Fire fighting pump
- Low noise pump

MSN online chat

msn

Access messenger

Tel: +86 577 67988267
Fax: +86 577 67988282
Mail: sales@xiandaipump.com

1 CE certificate for CDL series pump

2 Passed ISO9001 quality system certification

Total 2 Items Max-perpage 9 Page 1 / 1

Tel:86-577-67988267 Fax:86-577-67988282

Copyright © Zhejiang xiandai pump Co., Ltd

Join Free My Alibaba Submit Query

Products

products Air Operated Diaphragm Pump

search our products

Air Operated Diaphragm Pump

Select to View gallery Show 32 Items per page

Zhejiang Xiandai Pump Co., Ltd.

Add Company to Favorites

Product Showcase [30]

Products [75]

Vertical multistage pump [27]

Horizontal Multistage pump [9]

Stainless steel industrial pump [3]

Fire fighting pump [6]

Submersible Pump [7]

Company Profile

Video Intro

Agents Wanted

Quality Control

R&D

Management

Contact Person

Mr. Kevin Lin

Add to my Contacts

View Contact Details

Gear pump

Oil Pump

Diaphragm pump / pump

magnetic pump, chemical diaphragm pump

Diaphragm pump

chemical process pump

Paint pump, painting pump

Slurry pump

chemical pump

Air drive pump / pneumatic drive pump

Air operated pneumatic diaphragm pump

Air powered double diaphragm pump / air power diaphragm pump

Pneumatic diaphragm pump

Air operated Acid pump

Air operated chemical pump

Air operated chemical pump

Air operated industrial pump

Air operated diaphragm pump

Email this page
Bookmark this page
Print this page

Pneumatic pump

Air operated double diaphragm pump

Pneumatic Membrane pump

Select to

Page 1 of 1 1

Didn't find what you're looking for? Post an RFQ to let the Industry Specialists in Alibaba.com to match the right suppliers for you !

Company Information Site Map - Partnerships
Buy - Sell - My Alibaba - Community - Trade Shows - Safety & Security - Help - Contact Us

Browse by: Manufacturers - Wholesalers - China Gold Suppliers - All Products - Top Markets - Importers - Sourcing Tools - China - UK - Australia
Alibaba Group: Alibaba.com: Aliyun Cloud - Aliyun International - AliExpress - Alibaba Japan | Taobao | Alipay | Yahoo! China | Koubei.com | Alisoft
Product Listing Policy - Intellectual Property Rights and Infringement Claims - Privacy Policy - Terms of Use
Copyright Notice © 1999-2011 Alibaba.com Hong Kong Limited and licensors. All rights reserved.
Join the Alibaba.com Research Panel

Join Free | My Alibaba

Search Product

Submit Query

5 year

Zhejiang Xiandai Pump Co., Ltd

Home Products TrustPass Profile About Us Contacts

Diaphragm pump

search our products

Zhejiang Xiandai Pump Co., Ltd.
[Zhejiang, China (Mainland)]

A&V Checked

Add Company to Favorites

Product Showcase (30)

Products [75]

Vertical multistage pump [27]

Horizontal Multistage pump [9]

Stainless steel industrial pump [3]

Fire fighting pump [6]

Submersible Pump [7]

Company Profile

Video Intro

Agents Wanted

Quality Control

R&D

Management

Contact Person

Mr. Kevin Lin

Add to my Contacts

View Contact Details

Diaphragm pump

Diaphragm pump

Add to My Favorites

View Product Details

Product Details

Place of Origin	China (Mainland)
Structure	Diaphragm Pump
Power	Pneumatic
Standard or Nonstandard	Standard

Payment & Shipping Terms

Price:	Get Latest Price
Minimum Order Quantity	16 Set/Sets
Packaging Details:	Carton
Payment Terms	L/C,T/T
Supply Ability	600 Set/Sets per Month

« Prev Product 1 2 3 4 ... Next Product »

Detailed Product Description

Diaphragm pump
1.Body:cast iron,aluminum,SS3,PP,PVDF
2.Diaphragm:Teflon,Viton,Hytrel etc

RW Air operated diaphragm pump
Pump Material:
1. Wetted parts: cast iron, aluminum alloy, stainless steel 304 or 316l, PP, PVDF etc.
2. Diaphragm: NBR, Viton, Neoprene, Teflon, EPDM, Santoprene, Hytrel etc

Air operated pump using compressed air as the power source. It can convey corrosive, volatile, flammable, poisonous liquid or fluids with particles and high viscosity liquid etc.

Type	RW06	RW10	RW15	RW25	RW40	RW50	RW80
Suction size[inch]	1/4"	3/8"	1/2"	1"	1 1/2"	2"	3"
Discharge size[inch]	1/4"	3/8"	1/2"	1"	1 1/2"	2"	3"
Air inlet size[inch]	1/4"	1/4"	1/4"	1/2"	1/2"	1/2"	3/4"
Suction lift[m]	3	3	4	5	5	5	5
Max.air supply pressure[bar]	7	7	7	7	7	7	7
Max.flow[l/m]	17	26	50	150	340	570	1000

Max.head(m)	70	70	70	70	70	70	70
Max.grain diameter(mm)	0.5	1.5	2.5	4	5	6	10

Email this page
Bookmark this page
Print this page

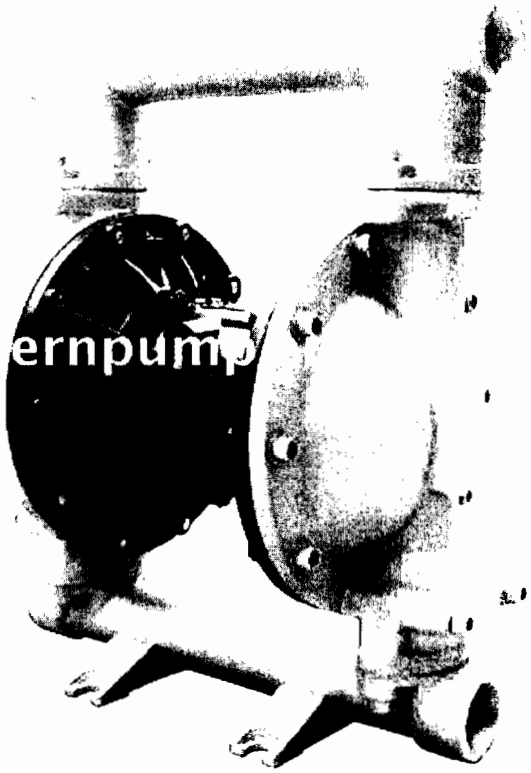

Diaphragm pump

Send your message to this supplier

From:

To: Mr. Kevin Liu

Message:

« Prev Product 1 2 3 4 5 6 7 Next Product »

Other Products from this Supplier

Company Information - Site Map - Partnerships
Buy - Sell - My Alibaba - Community
Trade Shows - Safety & Security -
Help - Contact Us

Browse by: Manufacturers - Wholesalers - China Gold Suppliers - All Products - Countries - Importers - Buying Leads - China - UK - Australia
Alibaba Group: **Alibaba.com:** AliExpress - Alibaba International - AliExpress - Alibaba Japan | Taobao | Alipay | Yahoo! China | Koubei.com | Alisoft
Product Listing Policy - Intellectual Property Policy and Infringement Claims - Privacy Policy - Terms of Use
Copyright Notice **© 1999-2011 Alibaba.com Hong Kong Limited and licensors. All rights reserved.**
Join the Alibaba.com Research Panel

Vertical multi-stage booster pump / boosting pump

Horizontal multi-stage pump

Vertical multistage high pressure pump

Stainless steel multi-stage vertical pump

Horizontal multi-stage pump

See more

Vertical multi-stage water treatment pump

diaphragm pump , pump
products from this supplier

Vertical multistage SS pump , reverse osmosis pump

Horizontal multi-stage pump

Stainless steel vertical multi-stage pump

Vertical multistage clear water pump

Didn't find what you're looking for? Post an RFQ to let the Industry Specialists in Alibaba.com to match the right suppliers for you !
Related Searches: diaphragm pump , pump

Join Free | My Alibaba

Submit Query

Home Products Company Profile Feedback Contact Us

products

search our products S

Zhejiang Xiandai Pump Co., Ltd.

A&V Checked

Add Company to Favorites

Product Showcase (35)

Products [75]

Vertical multistage pump [27]

Horizontal Multistage pump [9]

Stainless steel industrial pump [3]

Fire fighting pump [6]

Submersible Pump [7]

Company Profile

Video Intro

Agents Wanted

Quality Control

R&D

Management

Contact Person

Mr. Kavin Lin

Add to my Contacts

View Contact Details

air powered double diaphragm pump / air power diaphragm pump

air powered double diaphragm pump / air power diaphragm pump

air powered double diaphragm pump / air power diaphragm pump

Add to My Favorites

Place of Origin	China (Mainland)
Model Number	RW
Theory	Centrifugal Pump
Structure	Diaphragm Pump
Usage	Air Pump
Power	Pneumatic
Standard or Nonstandard	Standard
Fuel	Other

Price	Get Latest Price
Minimum Order Quantity	15 Set/Sets
Packaging Details	Carton
Payment Terms	T/T
Supply Ability	600 Set/Sets per Month

View Contact Details

« Prev Product 8 9 10 11 12 13 Next Product »

Detailed Product Description

Air powered / power double diaphragm pump
2.body:PP,PVDF,SS,Cast iron,Aluminum
3.Diaphragm:Teflon,Viton,Hytrel,Santoprene

RW air powered double diaphragm pump / air power diaphragm pump
Pump Material:

1. Wetted parts: cast iron, aluminum alloy, stainless steel 304 or 316l, PP, PVDF etc.
2. Diaphragm: NBR, Viton, Neoprene, Teflon, EPDM, Santoprene, Hytrel etc.

Air operated pump using compressed air as the power source. It can convey corrosive, volatile, flammable, poisonous liquid or fluids with particles and high viscosity liquid etc.

Type	RW06	RW10	RW15	RW25	RW40	RW50	RW80
Suction size[inch]	1/4"	3/8"	1/2"	1"	1 1/2"	2"	3"
Discharge size[inch]	1/4"	3/8"	1/2"	1"	1 1/2"	2"	3"
Air inlet size[inch]	1/4"	1/4"	1/4"	1/2"	1/2"	1/2"	3/4"

	Suction lift[m]	3	3	4	5	5	5	5
	Max.air supply pressure[bar]	7	7	7	7	7	7	7
Email this page	Max.flow[l/m]	17	26	50	150	340	570	1000
Bookmark this page	Max.head[m]	70	70	70	70	70	70	70
Print this page	Max.grain diameter[mm]	0.5	1.5	2.5	4	5	6	10

Language Option

air powered double diaphragm pump / air power diaphragm pump

Send your message to this supplier

From:

To: Mr. Kevin Lin

Message:

« Prev Product 8 9 10 11 Next Product »

Company Information - Site Map - Partnerships
Buy - Sell - My Alibaba - Community - Trade Shows - Safety & Security - Help - Contact Us

Browse by: Manufacturers - Wholesalers - China Gold Suppliers - All Products - Countries - Importers - Buying Leads - China - UK - Australia

Alibaba Group: **Alibaba.com:** Alibaba China - Alibaba International - AliExpress - Alibaba Japan | Taobao | Alipay | Yahoo! China | Koubei.com | Alisoft

Product Listing Policy - Intellectual Property Policy and Infringement Claims - Privacy Policy - Terms of Use

Copyright Notice **© 1999-2011 Alibaba.com Hong Kong Limited and licensors. All rights reserved.**

Join the Alibaba.com Research Panel

Other Products from this Supplier

Vertical multi-stage booster pump / boosting pump

Stainless steel vertical multi-stage pump

Vertical multistage high pressure pump

Stainless steel vertical multi-stage centrifugal pump

Horizontal multi-stage pump

Vertical multi-stage water treatment pump

Vertical multistage RO pump / reverse osmosis pump

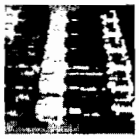
Horizontal multi stage pump

Stainless steel vertical multi-stage pump

Vertical multistage clean water pump

See more double diaphragm pump , air powered double diaphragm pump , air power diaphragm pump **products from this supplier.**

Didn't find what you're looking for? Post an RFQ to let the Industry Specialists in Alibaba.com to match the right suppliers for you !
Related Searches: double diaphragm pump , air powered double diaphragm pump , air power diaphragm pump

Submit Query

Products

Pneumatic diaphragm pump

search our products

Zhejiang Xiandai Pump Co., Ltd.

A&V Checked

Add Company to Favorites

Product Showcase [30]

Products [75]

Vertical multistage pump [27]

Horizontal Multistage pump [9]

Stainless steel industrial pump [3]

Fire fighting pump [6]

[23]

Submersible Pump [7]

Company Profile

Video Intro

Agents Wanted

Quality Control

R&D

Management

Contact Person

Mr. Kevin Lin

Add to my Contacts

View Contact Details

Pneumatic diaphragm pump

Pneumatic diaphragm pump

Add to My Favorites

Place of Origin	China (Mainland)
Model Number	RW
Theory	Centrifugal Pump
Structure	Diaphragm Pump
Usage	Air Pump
Power	Pneumatic
Standard or Nonstandard	Standard
Fuel	Other

Price:	Get Latest Price
Minimum Order Quantity:	16 Set/Sets
Packaging Details	Carton
Payment Terms:	L/C,T/T
Supply Ability	500 Set/Sets per Month

View Contact Details

« Prev Product ... 19 20 21 ... Next Product »

Detailed Product Description

Features:
1.Pneumatic diaphragm pump
2.Pumpbody:PP,PVDF,SS,Cast iron,Aluminum
3.Diaphragm:Teflon,Viton,Hytrel,Santoprene

RW Pneumatic diaphragm pump.
Pump Material:
1. Wetted parts: cast iron, aluminum alloy, stainless steel 304 or 316l, PP, PVDF etc.
2. Diaphragm: NBR, Viton, Neoprene, Teflon, EPDM, Santoprene, Hytrel etc.

Air operated pump using compressed air as the power source. It can convey corrosive, volatile, flammable, poisonous liquid or fluids with particles and high viscosity liquid etc.

Type	RW06	RW10	RW15	RW25	RW40	RW50	RW80
Suction size[inch]	1/4"	3/8"	1/2"	1"	1 1/2"	2"	3"
Discharge size[inch]	1/4"	3/8"	1/2"	1"	1 1/2"	2"	3"

	Ait inlet size[inch]	1/4"	1/4"	1/4"	1/2"	1/2"	1/2"	3'4"
	Suction lift[m5	3	3	4	5	5	5	5
Email this page	Max.air supply pressure[bar]	7	7	7	7	7	7	7
Bookmark this page	Max.flow[l/m]	17	26	50	150	340	570	1000
Print this page	Max.head[m]	70	70	70	70	70	70	70
	Max.grain diameter[mm]	0.5	1.5	2.5	4	5	6	10

Language Option

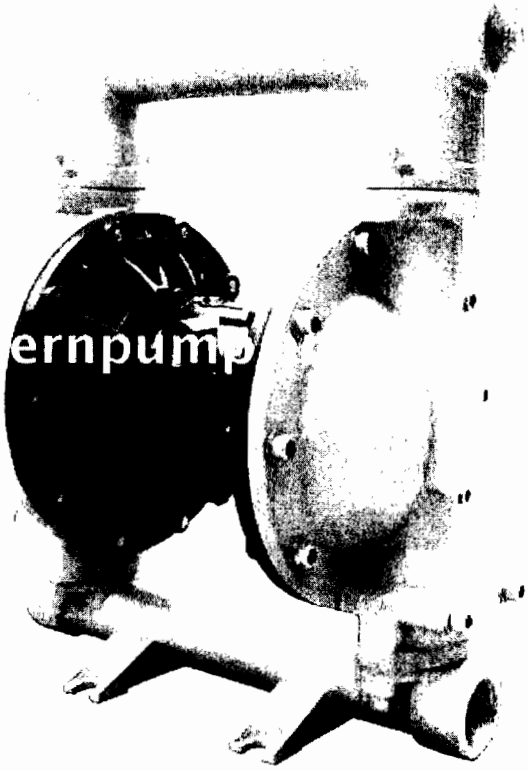

Pneumatic diaphragm pump

Send your message to this supplier

From:

To: Mr. Kevin Lin

« Prev Product 15 16 17 18 19 20 21 Next Product »

Company Information - Site Map - Partnerships
Buy - Sell - My Alibaba - Community - Trade Shows - Safety & Security - Help - Contact Us

Browse by: Manufacturers - Wholesalers - China Gold Suppliers - All Products - Countries - Importers - Buying Leads - China - UK - Australia

Alibaba Group: **Alibaba.com:** Alibaba China - Alibaba International - Alibaba.com - Alibaba Taobao | Taobao | Alipay | Yahoo! China | Koubei.com | Ausoft

Product Listing Policy - Intellectual Property Policy and Infringement Claims - Privacy Policy - Terms of Use

Copyright Notice © 1999-2011 **Alibaba.com Hong Kong Limited and licensors. All rights reserved.**

Join the Alibaba.com Research Panel

Other Products from this Supplier

Vertical multi stage booster pump / booster pump

Stainless steel vertical multi stage pump

Vertical multistage high pressure pump

Stainless steel multistage vertical pump

Horizontal multi stage pump

Vertical multi stage water treatment pump

Vertical multistage RO pump / reverse osmosis pump

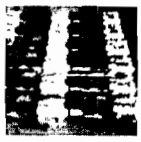
Horizontal multi stage pump

Stainless steel vertical multi stage pump

Verbcal multistage clean water pump

See more diaphragm pump , Pneumatic diaphragm pump , pump products from this supplier.

Didn't find what you're looking for? Post an RFQ to let the Industry Specialists in Alibaba.com to match the right suppliers for you !
Related Searches: diaphragm pump , pneumatic diaphragm pump , pump