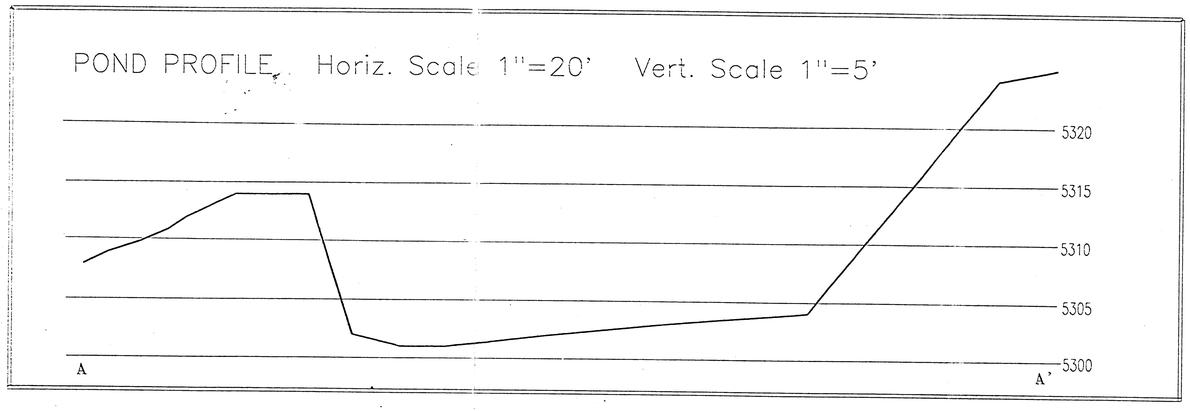

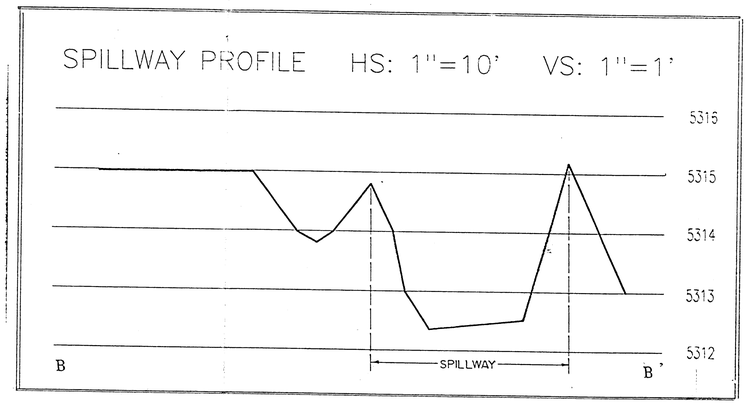

LEGEND

- ACCESS DIRT ROAD
- COMBINATION SPILLWAY
- V-DITCH
- SAFETY BERMS
- × 5338.5 SPOT ELEVATION
- 5300 INDEX CONTOUR
- INTERMEDIATE CONTOUR
- GAUGE POST
- INLET CHANNEL

NOTES:

1. GAUGE POST BASE ELEVATION 5300.8
2. FOR BLUELINE ELEVATION REFER TO TO TABLE 11-55 IN THE PAP.

Lowe Stockpile Pond

Elevation	Contour Area (Ac)	Increm. Volume (Ac-ft)	Cumulative Volume (Ac-ft)	Reserve Volume (Ac-ft)
5300.8	0.00	0.00	0.00	5.60
5301.0	0.01	0.00	0.00	5.60
5302.0	0.11	0.06	0.06	5.54
5303.0	0.23	0.17	0.23	5.37
5304.0	0.35	0.29	0.52	5.08
5305.0	0.40	0.38	0.90	4.71
5306.0	0.44	0.42	1.32	4.29
5307.0	0.47	0.46	1.77	3.83
5308.0	0.50	0.49	2.26	3.35
5309.0	0.53	0.52	2.77	2.83
5310.0	0.57	0.55	3.32	2.28
5311.0	0.60	0.59	3.91	1.70
5312.0	0.64	0.62	4.53	1.08
5313.0	0.68	0.66	5.19	0.42
5313.6	0.70	0.42	5.60	-0.00

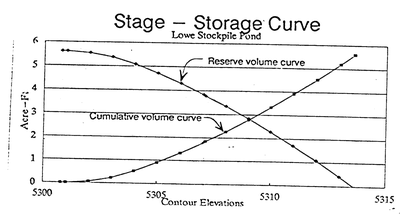

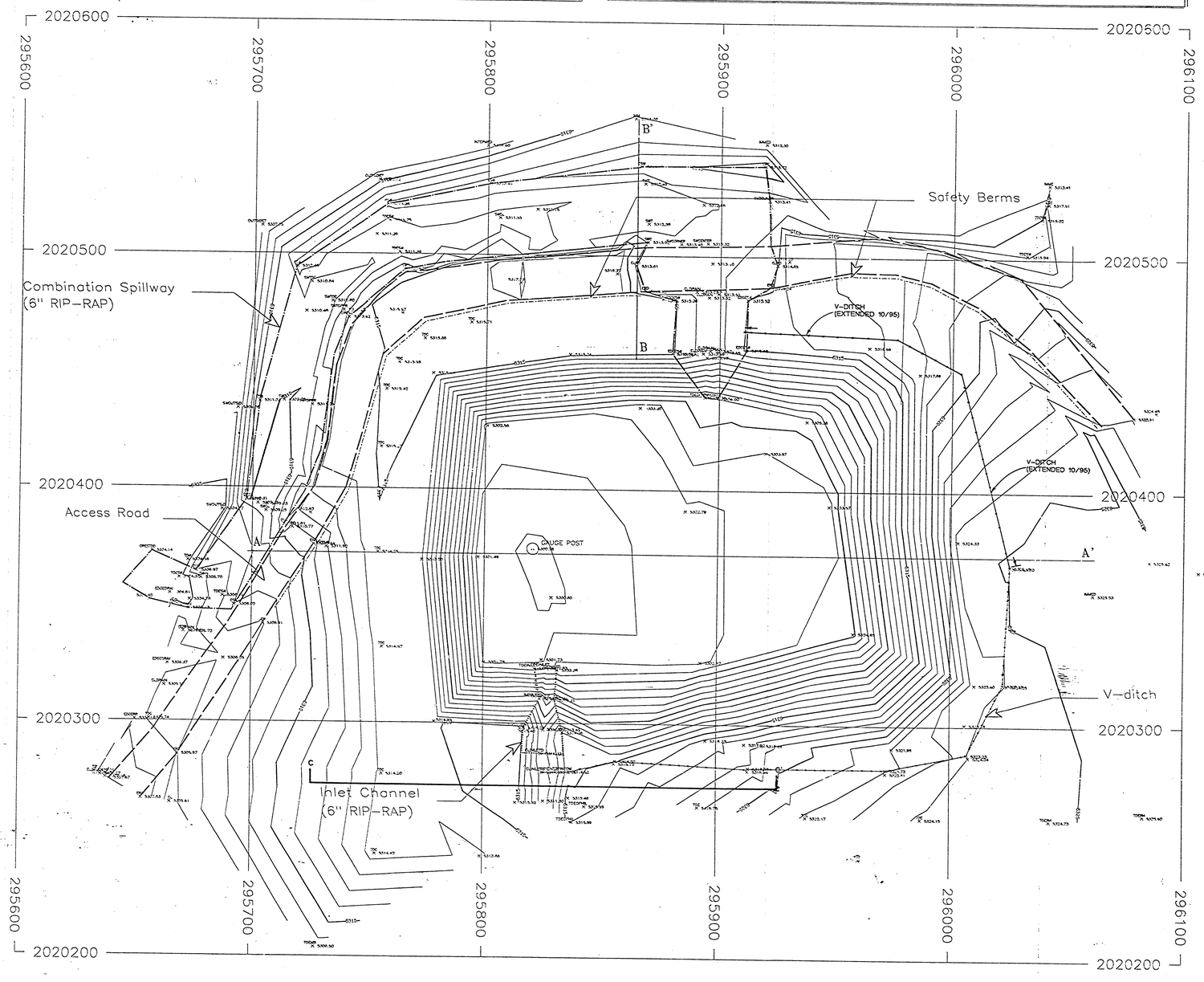

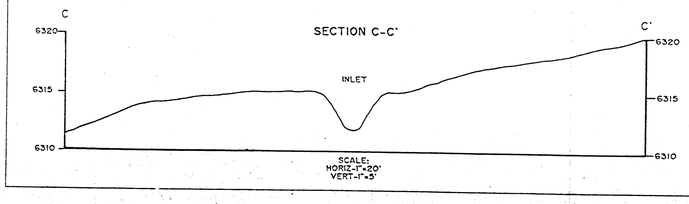

CERTIFICATION STATEMENT

I, Leonard Raymond, hereby certify that this drawing was reviewed by me and that the information shown is complete and accurate to the best of my knowledge.

LEONARD RAYMOND NEW MEXICO 5800 PROFESSIONAL ENGINEER

2-3-99

MAR 1999 APPROVED

20 0 20 40

CONTOUR INTERVAL: 1'

RON C. VAN VALKENBURG NEW MEXICO 9261 REGISTERED PROFESSIONAL ENGINEER

REV. NO.	DATE	REVISIONS	APPROVALS: DRAFT BY	ENGR.	CHIEF ENGR.	PROJECT MGR.
1	6-17-93	ADDED X-SECTION C-C'	PLP			
2	8/20/93	CHANGE EXHIBIT NO. TO 11-45	JG			
3	11-21-95	ADDED V-DITCH EXTENSION.		DJL		LR
4	9-14-98	ADDED NOTES 1 AND 2.	RY			

EXHIBIT 11-45

BHP MINERALS INTERNATIONAL INC.

NAVAJO MINE

FRUITLAND, NEW MEXICO

LOWE STOCKPILE POND AS-BUILT

DRAWN BY SYP	SCALE 1"=20'		
APPROVED BY AAP	DATE 04/20/92		
DRAWING NO EXHIBIT 29-98	LOCATION NO MF-D2a		