EXHIBIT 11–57 LOWE SILOS FACILITIES ACCESS ROAD AS–BUILT

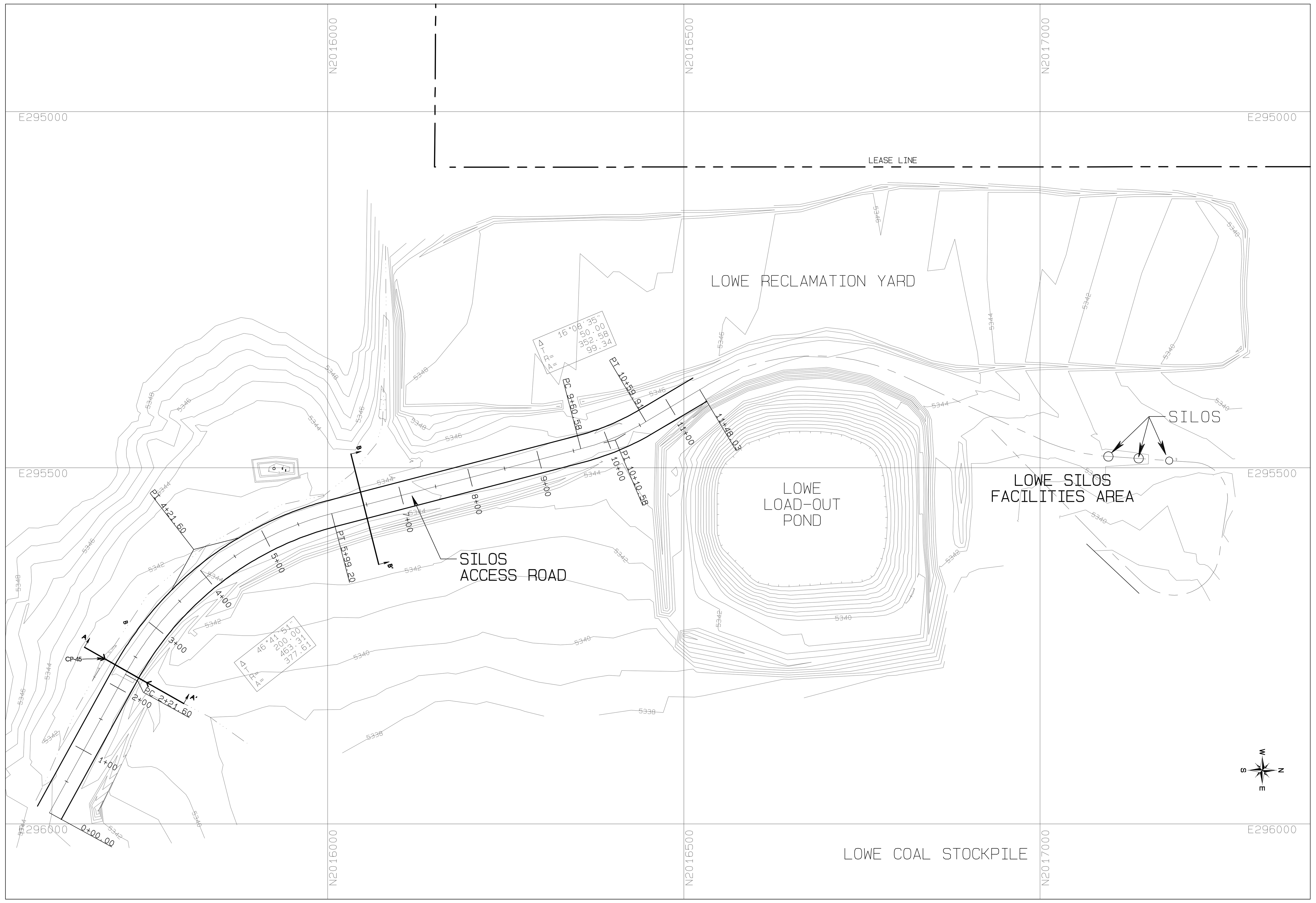

PLAN VIEW
SCALE: 1"=100'

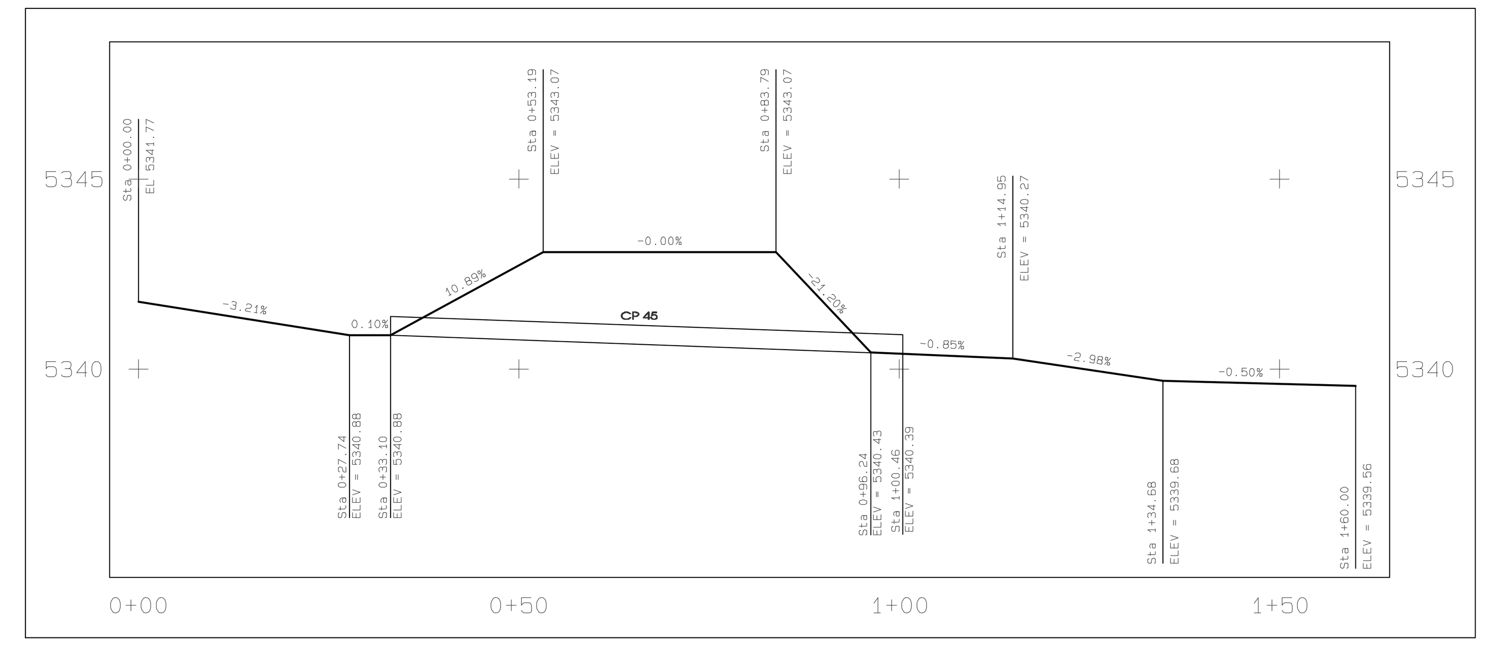

AS-BUILT X-SECTION AA''
HORIZ.= 1"=20'
VERT. = 1"=4'

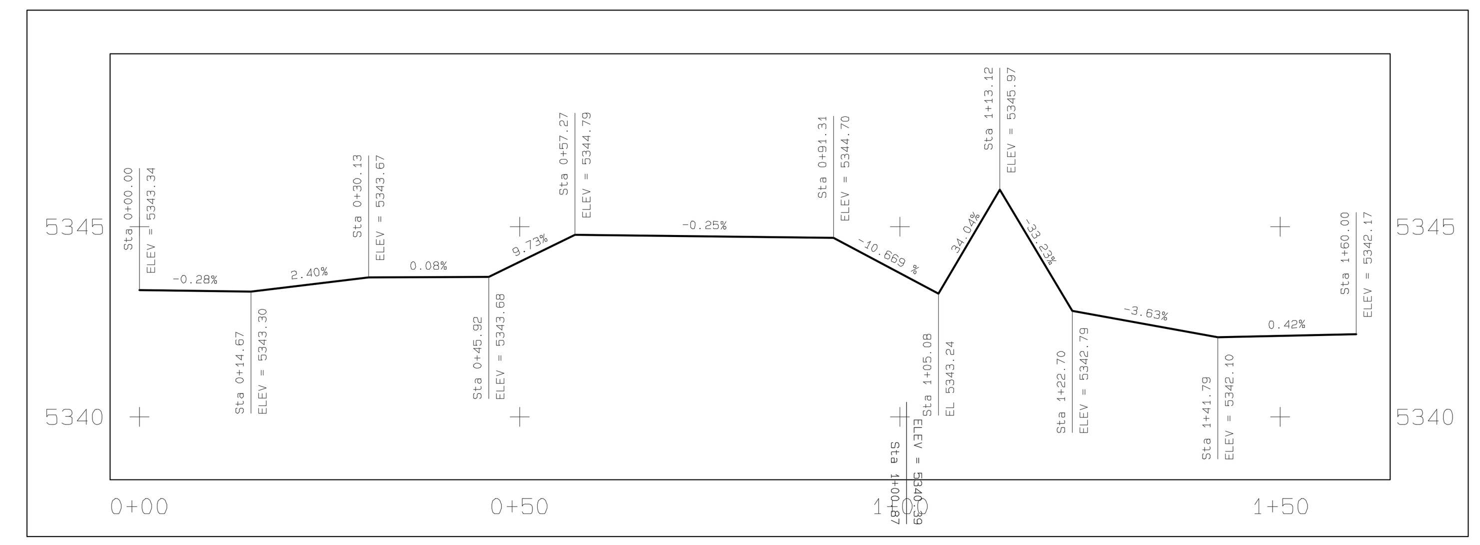

AS-BUILT X-SECTION BB'
HORIZ.= 1"=20'
VERT. = 1"=4'

LEGEND

- DIRT ROAD
- BUILDING
- FENCE
- CULVERT
- DRAINAGE
- POWERLINE
- INDEX CONTOUR (5300)
- INTERMEDIATE CONTOUR (5298)
- PERMIT/LEASE BOUNDARY

NOTES

1. For hydrology and design information refer to Appendix 11-V in the approved PAP.
2. The watershed areas for culverts are shown on Exhibit 11-12E.

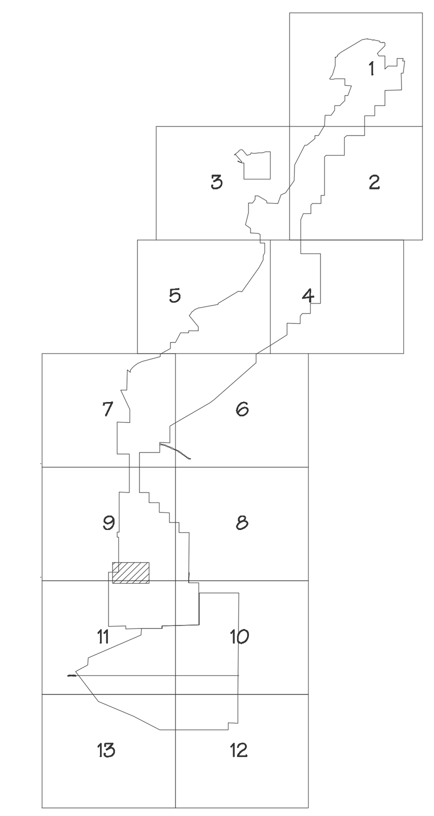

SCALE AS NOTED

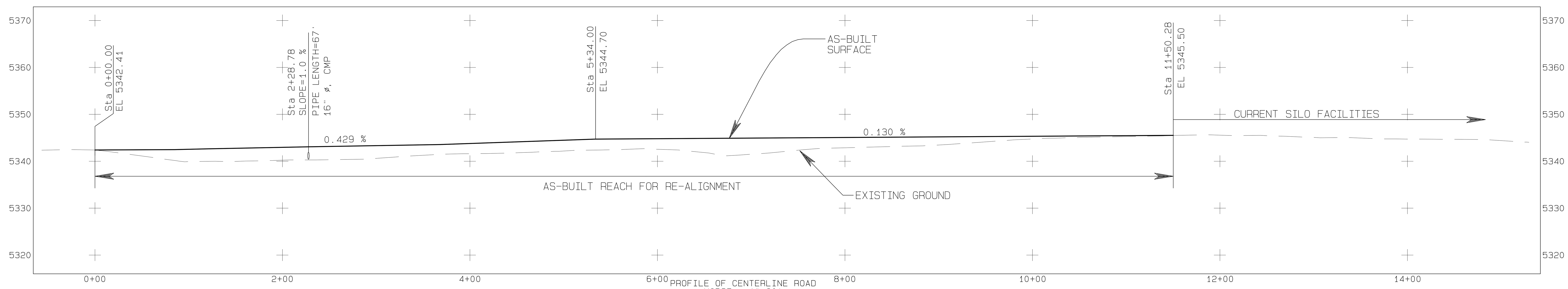

PROFILE OF CENTERLINE ROAD
HORIZ.= 1"=60'
VERT. = 1"=12'

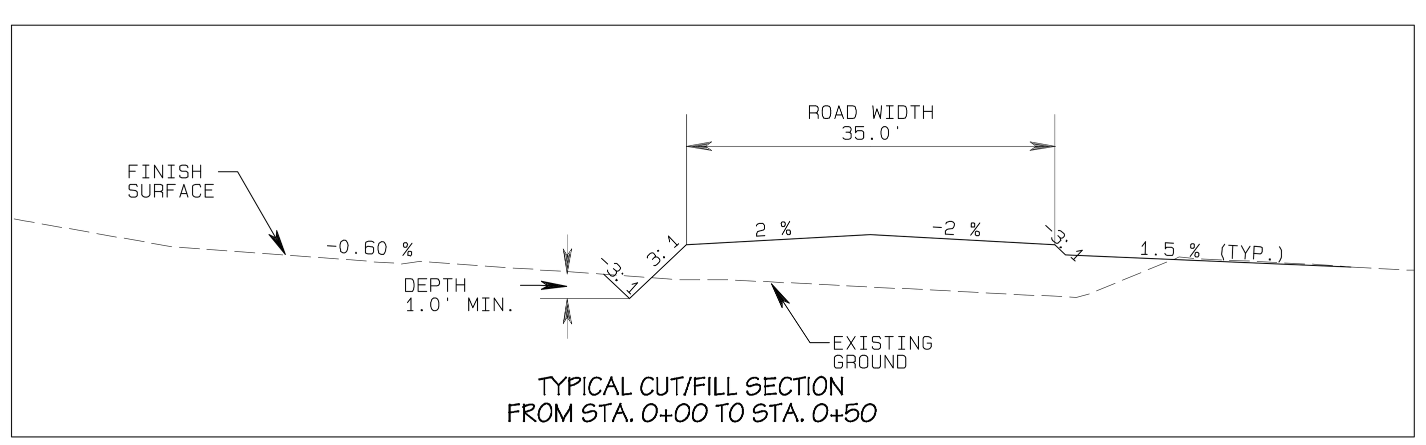

TYPICAL CUT/FILL SECTION
FROM STA. 0+00 TO STA. 0+50

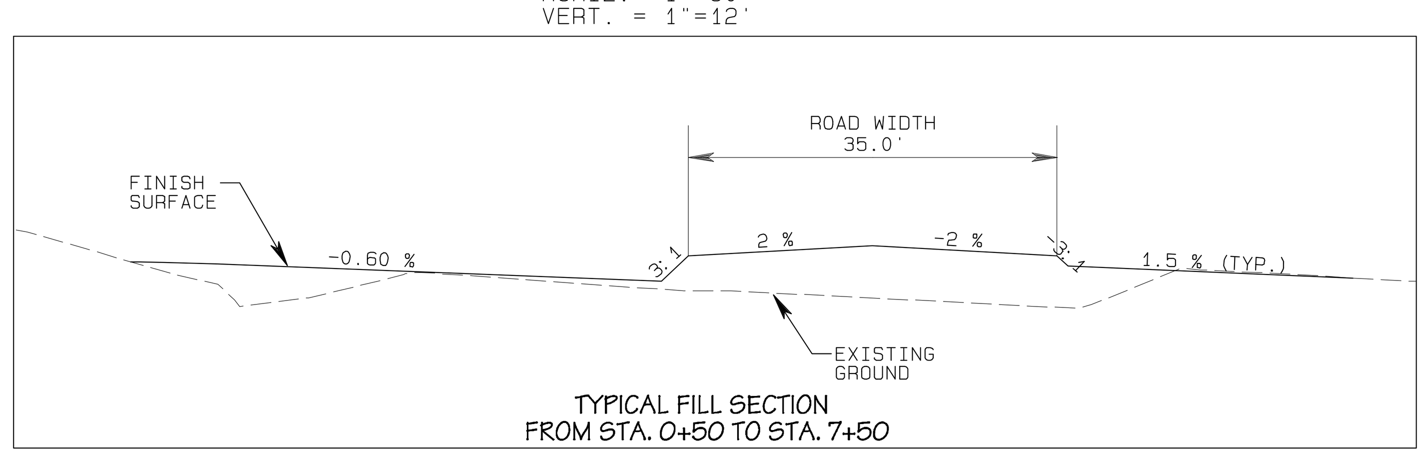

TYPICAL FILL SECTION
FROM STA. 0+50 TO STA. 7+50

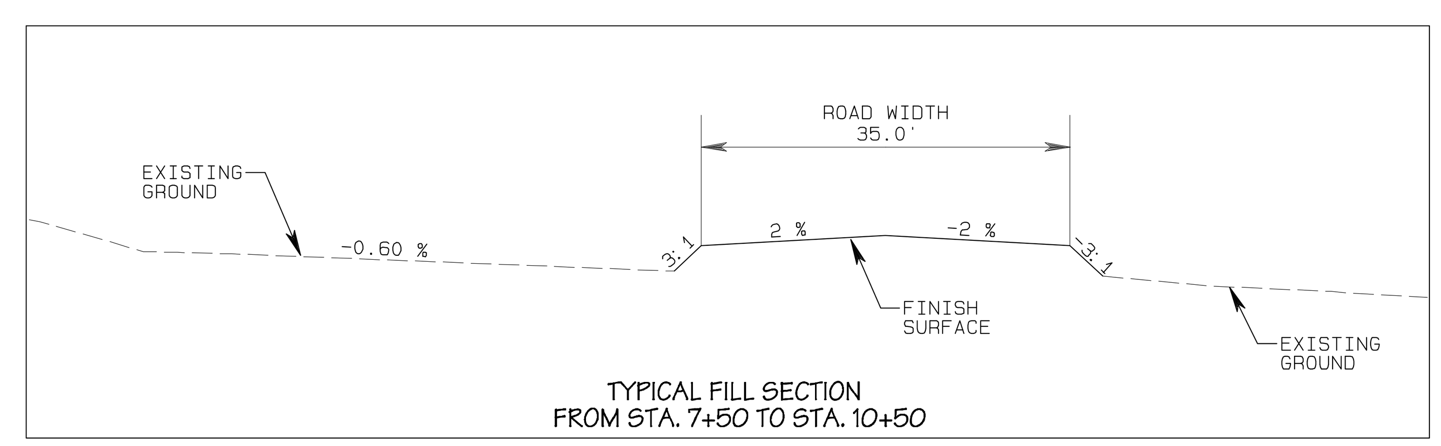

TYPICAL FILL SECTION
FROM STA. 7+50 TO STA. 10+50

ABOVE TYPICAL SECTIONS
NOT TO SCALE

CERTIFICATION STATEMENT

I, Ron C. VAN VALKENBURG, hereby certify that this drawing was reviewed by me and that the information shown is complete and accurate to the best of my knowledge.

Ron C. VAN VALKENBURG NEW MEXICO 9263 LICENSED PROFESSIONAL ENGINEER

	REVISION	DATE
08-A	Submitted to OSM for Approval	4/20/09
08-B	PREPARED AS-BUILT AND SUBMITTED TO OSM FOR REVIEW	11-23-09

PROJECT MANAGER: FG
ENGR. of RECORD: RCV
REG. NO: 9263
SRVYR of RECORD:
REG. NO:

bhpbilliton
BHP NAVAJO COAL CO.
NAVAJO MINE
PO BOX 1717, FRUITLAND, NEW MEXICO, 87416 PHONE 505-598-3209/FAX 505-598-3361

PROJECT:
DATE: 4/20/09
DESIGNED BY: RY
DRAWN BY: RY
CHECKED BY: RCV
APPROVED BY: RCV

PLAN, PROFILE AND SECTIONS

EXHIBIT 11–57
LOWE SILOS FACILITIES ACCESS ROAD
AS–BUILT

DRAWING
SHEET 1 OF 1

G:\Gs\Permit F\Ch 11\Exhibit 11-057\As-Built Data\Exh 11-57_Lowe Silos Access Rd_As-Built.pro
Mon Nov 30 12:40:05 2009