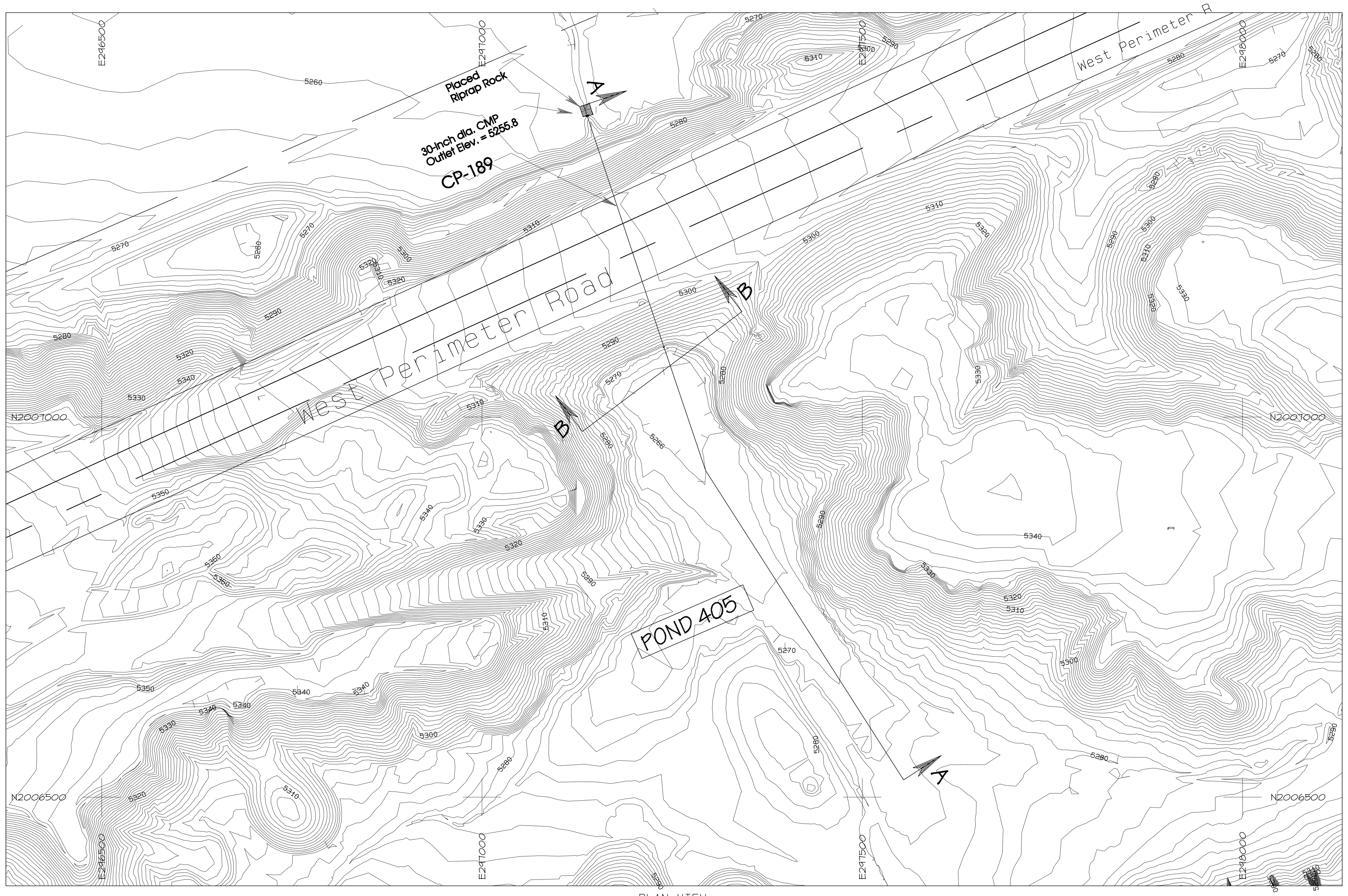

PLAN VIEW
1"=100'

N
W E
S

A4N Pond 405 As-Built Stages/Storage Table

ELEV feet	AREA acres	VOLUME ac-ft	CUM. VOLUME ac-ft
5264			
5265	0.13	0.1	0.1
5266	0.26	0.2	0.3
5267	0.46	0.4	0.6
5268	0.67	0.6	1.2
5269	0.94	0.8	2.0
5270	1.32	1.1	3.1
5271	1.59	1.5	4.6
5272	1.90	1.7	6.3
5273	2.36	2.1	8.4
5274	2.86	2.6	11.1
5375	3.40	3.1	14.2

Pond Crest/Spillway Elevation 5272.9
Design Volume Capacity (AC-FT) 8.2

LEGEND

- ROAD
- WATERSHED
- BUILDING
- FENCE
- IRRIGATION LINE
- CULVERT
- DAM
- DRAINAGE
- RAILROAD
- TREES
- POWERLINE
- ×5338.5 SPOT ELEVATION
- 5300 INDEX CONTOUR
- 5298 INTERMEDIATE CONTOUR
- 218 5422.45
- L-30 LEASE CORNER
- PERMIT/LEASE BOUNDARY

NOTES

1. For hydrology and design information refer to Table 11-5 in the approved PAP.
2. The watershed areas for culverts are shown on Exhibit 11-12F.
3. The watershed areas and location for Ponds are shown on Exhibit 11-13F.

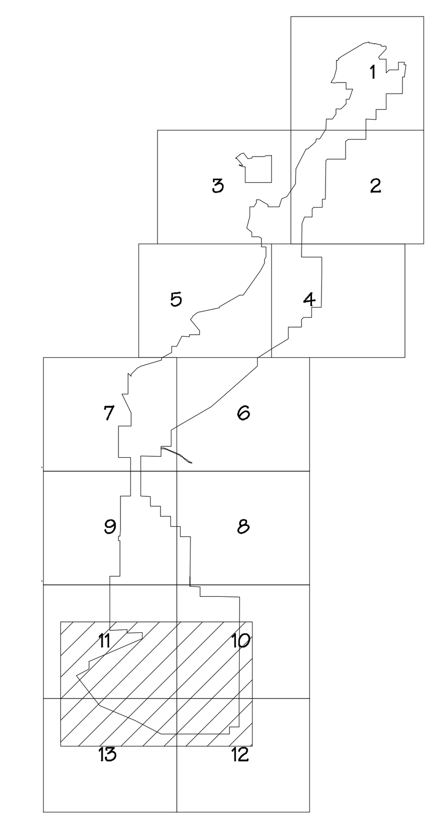

SCALE AS NOTED

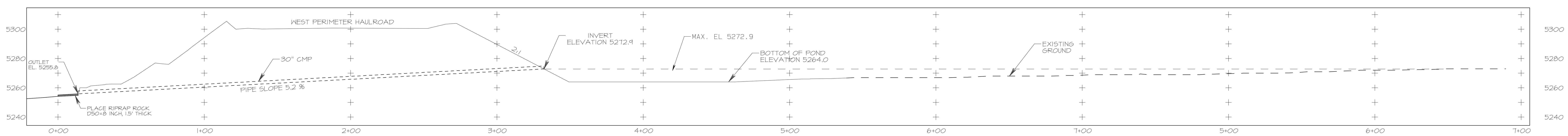

CROSS SECTION A - A
SCALE - 1"=40'

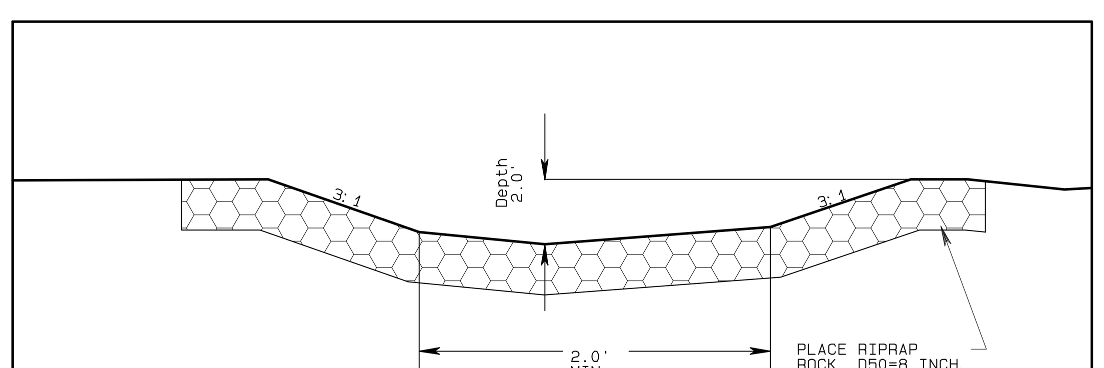

CROSS SECTION
CULVERT OULET (CP-189)
NO SCALE

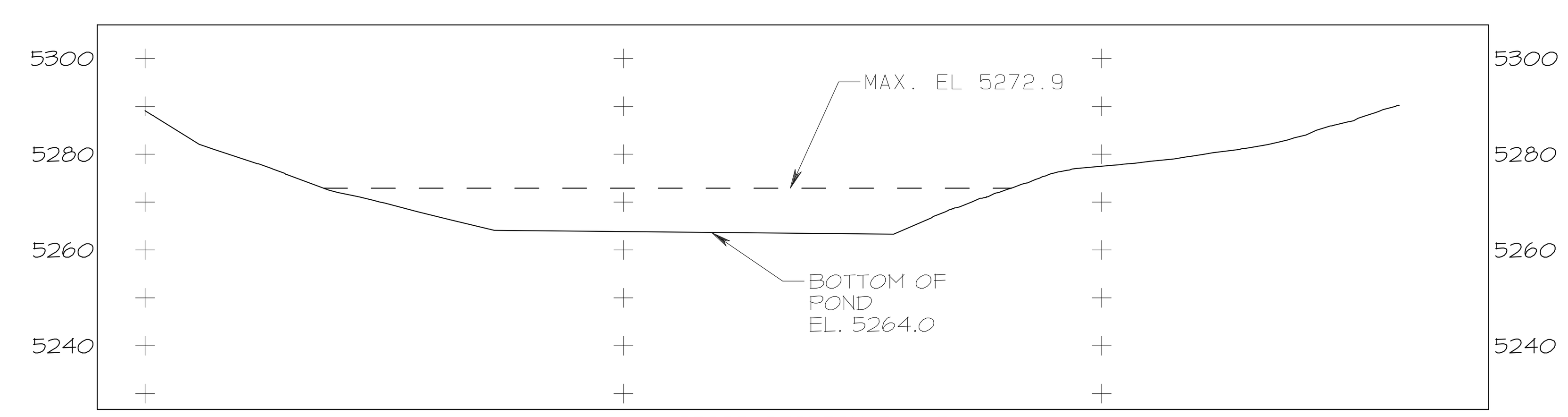

CROSS SECTION B - B
SCALE - 1"=30'

CERTIFICATION STATEMENT

I, Ron C. Van Valkenburg, hereby certify that this structure has been constructed in accordance with the approved design plans and that the information shown is complete and accurate to the best of my knowledge except as noted below.

1. Minor elevation difference for contour result in smaller capacity. The smaller as-built capacity will contain the design 100-yr 6-hr storm event.

	REVISION	DATE
1	SUBMITTED TO OSM FOR APPROVAL	08/28/09
2	UPDATED A4N DEVELOPMENT, PD-405 AND SUBMITTED TO OSM FOR APPROVAL	01/14/10
3	PREPARED AS-BUILT FOR A4N POND-405 AND SUBMITTED TO OSM FOR REVIEW(NOT SUBMITTED)	10/20/10
11-A	SUBMITTED TO OSM FOR REVIEW AND APPROVAL.	01/26/2011

PROJECT MANAGER: FG
ENGR. of RECORD: RCV
REG. NO: 9263
SRVYR of RECORD:
REG. NO:

bhpbilliton
BHP NAVAJO COAL CO.
NAVAJO MINE
PO BOX 1717, FRUITLAND, NEW MEXICO, 87416 PHONE 505-598-3209/FAX 505-598-3361

ACCOUNT:
DATE: AUGUST 31, 2009
DESIGNED BY: RCV
DRAWN BY: RY
CHECKED BY: RCV
APPROVED BY: RCV

PLAN, PROFILE AND SECTIONS

EXHIBIT 11-05
AREA 4 NORTH
POND 405
As-Built

DRAWING

SHEET 1
OF 1

G:\Gs\Permit_F\Ch 11\Exh 11-004-05_A4N PDS 404-405\OSM Subm-12011\Exh 11-04_Pond-405_As-Built_A.pro
Wed Jan 26 12:03:07 2011