100-23-10

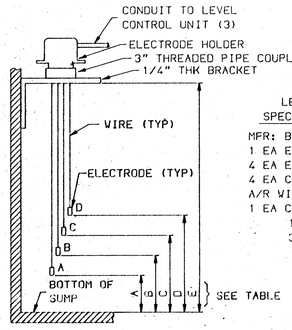

LEVEL SWITCH MOUNTING DETAIL

LEVEL SWITCH SPECIFICATIONS **

MFR: B/W CONTROLS
1 EA ELECTRODE HOLDER: 6012-E4-CI-EP1
4 EA ELECTRODES: 6013-W5
4 EA CONNECTORS: 6013-C-BR
A/R WIRE: 6013-SW
1 EA CONTROL UNIT: 5300 S-V-OC
115 VAC OPERATION
3 A INDUCTIVE @ 120 V CONTACT RATING

TABLE OF ELEVATION (INCHES) ABOVE SUMP BOTTOM

PUMP NO.	2	3	** 4A	** 4B	1	FUNCTION
DIST A	12	12	12	12	12	GROUND ELECTRODE
DIST B	27	27	27	27	48	PUMP OFF
DIST C	75	75	57	NOT USED	60	PUMP ON
DIST D	NOT USED	NOT USED	NOT USED	84	NOT USED	PUMP ON
DIST E	132	132	108	108	84	BRACKET HEIGHT

ALL DISTANCES ±1"

** = EXISTING SET OF ELECTRODES ARE SHARED BY PUMPS #4A & #4B. HOWEVER, EACH PUMP HAS A SEPARATE CONTROL UNIT.

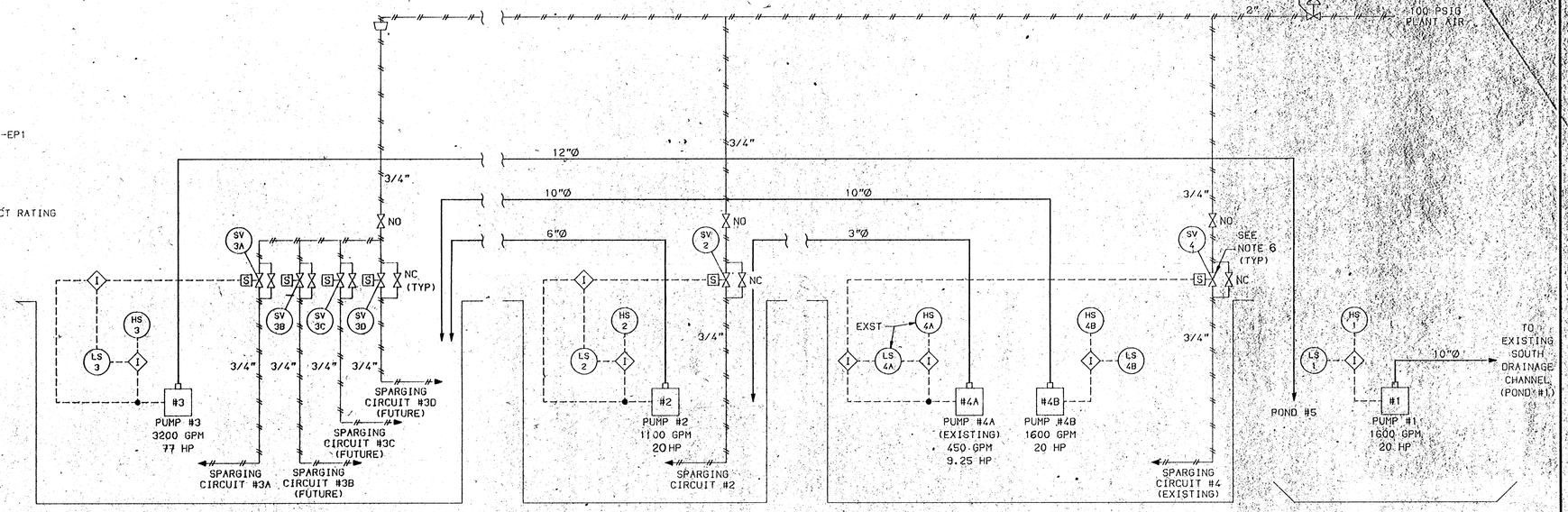

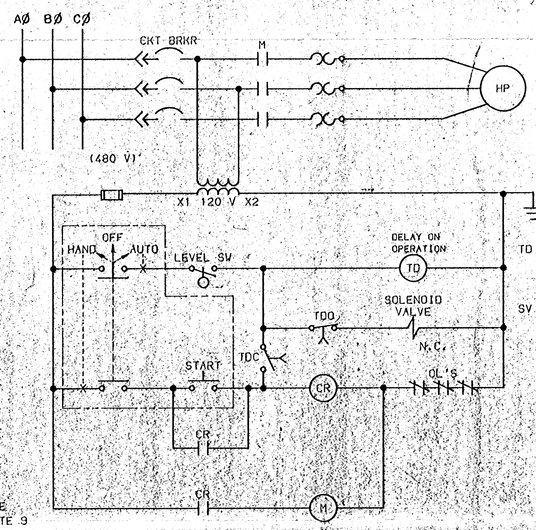

TD SPEC: P&B #CGB-38-70005M, OR EQUAL, 120 VAC, 3 VA COIL, 10 A CONTACT 0.5-5 MINUTE ADJ DELAY

SV SPEC: ASCO#8210D3 OR EQUAL EXPL PROOF, WATER-TIGHT ENCL, 3/4" BRASS, 120 VAC, 6 W COIL

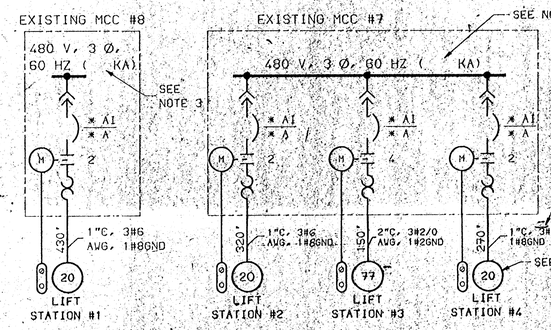

TYPICAL SCHEMATIC FOR PUMPS #2, #3, #4A

NOTE: PUMP #4A WIRING IS EXISTING, BUT MUST BE MODIFIED TO AGREE WITH ABOVE SCHEMATIC

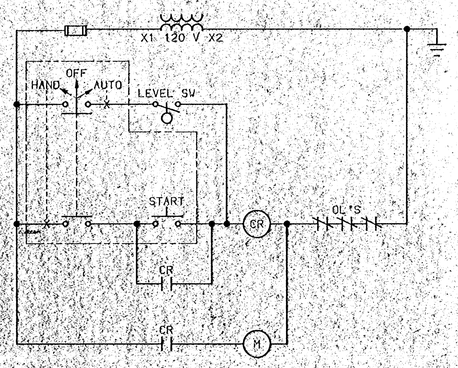

TYPICAL SCHEMATIC FOR PUMPS #1 & #4B

LEGEND:

- AIR LINE
- ELECTRICAL SIGNAL
- (I) ELECTRICAL INTERLOCK
- (LS 4B) LEVEL SWITCH #4B
- (HS 2) HAND SWITCH #2

NOTES:

1. ADJUSTABLE INSTANTANEOUS MAGNETIC TRIP ONLY CIRCUIT BREAKER
   * AI - INDICATES ADJUSTABLE INSTANTANEOUS TRIP SETTING
   * A - INDICATES CONTINUOUS RATING
2. MOTOR STARTER VENDOR SHALL SIZE COMBINATION STARTERS TO MEET NEC REQUIREMENTS.
3. SHORT CIRCUIT RATING OF EXISTING MCC'S SHALL BE PROVIDED BY UII.
4. UII SHALL PROVIDE THE HAZARDOUS AREA CLASSIFICATION FOR THE ELECTRICAL EQUIPMENT.
5. STATED HP OF PUMPS IS PRELIMINARY. IT SHALL BE FINALIZED AT THE ARRIVAL OF VENDOR DATA.
6. SOLENOID VALVE DE-ENERGIZES (SHUTTING OFF AIR) WHEN CORRESPONDING PUMP TURNS ON.
7. UNDERGROUND CONDUIT TO HAVE RED CONCRETE ENCASEMENT. CONDUIT SHALL BE BURIED 36" BELOW GROUND LEVEL. CONTRACTOR SHALL USE ANY EXISTING AVAILABLE CONDUIT RUN AS DIRECTED BY OWNER.
8. ALL ELECTRICAL WORK SHALL COMPLY WITH THE NATIONAL ELECTRICAL CODE (NEC) AND ALL LOCAL CODES.
9. THE FINAL WIRING ARRANGEMENT AND CONDUIT SIZE SHALL BE VERIFIED BY UII.

AS-BUILT

AS BUILT

EXHIBIT II-23

REFERENCE DWGS

DRAWING NO.	TITLE
01-36-001	PLOT PLAN, PIPING DIAGRAM, G.A. & MECH. FOR L.S. #1/#2/#3 & #4

REVISIONS

NO.	BY	DATE	CKD	DESCRIPTION
Z	JG	8/20/93		CHANGE EXHIBIT NO TO II-23 AND CHANGE CA NAME
1	JG	10-15-89	BL	AS BUILT BUL. #D-007
0	mjo	04/07/86	NHR	ISSUED FOR CONSTRUCTION BUL #D-001
B	mjo	02/13/86	JMC	ISSUED FOR CLIENT APPROVAL TL#022
A	JMC	01/06/86	NHR	ISSUED FOR CLIENT APPROVAL TL#021

APPROVALS

DEPT \ REV	A	B	0	1
ARCH				
CIV/STRL	MLT	MLT	MLT	PSD
MECH	JRM	JRM	JRM	JRM
ELECT	JMC	JMC	JMC	JMC
INSTM	NHR	NHR	NHR	NHR
PIPING	JVM	JVM	JVM	JR
SAFETY	KBN			
DEPT MGR	KHAP	KHAP	KHAP	KHAP
PROJECT	MLT	MLT	MLT	MLT

SCALE NONE	DATE
DRAWN BY mjo	02/05/86
DESIGNED BY NHR/JMC	02/05/86
CHECKED BY NHR/JMC	02/06/86

CLIENT APPROVALS

REV	BY	DATE
A	[illegible]	4/5/86
0	[illegible]	4/7/86
1	[illegible]	10/10/89

MORRISON-KNUDSEN ENGINEERS, INC.
A MORRISON-KNUDSEN COMPANY

NAVAJO MINE PROJECT - AREA 1
FRUITLAND, NEW MEXICO
BHP MINERALS INTERNATIONAL

DRAWING TITLE
PHASE 2
WASTE WATER COLLECTION/TREATMENT
ELECTRICAL INSTALLATION

CONTRACT NO. 1724-30

30 X 42

DRAWING NO. 01-37-001

REFERENCE NO. E1-1

REV. 1