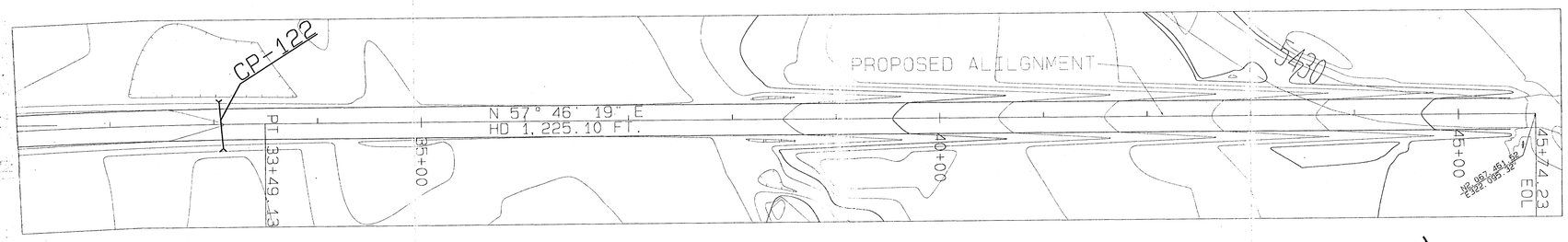

PLAN VIEW
Hztl. Scale: 1" = 50'

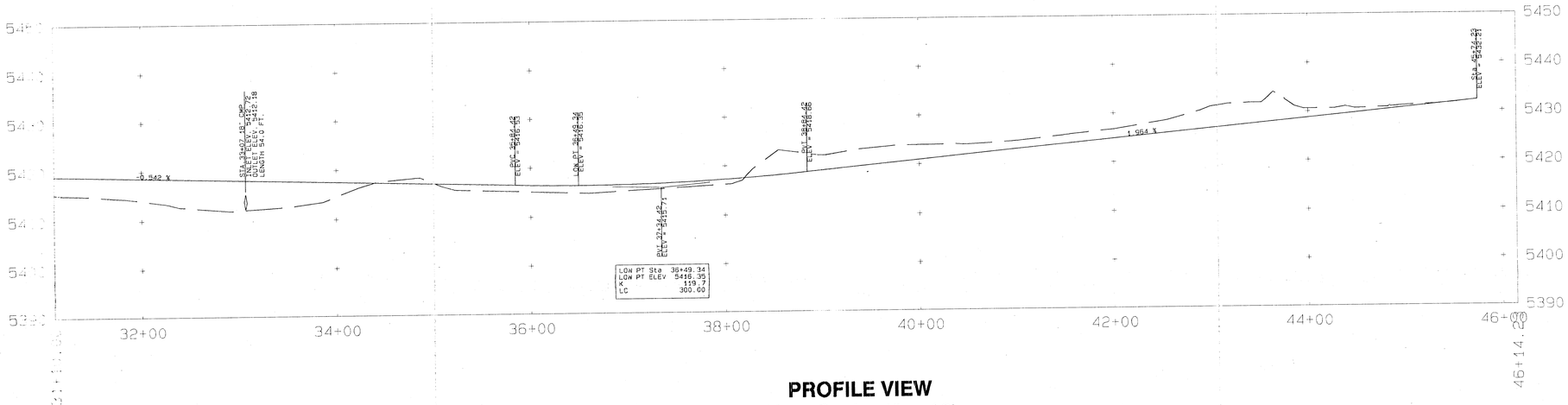

PROFILE VIEW
Vert. Scale: 1" = 10'

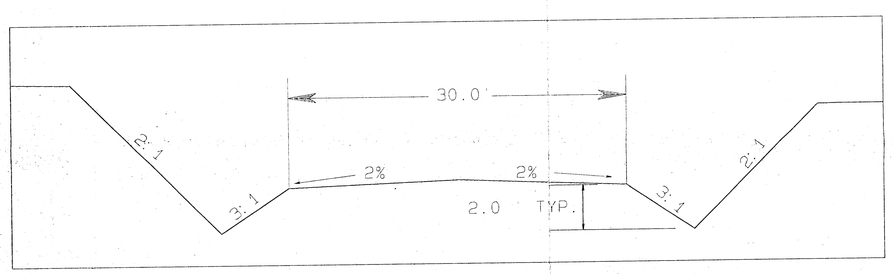

TYPICAL CUT SECTION
NOT TO SCALE

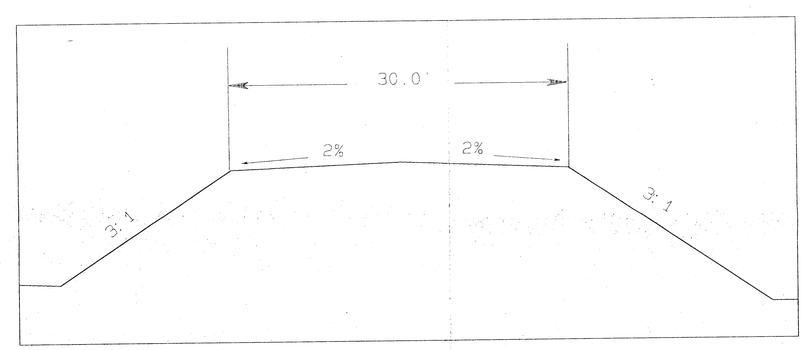

TYPICAL FILL SECTION
NOT TO SCALE

LEGEND

- ROAD
- WATERSHED
- BUILDING
- FENCE
- IRRIGATION LINE
- CULVERT
- DAM
- DRAINAGE
- RAILROAD
- TREES
- POWER LINE
- ×5338.9 SPOT ELEVATION
- 5300 INDEX CONTOUR
- 5298 INTERMEDIATE CONTOUR
- 218 5422.45 LEASE CORNER
- L-30 LEASE CORNER

NOTES

1. For hydrology and design information refer to Appendix 11-2 in the approved PAP.

CERTIFICATION STATEMENT

I, Leonard Raymond, hereby certify that this drawing was reviewed by me and that the information shown is accurate and complete to the best of my knowledge.

LEONARD RAYMOND NEW MEXICO 6630 REGISTERED PROFESSIONAL ENGINEER

11-13-97

REV NO	DATE	DRAFT BY	REVISION DESCRIPTION	ENG.	K.A.	P.K.	P.S.	CHIEF ENG.
A	11/12/97	RY	SUBMIT FOR REGULATORY APPROVAL	APPROVALS				

APPROVED JAN 1998

EXHIBIT 11-119B

NAVAJO COAL COMPANY

NAVAJO MINE

P.O. BOX 159 FRUITLAND, NEW MEXICO 87416

RAMP 7 ROAD REALIGNMENT
PLAN / PROFILE AND TYPICAL SECTIONS

PREPARED BY RY	DRAWN BY RY	SCALE AS NOTED
APPROVED BY LR	DATE 11/12/97	REF. DWG
DWG LOC	\\QSM_SUBM\PER_FACG\CH_11\11-119\EXHIBIT3\B-R7RCAD.PRO	