APPENDIX 11-TT

COTTONWOOD ARROYO CROSSING
FINAL DESIGN REPORT
Prepared by URS

and

COTTONWOOD ARROYO PRE-MINE HYDROLOGY AND SEDIMENTOLOGY
Prepared by BNCC

FINAL DESIGN REPORT

Cottonwood Arroyo Crossing
BHP Navajo Coal Company
Fruitland, New Mexico

VOLUME 1 OF 2

Final Design Report and
Appendices A through D

Prepared for:
BHP Navajo Coal Company
P.O. Box 1717
Fruitland, New Mexico 87416

Prepared by:
URS Corporation
One Park Square, Suite 900
6501 Americas Parkway NE
Albuquerque, New Mexico 87110

MAY 2007

APPROVALS

The contents of this Design Report and associated construction drawings and specifications have been reviewed and approved by:

KENT M. WHITMAN
NEW MEXICO
6170
REGISTERED PROFESSIONAL ENGINEER

Kent M. Whitman, P.E.
Chief Engineer (Civil)

5/2/07
Date

DONALD T. LOPEZ
NEW MEXICO
5122
REGISTERED PROFESSIONAL ENGINEER

Donald T. Lopez, P.E.
Chief Engineer (Civil)

5/3/07
Date

BARRY T. CHUNG
NEW MEXICO
15471
LICENSED PROFESSIONAL ENGINEER

Barry T. Chung, P.E.
Chief Engineer (Structural)

05/02/07
Date

Christi Tanner, P.E. (Texas)
Senior Consultant (Civil)

5/3/07
Date

J. Steven Raugust, R.G.
Chief Engineer/Project Manager

5/3/07
Date

TABLE OF CONTENTS

Section **Page**

1.0 PROJECT SCOPE 4
- 1.1 Introduction 4
- 1.2 Design Criteria 5
- 1.3 Design Assumptions 5
- 1.4 Terms of Reference 6

2.0 SITE DESCRIPTION 8

3.0 SITE INVESTIGATIONS 12
- 3.1 Summary of MWH Geotechnical Investigation Results 12

4.0 CROSSING DESIGN 13
- 4.1 Haul Road 13
- 4.2 Concrete Box Culverts 14
  - 4.2.1 Introduction 14
  - 4.2.2 Structure Selection 14
  - 4.2.3 Hydraulic Analysis 15
  - 4.2.4 Culvert Description 15
  - 4.2.5 Culvert Design 15

5.0 HYDROTECHNICAL ANALYSIS 16
- 5.1 Hydrological Analysis 16
- 5.2 Hydraulic Analysis 16
  - 5.2.1 Culvert Analysis (10-year Event)
  - 5.2.2 Overtopping Analysis (50-year Event)
  - 5.2.3 Gabion Armoring

6.0 FURTHER WORK 19

7.0 REFERENCES 20

APPENDICES

- A BNCC 2006 Purchase Requisitions and Items to be Addressed with Resolutions and BNCC Purchase Requisition
- B Pavement Design
- C Culvert Design
- D Hydraulics - HEC-RAS Analysis

LIST OF FIGURES

Figure **Page**

1 Key Plan 9
2 Area of Proposed Crossing Site 10
3 Oblique View of Proposed Crossing Site 11

LIST OF DRAWINGS (Provided in Volume 2 of 2)

Drawing

C-1 Title Sheet and Project Location Map
C-2 Site Plan
C-3 Typical Roadway Sections
C-4 Pavement Sections
C-5 Haul Road Plan and Profile
C-6 Haul Road/Culvert Guardrail Detail
C-7 Typical Roadway Sections-Deleted
C-8 Typical Roadway Sections-Deleted
C-9 Metal Barrier W-Beam Details
C-10 Metal Barrier Post and Blocks
C-11 Metal Barrier Components
C-12 Curved Guardrail Type B End Anchorage

D-1 Culvert Plan and Profile
D-2 Grading Plan
D-3 Gabion Armoring Detail
D-4 Gabion and Erosion Control Details

S-1 Box Culvert Layout
S-2 Box Culvert Details
S-3 Excavation and Backfill for Bridges, Walls, and CBCs
S-4 Wingwalls for Pipe or Box Culverts

ACRONYMS AND ABBREVIATIONS

asl	above sea level
bgs	below ground surface
BHP	Broken Hills Proprietary
BNCC	BHP Navajo Coal Company
CBR	California Bearing Ratio
CFR	*Code of Federal Regulations*
cfs	cubic foot (feet) per second
ESAL	Equivalent Standard Axle Load
FHWA	Federal Highway Administration
fps	foot (feet) per second
ft	foot (feet)
in.	inch(es)
lb(s)	pound(s)
MSE	Mechanically Stabilized Earth
MSHA	Mine Safety and Health Administration
MWH	MWH Americas, Inc.
NFF	National Flood Frequency
NMBR	New Mexico Board of Registration for Professional Engineers and Land Surveyors
psf	pound(s) per square foot
sq ft	square foot
URS	URS Corporation
USCS	Unified Soil Classification System

1.0 PROJECT SCOPE

1.1 INTRODUCTION

URS Corporation (URS) was retained by BHP Navajo Coal Company (BNCC) to provide professional engineering services for the revision of final design report, design drawings, and construction bid specification packages from a design proposed by URS (2006). The original URS design was based on the review of a design prepared by MWH Americas, Inc. (MWH) for permitting that consisted of an aggregate haul road, and low-flow culvert (MWH, 2004). URS' final design report is dated June 2006 and titled, Cottonwood Arroyo Crossing, BHP Navajo Coal Mine, Farmington, New Mexico (URS, 2006). Subsequent to the June 2006 design report, BNCC provided a purchase requisition to URS on May 2, 2006 to:

- Review the design previously proposed by MWH for compliance with acceptable standards of practices of the New Mexico Board of Registration for Professional Engineers and Land Surveyors (NMBR);
- Assess the availability of materials specified on the drawings and identify those with long procurement times that could impact the project schedule;
- Revise the design drawings per a list of items provided in Appendix A of this report;
- Finalize the engineering drawings for issue of bidding and construction;
- Prepare detailed material and construction specifications covering all aspects of earth, concrete, and steel construction; and
- Prepare and provide a final engineering report that contains drawings and appendices.

The June 2006 design consists of:

- A box culvert structure in the existing arroyo channel to drain runoff from the low flow storm event;
- Heavy vehicle haul roads to accommodate the frequent use of 735,000-pound (lb) haul truck and the occasional use by a 13-million-pound excavator; and
- An emergency light vehicle bridge (conceptual)

In February 2007, BNCC issued a scope of work to revise the June 2006 design per the following:

- General
    - Provide professional engineering services in accordance with acceptable practices of the State of New Mexico Board of Registration for Professional Engineers and Professional Land Surveyors.
    - Provide all supervision, labor, materials and equipment required to perform the engineering services.
- Work shall include but not limited to the following:
    - Assess the availability of the materials specified on the drawings and identify those with long procurement time that could impact the project schedule.

- Revise the engineering drawings and report with the following changes:
  - Eliminate the emergency bridge and revise the drawings accordingly.
  - Evaluate and provide an estimated cost for armoring the down stream side of the haul road at the spillway; consider the 25 year-6 hour and 50 year – 6 hour storm events.
  - Consult with Owner in selecting the armoring option and revise the drawings accordingly.
  - Update the pay item quantities.
  - Evaluate box culvert design based on changes in flow rate based on revised BNCC hydrologic model.
  - Finalize the engineering drawings.
  - If necessary update/modify the detailed material and construction specifications covering all aspects of earth, concrete and steel construction.

- Final Engineering Report
  - Provide updated/modified sections for the engineering report, and update/modified drawings and appendices.
  - Provide electronic files on a CD of all the contents in the report in PDF format and the drawings in dwg format including PDF format.

1.2 DESIGN CRITERIA

The following design criteria were established by BNCC:

- The design flow for the box culverts is 2,186 cubic feet per second (cfs) without impoundment and this is equivalent to the maximum flow generated by the 10-year, 6-hour storm event;
- The design flow for the spillway is 4,040 cfs and this is equivalent to the maximum flow generated by the 50-year, 6-hour storm event;
- A minimum 120-ft (ft)-wide crossing is required to provide a drag-line walk-road and an 80-ft heavy vehicle haul road and 40-ft regular vehicle access road;
- The design drag-line load is created by a Marion model 8750 with 116-ft outside width, 13,050,000-lb working weight, and two 16-ft by 80-ft shoes with a bearing pressure of 5,098 pounds per square foot (psf);
- The design heavy vehicle load is created by a Kress CH-220C 114-ton coal hauler with a maximum operating weight of 735,000 lbs. Each dual wheel unit has a bearing pressure of 14,700 psf on an 12.54-square-foot (sq ft) area;
- The frequency of one-way haul truck trips per week is 720 (BNCC, 2006); and

1.3 DESIGN ASSUMPTIONS

- BNCC is responsible for inspecting the haul road and associated structures for maintenance issues after each significant storm event, which is not limited to the 50-year event.

- URS provided alternatives for armoring the downstream portions of the haul road during the 25-year and 50-year, 6-hour events. URS also recommended armoring critical portions of the haul road the upstream. BNCC notified URS that they selected the 50-year, 6-hour armoring alternative in an email from Kevin Bahe on April 10, 2007 BNCC will also monitor and maintain the haul road integrity as required.
- BNCC directed that an un-compacted, 7-ft-high safety berm with 1.5H:1.0V slopes be constructed along the west side of the haul road where a 3.0-ft drop-off exists. BNCC also requested that a Mine Safety and Health Administration (MSHA)-approved double-railed guardrail be placed along the west side of the haul road where the haul road crosses the box culvert.
- BNCC directed that the haul road tie-in elevations are 5272 ft at the north and 5280 ft at the south.
- Net cut and fill materials (run-of-mine) are within 0.50 mile of the project site.

1.4 TERMS OF REFERENCE

BNCC provided a purchase requisition under contract SA# 612, Change Order #2 to URS on March 12, 2007 to conduct the following work:

Task 1 incorporates the bulk of the design revisions. The purpose of this task is to ensure that the final design package meets the Scope of Work and is in accordance with the State of New Mexico Board of Registration for Professional Engineers and Professional Land Surveyors. URS will ensure that all aspects of the design and design documentation meet these requirements to the extent that the project team will affix their professional seals to the design drawings and specifications. Task 1 is broken down in to three subtasks:

Subtask 1.1 - Drainage Scope

1. Review original construction drawings, specifications, and quantities to determine the extent of changes, affected work, and long term procurement issues, as well as, coordinate with other URS engineering disciplines.
2. Review the revised hydrologic data as provided to URS by BNCC on February 7, 2007.
3. Revise hydraulic computations to reflect necessary changes. The HEC-RAS model will be revised to reflect the elimination of the bridge and to modify discharge values as needed. The culvert computations will be revised to reflect a shorter length to reflect the smaller roadway footprint. Based on the hydrologic data changes, the culvert sizing will be re-evaluated to determine if the size can be decreased or a barrel(s) can be eliminated.
4. Revise roadway and structural drawings with respect to hydrology and update appropriate material quantities
5. Respond to and incorporate any client comments to construction documents.

Subtask 1.1.1 – Erosion Protection Alternatives Analysis and Drawings

1. Perform erosion protection calculations for two options:
    a. Armoring Downstream Face of Haul Road for the 25-year event
    b. Armoring Downstream Face of Haul Road for the 50-year event
2. Develop cost estimates for the two options for armoring of the haul road downstream face.
3. Revise the drainage drawings to reflect the updated roadway footprint and embankment grading and selected armoring alternative.

Subtask 1.2 – Structural Scope

1. Review original construction drawings, specifications and quantities to determine extent of changes, affected work, and long term procurement issues as well as, coordinate with other disciplines.
2. Revise structural drawings to meet drainage hydraulic and soil grading requirements including CAD and detail check revisions. It is anticipated that culvert lengths and end treatments, and the number of culvert barrels may change. Integrate review of roadway and hydrology drawings with respect to structure and update appropriate material quantities.
3. Respond to and incorporate any client comments to construction documents.

Subtask 1.3 – Ramps and Haul Road Scope

1. Review original construction drawings, specifications and quantities to determine extent of changes, affected work, and long term procurement issues, as well as, coordinate with other disciplines.
2. Revise haul road drawings to meet drainage group hydraulic and soil grading requirements including CAD and detail check revisions.
3. Respond to and incorporate any client comments to construction documents

Task 2 This task includes revising and resealing the design report to incorporate the above design revisions. This task also includes project management and internal URS Independent Technical Review on all calculations, plan sheets, report, and cost estimates. URS will provide BHP with two hard copies of this report, drawings, and appendices. URS will provide electronic files of the report, drawings, and appendices on a CD in PDF format. In addition, the drawing will also be provided in AutoCad format.

Both the May 2, 2006 and the March 12, 2007 Change Orders are presented in Appendix A.

2.0 SITE DESCRIPTION

The site is located at approximate elevation 5,260-ft above sea level (asl) on the Cottonwood Arroyo approximately 24 miles southwest of Farmington, New Mexico and within the BNCC mine permit area on the Navajo Reservation as shown on Figure 1 – Key Plan (MWH, 2004).

Cottonwood Arroyo is a major sand-bed ephemeral drainage with a watershed area of approximately 77 square miles (Figure 2 – Area of Proposed Crossing Site). Approximately 14 percent (%) of the watershed lies within the permit area. This drainage area includes approximately 12.4 square miles of the adjacent Chinde Wash drainage to the north that is diverted into Cottonwood Arroyo by the Navajo Indian Irrigation Project's Ojo Amarillo canal into the Cottonwood drainage. About 49% of the watershed is covered by badlands, direct contributors to the high runoff/discharge, flow intensities and sediment load observed in this drainage (MWH, 2004).

Typically, the channel at the crossing site will experience a rapid increase in discharge from a dry channel to peak flow, followed by a recession to a low discharge in a matter of several hours. These conditions can result in the transport of large of amounts of sediment and cause extensive change to the shape of the channel during just one event. The dynamic character of the channel is clearly evidenced by the traces of previously abandoned channels along the edges of the current Cottonwood Arroyo channel (MWH, 2004).

Sources of strong durable rock for riprap and channel armor protection are limited in the immediate vicinity of the site and this is an important cost consideration for the project. The best locally available material for riprap and channel armor is fairly durable, compact, cemented sandstone from an old BNCC pit, but that this material is available in only very limited quantities. Durable rounded river rock, sand, gravel, and good-quality concrete aggregate is available from sources in Farmington, New Mexico, and Durango, Colorado (MWH, 2004); however, the river rock D_{50} dimensions do not meet the wire enclosed Class A rip rap specifications. Therefore, river rock gabions, gabion mats and Reno mattresses will be utilized for all erosion protection structures.

Progressive overburden stripping, coal extraction and land reclamation activities are ongoing immediately north of the site at the Dixon Pit. The ground surface slopes gently from the mining areas at approximate elevation 5,280-ft above sea level (asl), across the broad floodplain of the Arroyo at approximate elevation 5,263-ft asl and into the incised main channel with thalweg invert at approximate elevation 5,258-ft asl. The ground surface then rises rapidly to the south to reach a plateau elevation of approximately 5,300-ft asl. At the crossing site, the topography is gently rolling (see Figure 3 – Oblique View of Proposed Crossing Site) (MWH, 2004).

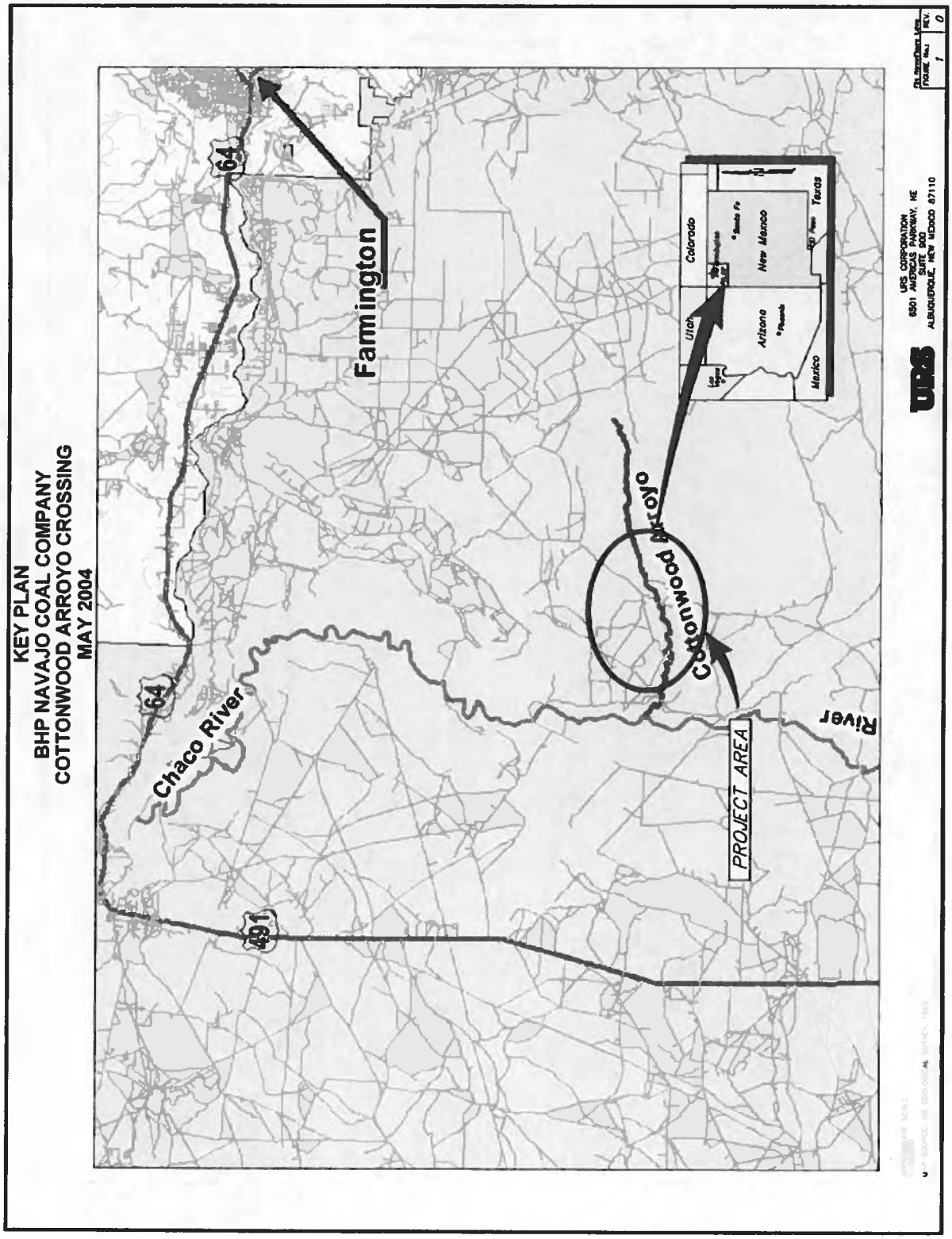

Figure 1 – Key Plan

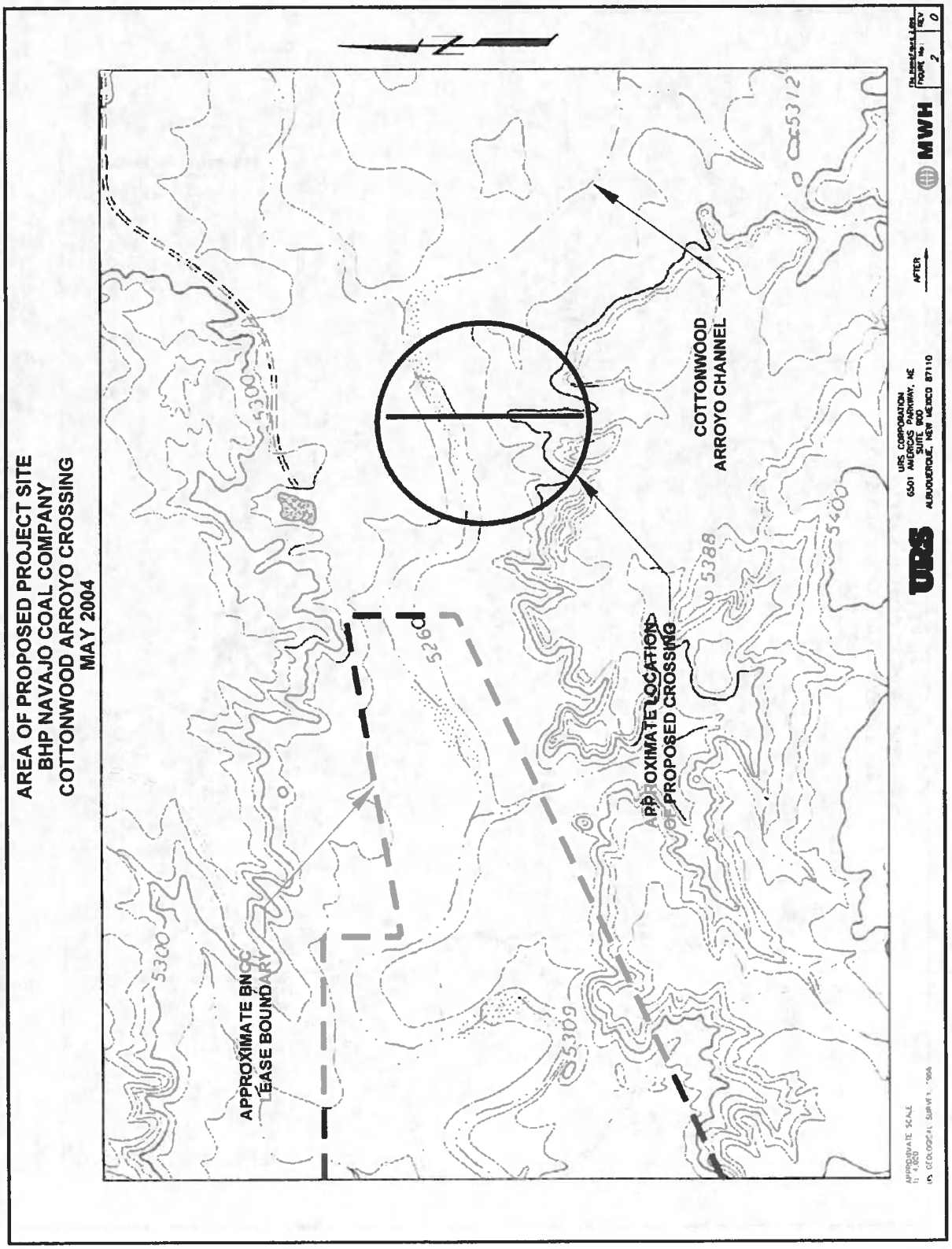

Figure 2 – Area of Proposed Crossing Site

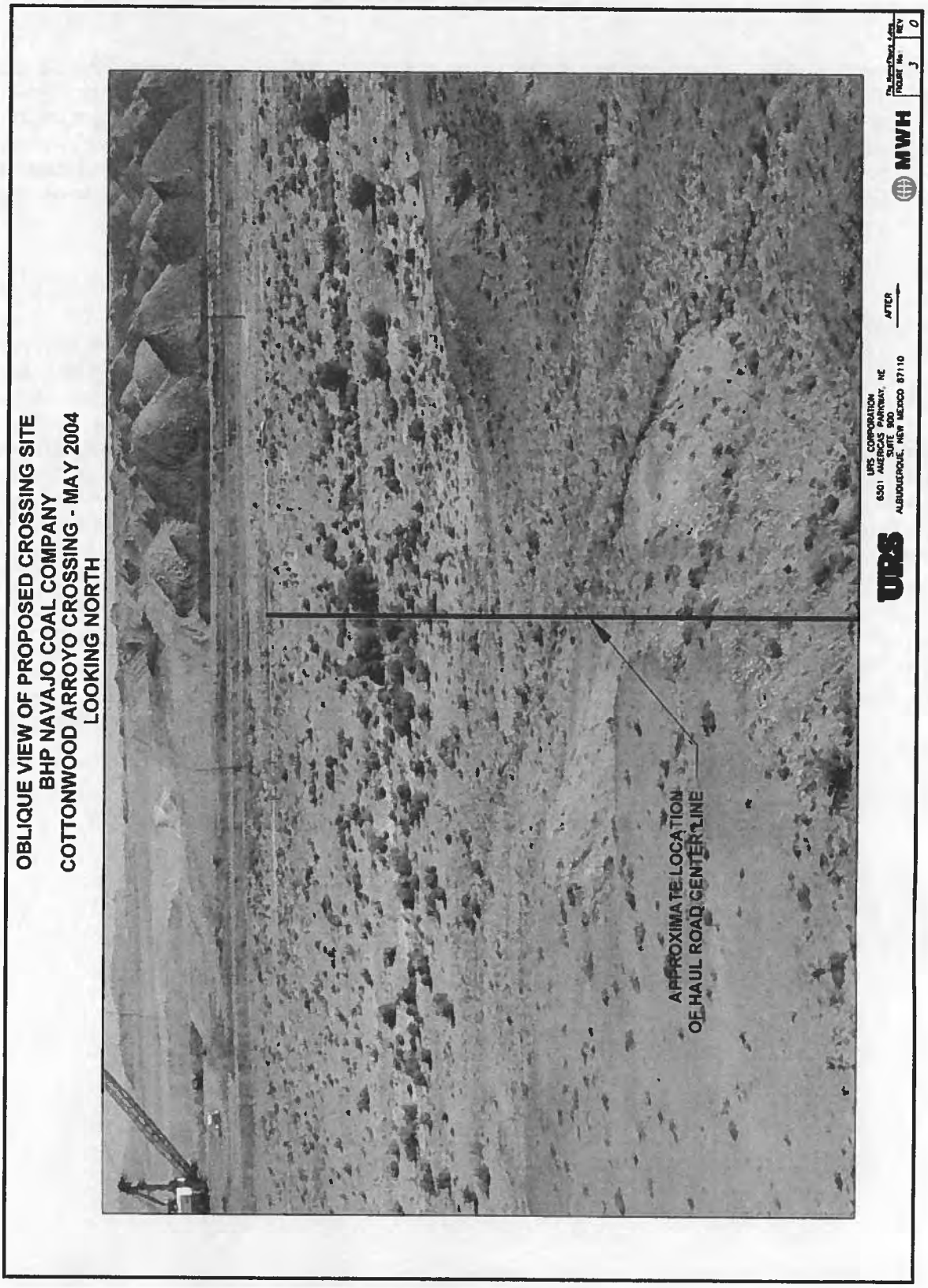

Figure 3 – Oblique View of Proposed Crossing Site

3.0 SITE INVESTIGATIONS

MWH conducted a geotechnical site investigation, which included three soil borings and six test pits. Geotechnical testing was performed by GEOMAT, Inc, of Farmington, New Mexico for in-situ density and moisture, Unified Soil Classification System (USCS) classification, gradations, compaction characteristics, and direct shear. Run-of-mine materials were tested for R-value. Soil boring and test pit locations are shown on Drawing C-2. Details of the geotechnical investigation are presented in MWH's permitting design report along with summary tables, soil boring and test pit logs, and geotechnical laboratory results (MWH, 2004).

3.1 SUMMARY OF MWH GEOTECHNICAL INVESTIGATION RESULTS

Generally, the subsurface conditions were investigated from a floodplain elevation of 5264 ft asl with a poorly graded, medium dense, dry sand being encountered to an approximate elevation of 5257-ft-asl. Underlying the poorly graded sand is a well-graded, medium dense, moist sand and sand with gravel that extends to an approximately elevation of 5243-ft asl. Groundwater was encountered at approximately 20-ft below ground surface (bgs) in all three soil borings (approximately 5243-ft asl). North of the arroyo channel, soft and plastic clay was encountered from approximately 19 to 24-ft bgs (5242 to 5239-ft asl). However, this soft clay material was not encountered in DH-3 south of the channel. On both sides of the channel and at an elevation of approximately 5239-ft asl, a hard, dry siltstone was encountered. The siltstone has seams of black coal up to 6 in. thick and it extends to at least an elevation of 5226-ft asl (MWH, 2004).

4.0 CROSSING DESIGN

The crossing design is presented on 12 civil drawings (C-1 through C-12), four hydrology and hydraulics drawings (D1 through D-4) and four structural drawings (S-1 through S-4).

4.1 HAUL ROAD

A 120-ft-wide haul road is required across Cottonwood Arroyo to carry a Marion 8750 dragline weighing 13,050,000 lbs south to the Area IV - North Development and to carry Kress CH-220C haul trucks with loaded weight of 735,000 lbs, north to the coal blending area. The haul road was designed to withstand one-way truck traffic frequency of 720 trips per week and routine maintenance would be performed by BNCC. The haul road surface profile is constrained by:

- The elevation of existing haul roads on the north side of the Arroyo;
- The elevation of proposed haul roads on the south side of the Arroyo;
- Vertical curvature and gradient constraints on operating equipment;
- Minimum cover over proposed box culvert sections; and
- The required spillway's invert elevation.

A proposed profile has been developed that consists of a series of three vertical curves with lengths of 120 ft, 300 ft, and 100 ft and maximum 4% grades. The haul road drops from 5272 ft asl to the north into a sag curve. The low point of the crossing acts as a proposed low-level spillway crossing of the existing floodplain on the north side of the Arroyo and rises above a proposed box culvert crossing of the existing channel reaching elevation 5280 ft asl on the south side of the Arroyo. The minimum cover area of the box culvert is 4-ft The haul road will be divided into an 80-ft-wide haul truck traffic-way to the west (downstream of centerline) and a 40-ft-wide regular vehicle traffic-way to the east (upstream of centerline). The road surface will be crowned between the two traffic-ways and will be graded with outward cross slopes of 2.5% in each direction to facilitate rapid drainage during rainfall and snowmelt events. In addition, a downstream earthen safety berm has been added where the elevation differential between the edge of the road is 3-ft or greater above the native ground surface. In the constricted area along the culvert, an MSHA approved guardrail will be constructed instead of an earthen berm. Typical roadway sections are shown on Drawing C-3. In the 2006 design, Drawings C8 and C9 presented roadway sections though the proposed emergency access road, which is no longer required. Therefore, current equivalent drawings C-7 and C-8 have been deleted from this design as indicated on the cover sheet. Due to the curvature of the haul road and presence of protected 2H:1V drop-offs, and the potential for night usage, URS recommends that the posted speed limit of the haul road be 30 miles per hour. Because the roadway will be subject to over-topping during major storm events, URS also recommends signage warning drivers not to cross arroyo when water is flowing over the road. Details of the surfacing, base and sub-base for the haul road are indicated on Drawing C-4. The plan and profile for the haul road is shown on Drawing C-5. Guardrail location plan view is shown on Drawing C-6. Drawings C9 through C-12 show metal barrier and guardrail details. Pavement design calculations are presented as Appendix B.

BNCC requires a pavement design to handle 25 years of extremely heavy mining haul road trucks on the order of 368,500 lbs/axle load, for a significant number of axle passes over the life of the project. This would correspond to over 20,000,000 Equivalent Standard Axle Loads

(ESALs) in the standard 18 kip axle load design method; therefore, geogrid is recommended to prevent a punching failure of the road pavement cross-section. At the request of URS, BNCC provided traffic loadings for the period 2007 through 2031; therefore, the 25-year design life for the haul road pavement design was selected. URS reviewed the previously furnished pavement section developed by MWH, which was:

- 6-in. Wearing course (California Bearing Ratio [CBR] 80)
- 10-in. Base course (CBR 80)
- 42-in. Alluvial sand (sub-base course) (CBR 80)
- Sub-grade preparation (CBR 3) (MWH, 2004)

URS determined that the above pavement section was inadequate based on the wheel loads for the mine haul trucks (the tire pressure) and the 25-year expected traffic loadings. Based on the pavement design calculations in Appendix B, the required un-reinforced (no geogrid) pavement section would need to be 82 in. Therefore, URS has prepared the pavement section illustrated in Appendix B and the contract drawings and it is expected that the reduction in the sub-base course thickness, and the lower CBR requirement (40 versus 80), will enable BNCC to save contract dollars in the final bid and construction of the haul road. Furthermore, the recommended pavement section will have significant constructability benefits and, because of the sub-grade improvement reinforcement to be provided, is expected to provide a full 25-year design life.

4.2 CONCRETE BOX CULVERTS

4.2.1 Introduction

The MWH Permitting Design Report had developed the concept for this project whereby the 10% annual chance event flows of the Cottonwood Arroyo would be carried through an eight-barrel, 8-ft by 8-ft pre-cast concrete box culvert, located in the natural channel beneath the crossing. Based on the revised flow data provided by BNCC and results obtained from analyses performed by URS, it was determined that a four-barrel box culvert would be sufficient to contain a 10% annual chance event. Larger design storm events would overtop the haul road, and the haul road would then essentially act as a spillway. The culvert crosses beneath the haul road (MWH, 2004).

4.2.2 Structure Selection

Culverts are used to convey water beneath a roadway. Box shapes are typically used to accommodate large flows without excessive vertical headroom requirements. Box culverts have been proposed for this project because of their low profile and their high vertical load carrying capacity.

Box culverts may be either cast in place or pre-cast. Due to the distance of the site from the nearest Redi-Mix plant, pre-cast concrete box culverts are expected to be more cost effective. The pre-cast units could be manufactured at a location such as the Albuquerque Rinker Materials - Concrete Pipe Division (Bernalillo), New Mexico. As an example, details of the Rinker MEGA Box Culvert are presented in Appendix C.

Alternative culvert concepts may be available, and we recommend providing flexibility in the design drawings for the Contractor to bid on creative alternatives. The alternatives would be

constrained to maintain cover and hydraulic design parameters. One alternative that may be practical is the use of multiple pre-cast concrete arch culverts.

4.2.3 Hydraulic Analysis

Refer to Section 5.2 of this report for discussion on the culvert.

4.2.4 Culvert Description

The final hydraulic analysis shows that for the design flow, a four-barrel, 8-ft by 8-ft concrete box culvert is required. The culvert is aligned approximately parallel with the natural channel and is approximately 187-ft long with a slope of 0.24%. The invert elevation is approximately coincident with the bottom of the existing Cottonwood Arroyo channel, and a 4-ft minimum cover was used during the design of the vertical roadway profile of the haul road. The ends of the box culvert are skewed 30 degrees to improve the hydraulic efficiency of the culvert. Because the skew angle is too great for the pre-caster to fabricate, a cast in place concrete headwall is proposed.

Inlet/outlet concrete aprons will be incorporated into the box culvert structure to control scour. Gabion mattresses are proposed at the inlet and outlet to control erosion and scour. Gabion mattresses, 18-inch thick, will extend up the embankment on the inlet side to the Elevation of 5264 for the 10-yr storm event. 18-inch gabion mattresses are proposed on the outlet structure up to Elevation 5264 for scour control.

The depth of sub-excavation and replacement of foundation material to develop suitable bearing for the culvert structure will need to be determined during construction since test pit excavation and drilling in the stream channel was not possible during the investigation phase. It is anticipated that 1 or 2-ft of sub-excavation and backfill with compacted native sand will be all that is required.

4.2.5 Culvert Design

The culvert design will be robust due to the very large vehicle loads imposed on top of the boxes. The design vehicles consist of a dragline and haul truck. Design information regarding vehicle geometry, and loads can be found in Appendix C. In the MWH Permitting Design Report, design vehicle loads were reduced to 80% for the dragline and almost 60% for the haul truck. After consultation with BNCC, URS was unable to determine the justification for allowing such a reduction, so final design will use the total vehicle weights. This will result in a substantial increase in the box section.

URS approached Rinker Materials - Concrete Pipe Division to provide preliminary design information for the pre-cast reinforced concrete box (RCB) culverts. Their preliminary design is provided in Appendix C and consists of walls and slabs having a thickness of 8 – 10-inches. The culvert design details are presented in Drawings S-1 through S-4.

5.0 HYDROTECHNICAL ANALYSIS

5.1 HYDROLOGICAL ANALYSIS

For the proposed Cottonwood Arroyo crossing, BNCC had provided MWH preliminary discharge values. These values were based on a BNCC hydrologic model generated in 2003, in the software SEDCAD 4 and were used for the permitting process (MWH, 2004). SEDCAD 4 is the regulatory software approved by the Office of Surface Mining. Since 2003, BNCC had updated their hydrologic model to represent the ever changing mine topography. As a result of the BNCC update, there were differences between the 2003 and 2007 calculated peak discharge values for each storm. The new 2007 peak flow values were 2186 cfs, 3263 cfs, and 4040 cfs for the 10%, 4%, and 2% annual chance storm events, respectively. These values reflected a 23% decrease from the values reported in the previous design report.

URS completed a general overview of the BNCC hydrology. The review was performed as a check of the reasonableness of the BNCC discharge values. URS evaluated the post mine watershed area (77 square miles) and calculated a peak discharge using the National Flood Frequency (NFF). The equations from NFF for New Mexico's Northwest Plateau are the following:

- $Q_{10} = 3.06 \times 10^2 A^{0.46}$, where A is in square miles
- $Q_{25} = 4.86 \times 10^2 A^{0.45}$, where A is in square miles
- $Q_{50} = 6.54 \times 10^2 A^{0.45}$, where A is in square miles

The values calculated by the NFF program were 2260 cfs, 3430 cfs, and 4620 cfs for the 10%, 4%, and 2% annual chance storm events, respectively. The values obtained from the NFF program appeared reasonable as a check of the SEDCAD 4 values.

Based on the precedent set by BNCC to provide MWH with the peak discharge values from the BNCC model for the permitting document and preliminary modeling, URS continued to use peak discharge values generated by BNCC. Therefore, peak discharge values of 2186 cfs, 3263 cfs, and 4040 cfs were used for the 10%, 4%, and 2% annual chance storm events were used for hydraulic calculations.

5.2 HYDRAULIC ANALYSIS

The scope of this study is to determine the number of 8-ft by 8-ft concrete box culverts necessary to pass the revised 10-year flood event without overtopping the haul road. Utilizing the aforementioned scenario, the overtopping flow velocities, as a result of the revised 50-year flood event, will also be determined. The U.S. Army Corps of Engineers' one-dimensional hydraulic model, HEC-RAS, was used for the analysis. Of the two models developed during the analysis, one model was used to simulate the overall hydraulics of the channel/culvert, while the second one simulated the hydraulics of the overtopping flow.

5.2.1 Culvert Analysis (10-year Event)

The revised peak flow for the 10-year flood event is approximately 2,186 cfs, which is lower than the original estimate of 2,936 cfs. Utilizing the revised flow rate, it has been determined that the 10-year flood event can be passed through four 8-ft by 8-ft concrete box culverts without overtopping the haul road. The maximum water surface elevation, upstream of the culverts, is

expected to be approximately 5,265.4-ft asl. The upstream culvert inverts and crowns have been modeled at elevations 5,257.6-ft asl and 5265.7-ft asl, respectively. Therefore, the flow depth at the upstream end of the culvert is expected to be approximately 7.8-ft, leaving approximately 1.2-ft of freeboard between the maximum water surface elevation and the lowest crown elevation of the haul road (El. 5,266.7-ft asl). As flow passes through the culverts, the HEC-RAS model indicates possible critical depth near the culvert exit. Therefore, a hydraulic jump may occur either in the downstream end of the culvert or on the downstream apron. Additionally, the exit velocities from the culvert are expected to approach 13 ft/s with a flow depth of approximately 5-ft. Consequently, scour protection downstream of the culvert must be provided. The culvert plan and profile and grading plan are presented as drawings D-1 and D-2, respectively. Gabion armoring details are presented on Drawings D-3 and D-4.

5.2.2 Overtopping Analysis (50-year Event)

The revised peak flow for the 50-year flood event is approximately 4,040 cfs, which is lower than the original estimate of 5,173 cfs. Four 8-ft by 8-ft concrete box culverts will not be able to pass the 50-year flood event without overtopping the haul road. The culverts are expected to pass approximately 2,731 cfs; therefore, approximately 1,309 cfs is expected to overtop the haul road. The maximum water surface elevation, upstream of the culverts and haul road, will be approximately 5,268.4-ft asl. The upstream edge of the haul road traffic lane has an elevation of approximately 5,265.7-ft asl, therefore, approximately 2.8-ft of overtopping is expected at this location. Flow velocities are expected to be relatively low (i.e. less than 2 ft/s) on the upstream embankment face and the haul road traffic lane, as flow approaches the crown of the haul road. The overtopping flow is expected to pass through critical depth at the crown, before transitioning to supercritical flow over the haul road truck haul lane. The overtopping flow on the haul road truck lane and the downstream embankment is controlled by the tailwater from the downstream channel, which reaches the upper section of the embankment face. The flow velocities are expected to be approximately 5.2 ft/s near the haul road crown and increase to approximately 8.2 ft/s at the downstream edge of the road. The flow velocity on the downstream embankment face is expected to decrease as the overtopping flow interacts with the downstream channel tailwater.

5.2.3 Gabion Armoring

The haul road is to be armored using gabions to protect the road during the 50 year design storm. Fifty year protection plus one foot of freeboard will be provided. Maccaferri gabions, gabion mat and Reno mattress will be used. All Reno mattresses are 9-in thick. Gabion mat and gabion blocks are 18-in thick. Filter cloth will be required around all armoring. The gabion layout is shown on plan sheet D-3. Details are shown on plan sheet D-4 including the sections described below.

<u>East/upstream side of haul road</u>
An 8-ft width of Reno mattress with an additional 3-ft cut off wall, Section B on the detail sheet, D-4, will extend from Station 0+10 to 2+30 with a 3-ft cut off wall. A 14-ft wide plus 3-ft cut off wall, Section A, extends from 2+30 to 4+47. Reno mattress extends from Station 4+47 to 5+62, Section F, to the culvert. Section F varies from 18-ft to 30-ft in width with a 5-ft cut off wall.

<u>West/downstream side of haul road</u>
An 8-ft width of Reno mattress, with 3-ft cut off wall, identical to Section B on the east side, extends from Station 0+11 to 3+00. A stepped gabion structure consisting of gabions and gabion mat, with a 10-ft deep concrete cut off wall, labeled Sections C and G, extends from

Station 3+00 to 4+00. The roadway grade begins to rise from existing ground at about Station 2+50 and extends up at 3 percent. Thus the west side of the road is approximately 2-ft to 6-ft above existing ground, creating the need for the stepped structure.

APPENDIX B

PAVEMENT DESIGN

APPENDIX B

PAVEMENT DESIGN – MINING HAUL ROAD BNCC COTTONWOOD ARROYO CROSSING

Project Description

BNCC requires a pavement design to handle 25 years of extremely heavy mining haul road trucks on the order of 368,500 lbs/axle load, for a significant number of axle passes over the 25-year life of the project. This would correspond to over 20,000,000 ESALs in the standard 18 kip axle load design method; therefore, the use of geogrids is recommended to prevent punching failure in the road pavement cross-section.

DESIGNER	CLIENT
URS Corporation	
One Park Square, Suite 900	BNCC
6501 Americas Parkway NE	300 West Arrington
Albuquerque, NM 87110, US	Farmington, NM 87416, US
ATTN: Donald T. Lopez, PE, URS New Mexico	ATTN: Leonard Raymond
Phone: (505) 855-7500	Phone: (505) 598-4209
FAX: (505) 855-7555	FAX: (505) 598-3361
don_lopez@urscorp.com	Leonard.L.R.Raymond@bhpbilliton.com

SUBGRADE IMPROVEMENT CALCULATION

Design Methodology

The aggregate fill thicknesses determined in the Results section below are based on the methodology prescribed in Giroud and Han (2004). The design method is intended for the calculation of the required unbound aggregate layer thickness for unpaved roads (such as haul roads) constructed on weak sub-grades.

Validation of the thicknesses achieved for pavement sections reinforced with Tensar biaxial geogrids using this method were achieved through calibration with several sets of test data, including the results obtained from work undertaken in the pavement test facility at North Carolina State University (Gabr, 2001).

Design Parameters

a) Trafficking Requirements

Property	Value
Axle Load (kips)	368.5
Tire Pressure (psi)	102
Axle Passes (per week)	See Pages B-3 through B-5
Maximum Rut Depth (in.)	1.5

b) Pavement Soil Properties

Property	Value
Aggregate Fill CBR (%)	40
Field Subgrade CBR (%)	3

c) Geosynthetic Properties

Parameter	BX1200
Geogrid Type	Integrally formed, single layer
Rib Shape	Rectangular/square
Rib Thickness (in.)	0.05
Aperture stability modulus (m-N/degree)	0.65
Junction Efficiency (%)	90
Aperture dimensions (in.) -Machine direction -Cross machine	 1.0 1.3
Thickness adjustment factor	1.0

AGGREGATE FILL THICKNESS SAVINGS

Geosynthetic	Aggregate Fill Thickness (in.)		Aggregate Fill Thickness Savings (in.)	
	Calculated	Required	(in.)	(%)
Unreinforced	102	82	N/A	N/A
Tensar BX1100	67.7	68	34	33
Tensar BX1200	45.2	46	56	55

COTTONWOOD CROSSING TRUCK FREQUENCY

---- Forwarded by Steve Raugust/Albuquerque/URSCorp on 05/17/2006 03:29 PM ----

"Raymond, Leonard LR" <Leonard.LR.Raymond@burlingtonnorthern.com>
05/17/2006 03:28 PM

To "Steve_Raugust (E-mail)" <Steve_Raugust@URSCorp.com>
cc "Hoskie, Ben BN" <Ben.BN.Hoskie@burlingtonnorthern.com>
Subject Cottonwood Crossing truck frequency

Steve: Attach is a spreadsheet showing the frequency of the trucks for 20, 15 and 10 shifts per week work schedule. The trucks will most likely be on 15 shifts per week work schedule but on some occasions may run 20 shifts per week depending on production requirements.

L. Raymond

<<CWC Frequency2 051706.xls>>

This message and any attached files may contain information that is confidential and/or subject of legal privilege intended only for use by the intended recipient. If you are not the intended recipient or the person responsible for delivering the message to the intended recipient, be advised that you have received this message in error and that any dissemination, copying or use of this message or attachment is strictly forbidden, as is the disclosure of the information therein. If you have received this message in error please notify the sender immediately and delete the message.

[attachment "CWC Frequency2 051706.xls" deleted by Michele Anderson/Albuquerque/URSCorp]

TRUCK LOADS PER SHIFT FOR 20, 15 AND 10 SHIFTS PER WEEK

	Avg	Min	Max	FY2007	FY2008	FY2009	FY2010	FY2011	FY2012	FY2013	FY2014	FY2015
Total Tons Mined	8,791	7,753	9,567	8,909	8,976	8,940	9,313	8,602	8,908	8,875	9,135	8,850
A4 Tons Mined	5,708	-	9,373	-	-	-	-	546	2,353	4,928	5,126	5,001
20 Shifts/Wk	858	550	1,000							550	550	550
15 Shifts/Wk	643	413	750							413	413	413
10 Shifts/Wk	429	275	500							275	275	275
Freq for 20 Shifts/Wk	36	29	39							37	39	38
Freq for 15 Shifts/Wk	48	39	52							50	52	51
Freq for 10 Shifts/Wk	72	58	78							75	78	76

All tons from A3 & A2

Freq is number of trucks per shift, max payload of 240 tons loaded one way.
Tons Mined is from FY07 LR mine plan at high burn.
A4 tons mined are the tons hauled over the Cottonwood Crossing

FY2016	FY2017	FY2018	FY2019	FY2020	FY2021	FY2022	FY2023	FY2024	FY2025	FY2026	FY2027	FY2028	FY2029	FY2030	FY2031
8,428	8,601	8,658	9,567	8,319	8,928	8,760	9,373	8,887	8,384	8,737	9,087	9,094	8,496	7,753	8,189
4,543	4,290	4,890	7,014	8,319	8,928	8,760	9,373	8,887	8,384	8,737	9,087	9,094	8,496	7,753	8,189
550	550	550	1,000	1,000	1,000	1,000	1,000	1,000	1,000	1,000	1,000	1,000	1,000	1,000	1,000
413	413	413	750	750	750	750	750	750	750	750	750	750	750	750	750
275	275	275	500	500	500	500	500	500	500	500	500	500	500	500	500
34	32	37	29	35	37	36	39	37	35	36	38	38	35	32	34
46	43	49	39	46	50	49	52	49	47	49	50	51	47	43	45
69	65	74	58	69	74	73	78	74	70	73	76	76	71	65	68

EQUIPMENT DESIGN LOAD DATA -BNCC OPERATIONS

DRESSER
Construction & Mining Equipment

DRESSER INDUSTRIES, INC. • MARION DIVISION
MACHINE SPECIFICATIONS

Model: 8750 WALKING DRAGLINE

Description: Ward Leonard — Static Control — Independent Propel

NAVAJO

KEY #7

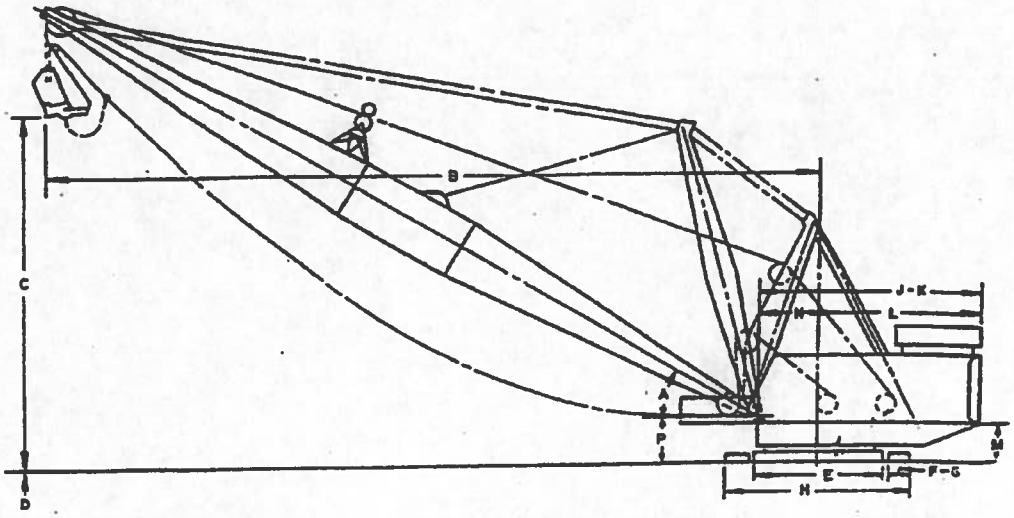

WORKING RANGES

Boom Length	335'-0"
Boom Point Sheave, Pitch Diameter	90"
A - Boom Angle, Approx.	32.5°
B - Dumping Radius	310'-0"
C - Dumping Height	123'-0"
D - Depth	150'-0"
Maximum Allowable Load, lbs.	571,000
Hoist Drum, Pitch Dia.	132"
Hoist Ropes, Four, Dia. Each	3-1/4"
Drag Drum, Pitch Dia.	132"
Drag Rope, Four, Dia. Each	3-1/4"

BASE

E - Outside Diameter - Nominal	80'-0"
Bearing Area - Effective, sq. ft.	5040
Bearing Pressure, psi	18.03
Rail Circle - Mean Dia.	53'-0"
Circle Rollers - Mean Dia.	16"
Main Swing Gear - Pitch Dia., Approx.	45'-0"

WALKING TRACTION

F - Width of Shoe	16'-0"
G - Length of Shoe	80'-0"
H - Width Over Both Shoes	116'-0"
Bearing Area of Both Shoes, sq. ft.	2560
Bearing Pressure @ 80% of Working Weight, psi	28.3
Length of Step - Approx.	6'-2"

ROTATING FRAME

J - Width @ Herr End	80'-0"
K - Length	109'-0"
Depth Sill Members	144"
L - Clearance Radius - Rear End	77'-0"
M - Clearance Under Frame	15'-10"
N - Center Rotation to Boom Foot	24'-0"
P - Ground to Boom Foot	22'-0"

ELECTRICAL EQUIPMENT

Hoist Motors, Eight, 1300 hp each @ 475 V, Total hp	10400
Drag Motors, Six, 1300 hp each @ 475 V, Total hp	7800
Swing Motors, Six, 1045 hp each @ 475 V, Total hp	6270
Propel Motors, Four, 800 hp each @ 475 V, Total hp	3200
AC Driving Motors, Total hp	13000

WEIGHTS

Domestic Shipping Weight (Inc. Bucket), lbs.	11,450,000
Working Weight, lbs.	13,850,000
Ballast (Furnished by Purchaser), lbs.	1,800,000

Shipping Weight Subject to 5% Variation.

Patents Pending
Printed in U.S.A.

The Company reserves the right to improve or change the design of its products and specifications thereof and the Company shall incur no liability thereby or any obligations to install such improvements on products previously sold.

Tensar INTERNATIONAL

Kenneth P. Akins, Jr., P.E.
Manager of Consulting Engineering

5883 Glenridge Drive
Suite 200
Atlanta, GA 30328
Tel. 404•214•5322
Fax. 404•250•9185
email:kakins@tensarcorp.com

May 2, 2007

URS Corporation
6501 Americas Parkway, NE
Suite 900
Alberquerque, NM 87110-5311

Atten: Mr. Samrat Mohanty
Mining Engineer

VIA E-MAIL: Samrat_Mohanty@ URScorp.com

Re: BHP Navajo Mine Haul Road

Mr. Mohanty:

Thank you for the opportunity to assist you on the Haul Road for the BHP Navajo Mine. We have considered the proposed section provided in your e-mail of April 26, 2007. Vehicle information and loads were supplied previously. Our evaluation included three basic considerations:

- Section geometry
- Layered elastic analysis
- Damage model

Last year, URS developed a proposed section based on the US Bureau of Mines approach by Kaufman. As an alternative design procedure to establish a basic geometry, Tensar considered the British Ports Design method. The British Ports method provides material equivalencies for CBR=80. We have considered the effect of a CBR of 40 rather than 80 using the Kaufman curves. The increase can be overcome by the geogrid reinforcement. The section in the April 26 e-mail is similar to that developed from the two design methods. The URS method last year considered a thicker but lower quality base. The British Ports method considers a capping and subbase layers now addressed by the prepared subgrade layer (Calculation Sheet attached).

We performed a layered elastic analysis to determine the vertical strain at the top of each layer. In all cases, the strain was less than recommended 2000 μ-strain (Analysis attached). Minor variations and rather thicknesses of vary similar layers will not appreciably affect strains.

URS Corporation
BHP Navajo Mine Haul Road

May 2, 2007
Page 2 of 2

We then evaluated the damage from repetitive loads to determine the layers at greatest risk to aid in the selection of geogrid placement to protect those layers. The SpectraPave analysis was set to model the four aggregate layers and subgrade. Layers limiting performance were the first subbase layer and subgrade, thus grid would be of most benefit if placed above those layers (Analysis attached).

Based on our evaluation and our discussions, we recommend that he two layers of BX 1200 be placed 12 inches above the position currently show, or a high as possible in the subbase consistent with constructability requirements, and at the bottom of the subbase, directly on the prepared subgrade.

By specific request, we have included an earlier index analysis for bearing capacity, modified for current loading. The bearing capacity is insensitive to geogrid placement is long as it is reasonably distributed in the zone.

If you should have any questions please call (800-836-7271) or e-mail (kakins@tensarcorp.com).

Regards,
Tensar International Corporation

Kenneth P. Akins, Jr., P.E. (GA 10186)
Manager of Consulting Engineering

cc: Nicholas Reck, TIC

Attachments
- British Ports Analysis
- Layered Elastic Analyses
- Damage Model
- Index Analysis-Bearing Capacity

TENSAR

PROJECT NM Mine Haul - BHP Navajo

PROJECT NO. PAGE 1 OF 1

BY KM DATE 5/1/07 CHK

CALCULATED BY KM DATE 5/2/07 CHK

REVISIONS

BRITISH PORTS METHOD

Page 48. wheel Load = 352 kN > 300

∴ go to p. 48

250,000 passes ≈ 1000/yr 30-40 day

2,500,000 300-400 day

(240/day)(365 days/yr)(25 yrs) = 2,190,000 ~~over~~ /1.ft

250,000 → 370 mm C10 Base × 3 1,100 CBR = 80

2,500,000 → 430 mm C10 BASE × 3 = 1290 mm

Subgrade CBR = 3 -

Foundation Thickness

Capping 250 mm } pg 35.36

Subbase 150 mm

400 mm

∴ 1.1 - 1.3 m CBR = 80 51.2"

0.4 m capping & subbase 15.7"

66.9 6/21/06

1.2 m } = 47"

0.4 m } 15.7"

Approved subgrade 5/1/07

BY KD DATE 6/21/06

CHK BY DATE

ADJUST FOR CBR 40, AFTER Kaufman

Δ = 5" ∴ 52" Total

Tensar Earth Technologies, Inc.

Pavement Situation At Start of Phase 1 of 1

Method: Distinct Phase Calculation Without Adjustment For Incremental Damage

Design Name: Tensar BHP Mine Haul Section

Pavement Description: Changed 18" Subbase to lower position, to provide greater overlying protection to the thicker layer, as the grid will offer less support to the layer from the bottom up. The 12" Subbase Layer will however benefit more from the grid.

Detailed view for axle type: BHP Mine Haul Truck

Total Capacity for All Phases is 25 thousand

Critical layer for this phase and axle: Layer 5

Phase starts in year 0 and ends in year 0.25

Note: Damages & critical parameters shown are for this axle type only.

Thickness = 6 Inches; Wearing Course Stiffness = 600 MPa; Poisson = 0.35; Criterion: BC Granular Materials Cat A Cohesion = 9.17 psi; Angle of Friction = 54.2	Shear Safety Factor: 8.66 Position: Between Loads/Middle of Layer Axle Capacity: >100 million (Effective: > 100 million) Cum. Damage, Phase Start to End: < 0.01 to < 0.01
Thickness = 12 Inches; Course Crushed Rock Base Course Stiffness = 600 MPa; Poisson = 0.35; Criterion: SG 20mm Rut, Cat A No special material properties needed	Vertical Compressive Strain: 643 Microstrain Position: Load Centreline/Top of Layer Axle Capacity: >100 million (Effective: > 100 million) Cum. Damage, Phase Start to End: < 0.01 to < 0.01
Thickness = 12 Inches; Subbase Course Stiffness = 400 MPa; Poisson = 0.35; Criterion: SG 20mm Rut, Cat A No special material properties needed	Vertical Compressive Strain: 772 Microstrain Position: Load Centreline/Top of Layer Axle Capacity: 26.53 million (Effective: 26.53 million) Cum. Damage, Phase Start to End: < 0.01 to < 0.01
Thickness = 18 Inches; Selected Subbase Course Stiffness = 400 MPa; Poisson = 0.35; Criterion: SG 20mm Rut, Cat A No special material properties needed	Vertical Compressive Strain: 539 Microstrain Position: Load Centreline/Top of Layer Axle Capacity: >100 million (Effective: > 100 million) Cum. Damage, Phase Start to End: < 0.01 to < 0.01
Thickness = Semi-Infinite; Prepared Subgrade Stiffness = 34.5 MPa; Poisson = 0.35; Criterion: SG 20mm Rut, Cat A No special material properties needed	Vertical Compressive Strain: 1548 Microstrain Position: Load Centreline/Top of Layer Axle Capacity: 25 thousand (Effective: 25 thousand) Cum. Damage, Phase Start to End: < 0.01 to > 1.0

Standard Axle Load Details:

Setup: BHP Mine Haul Truck ; Daily Count = 240; Growth Rate = 1 (%)

Description: Equivalent Tridem Wheel Axle Configuration

Pavement Notes: BX1200 to be inserted at top of subgrade and above the lower 18" subbase layer.

Tensar

BHP Mine Haul Road

Tensar Proposed Alternative - Rutting Analysis

1

Rubicon Toolbox: LET: Standard Axle Analysis / Ver: 2.6.3 / (Licenced)

SpectraPave2 – Tensar Earth Technologies, Inc.
Copyright ©1998 - 2003

Printed on 4/27/2007 11

SUBGRADE IMPROVEMENT

INPUT DATA

Axle Load =	368.5(kip)	Tire Pressure =	102(psi)
Number of Axle Passes =	1872000	Rut Depth =	1.5(in)
Field Subgrade CBR =	3 (%)	Field Subbase CBR =	40 (%)

GEOGRID PROPERTIES

	BX1100	BX1200
Geogrid Type	Integrally formed single layer	Integrally formed single layer
Rib Shape	Rectangular/Square	Rectangular/Square
Rib Thickness (in)	0.03	0.05
Aperture Stability Modulus(cm-kg/deg)	3.2	6.5
Junction Efficiency (%) (Percent of Tult)	90	90
Aperture Dimensions (Inside to inside)		
MD (in)	1.0	1.0
XMD (in)	1.3	1.3

ANALYSIS RESULTS

	Unreinforced	BX1100	BX1200
Subbase Thickness (in) =	102.0	67.7	45.2
Subbase Saving (in) =		34.3	56.8

Base Course Reinforcement

Design Methodology

The calculations contained in this section are based on the methodology prescribed in the AASHTO (1993) guide. When reference is made to the 'AASHTO (1993) Equation', the equation concerned is that given at the top of Figure 3 1 on Page II-32 of the document.

In addition to ensuring that the overall Structural Number of the pavement is at least equal to that required to carry the intended traffic load, it is also recommended to ensure that individual layers are designed in accordance with the Layered Analysis approach prescribed in Section 3.1, Part II of the AASHTO (1993) documen

Design Parameters

a) Pavement Layer Properties

Layer	Description	Elastic modulus, E (psi)	Cost ($/CY)	Layer coefficient	Drainage factor
ACC1	Wearing Course	90,000	130	0.14	N/A
ACC2	Coarse Crushed Rock Base	90,000	118	0.14	N/A
ABC	Subbase Course	50,000	43	0.14	1 0
SBC	Selected Subbase Course	50,000	30	0.14	1 0

b) Input Parameters for AASHTO (1993) Equation

Parameter	Value
Reliability (%)	95
Standard Normal Deviate	-1 645
Standard Deviation	0.49
Initial Serviceability	4.2
Terminal Serviceability	2 0
Change in Serviceability	-2.2
Subgrade Resilient Modulus (psi)	5,000

c) Input Parameters for Tensar Geogrid

Parameter	Value
Supply cost for Tensar BX1100 $/SY	2.00
Supply cost for Tensar BX1200 $/SY	3.00
TBR value for Tensar BX1100	3
TBR value for Tensar BX1200	3
Cost to install geogrid $/SY	0.25

Printed on 04-30-2007 C:\Program Files\Tensar\SpectraPave2 Version 2.1.6\hidded.rpt

This document was prepared using SpectraPave2 Version 2 17
Developed by Tensar Earth Technologies, Inc
Copyright 1998 - 2006, All Rights Reserved

Base Course Reinforcement

Results

Table 1 - Proposed Pavement Section

Layer	Thickness (in)	ai	mi	SN
ACC1	6.0	0.14	N/A	0.84
ACC2	12.0	0.14	N/A	1.68
ABC	12.0	0.14	1.0	1.68
SBC	18.0	0.14	1.0	2.52
Overall Structural Number (SN)				6.72

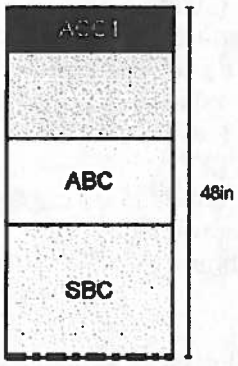

Table 2a - Calculated Trafficking Based on Overall Structural Number

Allowable traffic load (ESAL's)	Unreinforced	Reinforced	
		BX1100	BX1200
	40,308,000	120,924,000	120,924,000

Table 2b - Calculated Trafficking Based on a Layered Analysis

Layer	Underlying layer		SN of overlying layers	Allowable traffic (ESAL's)		
	Name	Modulus (psi)		Unreinforced	BX1100	BX1200
ACC2	ABC	50,000	2.52	7,881,000	23,643,000	23,643,000
ABC	SBC	50,000	4.2	240,787,000	722,361,000	722,361,000

A Layered Analysis ensures that individual layers within the pavement remain intact during its design life; full details are presented in Section 3.1.5, Part II of AASHTO (1993)

ctrlPave2 Version 2.1 Unlitled.xls

References

1. Gabr, M. (2001)
Cyclic plate loading tests on geogrid reinforced roads.
Research report to Tensar Earth Technologies Inc., N.C. State University

2. Giroud, J.P., and Han, J. (2004)
Design method for geogrid-reinforced unpaved roads:
Part 1 – Development of design method
ASCE Journal of Geotechnical and Geoenvironmental Engineering

3. Giroud, J.P., and Han, J. (2004)
Design method for geogrid-reinforced unpaved roads:
Part II – Calibration and applications
ASCE Journal of Geotechnical and Geoenvironmental Engineering

4. AASHTO (1993)
Guide for the design of pavement structures;
The American Association of State Highway and Transportation Officials

5. AASHTO (2003)
"Recommended Practice for Geosynthetic Reinforcement of the Aggregate Base Course of Flexible Pavement Structures"
The American Association of State Highway and Transportation Officials Publication PP46-01, Washington, DC

APPENDIX C

CULVERT DESIGN

Rinker MATERIALS™

Concrete Pipe Division

Reinforced Concrete MEGA Box Culvert

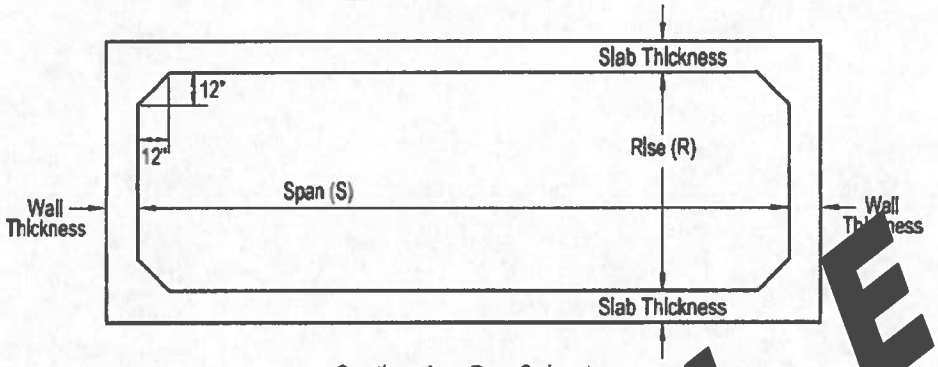

Section thru Box Culvert

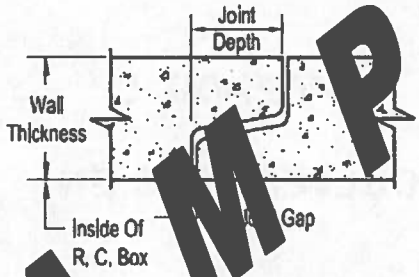

Section thru Box Joint

Span (S)	13	14	15	16	17	18	19	20	21	22	23	24
Weights (lbs.) Per Foot												
4	6000	6300	6600	6900	7700	8000	8900	9200	10200	10500	11500	11900
5	6300	6600	6900	7200	8000	8300	9200	9500	10500	10800	11800	12200
6	6600	6900	7200	7500	8300	8600	9500	9800	10800	11100	12100	12500
7	6900	7200	7500	7800	8600	8900	9800	10100	11100	11400	12400	12800
8	7200	7500	7800	8100	8900	9200	10100	10400	11400	11700	12700	13100
Wall Thickness (inches)	12	12	12	12	12	12	12	12	12	12	12	12
Slab Thickness (inches)	12	12	12	12	13	13	14	14	15	15	16	16

Box dimensions may vary depending upon equipment availability and location.

Notes:

1. Produced to meet ASTM Specifications.
2. Contact a Concrete Pipe Division representative for details not listed on this sheet.

Rinker 014

EXAMPLE

EQUIPMENT DESIGN LOAD DATA - BNCC OPERATIONS

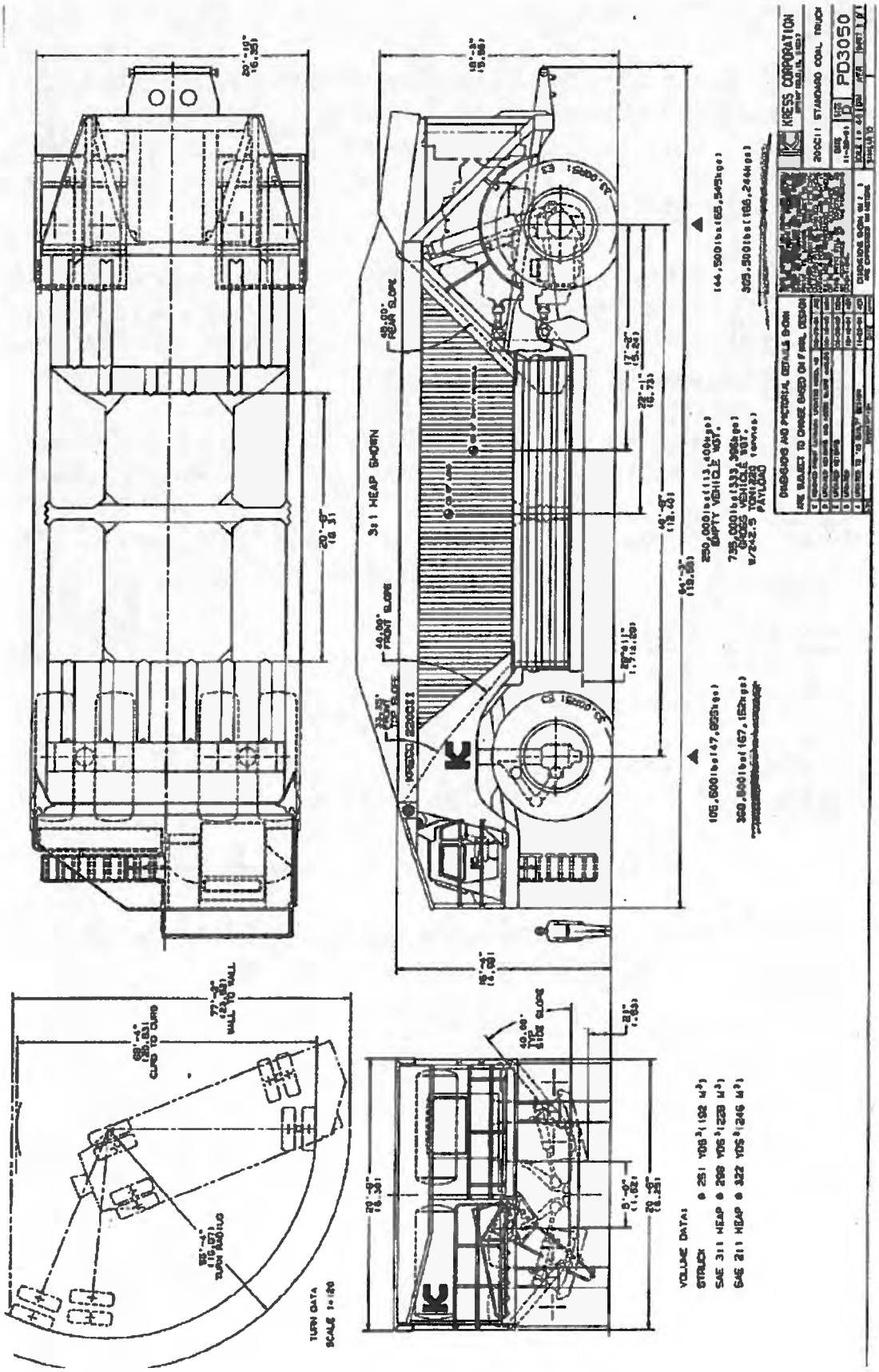

URS

Job BHP/Navajo Cottonwood Crossing Project No. 24342727 Page ___ of ___
Description Revised Machine Loads Computed by BR Sheet 1 of 2
Date 4/19/07
Checked by Samrat Mohanty Date 4/21/07
Reference

DESCRIPTION

- Compare original design haul truck load to revised haul truck to determine effect on the culvert design
- Apparently, this coal hauler was specifically made for BHP/Navajo

CULVERT COVER

→ from phone conversation with Curti 4/18/07, soil cover for revised 4 barrel culvert ranges between 6' to 10'.

→ for preliminary culvert design, used fill height of 8'

REVISED COAL TRUCK

→ See attached revised haul truck specs and tyre data

→ Model KRESS 200 C11
→ Loaded gross vehicle wt = 735,000 lb

→ Critical axle load = 368,500 lbs (front axle)

→ See attach tyre data spec sheets. Use 33.00R51 (E3) tyre as indicated in Coal Hauler Spec sheet.

→ Contact area = 970 in²
→ Loaded tyre width = 41.6 in

URS

Job BHP/Navajo Cottonwood Crossing Project No. 24342727 Page ___ of ___
Description Revised Machine Loads Computed by BC Sheet 2 of 2
Checked by Samrat Mohanty Date 4/19/07
Date 4/21/07
Reference

$\frac{368{,}500}{2 \text{ wheels}} = 184{,}250 \text{ lb}$

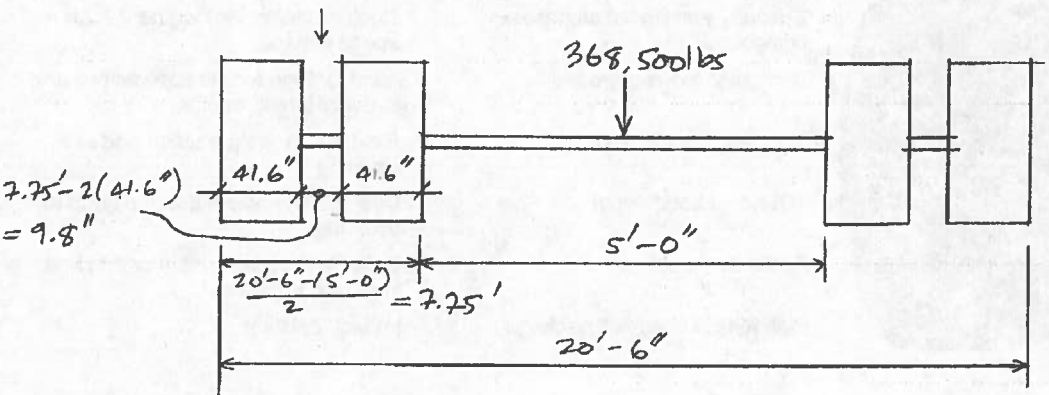

→ Tyres 9.8" apart close enough together to assume a single contact area

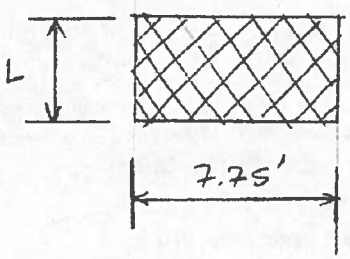

→ from tyre data sheet – gross contact area of tyre = 970 in²
– tyre pressure = 102 lb/in²

$$\sigma = \frac{F}{A}$$

$$A = \frac{F}{\sigma} = \frac{184250 \text{ lb}}{102 \text{ lb/in}^2} = 1806 \text{ in}^2 = 12.54 \text{ ft}^2$$

(compare 970×2 = 1940 in²)

$$L = \frac{12.54 \text{ ft}^2}{7.75 \text{ ft}} = 1.62 \text{ ft}$$

∴ Bearing Pressure = 102 lb/in² = 14,690 say <u>14,700 psf</u>
Bearing Area = <u>12.54 ft²</u>

(check load = 12.54 ft² × 14.7 k/ft² = 184.34 k cf 184.25 k ✓ o.k)

Goodyear Off-the-Road Tire Data Sheet

33.00R51 2* RL-3J Haulage (E-3)

FEATURES	BENEFITS
Specially formulated all natural compound	Cooler running for long haul, high speed service
Centerline zig-zag groove	Ideal for high torque applications and superior lateral traction
Tapered shoulder lugs	Excellent forward traction and self-cleaning
100-Level tread depth	Cool running, value tire and good fuel economy
Radial construction	Better fuel economy, softer ride and improved treadwear
High tensile steel belt package	Impact resistant

SUMMARY STATEMENT:

This 100-level radial rock tire is specifically designed for 130-150 ton dump trucks used in high speed service. Tapered shoulder lugs and a centerline zig-zag groove make this radial ideal for high torque applications and give it superior forward and lateral traction. The radial construction also allows for a softer ride, improved treadwear and better fuel economy.

DIMENSIONAL SPECS

Tread Depth: 63 /32"
Design Rim Width: 24.00-5.0 in.
New Tire Width: 36.5 in.
Loaded Tire Width: 41.6 in.
Minimum Dual Spacing: 42.3
Performance Capability Data:
Industry Code: E-3

Overall Diameter: 118.7 in.
Static Loaded Radius: 53.7 in.
Revs per mile: 177
Gross Contact Area: 970 sq.in.
Compound/Construction: 2S
Product Code: 154-070-746
Ply Rating: 2*

RATED LOAD/INFLATION TABLE
(Per ETRO & T&RA Industry Standards)

Operation Speed (mph)	0.0	2.5	5.0	10.0	15.0	25.0	30.0	45.0
Rated Load (lbs)							85500	
Inflation (psi)							102	

DRESSER
Construction & Mining Equipment

DRESSER INDUSTRIES, INC. • MARION DIVISION
MACHINE SPECIFICATIONS

Model: 8750 WALKING DRAGLINE

Description: Ward Leonard — Static Control — Independent Propel

NAVAJO
KEY #7

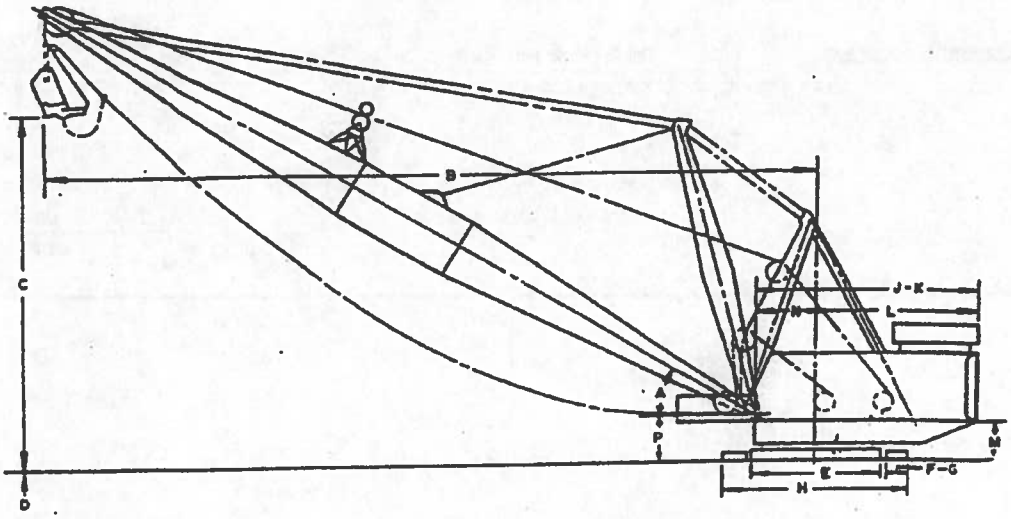

WORKING RANGES

Boom Length	335'-0"
Boom Point Sheave, Pitch Diameter	90"
A - Boom Angle, Approx.	32.5°
B - Dumping Radius	310'-0"
C - Dumping Height	132'-0"
D - Depth	150'-0"
Maximum Allowable Load, lbs.	571,000
Hoist Drum, Pitch Dia.	132"
Hoist Ropes, Four, Dia. Each	3-1/4"
Drag Drum, Pitch Dia.	132"
Drag Rope, Four, Dia. Each	3-1/4"

BASE

E - Outside Diameter - Nominal	80'-0"
Bearing Area - Effective, sq. ft.	5040
Bearing Pressure, psi	18.03
Ball Circle - Mean Dia.	55'-0"
Circle Rollers - Mean Dia.	16"
Main Swing Gear - Pitch Dia., Approx.	45'-0"

WALKING TRACTION

F - Width of Shoe	16'-0"
G - Length of Shoe	80'-0"
H - Width Over Both Shoes	116'-0"
Bearing Area of Both Shoes, sq. ft.	2560
Bearing Pressure @ 80% of Working Weight, psi	28.3
Length of Step - Approx.	8'-2"

ROTATING FRAME

J - Width @ Rear End	80'-0"
K - Length	109'-0"
Depth Sill Members	144"
L - Clearance Radius - Rear End	77'-0"
M - Clearance Under Frame	15'-10"
N - Center Rotation to Boom Foot	24'-0"
P - Ground to Boom Foot	22'-0"

ELECTRICAL EQUIPMENT

Hoist Motors, Eight, 1300 hp each @ 475 V, Total hp	10400
Drag Motors, Six, 1300 hp each @ 475 V, Total hp	7800
Swing Motors, Six, 1045 hp each @ 475 V, Total hp	6270
Propel Motors, Four, 800 hp each @ 475 V, Total hp	3200
AC Driving Motors, Total hp	13000

WEIGHTS

Domestic Shipping Weight (Inc. Bucket), lbs.	11,450,000
Working Weight, lbs.	13,050,000
Ballast (Furnished by Purchaser), lbs.	1,600,000

Shipping Weight Subject to 5% Variation.

Patents Pending
Printed in U.S.A.

The Company reserves the right to improve or change the design of its products and specifications thereof and the Company shall incur no liability thereby or any obligations to install such improvements on products previously sold.

PRECAST BOX CULVERT DESIGNS

Spec.	Box Size	Fill Ht.	Live Load	Slab / Wall Thickness Top	Btm	Side	Haunch	Bx Wt. (lb/ft)	Circumf. Reinf. Areas, in.^{2} / ft. A_{s1}	A_{s2}	A_{s3}	A_{s4}	A_{s7}	A_{s8}	Long. A_{s5}	A_{s6}	M	Clear Concrete Cover, in. c_1	c_2	c_3	c_4	c_7	c_8	f'c ksi	f_y ksi
C1433	8' x 8'	8'	❶	10"	10"	8"	12"	4,233	0.44	1.21	1.21	0.60	-	-	-	-	❷	1.00	1.00	1.00	1.00	-	-	5.0	65

Notes:

❶ All loadings are per criteria stated on MWH Drawing Number S-3, except as follows:
- Dragline surface loading of 5,098 psf on two 16' x 80' shoes.
- Haul truck tire surface loading of 14,700 psf on 12.54 sq. ft. contact area.

❷ As1 must extend the entire length of the top and bottom slab.

Allowable Soil Pressure Requirements:

Dragline loading @ 8' depth	=	2314 psf
Surcharge loading	=	120 psf
Seismic loading	=	80 psf
Earth load	=	1104 psf
Weigth of box culvert	=	454 psf
Weight of water inside box culvert	=	400 psf
Total	=	4472 psf

Barry Chung/Tampa/URSCorp
04/26/2007 12:35 PM

To Christi Tanner/Albuquerque/URSCorp@URSCorp
cc
bcc
Subject Cottonwood - Rinker Culvert Design

Christi -

Here is the Rinker culvert design to place into the design report. Note that the roof, base and walls are thinner, which will save the client money.

The top slab is 2" thinner so the headwall will be 2" higher than the 1'-5" we discussed, but it is still OK.

RCB Designs.pdf

Barry

This e-mail and any attachments are confidential. If you receive this message in error or are not the intended recipient, you should not retain, distribute, disclose or use any of this information and you should destroy the e-mail and any attachments or copies.

APPENDIX D

HYDRAULICS – HEC-RAS ANALYSIS

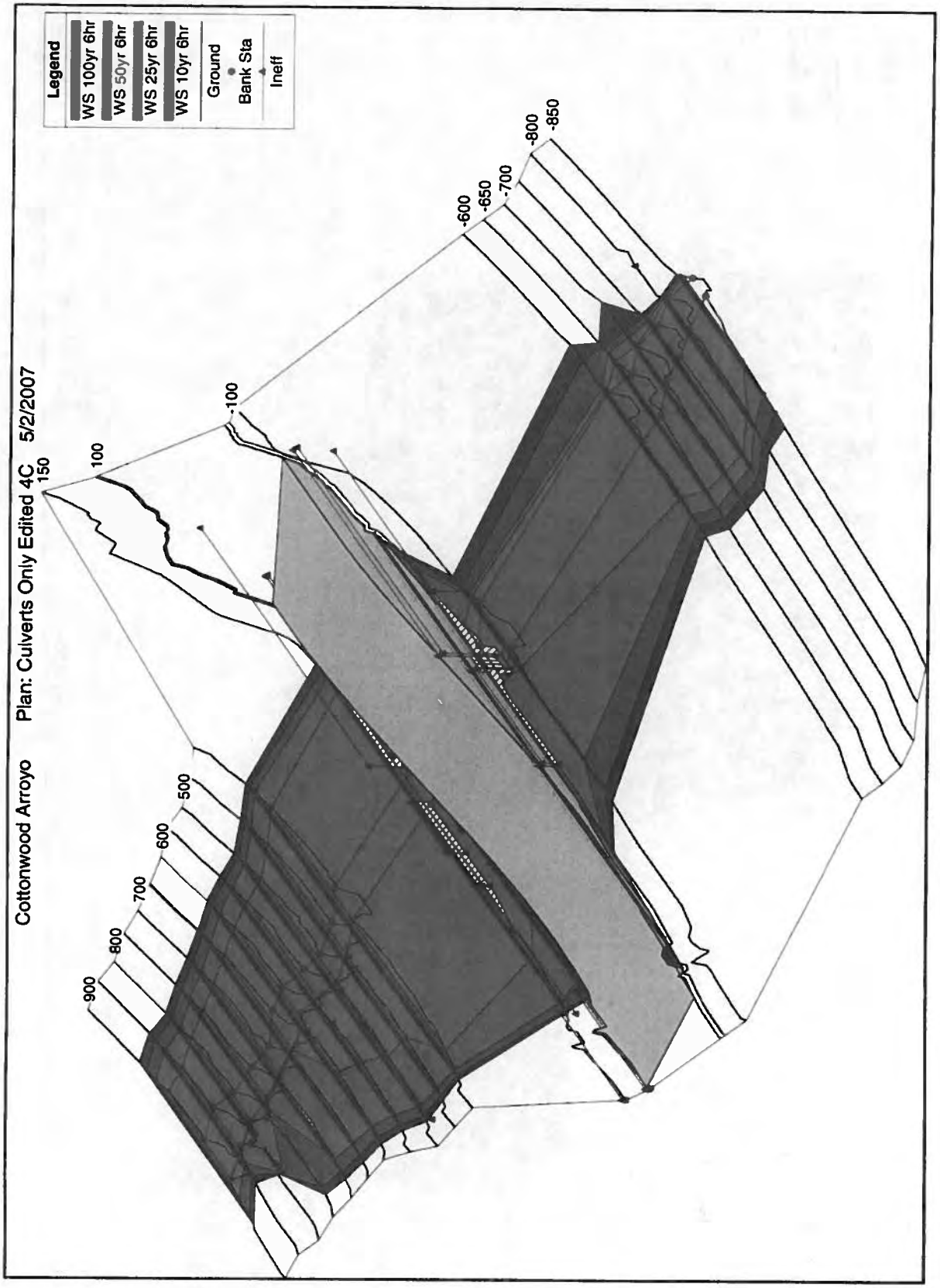
Cottonwood Arroyo Plan: Culverts Only Edited 4C 5/2/2007
Legend
WS 100yr 6hr
WS 50yr 6hr
WS 25yr 6hr
WS 10yr 6hr
Ground
Bank Sta
Ineff
150
100
-100
-600
-650
-700
-800
-850
900
800
700
600
500

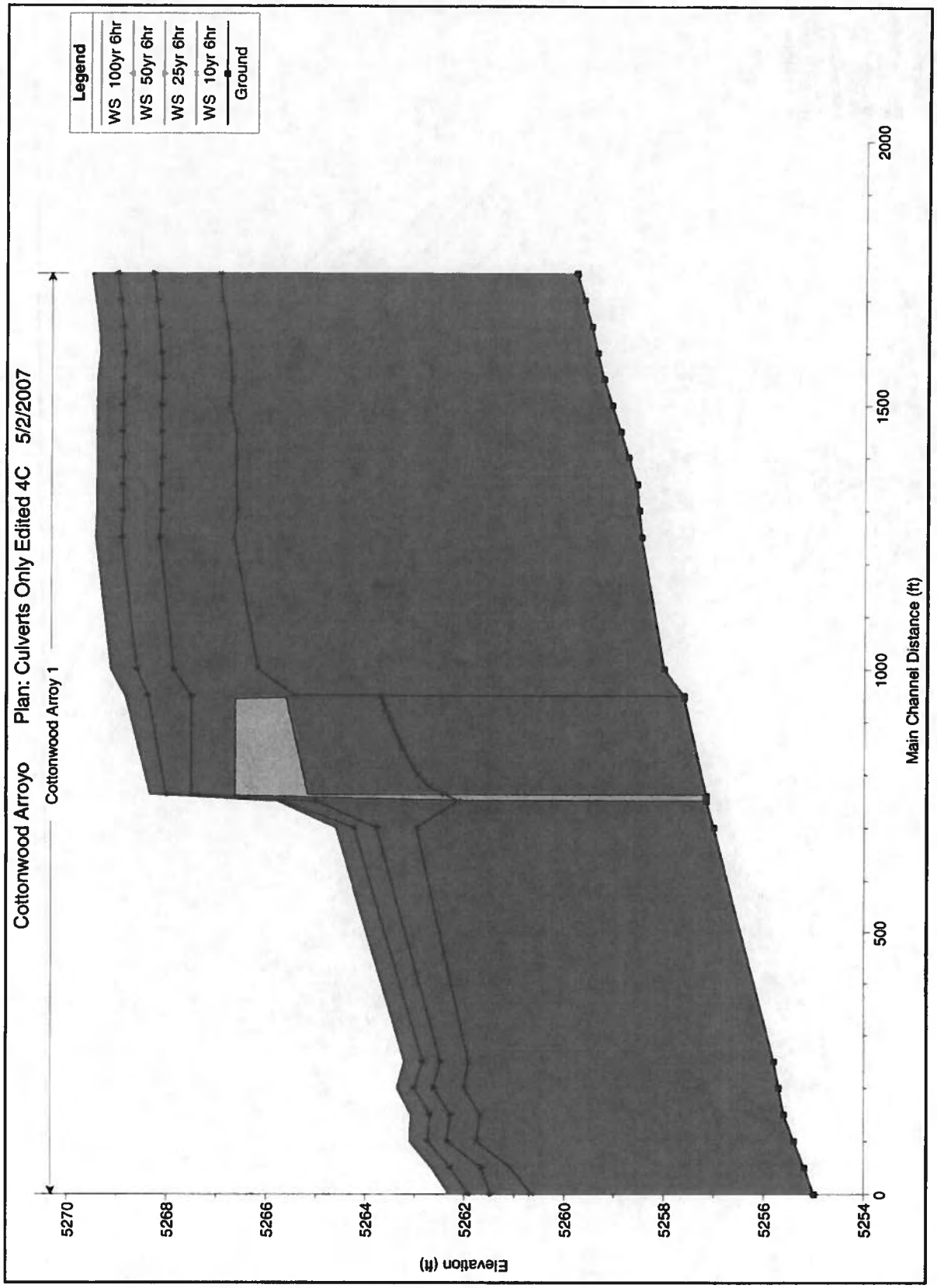
Cottonwood Arroyo Plan: Culverts Only Edited 4C 5/2/2007
Cottonwood Arroy 1
Legend
WS 100yr 6hr
WS 50yr 6hr
WS 25yr 6hr
WS 10yr 6hr
Ground
Elevation (ft)
5270
5268
5266
5264
5262
5260
5258
5256
5254
0
500
1000
1500
2000
Main Channel Distance (ft)

HEC-RAS Plan: 4 Culverts River: Cottonwood Arroy Reach: 1

Reach	River Sta	Profile	Q Total	Min Ch El	W.S. Elev	Crit W.S.	E.G. Elev	E.G. Slope	Vel Chnl	Flow Area	Top Width	Froude # Chl
			(cfs)	(ft)	(ft)	(ft)	(ft)	(ft/ft)	(ft/s)	(sq ft)	(ft)	
1	900	100yr 6hr	4853.00	5259.78	5269.52	5265.75	5269.83	0.000651	4.95	1340.14	383.64	0.31
1	900	50yr 6hr	4040.00	5259.78	5269.01	5265.15	5269.29	0.000615	4.61	1151.93	342.49	0.30
1	900	25yr 6hr	3263.00	5259.78	5268.29	5264.55	5268.55	0.000628	4.35	931.93	279.37	0.29
1	900	10yr 6hr	2186.00	5259.78	5266.95	5263.66	5267 19	0.000704	4.02	615.32	208.19	0.30
1	850	100yr 6hr	4853.00	5259.63	5269.44	5265.58	5269.79	0.000678	5.22	1271.45	354.92	0.32
1	850	50yr 6hr	4040.00	5259.63	5268.94	5264.99	5269.25	0.000632	4.83	1101.36	319.50	0.30
1	850	25yr 6hr	3263.00	5259.63	5268.22	5264.39	5268.51	0.000635	4.54	891.30	266.13	0.30
1	850	10yr 6hr	2186.00	5259.63	5266.91	5263.43	5267.16	0.000668	4.07	590.27	197.20	0.30
1	800	100yr 6hr	4853.00	5259 48	5269.38	5266.80	5269.75	0.000810	5.68	1206.25	353.55	0.34
1	800	50yr 6hr	4040.00	5259.48	5268.88	5266.28	5269.21	0.000750	5.25	1064.93	334.62	0.33
1	800	25yr 6hr	3263.00	5259.48	5268.16	5264.83	5268.47	0.000765	4.98	874.46	274.08	0.33
1	800	10yr 6hr	2186.00	5259.48	5266.80	5263.73	5267.11	0.000895	4.73	571.32	198.81	0.34
1	750	100yr 6hr	4853.00	5259.36	5269.35	5265.97	5269.71	0.000728	5.69	1259.15	462.74	0.33
1	750	50yr 6hr	4040.00	5259.36	5268.85	5265.55	5269.18	0.000673	5.27	1111.82	366.46	0 32
1	750	25yr 6hr	3263.00	5259.36	5268.12	5264.72	5268.44	0.000689	5.02	909.97	265.93	0.32
1	750	10yr 6hr	2186.00	5259.36	5266.75	5263.53	5267.07	0.000796	4.75	580.56	213.01	0.33
1	700	100yr 6hr	4853.00	5259.23	5269.40	5266.76	5269.64	0.000558	5.04	1686.34	526.61	0.29
1	700	50yr 6hr	4040.00	5259.23	5268.88	5266.31	5269.12	0.000563	4.87	1420.05	493.73	0.29
1	700	25yr 6hr	3263.00	5259.23	5268.10	5265.58	5268.40	0.000692	5.08	942 39	428.99	0.32
1	700	10yr 6hr	2186.00	5259.23	5266.72	5263.87	5267.02	0.000828	4.90	616.84	215.15	0.33
1	650	100yr 6hr	4853.00	5259.06	5269.41	5266.13	5269.60	0.000448	4.31	1803.42	552.82	0.26
1	650	50yr 6hr	4040.00	5259.06	5268.89	5265.44	5269.08	0.000447	4.13	1524.12	523.40	0.26
1	650	25yr 6hr	3263.00	5259.06	5268.12	5264.68	5268.34	0.000530	4.22	1042.44	469.87	0.27
1	650	10yr 6hr	2186.00	5259.06	5266.75	5263.45	5266.96	0.000604	3.92	702.74	225.61	0.28
1	600	100yr 6hr	4853.00	5258.89	5269.41	5266.70	5269.57	0.000433	4.19	1979.09	580.87	0.25
1	600	50yr 6hr	4040.00	5258.89	5268.89	5266.26	5269.05	0.000446	4.07	1682.75	552.19	0.25
1	600	25yr 6hr	3263.00	5258.89	5268.12	5265.76	5268.31	0.000550	4.23	1274.79	508.10	0.28
1	600	10yr 6hr	2186.00	5258.89	5266.61	5263.99	5266.91	0.000967	4.80	606.76	308.52	0.35
1	550	100yr 6hr	4853.00	5258.73	5269.40	5266.29	5269.55	0.000363	4.05	2104.02	608.03	0.23
1	550	50yr 6hr	4040.00	5258.73	5268.88	5265.88	5269.02	0.000369	3.93	1792.67	582.33	0.23
1	550	25yr 6hr	3263.00	5258.73	5268 11	5265.37	5268.28	0.000444	4.06	1358.49	542.68	0.25

HEC-RAS Plan: 4 Culverts River: Cottonwood Arroy Reach: 1 (Continued)

Reach	River Sta	Profile	Q Total	Min Ch El	W.S. Elev	Crit W.S.	E.G. Elev	E.G. Slope	Vel Chnl	Flow Area	Top Width	Froude # Chl
			(cfs)	(ft)	(ft)	(ft)	(ft)	(ft/ft)	(ft/s)	(sq ft)	(ft)	
1	550	10yr 6hr	2186.00	5258.73	5266.62	5263.45	5266.85	0.000652	4.29	711.00	294.72	0.29
1	500	100yr 6hr	4853.00	5258.56	5269.41	5266.05	5269.52	0.000282	3.48	2367.44	640.46	0.20
1	500	50yr 6hr	4040.00	5258.56	5268.89	5265.65	5268.99	0.000284	3.35	2039.02	617.04	0.20
1	500	25yr 6hr	3263.00	5258.56	5268.13	5264.87	5268.24	0.000341	3.45	1579.78	580.33	0.22
1	500	10yr 6hr	2186.00	5258.56	5266.63	5263.28	5266.81	0.000564	3.83	783.51	383.37	0.27
1	450	100yr 6hr	4853.00	5258.51	5269.41	5265.95	5269.50	0.000245	3.41	2548.00	672.30	0.19
1	450	50yr 6hr	4040.00	5258.51	5268.89	5265.45	5268.98	0.000247	3.30	2201.96	651.12	0.19
1	450	25yr 6hr	3263.00	5258.51	5268.12	5265.00	5268.22	0.000298	3.42	1712.59	619.95	0.21
1	450	10yr 6hr	2186.00	5258.51	5266.60	5263.03	5266.78	0.000506	3.92	814.47	436.66	0.26
1	400	100yr 6hr	4853.00	5258.46	5269.43	5265.44	5269.48	0.000129	2.36	3283.67	707.39	0.14
1	400	50yr 6hr	4040.00	5258.46	5268.91	5264.96	5268.95	0.000125	2.23	2919.55	689.50	0.13
1	400	25yr 6hr	3263.00	5258.46	5268.15	5264.44	5268.19	0.000141	2.23	2404.62	664.26	0.14
1	400	10yr 6hr	2186.00	5258.46	5266.67	5262.56	5266.72	0.000222	2.44	1479.33	579.60	0.17
1	150	100yr 6hr	4853.00	5258.00	5269.12	5265.47	5269.37	0.000506	4.79	1638.09	829.18	0.28
1	150	50yr 6hr	4040.00	5258.00	5268.60	5264.86	5268.84	0.000510	4.63	1396.11	804.75	0.28
1	150	25yr 6hr	3263.00	5258.00	5267.87	5264.19	5268.09	0.000496	4.30	1106.15	770.01	0.27
1	150	10yr 6hr	2186.00	5258.00	5266.17	5263.02	5266.54	0.000901	4.93	462.63	623.81	0.35
1	100	100yr 6hr	4853.00	5257.60	5268.83	5267.14	5269.31	0.000824	7.13	1326.89	889.75	0.37
1	100	50yr 6hr	4040.00	5257.60	5268.37	5266.48	5268.79	0.000724	6.50	1137.73	878.02	0.35
1	100	25yr 6hr	3263.00	5257.60	5267.51	5264.07	5268.02	0.000868	6.73	847.86	813.88	0.38
1	100	10yr 6hr	2186.00	5257.60	5265 43	5262.55	5266.42	0.001666	7.97	274.16	573.01	0.50
1	0		Culvert									
1	-100	100yr 6hr	4853.00	5257.15	5265.77	5265.77	5267.72	0.003645	12.57	617.06	710.86	0.75
1	-100	50yr 6hr	4040.00	5257.15	5265.68	5265.68	5267.12	0.002695	10.73	594.86	700.49	0.65
1	-100	25yr 6hr	3263.00	5257.15	5265.01	5265.01	5266.49	0.002829	10.41	447.56	625.46	0.65
1	-100	10yr 6hr	2186.00	5257.15	5262.14	5262.14	5264.57	0.007468	12.51	174.79	130.17	0.99
1	-150	100yr 6hr	4853.00	5257.00	5264.59	5262.81	5265.15	0.001837	6.46	1030.67	529.55	0.47
1	-150	50yr 6hr	4040.00	5257.00	5264.23	5262.35	5264.76	0.001801	6.13	853.53	473.51	0.46
1	-150	25yr 6hr	3263.00	5257.00	5263.77	5261.77	5264.23	0.001681	5.59	667.28	306.91	0.44
1	-150	10yr 6hr	2186.00	5257.00	5262.97	5260.60	5263.30	0.001440	4.61	503.58	166.21	0.39

HEC-RAS Plan: 4 Culverts River: Cottonwood Arroy Reach: 1 (Continued)

Reach	River Sta	Profile	Q Total	Min Ch El	W.S. Elev	Crit W.S.	E.G. Elev	E.G. Slope	Vel Chnl	Flow Area	Top Width	Froude # Chl
			(cfs)	(ft)	(ft)	(ft)	(ft)	(ft/ft)	(ft/s)	(sq ft)	(ft)	
1	-600	100yr 6hr	4853.00	5255.80	5263.21	5263.00	5264.07	0.003239	8.01	819.29	451.84	0.67
1	-600	50yr 6hr	4040.00	5255.80	5262.84	5262.54	5263.68	0.003259	7.73	659.50	388.95	0.68
1	-600	25yr 6hr	3263.00	5255.80	5262.48	5261.87	5263.23	0.003019	7.17	543.30	298.90	0.66
1	-600	10yr 6hr	2186.00	5255.80	5261.92	5260.32	5262.47	0.002341	5.99	389.98	232.58	0.60
1	-650	100yr 6hr	4853.00	5255.70	5263.35	5262.29	5263.82	0.001753	6.35	1108.43	437.52	0.48
1	-650	50yr 6hr	4040.00	5255.70	5263.00	5261.87	5263.43	0.001665	5.96	961.15	402.66	0.46
1	-650	25yr 6hr	3263.00	5255.70	5262.62	5261.39	5263.00	0.001554	5.51	814.47	364.65	0.45
1	-650	10yr 6hr	2186.00	5255.70	5262.01	5260.48	5262.30	0.001274	4.63	611.06	304.19	0.40
1	-700	100yr 6hr	4853.00	5255.60	5263.08	5262.55	5263.70	0.002645	7.47	984.29	486.48	0.58
1	-700	50yr 6hr	4040.00	5255.60	5262.69	5262.21	5263.31	0.002750	7.23	812.75	391.62	0.59
1	-700	25yr 6hr	3263.00	5255.60	5262.28	5261.91	5262.88	0.002863	6.93	659.28	350.50	0.59
1	-700	10yr 6hr	2186.00	5255.60	5261.68	5260.90	5262.19	0.002729	6.12	465.05	297.35	0.56
1	-750	100yr 6hr	4853.00	5255.40	5263.10	5261.91	5263.54	0.001651	6.51	1138.49	410.25	0.47
1	-750	50yr 6hr	4040.00	5255.40	5262.74	5261.56	5263.13	0.001568	6.09	996.00	378.46	0.45
1	-750	25yr 6hr	3263.00	5255.40	5262.35	5261.25	5262.69	0.001465	5.61	854.54	344.00	0.43
1	-750	10yr 6hr	2186.00	5255.40	5261.76	5260.65	5262.02	0.001189	4.66	666.39	302.13	0.38
1	-800	100yr 6hr	4853.00	5255.19	5262.66	5262.25	5263.40	0.003353	8.26	876.24	363.14	0.65
1	-800	50yr 6hr	4040.00	5255.19	5262.28	5261.97	5262.99	0.003463	7.96	742.82	336.62	0.65
1	-800	25yr 6hr	3263.00	5255.19	5261.66	5261.66	5262.53	0.004682	8.41	547.39	300.91	0.74
1	-800	10yr 6hr	2186.00	5255.19	5261.07	5261.07	5261.87	0.004735	7.61	378.60	271.03	0.73
1	-850	100yr 6hr	4853.00	5255.00	5262.31	5262.11	5263.21	0.003503	9.74	858.66	361.67	0.68
1	-850	50yr 6hr	4040.00	5255.00	5261.92	5261.62	5262.80	0.003502	9.34	725.51	323.49	0.67
1	-850	25yr 6hr	3263.00	5255.00	5261.47	5261.14	5262.32	0.003506	8.88	590.92	277.21	0.66
1	-850	10yr 6hr	2186.00	5255.00	5260.66	5260.00	5261.42	0.003501	7.99	398.27	197.04	0.64

Cottonwood Arroyo Pre-mine Hydrology and Sedimentology

The drainage subdivisions used to model the hydrology is shown on Exhibit 7-4.

Revised January 2007

AAY/LR

BHP Navajo Coal Company
PO Box 1717
Fruitland, NM
87416

General Information

Storm Information:

Storm Type:	Type II-60
Design Storm:	10 yr - 6 hr
Rainfall Depth:	1.300 inches

Structure Networking:

Type	Stru #	(flows into)	Stru #	Musk. K (hrs)	Musk. X	Description
Null	#1	==>	#2	0.961	0.307	
Null	#2	==>	#3	0.068	0.331	
Null	#3	==>	#4	0.000	0.000	
Null	#4	==>	#9	0.718	0.281	
Null	#5	==>	#6	1.717	0.314	
Null	#6	==>	#7	0.222	0.298	
Null	#7	==>	#8	0.000	0.000	
Null	#8	==>	#10	1.278	0.289	
Null	#9	==>	#11	0.000	0.000	
Null	#10	==>	#11	0.000	0.000	
Null	#11	==>	#21	0.495	0.453	
Null	#12	==>	#13	0.076	0.330	
Null	#13	==>	#14	3.790	0.314	
Null	#14	==>	#16	1.198	0.286	
Null	#15	==>	#16	1.198	0.286	
Null	#16	==>	#20	0.911	0.280	
Null	#17	==>	#19	0.000	0.000	
Null	#18	==>	#19	0.000	0.000	
Null	#19	==>	#20	0.915	0.252	
Null	#20	==>	#22	0.000	0.000	
Null	#21	==>	#22	0.000	0.000	
Null	#22	==>	#23	0.811	0.247	
Null	#23	==>	#35	0.000	0.000	
Null	#24	==>	#25	0.964	0.340	
Null	#25	==>	#27	1.454	0.333	
Null	#26	==>	#27	1.454	0.333	
Null	#27	==>	#29	0.800	0.323	
Null	#28	==>	#29	0.800	0.323	
Null	#29	==>	#32	0.479	0.298	
Null	#30	==>	#32	0.479	0.298	
Null	#31	==>	#33	0.000	0.000	
Null	#32	==>	#33	0.000	0.000	
Null	#33	==>	#34	1.372	0.293	Inlet to North Fork Diversion
Null	#34	==>	#35	0.000	0.000	
Null	#35	==>	#36	0.735	0.251	
Null	#36	==>	#37	3.388	0.246	
Null	#37	==>	End	0.000	0.000	

#30
Null

#28
Null

#26
Null

#24
Null

#25
Null

#27
Null

#29
Null

#32
Null

#31
Null

#33
Null

#34
Null

#5
Null

#6
Null

#7
Null

#8
Null

#10
Null

#1
Null

#2
Null

#3
Null

#4
Null

#9
Null

#11
Null

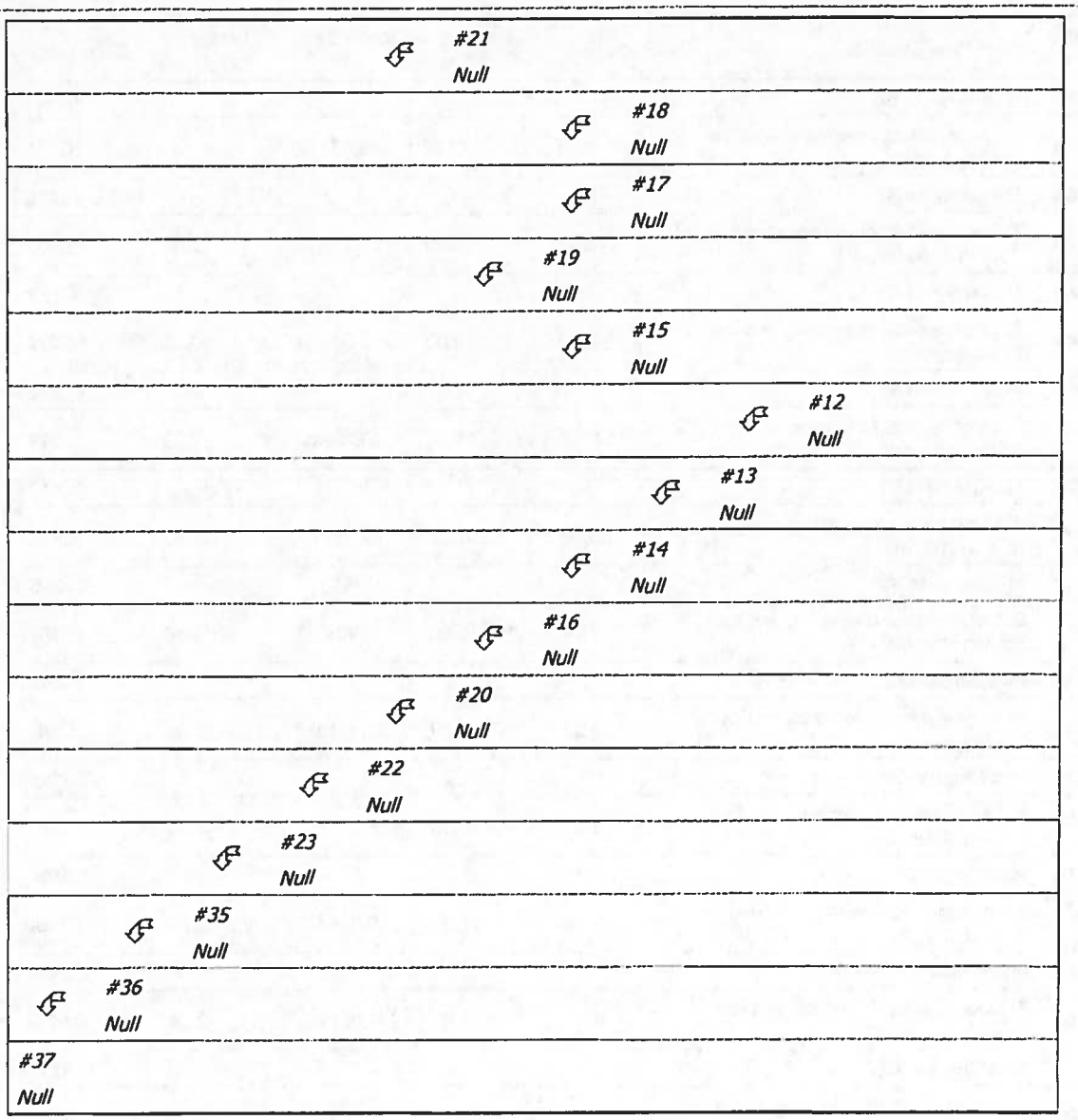

Structure Routing Details:

Stru #	Land Flow Condition	Slope (%)	Vert. Dist. (ft)	Horiz. Dist. (ft)	Velocity (fps)	Time (hrs)
#1	8. Large gullies, diversions, and low flowing streams	0.81	76.00	9,347.00	2.70	0.961
#1	**Muskingum K:**					**0.961**
#2	8. Large gullies, diversions, and low flowing streams	1.23	10.00	814.00	3.32	0.068
#2	**Muskingum K:**					**0.068**
#3	8. Large gullies, diversions, and low flowing streams	0.00	0.00	0.00	0.00	0.000

Stru #	Land Flow Condition	Slope (%)	Vert. Dist. (ft)	Horiz. Dist. (ft)	Velocity (fps)	Time (hrs)
#3	**Muskingum K:**					**0.000**
#4	8. Large gullies, diversions, and low flowing streams	0.53	30.00	5,637.00	2.18	0.718
#4	**Muskingum K:**					**0.718**
#5	8. Large gullies, diversions, and low flowing streams	0.93	165.00	17,810.88	2.88	1.717
#5	**Muskingum K:**					**1.717**
#6	8. Large gullies, diversions, and low flowing streams	0.70	14.00	2,006.01	2.50	0.222
#6	**Muskingum K:**					**0.222**
#8	8. Large gullies, diversions, and low flowing streams	0.61	65.00	10,726.07	2.33	1.278
#8	**Muskingum K:**					**1.278**
#11	8. Large gullies, diversions, and low flowing streams	30.00	8,801.00	29,336.66	16.43	0.495
#11	**Muskingum K:**					**0.495**
#12	8. Large gullies, diversions, and low flowing streams	1.21	11.00	906.00	3.30	0.076
#12	**Muskingum K:**					**0.076**
#13	8. Large gullies, diversions, and low flowing streams	0.92	363.00	39,301.00	2.88	3.790
#13	**Muskingum K:**					**3.790**
#14	8. Large gullies, diversions, and low flowing streams	0.58	57.00	9,834.00	2.28	1.198
#14	**Muskingum K:**					**1.198**
#15	8. Large gullies, diversions, and low flowing streams	0.58	57.00	9,834.00	2.28	1.198
#15	**Muskingum K:**					**1.198**
#16	8. Large gullies, diversions, and low flowing streams	0.52	37.00	7,084.00	2.16	0.911
#16	**Muskingum K:**					**0.911**
#19	8. Large gullies, diversions, and low flowing streams	0.33	19.00	5,699.00	1.73	0.915
#19	**Muskingum K:**					**0.915**
#22	8. Large gullies, diversions, and low flowing streams	0.31	15.00	4,852.00	1.66	0.811
#22	**Muskingum K:**					**0.811**
#24	8. Large gullies, diversions, and low flowing streams	1.46	184.00	12,568.00	3.62	0.964
#24	**Muskingum K:**					**0.964**
#25	8. Large gullies, diversions, and low flowing streams	1.28	228.00	17,755.00	3.39	1.454
#25	**Muskingum K:**					**1.454**
#26	8. Large gullies, diversions, and low flowing streams	1.28	228.00	17,755.62	3.39	1.454
#26	**Muskingum K:**					**1.454**
#27	8. Large gullies, diversions, and low flowing streams	1.07	96.00	8,938.00	3.10	0.800

Stru #	Land Flow Condition	Slope (%)	Vert. Dist. (ft)	Horiz. Dist. (ft)	Velocity (fps)	Time (hrs)
#27	**Muskingum K:**					**0.800**
#28	8. Large gullies, diversions, and low flowing streams	1.07	96.00	8,938.00	3.10	0.800
#28	**Muskingum K:**					**0.800**
#29	8. Large gullies, diversions, and low flowing streams	0.70	30.00	4,313.00	2.50	0.479
#29	**Muskingum K:**					**0.479**
#30	8. Large gullies, diversions, and low flowing streams	0.70	30.00	4,313.00	2.50	0.479
#30	**Muskingum K:**					**0.479**
#33	8. Large gullies, diversions, and low flowing streams	0.65	77.00	11,910.00	2.41	1.372
#33	**Muskingum K:**					**1.372**
#35	8. Large gullies, diversions, and low flowing streams	0.33	15.00	4,554.00	1.72	0.735
#35	**Muskingum K:**					**0.735**
#36	8. Large gullies, diversions, and low flowing streams	0.30	60.00	20,005.00	1.64	3.388
#36	**Muskingum K:**					**3.388**

Structure Summary:

	Immediate Contributing Area (ac)	Total Contributing Area (ac)	Peak Discharge (cfs)	Total Runoff Volume (ac-ft)
#30	476.400	476.400	6.98	1.76
#28	1,217.900	1,217.900	283.47	46.07
#26	2,486.400	2,486.400	46.07	18.65
#24	8,061.800	8,061.800	65.88	51.67
#25	1,015.700	9,077.500	80.90	66.70
#27	1,783.700	13,347.600	183.29	111.80
#29	966.000	15,531.500	426.99	193.50
#32	293.700	16,301.600	441.67	209.47
#31	957.100	957.100	271.94	43.43
#33	0.000	17,258.700	525.37	252.90
#34	932.500	18,191.200	549.99	286.55
#5	2,023.000	2,023.000	353.61	61.88
#6	1,743.200	3,766.200	378.03	119.94
#7	2,395.300	6,161.500	660.04	232.04
#8	0.000	6,161.500	660.04	232.04
#10	1,053.200	7,214.700	695.02	272.19
#1	2,411.100	2,411.100	280.48	56.33
#2	1,497.000	3,908.100	345.41	120.02
#3	862.700	4,770.800	457.63	149.88
#4	0.000	4,770.800	457.63	149.88
#9	425.500	5,196.300	481.74	169.93
#11	0.000	12,411.000	1,064.62	442.12
#21	1,080.800	13,491.800	1,112.92	480.32
#18	848.500	848.500	134.32	28.24
#17	182.200	182.200	90.17	8.82
#19	0.000	1,030.700	209.51	37.06
#15	1,992.700	1,992.700	314.41	62.84
#12	3,494.500	3,494.500	146.72	38.48
#13	2,720.700	6,215.200	284.84	69.00
#14	5,096.800	11,312.000	400.59	209.40
#16	876.500	14,181.200	676.40	313.93
#20	681.900	15,893.800	724.23	382.40
#22	0.000	29,385.600	1,750.57	862.72
#23	752.900	30,138.500	1,749.20	888.40
#35	0.000	48,329.700	2,189.60	1,174.95
#36	891.700	49,221.400	2,186.29	1,195.57
#37	2,208.500	51,429.900	2,165.91	1,247.56

Structure Detail:

Structure #30 (Null)

Structure #28 (Null)

Structure #26 (Null)

Structure #24 (Null)

Structure #25 (Null)

Structure #27 (Null)

Structure #29 (Null)

Structure #32 (Null)

Structure #31 (Null)

Structure #33 (Null)

- *Inlet to North Fork Diversion*

Structure #34 (Null)

Structure #5 (Null)

Structure #6 (Null)

Structure #7 (Null)

Structure #8 (Null)

Structure #10 (Null)

Structure #1 (Null)

Structure #2 (Null)

Structure #3 (Null)

Structure #4 (Null)

Structure #9 (Null)

Structure #11 (Null)

Structure #21 (Null)

Structure #18 (Null)

Structure #17 (Null)

Structure #19 (Null)

Structure #15 (Null)

Structure #12 (Null)

Structure #13 (Null)

Structure #14 (Null)

Structure #16 (Null)

Structure #20 (Null)

Structure #22 (Null)

Structure #23 (Null)

Structure #35 (Null)

Structure #36 (Null)

Structure #37 (Null)

Subwatershed Hydrology Detail:

Stru #	SWS #	SWS Area (ac)	Time of Conc (hrs)	Musk K (hrs)	Musk X	Curve Number	UHS	Peak Discharge (cfs)	Runoff Volume (ac-ft)
#30	1	476.400	1.131	0.000	0.000	70.300	M	6.98	1.757
	Σ	**476.400**						**6.98**	**1.757**
#28	1	772.300	0.657	0.523	0.334	88.300	M	238.37	29.212
	2	445.600	0.587	0.000	0.000	88.300	M	147.51	16.855
	Σ	**1,217.900**						**283.47**	**46.067**
#26	1	447.600	2.192	0.000	0.000	71.800	M	6.36	2.223
	2	2,038.800	3.000	0.000	0.000	74.700	M	39.98	16.427
	Σ	**2,486.400**						**46.07**	**18.649**
#24	1	2,607.500	5.367	2.377	0.305	72.800	M	24.68	15.479
	2	2,331.900	4.813	2.431	0.304	72.300	M	21.92	12.683
	3	1,758.500	2.231	1.788	0.297	73.900	M	36.70	12.518
	4	1,363.900	2.618	0.000	0.000	74.700	M	29.33	10.989
	Σ	**8,061.800**						**65.88**	**51.669**
#25	1	515.200	0.990	0.342	0.357	75.900	M	24.69	4.943
	2	130.500	0.787	0.342	0.357	75.800	M	6.99	1.235
	3	370.000	0.516	0.000	0.000	83.600	M	79.10	8.853
	Σ	**9,077.500**						**80.90**	**66.700**
#27	1	354.400	0.612	1.233	0.337	81.000	M	49.31	6.418
	2	305.200	0.529	1.054	0.328	81.900	M	52.11	6.103
	3	289.800	0.692	0.551	0.328	72.900	M	9.52	1.750
	4	253.000	0.361	0.551	0.328	77.200	M	27.66	2.896
	5	581.300	0.980	0.000	0.000	79.900	M	51.62	9.286
	Σ	**13,347.600**						**183.29**	**111.802**
#29	1	508.800	0.409	0.416	0.312	87.300	M	187.01	17.522
	2	233.200	0.521	0.291	0.312	89.600	M	94.22	9.944
	3	224.000	0.467	0.000	0.000	87.900	M	81.36	8.162
	Σ	**15,531.500**						**426.99**	**193.497**
#32	1	293.700	0.576	0.000	0.000	91.000	M	128.15	14.218
	Σ	**16,301.600**						**441.67**	**209.472**
#31	1	431.100	0.588	0.450	0.336	89.400	M	159.20	18.049
	2	325.800	0.432	0.149	0.327	91.000	M	167.10	15.772
	3	200.200	0.373	0.000	0.000	90.900	M	109.10	9.605
	Σ	**957.100**						**271.94**	**43.426**

Stru #	SWS #	SWS Area (ac)	Time of Conc (hrs)	Musk K (hrs)	Musk X	Curve Number	UHS	Peak Discharge (cfs)	Runoff Volume (ac-ft)
#33	**∑**	**17,258.700**						**525.37**	**252.898**
#34	1	91.700	0.244	0.965	0.300	90.300	M	55.63	4.167
	2	105.200	0.256	0.965	0.300	91.000	M	66.86	5.093
	3	735.600	0.885	0.000	0.000	86.900	M	161.37	24.388
	∑	**18,191.200**						**549.99**	**286.547**
#5	1	503.600	0.707	0.000	0.000	85.600	M	110.93	14.726
	2	406.500	0.492	0.747	0.336	82.800	M	81.19	8.949
	3	439.600	0.626	1.036	0.331	85.800	M	107.12	13.109
	4	162.600	0.332	1.036	0.331	84.000	M	46.98	4.053
	5	294.100	0.505	1.413	0.336	90.000	M	125.65	13.006
	6	216.600	0.341	1.413	0.336	88.100	M	93.95	8.042
	∑	**2,023.000**						**353.61**	**61.884**
#6	1	149.100	0.331	0.000	0.000	90.600	M	83.23	6.962
	2	245.000	0.529	0.228	0.320	85.900	M	67.10	7.377
	3	276.200	0.450	0.605	0.306	87.400	M	97.37	9.602
	4	158.400	0.380	0.605	0.306	91.000	M	86.41	7.668
	5	206.200	0.402	1.110	0.307	87.400	M	77.23	7.169
	6	414.000	0.430	1.512	0.309	85.200	M	118.75	11.639
	7	294.300	0.535	1.512	0.309	84.400	M	67.58	7.639
	∑	**3,766.200**						**378.03**	**119.941**
#7	1	731.700	1.274	0.000	0.000	91.000	M	189.49	35.422
	2	445.800	1.486	0.000	0.000	91.000	M	102.97	21.581
	3	270.800	1.110	0.000	0.000	91.000	M	77.45	13.110
	4	78.900	0.260	1.207	0.322	91.000	M	49.86	3.820
	5	154.900	0.320	1.207	0.322	91.000	M	90.90	7.499
	6	101.400	0.313	1.318	0.323	90.900	M	59.49	4.865
	7	117.700	0.300	1.547	0.323	90.200	M	65.80	5.301
	8	494.100	0.645	1.547	0.323	89.300	M	170.71	20.498
	∑	**6,161.500**						**660.04**	**232.036**
#8	1	0.000	0.000	0.000	0.000	1.000	0.00	0.000	
	∑	**6,161.500**						**660.04**	**232.036**
#10	1	355.500	1.046	0.000	0.000	91.000	M	106.00	17.210
	2	307.100	1.282	0.724	0.301	80.800	M	25.62	5.438
	3	147.300	1.245	0.587	0.297	88.600	M	30.47	5.729
	4	126.400	0.585	0.587	0.297	91.000	M	54.65	6.119
	5	116.900	1.179	0.716	0.297	91.000	M	32.03	5.659
	∑	**7,214.700**						**695.02**	**272.191**
#1	1	557.400	0.941	0.000	0.000	81.200	M	60.60	10.322

Stru #	SWS #	SWS Area (ac)	Time of Conc (hrs)	Musk K (hrs)	Musk X	Curve Number	UHS	Peak Discharge (cfs)	Runoff Volume (ac-ft)
	2	169.600	1.616	0.677	0.333	91.000	M	36.76	8.210
	3	636.400	1.842	0.729	0.333	78.800	M	31.75	8.918
	4	223.400	0.846	1.005	0.336	82.100	M	29.20	4.565
	5	77.700	0.330	1.392	0.341	79.400	M	12.50	1.170
	6	746.600	0.678	1.392	0.341	86.200	M	180.72	23.145
	∑	**2,411.100**						**280.48**	**56.330**
#2	1	257.000	0.423	0.000	0.000	91.000	M	133.24	12.442
	2	180.500	0.562	0.478	0.281	89.700	M	70.50	7.767
	3	200.700	0.687	0.574	0.283	91.000	M	78.80	9.716
	4	438.600	0.811	0.574	0.283	91.000	M	155.00	21.233
	5	420.200	1.247	0.801	0.293	85.800	M	64.79	12.530
	∑	**3,908.100**						**345.41**	**120.018**
#3	1	172.600	0.443	0.000	0.000	91.000	M	87.36	8.356
	2	311.200	0.890	0.000	0.000	86.900	M	68.02	10.318
	3	378.900	0.632	0.209	0.314	85.700	M	90.77	11.189
	∑	**4,770.800**						**457.63**	**149.880**
#4	**∑**	**4,770.800**						**457.63**	**149.880**
#9	1	425.500	0.830	0.000	0.000	90.700	M	143.84	20.049
	∑	**5,196.300**						**481.74**	**169.929**
#11	**∑**	**12,411.000**						**1,064.62**	**442.120**
#21	1	272.800	0.819	0.000	0.000	86.900	M	62.96	9.044
	2	230.500	0.388	0.694	0.266	89.200	M	104.58	9.475
	3	181.100	0.289	0.877	0.256	89.300	M	94.29	7.513
	4	396.400	0.939	0.877	0.256	86.100	M	76.84	12.170
	∑	**13,491.800**						**1,112.92**	**480.323**
#18	1	301.700	0.652	0.000	0.000	91.000	M	122.31	14.605
	2	546.800	0.768	0.561	0.320	84.000	M	95.48	13.630
	∑	**848.500**						**134.32**	**28.235**
#17	1	182.200	0.462	0.000	0.000	91.000	M	90.17	8.820
	∑	**182.200**						**90.17**	**8.820**
#19	**∑**	**1,030.700**						**209.51**	**37.056**
#15	1	437.400	0.803	0.000	0.000	89.300	M	131.37	18.146
	2	549.000	0.637	0.654	0.327	89.300	M	191.13	22.775
	3	1,006.300	1.023	0.768	0.331	82.700	M	124.93	21.920
	∑	**1,992.700**						**314.41**	**62.841**
#12	1	517.800	0.791	0.000	0.000	79.800	M	52.01	8.176

Stru #	SWS #	SWS Area (ac)	Time of Conc (hrs)	Musk K (hrs)	Musk X	Curve Number	UHS	Peak Discharge (cfs)	Runoff Volume (ac-ft)
	2	229.000	0.571	0.043	0.418	78.100	M	21.91	2.943
	3	592.700	0.706	0.044	0.417	79.500	M	61.27	9.034
	4	1,806.900	1.542	0.487	0.362	74.400	M	51.82	13.908
	5	348.100	0.618	0.487	0.362	78.000	M	31.17	4.417
	∑	**3,494.500**						**146.72**	**38.478**
#13	1	411.600	0.725	0.000	0.000	77.600	M	31.27	4.963
	2	636.400	0.774	0.322	0.336	78.700	M	55.18	8.810
	3	319.000	0.575	0.685	0.318	83.500	M	62.92	7.554
	4	231.700	0.314	0.923	0.328	78.400	M	33.16	3.091
	5	1,122.000	1.308	0.923	0.328	72.300	M	23.88	6.102
	∑	**6,215.200**						**284.84**	**68.999**
#14	1	405.900	0.384	0.000	0.000	88.700	M	176.21	15.934
	2	411.100	0.452	0.707	0.308	88.600	M	162.89	15.989
	3	787.400	0.658	0.975	0.307	89.300	M	268.72	32.665
	4	144.200	0.341	1.716	0.310	84.000	M	41.09	3.594
	5	343.800	0.289	1.970	0.312	84.500	M	112.09	9.014
	6	392.800	0.806	2.107	0.316	79.700	M	38.45	6.130
	7	528.200	0.518	2.544	0.316	85.200	M	135.63	14.850
	8	890.900	1.253	2.544	0.316	81.500	M	82.72	17.053
	9	741.400	1.076	3.047	0.316	82.700	M	88.91	16.150
	10	451.100	0.916	3.354	0.316	81.900	M	54.62	9.020
	∑	**11,312.000**						**400.59**	**209.398**
#16	1	329.600	0.641	0.000	0.000	91.000	M	134.99	15.956
	2	348.400	0.542	0.509	0.286	90.500	M	149.98	16.122
	3	198.500	0.266	0.943	0.279	91.000	M	124.54	9.610
	∑	**14,181.200**						**676.40**	**313.926**
#20	1	296.300	0.667	0.000	0.000	89.700	M	104.34	12.750
	2	385.600	0.713	0.476	0.440	91.000	M	147.90	18.667
	∑	**15,893.800**						**724.23**	**382.399**
#22	**∑**	**29,385.600**						**1,750.57**	**862.722**
#23	1	442.400	0.960	0.000	0.000	85.300	M	77.45	12.561
	2	310.500	0.538	0.559	0.291	89.500	M	121.94	13.119
	∑	**30,138.500**						**1,749.20**	**888.402**
#35	**∑**	**48,329.700**						**2,189.60**	**1,174.949**
#36	1	298.200	0.987	0.000	0.000	85.000	M	49.57	8.219
	2	196.800	0.441	0.000	0.000	87.900	M	73.77	7.171
	3	396.700	0.433	0.166	0.372	78.300	M	46.46	5.227

Stru #	SWS #	SWS Area (ac)	Time of Conc (hrs)	Musk K (hrs)	Musk X	Curve Number	UHS	Peak Discharge (cfs)	Runoff Volume (ac-ft)
	Σ	**49,221.400**						**2,186.29**	**1,195.566**
#37	1	744.000	1.756	0.000	0.000	82.800	M	63.54	16.378
	2	296.000	0.439	1.780	0.243	85.800	M	89.55	8.827
	3	237.700	0.333	1.649	0.246	85.500	M	80.62	6.883
	4	561.400	1.502	1.780	0.243	84.100	M	62.58	14.137
	5	369.400	0.817	2.236	0.284	79.700	M	35.86	5.765
	Σ	**51,429.900**						**2,165.91**	**1,247.556**

Subwatershed Time of Concentration Details:

Stru #	SWS #	Land Flow Condition	Slope (%)	Vert. Dist. (ft)	Horiz. Dist. (ft)	Velocity (fps)	Time (hrs)
#1	1	5. Nearly bare and untilled, and alluvial valley fans	3.65	50.00	1,369.00	1.910	0.199
		8. Large gullies, diversions, and low flowing streams	1.57	157.00	10,030.00	3.750	0.742
#1	**1**	**Time of Concentration:**					**0.941**
#1	2	5. Nearly bare and untilled, and alluvial valley fans	6.63	70.00	1,056.00	2.570	0.114
		5. Nearly bare and untilled, and alluvial valley fans	1.98	150.00	7,573.00	1.400	1.502
#1	**2**	**Time of Concentration:**					**1.616**
#1	3	5. Nearly bare and untilled, and alluvial valley fans	1.65	117.00	7,070.00	1.280	1.534
		8. Large gullies, diversions, and low flowing streams	2.43	126.00	5,188.00	4.670	0.308
#1	**3**	**Time of Concentration:**					**1.842**
#1	4	5. Nearly bare and untilled, and alluvial valley fans	5.77	260.00	4,506.00	2.400	0.521
		8. Large gullies, diversions, and low flowing streams	2.84	168.00	5,924.00	5.050	0.325
#1	**4**	**Time of Concentration:**					**0.846**
#1	5	5. Nearly bare and untilled, and alluvial valley fans	19.93	180.00	903.00	4.460	0.056
		8. Large gullies, diversions, and low flowing streams	3.30	178.00	5,393.00	5.450	0.274
#1	**5**	**Time of Concentration:**					**0.330**
#1	6	5. Nearly bare and untilled, and alluvial valley fans	13.43	105.00	782.00	3.660	0.059
		8. Large gullies, diversions, and low flowing streams	2.62	283.00	10,822.00	4.850	0.619
#1	**6**	**Time of Concentration:**					**0.678**
#2	1	5. Nearly bare and untilled, and alluvial valley fans	6.84	70.00	1,024.00	2.610	0.108

Stru #	SWS #	Land Flow Condition	Slope (%)	Vert. Dist. (ft)	Horiz. Dist. (ft)	Velocity (fps)	Time (hrs)
		8. Large gullies, diversions, and low flowing streams	1.62	70.00	4,325.00	3.810	0.315
#2	**1**	**Time of Concentration:**					**0.423**
#2	2	5. Nearly bare and untilled, and alluvial valley fans	5.56	45.00	810.00	2.350	0.095
		8. Large gullies, diversions, and low flowing streams	0.86	40.00	4,663.00	2.770	0.467
#2	**2**	**Time of Concentration:**					**0.562**
#2	3	5. Nearly bare and untilled, and alluvial valley fans	5.89	50.00	849.00	2.420	0.097
		8. Large gullies, diversions, and low flowing streams	1.17	80.00	6,862.00	3.230	0.590
#2	**3**	**Time of Concentration:**					**0.687**
#2	4	5. Nearly bare and untilled, and alluvial valley fans	12.63	95.00	752.00	3.550	0.058
		8. Large gullies, diversions, and low flowing streams	1.40	135.00	9,630.00	3.550	0.753
#2	**4**	**Time of Concentration:**					**0.811**
#2	5	5. Nearly bare and untilled, and alluvial valley fans	11.02	70.00	635.00	3.320	0.053
		8. Large gullies, diversions, and low flowing streams	0.46	40.00	8,732.00	2.030	1.194
#2	**5**	**Time of Concentration:**					**1.247**
#3	1	5. Nearly bare and untilled, and alluvial valley fans	1.24	10.00	805.00	1.110	0.201
		8. Large gullies, diversions, and low flowing streams	1.33	40.00	3,017.00	3.450	0.242
#3	**1**	**Time of Concentration:**					**0.443**
#3	2	5. Nearly bare and untilled, and alluvial valley fans	0.68	10.00	1,478.00	0.820	0.500
		8. Large gullies, diversions, and low flowing streams	1.78	100.00	5,622.00	4.000	0.390
#3	**2**	**Time of Concentration:**					**0.890**
#3	3	5. Nearly bare and untilled, and alluvial valley fans	4.66	70.00	1,501.00	2.150	0.193
		8. Large gullies, diversions, and low flowing streams	1.17	60.00	5,126.00	3.240	0.439
#3	**3**	**Time of Concentration:**					**0.632**
#5	1	5. Nearly bare and untilled, and alluvial valley fans	17.19	110.00	640.00	4.140	0.042
		8. Large gullies, diversions, and low flowing streams	2.72	322.00	11,831.00	4.940	0.665
#5	**1**	**Time of Concentration:**					**0.707**
#5	2	5. Nearly bare and untilled, and alluvial valley fans	11.58	105.00	907.00	3.400	0.074
		8. Large gullies, diversions, and low flowing streams	3.52	298.00	8,475.00	5.620	0.418
#5	**2**	**Time of Concentration:**					**0.492**

Stru #	SWS #	Land Flow Condition	Slope (%)	Vert. Dist. (ft)	Horiz. Dist. (ft)	Velocity (fps)	Time (hrs)
#5	3	5. Nearly bare and untilled, and alluvial valley fans	1.53	25.00	1,638.00	1.230	0.369
		8. Large gullies, diversions, and low flowing streams	4.30	248.00	5,762.00	6.220	0.257
#5	**3**	**Time of Concentration:**					**0.626**
#5	4	5. Nearly bare and untilled, and alluvial valley fans	14.19	85.00	599.00	3.760	0.044
		8. Large gullies, diversions, and low flowing streams	3.99	248.00	6,219.00	5.990	0.288
#5	**4**	**Time of Concentration:**					**0.332**
#5	5	5. Nearly bare and untilled, and alluvial valley fans	4.15	85.00	2,049.00	2.030	0.280
		8. Large gullies, diversions, and low flowing streams	3.24	142.00	4,377.00	5.400	0.225
#5	**5**	**Time of Concentration:**					**0.505**
#5	6	5. Nearly bare and untilled, and alluvial valley fans	8.67	125.00	1,441.00	2.940	0.136
		8. Large gullies, diversions, and low flowing streams	4.81	234.00	4,865.00	6.570	0.205
#5	**6**	**Time of Concentration:**					**0.341**
#6	1	5. Nearly bare and untilled, and alluvial valley fans	5.36	75.00	1,399.00	2.310	0.168
		8. Large gullies, diversions, and low flowing streams	2.41	66.00	2,742.00	4.650	0.163
#6	**1**	**Time of Concentration:**					**0.331**
#6	2	5. Nearly bare and untilled, and alluvial valley fans	3.39	80.00	2,359.00	1.840	0.356
		8. Large gullies, diversions, and low flowing streams	2.63	80.00	3,039.00	4.860	0.173
#6	**2**	**Time of Concentration:**					**0.529**
#6	3	5. Nearly bare and untilled, and alluvial valley fans	4.60	34.00	739.00	2.140	0.095
		8. Large gullies, diversions, and low flowing streams	2.33	136.00	5,845.00	4.570	0.355
#6	**3**	**Time of Concentration:**					**0.450**
#6	4	5. Nearly bare and untilled, and alluvial valley fans	6.06	85.00	1,402.03	2.460	0.158
		8. Large gullies, diversions, and low flowing streams	2.52	96.00	3,810.12	4.760	0.222
#6	**4**	**Time of Concentration:**					**0.380**
#6	5	5. Nearly bare and untilled, and alluvial valley fans	7.24	70.00	967.00	2.690	0.099
		8. Large gullies, diversions, and low flowing streams	2.34	117.00	5,003.00	4.580	0.303
#6	**5**	**Time of Concentration:**					**0.402**
#6	6	5. Nearly bare and untilled, and alluvial valley fans	31.83	183.00	575.00	5.640	0.028
		8. Large gullies, diversions, and low flowing streams	3.38	270.00	7,990.00	5.510	0.402

Stru #	SWS #	Land Flow Condition	Slope (%)	Vert. Dist. (ft)	Horiz. Dist. (ft)	Velocity (fps)	Time (hrs)
#6	**6**	**Time of Concentration:**					**0.430**
#6	7	5. Nearly bare and untilled, and alluvial valley fans	23.08	325.00	1,408.00	4.800	0.081
		8. Large gullies, diversions, and low flowing streams	2.88	240.00	8,327.00	5.090	0.454
#6	**7**	**Time of Concentration:**					**0.535**
#7	1	5. Nearly bare and untilled, and alluvial valley fans	11.42	90.00	788.00	3.370	0.064
		8. Large gullies, diversions, and low flowing streams	1.46	230.00	15,769.62	3.620	1.210
#7	**1**	**Time of Concentration:**					**1.274**
#7	2	5. Nearly bare and untilled, and alluvial valley fans	11.19	60.00	536.00	3.340	0.044
		8. Large gullies, diversions, and low flowing streams	1.26	220.00	17,444.00	3.360	1.442
#7	**2**	**Time of Concentration:**					**1.486**
#7	3	5. Nearly bare and untilled, and alluvial valley fans	5.35	60.00	1,121.00	2.310	0.134
		8. Large gullies, diversions, and low flowing streams	1.43	180.00	12,585.00	3.580	0.976
#7	**3**	**Time of Concentration:**					**1.110**
#7	4	5. Nearly bare and untilled, and alluvial valley fans	14.29	35.00	245.00	3.770	0.018
		8. Large gullies, diversions, and low flowing streams	2.76	120.00	4,349.00	4.980	0.242
#7	**4**	**Time of Concentration:**					**0.260**
#7	5	5. Nearly bare and untilled, and alluvial valley fans	5.36	65.00	1,213.00	2.310	0.145
		8. Large gullies, diversions, and low flowing streams	2.57	78.00	3,034.00	4.810	0.175
#7	**5**	**Time of Concentration:**					**0.320**
#7	6	5. Nearly bare and untilled, and alluvial valley fans	5.64	65.00	1,153.00	2.370	0.135
		8. Large gullies, diversions, and low flowing streams	2.63	82.00	3,119.00	4.860	0.178
#7	**6**	**Time of Concentration:**					**0.313**
#7	7	5. Nearly bare and untilled, and alluvial valley fans	11.90	85.00	714.00	3.450	0.057
		8. Large gullies, diversions, and low flowing streams	2.93	132.00	4,503.00	5.130	0.243
#7	**7**	**Time of Concentration:**					**0.300**
#7	8	5. Nearly bare and untilled, and alluvial valley fans	3.61	25.00	693.00	1.890	0.101
		8. Large gullies, diversions, and low flowing streams	4.12	492.00	11,931.00	6.090	0.544
#7	**8**	**Time of Concentration:**					**0.645**
#9	1	5. Nearly bare and untilled, and alluvial valley fans	3.35	90.00	2,687.00	1.830	0.407

Stru #	SWS #	Land Flow Condition	Slope (%)	Vert. Dist. (ft)	Horiz. Dist. (ft)	Velocity (fps)	Time (hrs)
		8. Large gullies, diversions, and low flowing streams	0.58	20.00	3,463.00	2.270	0.423
#9	**1**	**Time of Concentration:**					**0.830**
#10	1	5. Nearly bare and untilled, and alluvial valley fans	1.76	22.00	1,252.00	1.320	0.263
		8. Large gullies, diversions, and low flowing streams	0.63	42.00	6,683.00	2.370	0.783
#10	**1**	**Time of Concentration:**					**1.046**
#10	2	5. Nearly bare and untilled, and alluvial valley fans	2.25	125.00	5,554.07	1.500	1.028
		8. Large gullies, diversions, and low flowing streams	2.13	85.00	3,997.36	4.370	0.254
#10	**2**	**Time of Concentration:**					**1.282**
#10	3	5. Nearly bare and untilled, and alluvial valley fans	1.39	68.00	4,904.00	1.170	1.164
		8. Large gullies, diversions, and low flowing streams	4.73	90.00	1,904.00	6.520	0.081
#10	**3**	**Time of Concentration:**					**1.245**
#10	4	5. Nearly bare and untilled, and alluvial valley fans	3.76	51.00	1,357.00	1.930	0.195
		8. Large gullies, diversions, and low flowing streams	0.65	22.00	3,385.00	2.410	0.390
#10	**4**	**Time of Concentration:**					**0.585**
#10	5	5. Nearly bare and untilled, and alluvial valley fans	1.63	88.00	5,391.16	1.270	1.179
#10	**5**	**Time of Concentration:**					**1.179**
#12	1	5. Nearly bare and untilled, and alluvial valley fans	4.50	75.00	1,667.00	2.120	0.218
		8. Large gullies, diversions, and low flowing streams	1.85	155.00	8,400.00	4.070	0.573
#12	**1**	**Time of Concentration:**					**0.791**
#12	2	5. Nearly bare and untilled, and alluvial valley fans	2.99	50.00	1,674.03	1.720	0.270
		8. Large gullies, diversions, and low flowing streams	1.67	70.00	4,201.17	3.870	0.301
#12	**2**	**Time of Concentration:**					**0.571**
#12	3	5. Nearly bare and untilled, and alluvial valley fans	4.04	57.00	1,411.00	2.000	0.195
		8. Large gullies, diversions, and low flowing streams	1.55	107.00	6,884.00	3.740	0.511
#12	**3**	**Time of Concentration:**					**0.706**
#12	4	5. Nearly bare and untilled, and alluvial valley fans	2.23	84.00	3,771.04	1.490	0.703
		8. Large gullies, diversions, and low flowing streams	1.62	186.00	11,515.60	3.810	0.839
#12	**4**	**Time of Concentration:**					**1.542**
#12	5	5. Nearly bare and untilled, and alluvial valley fans	3.68	53.00	1,442.00	1.910	0.209

Stru #	SWS #	Land Flow Condition	Slope (%)	Vert. Dist. (ft)	Horiz. Dist. (ft)	Velocity (fps)	Time (hrs)
		8. Large gullies, diversions, and low flowing streams	1.95	120.00	6,155.00	4.180	0.409
#12	**5**	**Time of Concentration:**					**0.618**
#13	1	5. Nearly bare and untilled, and alluvial valley fans	4.62	62.00	1,342.00	2.140	0.174
		8. Large gullies, diversions, and low flowing streams	1.91	157.00	8,225.00	4.140	0.551
#13	**1**	**Time of Concentration:**					**0.725**
#13	2	5. Nearly bare and untilled, and alluvial valley fans	2.91	50.00	1,717.00	1.700	0.280
		8. Large gullies, diversions, and low flowing streams	2.28	183.00	8,039.00	4.520	0.494
#13	**2**	**Time of Concentration:**					**0.774**
#13	3	5. Nearly bare and untilled, and alluvial valley fans	6.18	95.00	1,537.00	2.480	0.172
		8. Large gullies, diversions, and low flowing streams	2.13	135.00	6,347.00	4.370	0.403
#13	**3**	**Time of Concentration:**					**0.575**
#13	4	5. Nearly bare and untilled, and alluvial valley fans	3.17	10.00	315.00	1.780	0.049
		8. Large gullies, diversions, and low flowing streams	2.30	100.00	4,344.00	4.550	0.265
#13	**4**	**Time of Concentration:**					**0.314**
#13	5	5. Nearly bare and untilled, and alluvial valley fans	3.10	70.00	2,255.00	1.760	0.355
		8. Large gullies, diversions, and low flowing streams	1.23	140.00	11,392.00	3.320	0.953
#13	**5**	**Time of Concentration:**					**1.308**
#14	1	5. Nearly bare and untilled, and alluvial valley fans	10.59	63.00	595.00	3.250	0.050
		8. Large gullies, diversions, and low flowing streams	2.60	151.00	5,808.00	4.830	0.334
#14	**1**	**Time of Concentration:**					**0.384**
#14	2	5. Nearly bare and untilled, and alluvial valley fans	7.28	67.00	920.00	2.690	0.095
		8. Large gullies, diversions, and low flowing streams	2.17	123.00	5,670.00	4.410	0.357
#14	**2**	**Time of Concentration:**					**0.452**
#14	3	5. Nearly bare and untilled, and alluvial valley fans	21.46	150.00	699.00	4.630	0.041
		8. Large gullies, diversions, and low flowing streams	3.10	364.00	11,728.00	5.280	0.617
#14	**3**	**Time of Concentration:**					**0.658**
#14	4	5. Nearly bare and untilled, and alluvial valley fans	3.39	35.00	1,032.00	1.840	0.155
		8. Large gullies, diversions, and low flowing streams	2.97	103.00	3,470.00	5.160	0.186
#14	**4**	**Time of Concentration:**					**0.341**

Stru #	SWS #	Land Flow Condition	Slope (%)	Vert. Dist. (ft)	Horiz. Dist. (ft)	Velocity (fps)	Time (hrs)
#14	5	5. Nearly bare and untilled, and alluvial valley fans	28.15	125.00	444.00	5.300	0.023
		8. Large gullies, diversions, and low flowing streams	4.18	246.00	5,886.00	6.130	0.266
#14	**5**	**Time of Concentration:**					**0.289**
#14	6	5. Nearly bare and untilled, and alluvial valley fans	3.18	40.00	1,257.00	1.780	0.196
		8. Large gullies, diversions, and low flowing streams	2.29	228.00	9,963.00	4.530	0.610
#14	**6**	**Time of Concentration:**					**0.806**
#14	7	5. Nearly bare and untilled, and alluvial valley fans	16.72	100.00	598.00	4.080	0.040
		8. Large gullies, diversions, and low flowing streams	2.81	243.00	8,649.00	5.020	0.478
#14	**7**	**Time of Concentration:**					**0.518**
#14	8	5. Nearly bare and untilled, and alluvial valley fans	1.70	47.00	2,765.00	1.300	0.590
		8. Large gullies, diversions, and low flowing streams	2.44	274.00	11,208.00	4.690	0.663
#14	**8**	**Time of Concentration:**					**1.253**
#14	9	5. Nearly bare and untilled, and alluvial valley fans	2.87	105.00	3,657.00	1.690	0.601
		8. Large gullies, diversions, and low flowing streams	2.43	194.00	7,991.00	4.670	0.475
#14	**9**	**Time of Concentration:**					**1.076**
#14	10	5. Nearly bare and untilled, and alluvial valley fans	2.75	80.00	2,907.00	1.650	0.489
		8. Large gullies, diversions, and low flowing streams	2.41	172.00	7,149.00	4.650	0.427
#14	**10**	**Time of Concentration:**					**0.916**
#15	1	5. Nearly bare and untilled, and alluvial valley fans	12.80	54.00	422.00	3.570	0.032
		8. Large gullies, diversions, and low flowing streams	1.68	181.00	10,781.00	3.880	0.771
#15	**1**	**Time of Concentration:**					**0.803**
#15	2	5. Nearly bare and untilled, and alluvial valley fans	44.22	260.00	588.00	6.640	0.024
		8. Large gullies, diversions, and low flowing streams	2.45	254.00	10,354.00	4.690	0.613
#15	**2**	**Time of Concentration:**					**0.637**
#15	3	5. Nearly bare and untilled, and alluvial valley fans	10.04	85.00	847.00	3.160	0.074
		8. Large gullies, diversions, and low flowing streams	2.34	366.00	15,663.00	4.580	0.949
#15	**3**	**Time of Concentration:**					**1.023**
#16	1	5. Nearly bare and untilled, and alluvial valley fans	4.17	15.00	360.00	2.040	0.049
		8. Large gullies, diversions, and low flowing streams	1.42	108.00	7,618.00	3.570	0.592

Stru #	SWS #	Land Flow Condition	Slope (%)	Vert. Dist. (ft)	Horiz. Dist. (ft)	Velocity (fps)	Time (hrs)
#16	**1**	**Time of Concentration:**					**0.641**
#16	2	5. Nearly bare and untilled, and alluvial valley fans	8.70	62.00	713.00	2.940	0.067
		8. Large gullies, diversions, and low flowing streams	1.99	144.00	7,241.00	4.230	0.475
#16	**2**	**Time of Concentration:**					**0.542**
#16	3	5. Nearly bare and untilled, and alluvial valley fans	6.88	32.00	465.00	2.620	0.049
		8. Large gullies, diversions, and low flowing streams	2.29	81.00	3,543.00	4.530	0.217
#16	**3**	**Time of Concentration:**					**0.266**
#17	1	5. Nearly bare and untilled, and alluvial valley fans	9.37	65.00	694.00	3.060	0.062
		8. Large gullies, diversions, and low flowing streams	1.19	56.00	4,712.00	3.270	0.400
#17	**1**	**Time of Concentration:**					**0.462**
#18	1	5. Nearly bare and untilled, and alluvial valley fans	9.00	60.00	667.00	2.990	0.061
		8. Large gullies, diversions, and low flowing streams	0.97	61.00	6,287.00	2.950	0.591
#18	**1**	**Time of Concentration:**					**0.652**
#18	2	5. Nearly bare and untilled, and alluvial valley fans	2.47	33.00	1,336.00	1.570	0.236
		8. Large gullies, diversions, and low flowing streams	2.01	164.00	8,154.00	4.250	0.532
#18	**2**	**Time of Concentration:**					**0.768**
#20	1	5. Nearly bare and untilled, and alluvial valley fans	11.87	45.00	379.00	3.440	0.030
		8. Large gullies, diversions, and low flowing streams	0.75	45.00	5,969.00	2.600	0.637
#20	**1**	**Time of Concentration:**					**0.667**
#20	2	5. Nearly bare and untilled, and alluvial valley fans	5.40	45.00	833.00	2.320	0.099
		8. Large gullies, diversions, and low flowing streams	1.30	98.00	7,547.00	3.410	0.614
#20	**2**	**Time of Concentration:**					**0.713**
#21	1	5. Nearly bare and untilled, and alluvial valley fans	4.09	60.00	1,467.00	2.020	0.201
		8. Large gullies, diversions, and low flowing streams	0.93	60.00	6,433.00	2.890	0.618
#21	**1**	**Time of Concentration:**					**0.819**
#21	2	5. Nearly bare and untilled, and alluvial valley fans	3.50	50.00	1,430.00	1.860	0.213
		8. Large gullies, diversions, and low flowing streams	2.15	60.00	2,785.00	4.400	0.175
#21	**2**	**Time of Concentration:**					**0.388**
#21	3	5. Nearly bare and untilled, and alluvial valley fans	1.70	15.00	881.00	1.300	0.188
		9. Small streams flowing bankfull	1.49	60.00	4,014.00	11.000	0.101

Stru #	SWS #	Land Flow Condition	Slope (%)	Vert. Dist. (ft)	Horiz. Dist. (ft)	Velocity (fps)	Time (hrs)
#21	**3**	**Time of Concentration:**					**0.289**
#21	4	5. Nearly bare and untilled, and alluvial valley fans	2.21	40.00	1,811.02	1.480	0.339
		8. Large gullies, diversions, and low flowing streams	0.84	50.00	5,949.54	2.750	0.600
#21	**4**	**Time of Concentration:**					**0.939**
#23	1	5. Nearly bare and untilled, and alluvial valley fans	2.44	65.00	2,660.01	1.560	0.473
		8. Large gullies, diversions, and low flowing streams	0.33	10.00	3,017.50	1.720	0.487
#23	**1**	**Time of Concentration:**					**0.960**
#23	2	5. Nearly bare and untilled, and alluvial valley fans	3.49	60.00	1,718.01	1.860	0.256
		8. Large gullies, diversions, and low flowing streams	1.66	65.00	3,926.06	3.860	0.282
#23	**2**	**Time of Concentration:**					**0.538**
#24	1	5. Nearly bare and untilled, and alluvial valley fans	1.71	430.00	25,118.00	1.300	5.367
#24	**1**	**Time of Concentration:**					**5.367**
#24	2	5. Nearly bare and untilled, and alluvial valley fans	1.84	430.00	23,393.00	1.350	4.813
#24	**2**	**Time of Concentration:**					**4.813**
#24	3	5. Nearly bare and untilled, and alluvial valley fans	1.82	155.00	8,498.00	1.350	1.748
		8. Large gullies, diversions, and low flowing streams	0.84	40.00	4,771.00	2.740	0.483
#24	**3**	**Time of Concentration:**					**2.231**
#24	4	5. Nearly bare and untilled, and alluvial valley fans	1.24	50.00	4,042.00	1.110	1.011
		8. Large gullies, diversions, and low flowing streams	0.49	60.00	12,150.00	2.100	1.607
#24	**4**	**Time of Concentration:**					**2.618**
#25	1	5. Nearly bare and untilled, and alluvial valley fans	0.51	10.00	1,950.00	0.710	0.762
		8. Large gullies, diversions, and low flowing streams	1.81	60.00	3,322.00	4.030	0.228
#25	**1**	**Time of Concentration:**					**0.990**
#25	2	5. Nearly bare and untilled, and alluvial valley fans	1.11	25.00	2,254.00	1.050	0.596
		8. Large gullies, diversions, and low flowing streams	2.36	75.00	3,178.00	4.600	0.191
#25	**2**	**Time of Concentration:**					**0.787**
#25	3	5. Nearly bare and untilled, and alluvial valley fans	3.23	30.00	929.00	1.790	0.144
		8. Large gullies, diversions, and low flowing streams	2.45	154.00	6,297.00	4.690	0.372
#25	**3**	**Time of Concentration:**					**0.516**
#26	1	5. Nearly bare and untilled, and alluvial valley fans	1.20	103.00	8,602.00	1.090	2.192

Stru #	SWS #	Land Flow Condition	Slope (%)	Vert. Dist. (ft)	Horiz. Dist. (ft)	Velocity (fps)	Time (hrs)
#26	**1**	**Time of Concentration:**					**2.192**
#26	2	5. Nearly bare and untilled, and alluvial valley fans	1.23	120.00	9,780.00	1.100	2.469
		8. Large gullies, diversions, and low flowing streams	2.18	184.00	8,454.00	4.420	0.531
#26	**2**	**Time of Concentration:**					**3.000**
#27	1	5. Nearly bare and untilled, and alluvial valley fans	4.32	50.00	1,158.02	2.070	0.155
		8. Large gullies, diversions, and low flowing streams	2.53	198.00	7,838.16	4.760	0.457
#27	**1**	**Time of Concentration:**					**0.612**
#27	2	5. Nearly bare and untilled, and alluvial valley fans	5.26	30.00	570.00	2.290	0.069
		8. Large gullies, diversions, and low flowing streams	3.15	278.00	8,822.00	5.320	0.460
#27	**2**	**Time of Concentration:**					**0.529**
#27	3	5. Nearly bare and untilled, and alluvial valley fans	16.33	80.00	490.00	4.040	0.033
		8. Large gullies, diversions, and low flowing streams	2.15	225.00	10,443.00	4.400	0.659
#27	**3**	**Time of Concentration:**					**0.692**
#27	4	5. Nearly bare and untilled, and alluvial valley fans	12.43	65.00	523.00	3.520	0.041
		8. Large gullies, diversions, and low flowing streams	3.49	225.00	6,454.00	5.600	0.320
#27	**4**	**Time of Concentration:**					**0.361**
#27	5	5. Nearly bare and untilled, and alluvial valley fans	9.40	25.00	266.00	3.060	0.024
		8. Large gullies, diversions, and low flowing streams	2.32	364.00	15,700.00	4.560	0.956
#27	**5**	**Time of Concentration:**					**0.980**
#28	1	5. Nearly bare and untilled, and alluvial valley fans	5.25	40.00	762.00	2.290	0.092
		8. Large gullies, diversions, and low flowing streams	2.96	310.00	10,479.34	5.150	0.565
#28	**1**	**Time of Concentration:**					**0.657**
#28	2	5. Nearly bare and untilled, and alluvial valley fans	25.86	105.00	406.00	5.080	0.022
		8. Large gullies, diversions, and low flowing streams	2.96	310.00	10,479.34	5.150	0.565
#28	**2**	**Time of Concentration:**					**0.587**
#29	1	5. Nearly bare and untilled, and alluvial valley fans	11.58	30.00	259.00	3.400	0.021
		8. Large gullies, diversions, and low flowing streams	3.61	288.00	7,976.00	5.700	0.388
#29	**1**	**Time of Concentration:**					**0.409**
#29	2	5. Nearly bare and untilled, and alluvial valley fans	8.06	40.00	496.00	2.830	0.048

Stru #	SWS #	Land Flow Condition	Slope (%)	Vert. Dist. (ft)	Horiz. Dist. (ft)	Velocity (fps)	Time (hrs)
		8. Large gullies, diversions, and low flowing streams	2.90	252.00	8,693.55	5.100	0.473
#29	**2**	**Time of Concentration:**					**0.521**
#29	3	5. Nearly bare and untilled, and alluvial valley fans	7.25	25.00	345.00	2.690	0.035
		8. Large gullies, diversions, and low flowing streams	2.26	158.00	7,001.00	4.500	0.432
#29	**3**	**Time of Concentration:**					**0.467**
#30	1	5. Nearly bare and untilled, and alluvial valley fans	4.93	35.00	710.00	2.220	0.088
		8. Large gullies, diversions, and low flowing streams	1.67	243.00	14,540.00	3.870	1.043
#30	**1**	**Time of Concentration:**					**1.131**
#31	1	5. Nearly bare and untilled, and alluvial valley fans	2.91	15.00	515.00	1.700	0.084
		8. Large gullies, diversions, and low flowing streams	2.74	247.00	9,006.00	4.960	0.504
#31	**1**	**Time of Concentration:**					**0.588**
#31	2	5. Nearly bare and untilled, and alluvial valley fans	7.46	25.00	335.00	2.730	0.034
		8. Large gullies, diversions, and low flowing streams	2.18	138.00	6,335.00	4.420	0.398
#31	**2**	**Time of Concentration:**					**0.432**
#31	3	5. Nearly bare and untilled, and alluvial valley fans	3.84	20.00	521.00	1.950	0.074
		8. Large gullies, diversions, and low flowing streams	2.24	108.00	4,826.00	4.480	0.299
#31	**3**	**Time of Concentration:**					**0.373**
#32	1	5. Nearly bare and untilled, and alluvial valley fans	3.48	22.00	632.00	1.860	0.094
		8. Large gullies, diversions, and low flowing streams	1.56	101.00	6,494.00	3.740	0.482
#32	**1**	**Time of Concentration:**					**0.576**
#34	1	5. Nearly bare and untilled, and alluvial valley fans	3.21	25.00	779.00	1.790	0.120
		8. Large gullies, diversions, and low flowing streams	2.80	63.00	2,251.00	5.010	0.124
#34	**1**	**Time of Concentration:**					**0.244**
#34	2	5. Nearly bare and untilled, and alluvial valley fans	5.75	40.00	696.00	2.390	0.080
		8. Large gullies, diversions, and low flowing streams	23.00	2,100.00	9,130.43	14.380	0.176
#34	**2**	**Time of Concentration:**					**0.256**
#34	3	5. Nearly bare and untilled, and alluvial valley fans	2.67	40.00	1,500.00	1.630	0.255
		8. Large gullies, diversions, and low flowing streams	1.28	98.00	7,675.00	3.380	0.630
#34	**3**	**Time of Concentration:**					**0.885**

Stru #	SWS #	Land Flow Condition	Slope (%)	Vert. Dist. (ft)	Horiz. Dist. (ft)	Velocity (fps)	Time (hrs)
#36	1	5. Nearly bare and untilled, and alluvial valley fans	3.21	105.00	3,274.00	1.790	0.508
		8. Large gullies, diversions, and low flowing streams	0.21	5.00	2,367.00	1.370	0.479
#36	**1**	**Time of Concentration:**					**0.987**
#36	2	5. Nearly bare and untilled, and alluvial valley fans	5.50	140.00	2,547.00	2.340	0.302
		8. Large gullies, diversions, and low flowing streams	1.58	30.00	1,897.00	3.770	0.139
#36	**2**	**Time of Concentration:**					**0.441**
#36	3	5. Nearly bare and untilled, and alluvial valley fans	1.72	20.00	1,166.00	1.300	0.249
		8. Large gullies, diversions, and low flowing streams	2.31	70.00	3,029.00	4.560	0.184
#36	**3**	**Time of Concentration:**					**0.433**
#37	1	5. Nearly bare and untilled, and alluvial valley fans	4.68	129.00	2,754.05	2.160	0.354
		8. Large gullies, diversions, and low flowing streams	0.16	10.00	6,108.73	1.210	1.402
#37	**1**	**Time of Concentration:**					**1.756**
#37	2	5. Nearly bare and untilled, and alluvial valley fans	7.32	90.00	1,229.00	2.700	0.126
		8. Large gullies, diversions, and low flowing streams	1.62	70.00	4,309.01	3.820	0.313
#37	**2**	**Time of Concentration:**					**0.439**
#37	3	5. Nearly bare and untilled, and alluvial valley fans	8.10	100.00	1,234.00	2.840	0.120
		8. Large gullies, diversions, and low flowing streams	2.66	100.00	3,763.21	4.890	0.213
#37	**3**	**Time of Concentration:**					**0.333**
#37	4	5. Nearly bare and untilled, and alluvial valley fans	5.09	90.00	1,768.03	2.250	0.218
		8. Large gullies, diversions, and low flowing streams	0.36	30.00	8,326.39	1.800	1.284
#37	**4**	**Time of Concentration:**					**1.502**
#37	5	5. Nearly bare and untilled, and alluvial valley fans	0.81	20.00	2,466.09	0.900	0.761
		8. Large gullies, diversions, and low flowing streams	4.06	50.00	1,231.01	6.040	0.056
#37	**5**	**Time of Concentration:**					**0.817**

Subwatershed Muskingum Routing Details:

Stru #	SWS #	Land Flow Condition	Slope (%)	Vert. Dist. (ft)	Horiz. Dist. (ft)	Velocity (fps)	Time (hrs)
#1	2	8. Large gullies, diversions, and low flowing streams	1.29	107.00	8,294.57	3.400	0.677
#1	**2**	**Muskingum K:**					**0.677**

Stru #	SWS #	Land Flow Condition	Slope (%)	Vert. Dist. (ft)	Horiz. Dist. (ft)	Velocity (fps)	Time (hrs)
#1	3	8. Large gullies, diversions, and low flowing streams	1.27	113.00	8,880.15	3.380	0.729
#1	**3**	**Muskingum K:**					**0.729**
#1	4	8. Large gullies, diversions, and low flowing streams	1.35	171.00	12,634.84	3.490	1.005
#1	**4**	**Muskingum K:**					**1.005**
#1	5	8. Large gullies, diversions, and low flowing streams	1.49	274.00	18,351.08	3.660	1.392
#1	**5**	**Muskingum K:**					**1.392**
#1	6	8. Large gullies, diversions, and low flowing streams	1.49	274.00	18,349.00	3.660	1.392
#1	**6**	**Muskingum K:**					**1.392**
#2	2	8. Large gullies, diversions, and low flowing streams	0.53	20.00	3,756.57	2.180	0.478
#2	**2**	**Muskingum K:**					**0.478**
#2	3	8. Large gullies, diversions, and low flowing streams	0.55	25.00	4,570.38	2.210	0.574
#2	**3**	**Muskingum K:**					**0.574**
#2	4	8. Large gullies, diversions, and low flowing streams	0.55	25.00	4,570.00	2.210	0.574
#2	**4**	**Muskingum K:**					**0.574**
#2	5	8. Large gullies, diversions, and low flowing streams	0.65	45.00	6,955.17	2.410	0.801
#2	**5**	**Muskingum K:**					**0.801**
#3	3	8. Large gullies, diversions, and low flowing streams	0.92	20.00	2,168.02	2.880	0.209
#3	**3**	**Muskingum K:**					**0.209**
#5	1	8. Large gullies, diversions, and low flowing streams	0.00	0.00	0.00	0.000	0.000
#5	**1**	**Muskingum K:**					**0.000**
#5	2	8. Large gullies, diversions, and low flowing streams	1.34	125.00	9,339.51	3.470	0.747
#5	**2**	**Muskingum K:**					**0.747**
#5	3	8. Large gullies, diversions, and low flowing streams	1.24	155.00	12,461.81	3.340	1.036
#5	**3**	**Muskingum K:**					**1.036**
#5	4	8. Large gullies, diversions, and low flowing streams	1.24	155.00	12,461.81	3.340	1.036
#5	**4**	**Muskingum K:**					**1.036**
#5	5	8. Large gullies, diversions, and low flowing streams	1.35	239.00	17,712.88	3.480	1.413
#5	**5**	**Muskingum K:**					**1.413**
#5	6	8. Large gullies, diversions, and low flowing streams	1.35	239.00	17,712.00	3.480	1.413
#5	**6**	**Muskingum K:**					**1.413**
#6	2	8. Large gullies, diversions, and low flowing streams	1.01	25.00	2,481.38	3.010	0.228
#6	**2**	**Muskingum K:**					**0.228**

Stru #	SWS #	Land Flow Condition	Slope (%)	Vert. Dist. (ft)	Horiz. Dist. (ft)	Velocity (fps)	Time (hrs)
#6	3	8. Large gullies, diversions, and low flowing streams	0.80	47.00	5,846.00	2.680	0.605
#6	**3**	**Muskingum K:**					**0.605**
#6	4	8. Large gullies, diversions, and low flowing streams	0.80	47.00	5,846.00	2.680	0.605
#6	**4**	**Muskingum K:**					**0.605**
#6	5	8. Large gullies, diversions, and low flowing streams	0.82	89.00	10,838.00	2.710	1.110
#6	**5**	**Muskingum K:**					**1.110**
#6	6	8. Large gullies, diversions, and low flowing streams	0.84	125.00	14,917.00	2.740	1.512
#6	**6**	**Muskingum K:**					**1.512**
#6	7	8. Large gullies, diversions, and low flowing streams	0.84	125.00	14,917.00	2.740	1.512
#6	**7**	**Muskingum K:**					**1.512**
#7	1	8. Large gullies, diversions, and low flowing streams	0.00	0.00	0.00	0.000	0.000
#7	**1**	**Muskingum K:**					**0.000**
#7	2	8. Large gullies, diversions, and low flowing streams	0.00	0.00	0.00	0.000	0.000
#7	**2**	**Muskingum K:**					**0.000**
#7	4	8. Large gullies, diversions, and low flowing streams	1.05	140.00	13,344.77	3.070	1.207
#7	**4**	**Muskingum K:**					**1.207**
#7	5	8. Large gullies, diversions, and low flowing streams	1.05	140.00	13,344.00	3.070	1.207
#7	**5**	**Muskingum K:**					**1.207**
#7	6	8. Large gullies, diversions, and low flowing streams	1.07	158.00	14,716.84	3.100	1.318
#7	**6**	**Muskingum K:**					**1.318**
#7	7	8. Large gullies, diversions, and low flowing streams	1.08	187.00	17,322.83	3.110	1.547
#7	**7**	**Muskingum K:**					**1.547**
#7	8	8. Large gullies, diversions, and low flowing streams	1.08	187.00	17,322.00	3.110	1.547
#7	**8**	**Muskingum K:**					**1.547**
#10	2	8. Large gullies, diversions, and low flowing streams	0.74	50.00	6,729.00	2.580	0.724
#10	**2**	**Muskingum K:**					**0.724**
#10	3	8. Large gullies, diversions, and low flowing streams	0.69	36.00	5,241.00	2.480	0.587
#10	**3**	**Muskingum K:**					**0.587**
#10	4	8. Large gullies, diversions, and low flowing streams	0.69	36.00	5,241.00	2.480	0.587
#10	**4**	**Muskingum K:**					**0.587**
#10	5	8. Large gullies, diversions, and low flowing streams	0.69	44.00	6,399.00	2.480	0.716
#10	**5**	**Muskingum K:**					**0.716**

Stru #	SWS #	Land Flow Condition	Slope (%)	Vert. Dist. (ft)	Horiz. Dist. (ft)	Velocity (fps)	Time (hrs)
#12	2	8. Large gullies, diversions, and low flowing streams	8.24	111.00	1,347.00	8.610	0.043
#12	**2**	**Muskingum K:**					**0.043**
#12	3	8. Large gullies, diversions, and low flowing streams	8.01	109.00	1,360.00	8.490	0.044
#12	**3**	**Muskingum K:**					**0.044**
#12	4	8. Large gullies, diversions, and low flowing streams	2.24	176.00	7,866.00	4.480	0.487
#12	**4**	**Muskingum K:**					**0.487**
#12	5	8. Large gullies, diversions, and low flowing streams	2.24	176.00	7,866.00	4.480	0.487
#12	**5**	**Muskingum K:**					**0.487**
#13	2	8. Large gullies, diversions, and low flowing streams	1.34	54.00	4,025.00	3.470	0.322
#13	**2**	**Muskingum K:**					**0.322**
#13	3	8. Large gullies, diversions, and low flowing streams	0.98	72.00	7,333.00	2.970	0.685
#13	**3**	**Muskingum K:**					**0.685**
#13	4	8. Large gullies, diversions, and low flowing streams	1.18	127.00	10,806.00	3.250	0.923
#13	**4**	**Muskingum K:**					**0.923**
#13	5	8. Large gullies, diversions, and low flowing streams	1.18	127.00	10,806.00	3.250	0.923
#13	**5**	**Muskingum K:**					**0.923**
#14	1	8. Large gullies, diversions, and low flowing streams	0.00	0.00	0.00	0.000	0.000
#14	**1**	**Muskingum K:**					**0.000**
#14	2	8. Large gullies, diversions, and low flowing streams	0.83	58.00	6,957.00	2.730	0.707
#14	**2**	**Muskingum K:**					**0.707**
#14	3	8. Large gullies, diversions, and low flowing streams	0.81	77.00	9,480.00	2.700	0.975
#14	**3**	**Muskingum K:**					**0.975**
#14	4	8. Large gullies, diversions, and low flowing streams	0.86	147.00	17,117.00	2.770	1.716
#14	**4**	**Muskingum K:**					**1.716**
#14	5	8. Large gullies, diversions, and low flowing streams	0.88	175.00	19,934.00	2.810	1.970
#14	**5**	**Muskingum K:**					**1.970**
#14	6	8. Large gullies, diversions, and low flowing streams	0.95	211.00	22,155.00	2.920	2.107
#14	**6**	**Muskingum K:**					**2.107**
#14	7	8. Large gullies, diversions, and low flowing streams	0.96	257.00	26,835.00	2.930	2.544
#14	**7**	**Muskingum K:**					**2.544**
#14	8	8. Large gullies, diversions, and low flowing streams	0.96	257.00	26,835.00	2.930	2.544
#14	**8**	**Muskingum K:**					**2.544**

Stru #	SWS #	Land Flow Condition	Slope (%)	Vert. Dist. (ft)	Horiz. Dist. (ft)	Velocity (fps)	Time (hrs)
#14	9	8. Large gullies, diversions, and low flowing streams	0.95	307.00	32,146.59	2.930	3.047
#14	**9**	**Muskingum K:**					**3.047**
#14	10	8. Large gullies, diversions, and low flowing streams	0.96	339.00	35,382.00	2.930	3.354
#14	**10**	**Muskingum K:**					**3.354**
#15	1	8. Large gullies, diversions, and low flowing streams	0.00	0.00	0.00	0.000	0.000
#15	**1**	**Muskingum K:**					**0.000**
#15	2	8. Large gullies, diversions, and low flowing streams	1.14	86.00	7,535.00	3.200	0.654
#15	**2**	**Muskingum K:**					**0.654**
#15	3	8. Large gullies, diversions, and low flowing streams	1.25	115.00	9,236.00	3.340	0.768
#15	**3**	**Muskingum K:**					**0.768**
#16	2	8. Large gullies, diversions, and low flowing streams	0.58	24.00	4,161.00	2.270	0.509
#16	**2**	**Muskingum K:**					**0.509**
#16	3	8. Large gullies, diversions, and low flowing streams	0.51	37.00	7,269.00	2.140	0.943
#16	**3**	**Muskingum K:**					**0.943**
#17	1	8. Large gullies, diversions, and low flowing streams	0.00	0.00	0.00	0.000	0.000
#17	**1**	**Muskingum K:**					**0.000**
#18	1	8. Large gullies, diversions, and low flowing streams	0.00	0.00	0.00	0.000	0.000
#18	**1**	**Muskingum K:**					**0.000**
#18	2	8. Large gullies, diversions, and low flowing streams	1.02	62.00	6,103.00	3.020	0.561
#18	**2**	**Muskingum K:**					**0.561**
#20	2	8. Large gullies, diversions, and low flowing streams	17.00	3,605.00	21,205.88	12.360	0.476
#20	**2**	**Muskingum K:**					**0.476**
#21	1	8. Large gullies, diversions, and low flowing streams	0.00	0.00	0.00	0.000	0.000
#21	**1**	**Muskingum K:**					**0.000**
#21	2	8. Large gullies, diversions, and low flowing streams	0.41	20.00	4,824.00	1.930	0.694
#21	**2**	**Muskingum K:**					**0.694**
#21	3	8. Large gullies, diversions, and low flowing streams	0.36	20.00	5,626.00	1.780	0.877
#21	**3**	**Muskingum K:**					**0.877**
#21	4	8. Large gullies, diversions, and low flowing streams	0.36	20.00	5,626.00	1.780	0.877
#21	**4**	**Muskingum K:**					**0.877**
#23	1	8. Large gullies, diversions, and low flowing streams	0.00	0.00	0.00	0.000	0.000
#23	**1**	**Muskingum K:**					**0.000**

Stru #	SWS #	Land Flow Condition	Slope (%)	Vert. Dist. (ft)	Horiz. Dist. (ft)	Velocity (fps)	Time (hrs)
#23	2	8. Large gullies, diversions, and low flowing streams	0.63	30.00	4,771.75	2.370	0.559
#23	**2**	**Muskingum K:**					**0.559**
#24	1	8. Large gullies, diversions, and low flowing streams	0.79	180.00	22,769.00	2.660	2.377
#24	**1**	**Muskingum K:**					**2.377**
#24	2	8. Large gullies, diversions, and low flowing streams	0.78	180.00	23,111.00	2.640	2.431
#24	**2**	**Muskingum K:**					**2.431**
#24	4	8. Large gullies, diversions, and low flowing streams	0.00	0.00	0.00	0.000	0.000
#24	**4**	**Muskingum K:**					**0.000**
#25	1	8. Large gullies, diversions, and low flowing streams	1.99	104.00	5,220.00	4.230	0.342
#25	**1**	**Muskingum K:**					**0.342**
#25	2	8. Large gullies, diversions, and low flowing streams	1.99	104.00	5,220.00	4.230	0.342
#25	**2**	**Muskingum K:**					**0.342**
#25	3	8. Large gullies, diversions, and low flowing streams	0.00	0.00	0.00	0.000	0.000
#25	**3**	**Muskingum K:**					**0.000**
#27	1	8. Large gullies, diversions, and low flowing streams	1.38	216.00	15,629.00	3.520	1.233
#27	**1**	**Muskingum K:**					**1.233**
#27	2	8. Large gullies, diversions, and low flowing streams	1.17	144.00	12,301.00	3.240	1.054
#27	**2**	**Muskingum K:**					**1.054**
#27	3	8. Large gullies, diversions, and low flowing streams	1.18	76.00	6,454.00	3.250	0.551
#27	**3**	**Muskingum K:**					**0.551**
#27	4	8. Large gullies, diversions, and low flowing streams	1.18	76.00	6,454.00	3.250	0.551
#27	**4**	**Muskingum K:**					**0.551**
#28	1	8. Large gullies, diversions, and low flowing streams	1.30	84.00	6,445.17	3.420	0.523
#28	**1**	**Muskingum K:**					**0.523**
#29	1	8. Large gullies, diversions, and low flowing streams	0.88	37.00	4,210.00	2.810	0.416
#29	**1**	**Muskingum K:**					**0.416**
#29	2	8. Large gullies, diversions, and low flowing streams	0.88	26.00	2,949.00	2.810	0.291
#29	**2**	**Muskingum K:**					**0.291**
#31	1	8. Large gullies, diversions, and low flowing streams	1.35	76.00	5,639.00	3.480	0.450
#31	**1**	**Muskingum K:**					**0.450**
#31	2	8. Large gullies, diversions, and low flowing streams	1.15	20.00	1,734.00	3.220	0.149
#31	**2**	**Muskingum K:**					**0.149**

Stru #	SWS #	Land Flow Condition	Slope (%)	Vert. Dist. (ft)	Horiz. Dist. (ft)	Velocity (fps)	Time (hrs)
#34	1	8. Large gullies, diversions, and low flowing streams	0.73	65.00	8,900.00	2.560	0.965
#34	**1**	**Muskingum K:**					**0.965**
#34	2	8. Large gullies, diversions, and low flowing streams	0.73	65.00	8,900.00	2.560	0.965
#34	**2**	**Muskingum K:**					**0.965**
#36	3	8. Large gullies, diversions, and low flowing streams	2.71	80.00	2,957.00	4.930	0.166
#36	**3**	**Muskingum K:**					**0.166**
#37	2	8. Large gullies, diversions, and low flowing streams	0.29	30.00	10,319.91	1.610	1.780
#37	**2**	**Muskingum K:**					**1.780**
#37	3	8. Large gullies, diversions, and low flowing streams	0.31	30.00	9,800.71	1.650	1.649
#37	**3**	**Muskingum K:**					**1.649**
#37	4	8. Large gullies, diversions, and low flowing streams	0.29	30.00	10,319.91	1.610	1.780
#37	**4**	**Muskingum K:**					**1.780**
#37	5	8. Large gullies, diversions, and low flowing streams	0.56	100.00	17,956.54	2.230	2.236
#37	**5**	**Muskingum K:**					**2.236**

Copyright 1998 Pamela J. Schwab

General Information

Storm Information:

Storm Type:	Type II-60
Design Storm:	25 yr - 6 hr
Rainfall Depth:	1.600 inches

Structure Summary:

	Immediate Contributing Area (ac)	Total Contributing Area (ac)	Peak Discharge (cfs)	Total Runoff Volume (ac-ft)
#30	476.400	476.400	20.29	4.54
#28	1,217.900	1,217.900	424.40	68.00
#26	2,486.400	2,486.400	99.26	38.78
#24	8,061.800	8,061.800	143.61	112.28
#25	1,015.700	9,077.500	147.45	138.55
#27	1,783.700	13,347.600	319.11	223.74
#29	966.000	15,531.500	673.55	344.54
#32	293.700	16,301.600	697.34	369.21
#31	957.100	957.100	395.36	62.12
#33	0.000	17,258.700	785.16	431.33
#34	932.500	18,191.200	818.88	481.33
#5	2,023.000	2,023.000	540.04	94.54
#6	1,743.200	3,766.200	575.19	181.93
#7	2,395.300	6,161.500	982.59	341.46
#8	0.000	6,161.500	982.59	341.46
#10	1,053.200	7,214.700	1,026.78	400.15
#1	2,411.100	2,411.100	450.10	89.93
#2	1,497.000	3,908.100	539.84	181.84
#3	862.700	4,770.800	673.76	226.50
#4	0.000	4,770.800	673.76	226.50
#9	425.500	5,196.300	707.87	255.01
#11	0.000	12,411.000	1,567.95	655.16
#21	1,080.800	13,491.800	1,637.22	712.16
#18	848.500	848.500	210.88	42.35
#17	182.200	182.200	128.80	12.48
#19	0.000	1,030.700	301.55	54.83
#15	1,992.700	1,992.700	484.43	95.22
#12	3,494.500	3,494.500	276.49	72.29
#13	2,720.700	6,215.200	528.75	128.90
#14	5,096.800	11,312.000	706.02	346.80
#16	876.500	14,181.200	1,014.86	501.20
#20	681.900	15,893.800	1,080.51	600.87
#22	0.000	29,385.600	2,595.82	1,313.03
#23	752.900	30,138.500	2,593.51	1,351.53
#35	0.000	48,329.700	3,267.78	1,832.86
#36	891.700	49,221.400	3,263.49	1,865.82
#37	2,208.500	51,429.900	3,234.48	1,949.23

General Information

Storm Information:

Storm Type:	Type II-60
Design Storm:	50 yr - 6 hr
Rainfall Depth:	1.800 inches

Structure Summary:

	Immediate Contributing Area (ac)	Total Contributing Area (ac)	Peak Discharge (cfs)	Total Runoff Volume (ac-ft)
#30	476.400	476.400	32.83	6.99
#28	1,217.900	1,217.900	525.53	83.61
#26	2,486.400	2,486.400	143.85	55.25
#24	8,061.800	8,061.800	208.85	162.63
#25	1,015.700	9,077.500	214.09	197.55
#27	1,783.700	13,347.600	423.24	314.60
#29	966.000	15,531.500	856.40	463.26
#32	293.700	16,301.600	887.94	494.50
#31	957.100	957.100	482.72	75.24
#33	0.000	17,258.700	973.26	569.73
#34	932.500	18,191.200	1,013.26	631.43
#5	2,023.000	2,023.000	673.75	118.20
#6	1,743.200	3,766.200	718.40	226.70
#7	2,395.300	6,161.500	1,214.13	419.42
#8	0.000	6,161.500	1,214.13	419.42
#10	1,053.200	7,214.700	1,264.38	491.32
#1	2,411.100	2,411.100	576.49	114.84
#2	1,497.000	3,908.100	683.05	226.67
#3	862.700	4,770.800	828.28	281.95
#4	0.000	4,770.800	828.28	281.95
#9	425.500	5,196.300	868.93	316.37
#11	0.000	12,411.000	1,927.22	807.69
#21	1,080.800	13,491.800	2,011.10	878.14
#18	848.500	848.500	267.05	52.51
#17	182.200	182.200	155.60	15.04
#19	0.000	1,030.700	366.68	67.55
#15	1,992.700	1,992.700	608.76	118.63
#12	3,494.500	3,494.500	379.69	99.03
#13	2,720.700	6,215.200	721.87	176.27
#14	5,096.800	11,312.000	942.87	450.84
#16	876.500	14,181.200	1,258.26	640.88
#20	681.900	15,893.800	1,337.03	762.67
#22	0.000	29,385.600	3,203.79	1,640.81
#23	752.900	30,138.500	3,200.38	1,688.52
#35	0.000	48,329.700	4,045.08	2,319.96
#36	891.700	49,221.400	4,039.79	2,362.07
#37	2,208.500	51,429.900	4,005.46	2,468.74

General Information

Storm Information:

Storm Type:	Type II-60
Design Storm:	100 yr - 6 hr
Rainfall Depth:	2.000 inches

Structure Summary:

	Immediate Contributing Area (ac)	Total Contributing Area (ac)	Peak Discharge (cfs)	Total Runoff Volume (ac-ft)
#30	476.400	476.400	48.15	9.85
#28	1,217.900	1,217.900	630.72	99.84
#26	2,486.400	2,486.400	194.88	73.81
#24	8,061.800	8,061.800	283.23	219.79
#25	1,015.700	9,077.500	289.91	264.16
#27	1,783.700	13,347.600	536.81	416.52
#29	966.000	15,531.500	1,051.27	594.15
#32	293.700	16,301.600	1,091.37	632.47
#31	957.100	957.100	573.16	88.75
#33	0.000	17,258.700	1,188.90	721.22
#34	932.500	18,191.200	1,217.27	795.10
#5	2,023.000	2,023.000	815.52	143.06
#6	1,743.200	3,766.200	868.02	273.64
#7	2,395.300	6,161.500	1,455.93	500.51
#8	0.000	6,161.500	1,455.93	500.51
#10	1,053.200	7,214.700	1,512.16	586.13
#1	2,411.100	2,411.100	711.39	141.39
#2	1,497.000	3,908.100	834.50	273.80
#3	862.700	4,770.800	988.87	340.16
#4	0.000	4,770.800	988.87	340.16
#9	425.500	5,196.300	1,036.48	380.66
#11	0.000	12,411.000	2,314.22	966.80
#21	1,080.800	13,491.800	2,400.12	1,051.28
#18	848.500	848.500	326.50	63.15
#17	182.200	182.200	182.95	17.67
#19	0.000	1,030.700	433.80	80.82
#15	1,992.700	1,992.700	740.10	143.20
#12	3,494.500	3,494.500	493.90	128.59
#13	2,720.700	6,215.200	935.07	228.65
#14	5,096.800	11,312.000	1,201.98	563.09
#16	876.500	14,181.200	1,513.07	790.26
#20	681.900	15,893.800	1,605.07	934.99
#22	0.000	29,385.600	3,839.19	1,986.27
#23	752.900	30,138.500	3,834.77	2,043.61
#35	0.000	48,329.700	4,859.19	2,838.72
#36	891.700	49,221.400	4,853.45	2,890.59
#37	2,208.500	51,429.900	4,813.30	3,022.02

Cottonwood Crossing As-built Drawings

Cottonwood Arroyo Crossing - Haul Rd

BNCC - Area IV Expansion

As - Built Drawings

RECORD DRAWING CERTIFICATION

The Record Drawing information shown hereon reflect field changes as recorded by the Contractor, and is correct to the best of my knowledge and belief.

David L. Eberhart — NAME

4.27.2009 — DATE

DAVID L. EBERHART
NEW MEXICO
14290
PROFESSIONAL ENGINEER

bhpbilliton

BHP Navajo Coal Co.

300 W. Arrington, Suite 200
Farmington, NM 87401
Tel: (505) 598-3312

Ames Construction, Inc.

3410 E. University Dr.
Suite #380
Phoenix, AZ 85034
Tel: (602) 431-2111

COTTONWOOD ARROYO CROSSING
CONSTRUCTION PLANS
MAY 2007

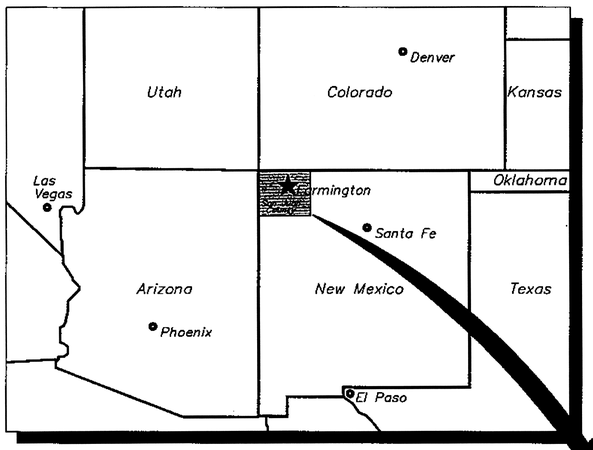

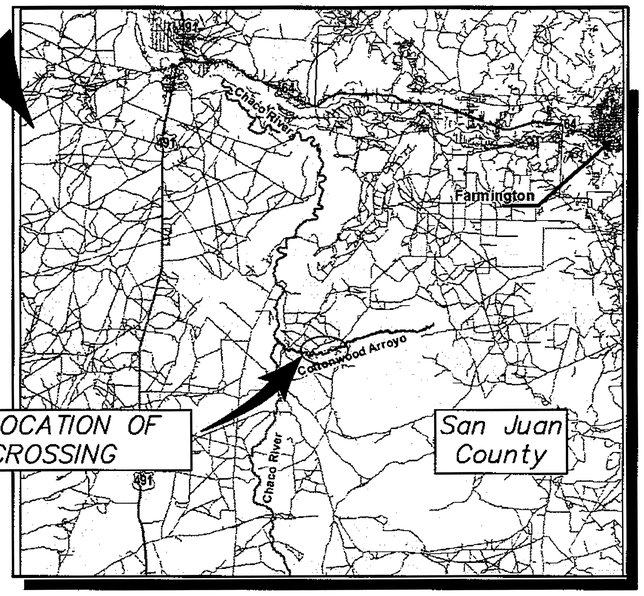

APPROXIMATE LOCATION OF PROPOSED CROSSING

LIST OF DRAWINGS

DRAWING NO.	DRAWING TITLE
C-1	TITLE SHEET AND PROJECT LOCATION MAP
C-2	SITE PLAN
C-3	TYPICAL ROADWAY SECTION
C-4	PAVEMENT SECTIONS
C-5	HAUL ROAD PLAN AND PROFILE
C-6	GUARDRAIL AT CULVERT DETAIL
C-7	TYPICAL ROADWAY CROSS SECTIONS (SHEET 7 DELETED)
C-8	TYPICAL ROADWAY CROSS SECTIONS (SHEET 8 DELETED)
C-9	METAL BARRIER W-BEAM DETAILS (NMDOT # 606-01-1/4)
C-10	METAL BARRIER POSTS AND BLOCKS (NMDOT # 606-01-3/4)
C-11	METAL BARRIER COMPONENTS (NMDOT 606-01-4/4)
C-12	CURVED GUARD RAIL TYPE B END ANCHOR (NMDOT 606-06-2/3)
D-1	CULVERT PLAN AND PROFILE
D-2	CULVERT GRADING PLAN
D-3	GABION ARMORING DETAIL
D-4	GABION AND EROSION CONTROL DETAILS
S-1	BOX CULVERT STRUCTURAL PLAN
S-2	BOX CULVERT DETAILS
S-3	EXCAVATION AND BACKFILL FOR WALLS AND CBC'S (NMDOT # 210-01-1/1)
S-4	WINGWALLS FOR PIPE OR BOX CULVERTS (CDOT # M-601-20)

KENT W. WHITMAN NEW MEXICO 6170 REGISTERED PROFESSIONAL ENGINEER

BARRY T. CHUNG NEW MEXICO 15471 LICENSED PROFESSIONAL ENGINEER

DONALD T. LOPEZ NEW MEXICO 5122 REGISTERED PROFESSIONAL ENGINEER

PREPARED FOR:

BHP Navajo Coal Company
300 W. Arrington, Suite 200
Farmington, NM 87401
Tel: (505) 598-3312
Fax: (505) 598-3361

RECORD DRAWING CERTIFICATION

The Record Drawing information shown hereon reflect field changes as recorded by the Contractor, and is correct to the best of my knowledge and belief.

David L. Eberhart 4-27-09
NAME DATE

DAVID L. EBERHART NEW MEXICO 14290 PROFESSIONAL ENGINEER

PREPARED BY:

URS

URS CORPORATION
6501 Americas Parkway, NE
Suite 900
Albuquerque, NM 87110
Tel: (505)855-7500
Fax: (505)855-7555

FIGURE No :	REV
C-1	0

C-1 Cover Sheet.dwg

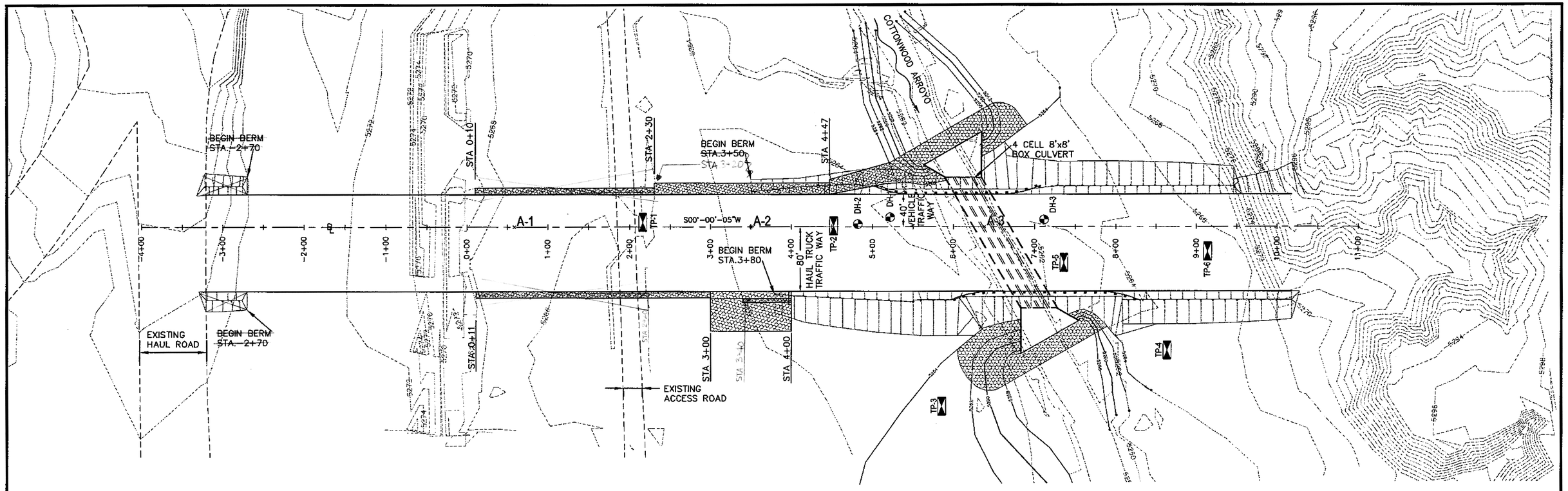

LEGEND

5255	EXISTING TOPOGRAPHY– IN FEET
TP-2	TEST PIT LOCATION
DH-1	DRILL HOLE LOCATION
℄	BASELINE
	GABION ARMORING
	BERM

CONTROL POINT LISTING			
POINT NO.	EASTING	NORTHING	ELEVATION
CENTERLINE STATIONS AT FINAL GRADE			
A–1 (STA 0+58.50)	299,760.000	2,008,778.500	5,273.000
A–2 (STA 3+50.00)	299,760.000	2,008,487.000	5,266.000
A–3 (STA 6+41.50)	299,760.000	2,008,195.500	5,273.000

NOTES: 1. OWNERS SURVEYORS WILL RE–ESTABLISH CONTROL POINTS

2. COORDINATES LISTED ARE A LOCAL SYSTEM BASED ON THIS MONUMENTATION

NOTES:

GENERAL

1. EXISTING GROUND TOPOGRAPHY AND CONTOURS WITHIN SITE PLAN LIMITS SHOWN ON THIS DRAWING ARE BASED ON 2004 GROUND SURVEY PROVIDED BY BNCC. TOPOGRAPHY OUTSIDE THESE LIMITS ARE UNKNOWN.

2. COORDINATES AND ELEVATIONS FROM THE 2004 BNCC GROUND SURVEY ARE BASED ON BNCC MINE SURVEY CONTROL AND DATUM. THE CONTRACTOR SHALL CONFIRM ALL COORDINATES AND ELEVATIONS AND ENSURE TIE–IN OF THIS PROJECT WITH THE BNCC SURVEY CONTROL AND DATUM PRIOR TO CONSTRUCTION.

3. EXISTING GROUND TOPOGRAPHY AND CONTOURS USED TO DEVELOP THE DESIGN OF THE ROADWAY TIE–IN AT STA –3+38 HAVE BEEN BASED ON EXTRAPOLATED AERIAL TOPOGRAPHY INFORMATION PROVIDED BY BNCC. THE CONTRACTOR SHALL CONFIRM THE EXISTING GROUND CONTOURS AT THIS LOCATION PRIOR TO CONSTRUCTION. ANY DISCREPANCIES SHALL BE BROUGHT TO THE ATTENTION OF THE PROJECT MANAGER FOR RESOLUTION.

CONSTRUCTION

1. NEW MEXICO DEPARTMENT OF TRANSPORTATION 2005 INTERIM SPECIFICATIONS FOR HIGHWAY AND BRIDGE CONSTRUCTION SHALL APPLY.

GEOTECHNICAL DATA

1. FOR BORELOG AND TEST PIT GEOTECHNICAL INFORMATION REFER TO THE DESIGN REPORT.

ESTIMATED QUANTITIES

ITEM NO.	DESCRIPTION OF ITEM	UNIT	ESTIMATE
203000	CUT AND FILL WITHIN PROJECT BOUNDARIES	CU. YD.	57516
203100	CUT AND FILL FROM STOCK PILE	CU. YD.	14948
207000	SUB–GRADE PREPARATION	CU. YD.	13058
304000	SUB–BASE	CU. YD.	16323
304100	BASE COURSE	CU. YD.	6529
400000	WEARING COURSE	CU. YD.	3014
511200	STRUCTURAL REINFORCED CONCRETE, CLASS AA	CU. YD.	204
517000	PRECAST CONCRETE BOX CULVERT	LIN. FT.	1582
602000	GABIONS	CU. YD.	860
602000A	GABION MATTRESSES (CULVERT)	CU. YD.	820
606100	DOUBLE METAL BARRIER W–BEAM	LIN. FT.	368
668100	GEOGRID BX 1200	SQ. FT.	352560

SCALE

60' 0 60' 120'

CONTOUR INTERVAL 2' FT.

DAVID L. EBERHART 4-27-09
NEW MEXICO 14290 PROFESSIONAL ENGINEER
Record Drawing Only

KENT W. WHITMAN NEW MEXICO 6170 REGISTERED PROFESSIONAL ENGINEER

REV. No.	REVISIONS	DATE	DESIGN BY	DRAWN BY	REVIEWED AND SIGNED BY
O	ISSUED FOR CONSTRUCTION	05/07	BTC	JAK	KMW
A	ISSUED FOR PERMITTING	12/04	MWH	JTU	AHR

BHP Navajo Coal Co.

PROJECT: BNCC – AREA IV EXPANSION

DRAWING TITLE: COTTONWOOD ARROYO CROSSING SITE PLAN

URS

URS CORPORATION
6501 AMERICAS PARKWAY, NE
SUITE 900
ALBUQUERQUE, NEW MEXICO 87110

Sheet 2 Of 20 Sheets

SCALE: AS NOTED

C-2

FILE: C-2 Plan View.dwg PROJECT NUMBER: 24342727

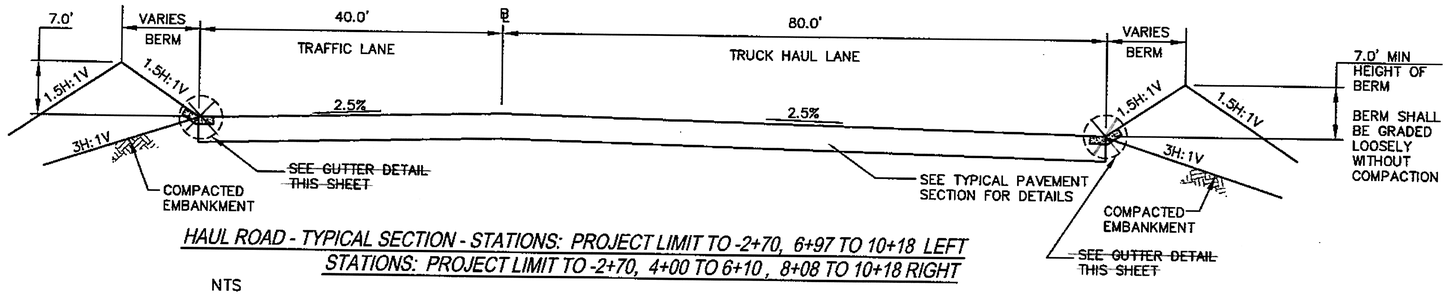

HAUL ROAD - TYPICAL SECTION - STATIONS: PROJECT LIMIT TO -2+70, 6+97 TO 10+18 LEFT
STATIONS: PROJECT LIMIT TO -2+70, 4+00 TO 6+10 , 8+08 TO 10+18 RIGHT

NTS

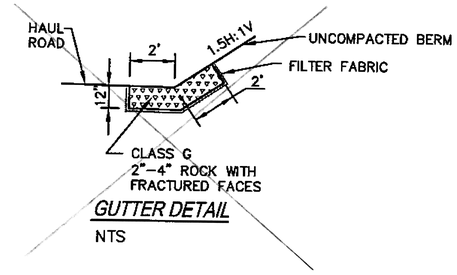

GUTTER DETAIL

NTS

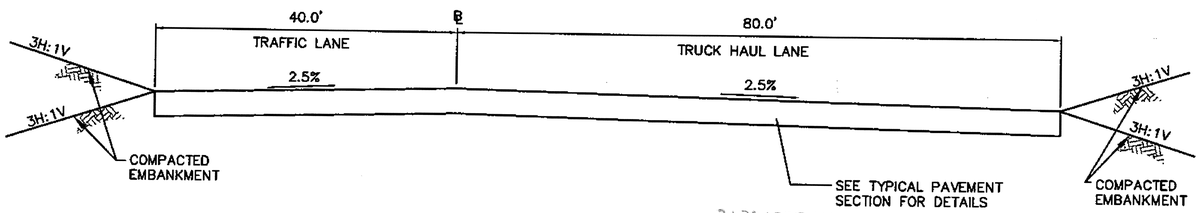

HAUL ROAD - TYPICAL SECTION - STATIONS -2+70 TO ~~0+10 LEFT AND RIGHT~~ 2+30 LEFT AND 2+20 RIGHT

NTS

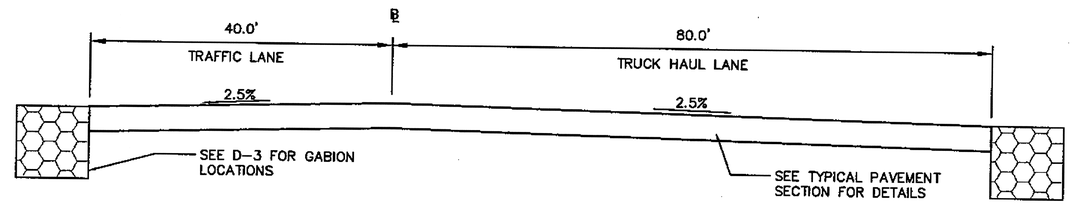

HAUL ROAD - TYPICAL SECTION - ~~STATIONS 0+10 TO 3+50 LEFT~~
STATIONS ~~0+10~~ TO 3+80 RIGHT 2+20

NTS

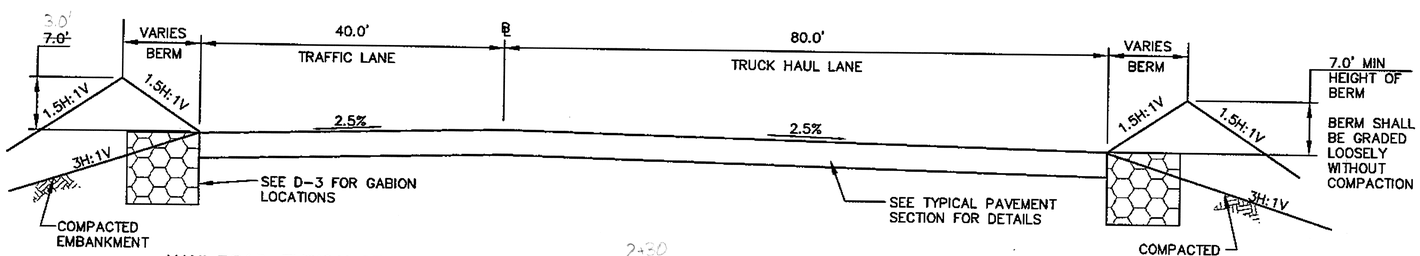

HAUL ROAD - TYPICAL SECTION AT BERM - STATIONS ~~3+50~~ 2+50 TO 5+00 LEFT, STATIONS 3+80 TO 4+00 RIGHT

NTS

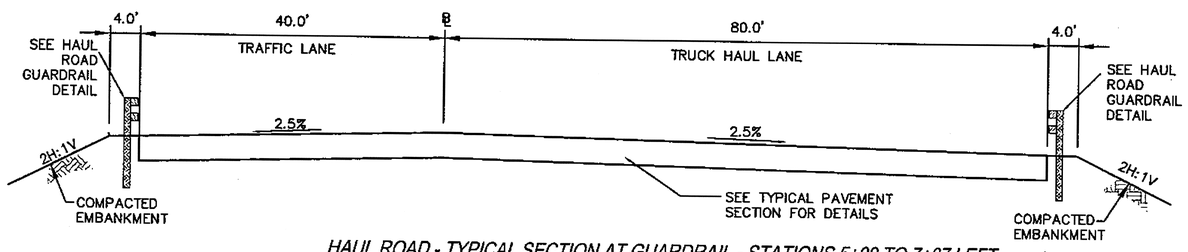

HAUL ROAD - TYPICAL SECTION AT GUARDRAIL - STATIONS 5+00 TO 7+07 LEFT
STATIONS 6+00 TO 8+28 RIGHT

NTS

LEGEND

GABION ARMORING
SEE SHEET D–4

David L. Eberhart 4-27-09
DAVID L. EBERHART NEW MEXICO 14290 PROFESSIONAL ENGINEER
Record Drawing Only

KENT W. WHITMAN NEW MEXICO 6170 REGISTERED PROFESSIONAL ENGINEER

REV. No.	REVISIONS	DATE	DESIGN BY	DRAWN BY	REVIEWED AND SIGNED BY
0	ISSUED FOR CONSTRUCTION	05/07	MMA	JAK	KMW

BHP Navajo Coal Co.

PROJECT: BNCC – AREA IV EXPANSION

DRAWING TITLE: COTTONWOOD ARROYO CROSSING TYPICAL ROADWAY SECTIONS

URS CORPORATION
6501 AMERICAS PARKWAY, NE
SUITE 900
ALBUQUERQUE, NEW MEXICO 87110

Sheet 3 Of 20 Sheets

SCALE: AS NOTED

C–3

FILE: C-3 TYP Sections.dwg PROJECT NUMBER: 24342727

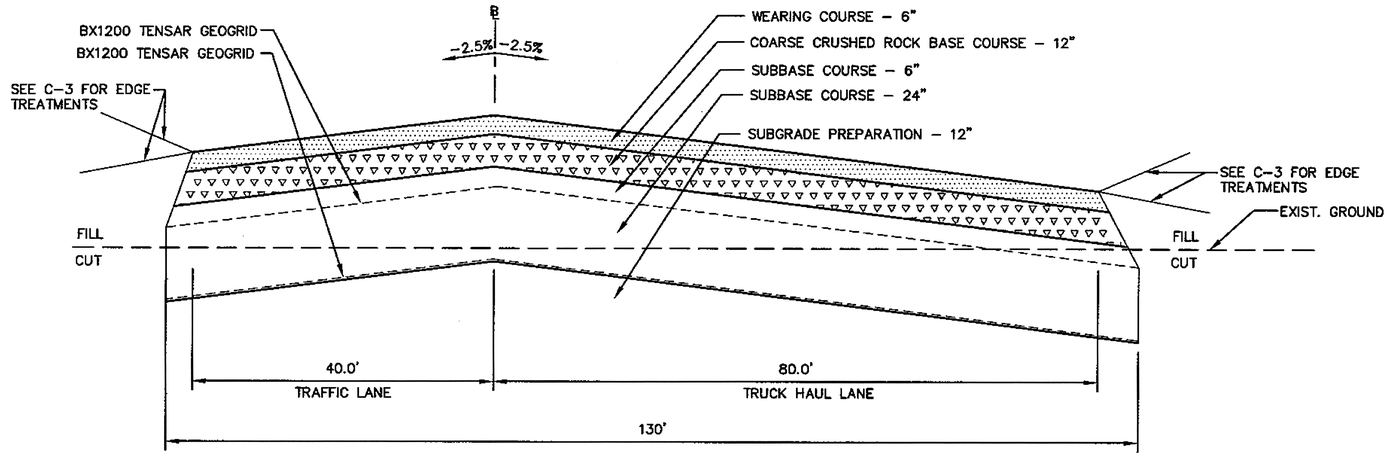

HAUL ROAD - TYPICAL PAVEMENT SECTION
NTS

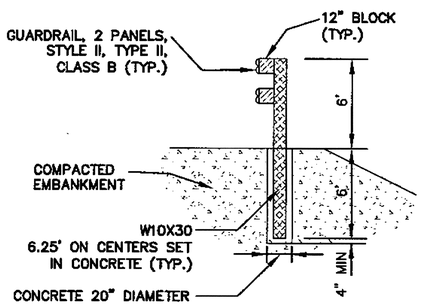

HAUL ROAD GUARDRAIL DETAIL
NTS

David L. Eberhart 4-27-09
DAVID L. EBERHART NEW MEXICO 14290 PROFESSIONAL ENGINEER
Record Drawing Only

REV. No.	REVISIONS	DATE	DESIGN BY	DRAWN BY	REVIEWED AND SIGNED BY
0	ISSUED FOR CONSTRUCTION	05/07	MMA	JAK	DTL

BHP Navajo Coal Co.

PROJECT: BNCC – AREA IV EXPANSION

DRAWING TITLE: COTTONWOOD ARROYO CROSSING PAVEMENT SECTIONS

DONALD T. LOPEZ NEW MEXICO 5122 REGISTERED PROFESSIONAL ENGINEER

URS CORPORATION
6501 AMERICAS PARKWAY, NE
SUITE 900
ALBUQUERQUE, NEW MEXICO 87110

Sheet 4 Of 20 Sheets
SCALE: AS NOTED
C-4

FILE: C-4 Misc Pavement Sections.dwg PROJECT NUMBER: 24342727

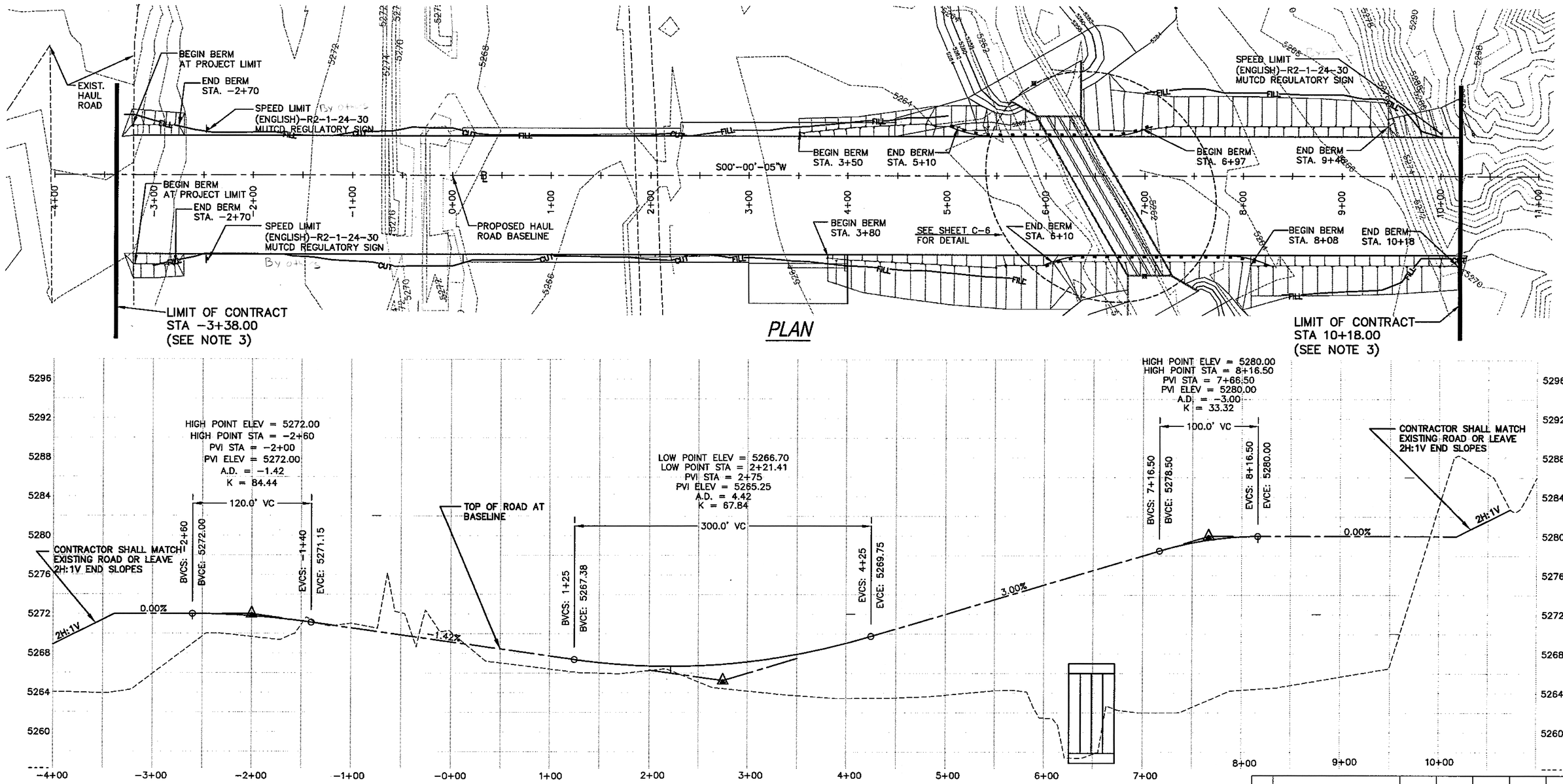

NOTES:

1. SEE SHT C−2 FOR NOTES.
2. LOW POINT ON HAUL ROAD PROFILE SHALL BE MAINTAINED TO ENSURE HAUL ROAD DOES NOT OVERTOP DURING THE 10 YEAR STORM EVENT.
3. CONTRACTOR SHALL COORDINATE WITH BNCC REGARDING TIE−IN WITH APPROACH ROAD. TIE−IN ELEVATIONS PROVIDED BY BNCC.
4. MAXIMUM TRAFFIC (ANY VEHICLE) SPEED IS 30 MPH.
5. CONTRACTOR SHALL FIELD VERIFY GUARD RAIL POSTS DO NOT CONTACT TOP OF BOX CULVERT.

PROFILE ALONG HAUL ROAD ℄

David L. Eberhart 4-27-09
DAVID L. EBERHART NEW MEXICO 14290 PROFESSIONAL ENGINEER
Record Drawing Only

SCALE
50' 0 50' 100'
CONTOUR INTERVAL 2' FT.

SCALE
0 2.5' 5'
FEET (VERTICAL)

KENT W. WHITMAN NEW MEXICO 6170 REGISTERED PROFESSIONAL ENGINEER

REV. No.	REVISIONS	DATE	DESIGN BY	DRAWN BY	REVIEWED AND SIGNED BY
0	ISSUED FOR CONSTRUCTION	05/07	EAI	JAK	KMW

BHP Navajo Coal Co.

PROJECT: BNCC − AREA IV EXPANSION

DRAWING TITLE: COTTONWOOD ARROYO CROSSING HAUL ROAD PLAN AND PROFILE

URS CORPORATION
6501 AMERICAS PARKWAY, NE
SUITE 900
ALBUQUERQUE, NEW MEXICO 87110

Sheet 5 of 20 Sheets
SCALE: AS NOTED
C−5

FILE: C−5 Haul Road Plan Profile.dwg
PROJECT NUMBER: 24342727

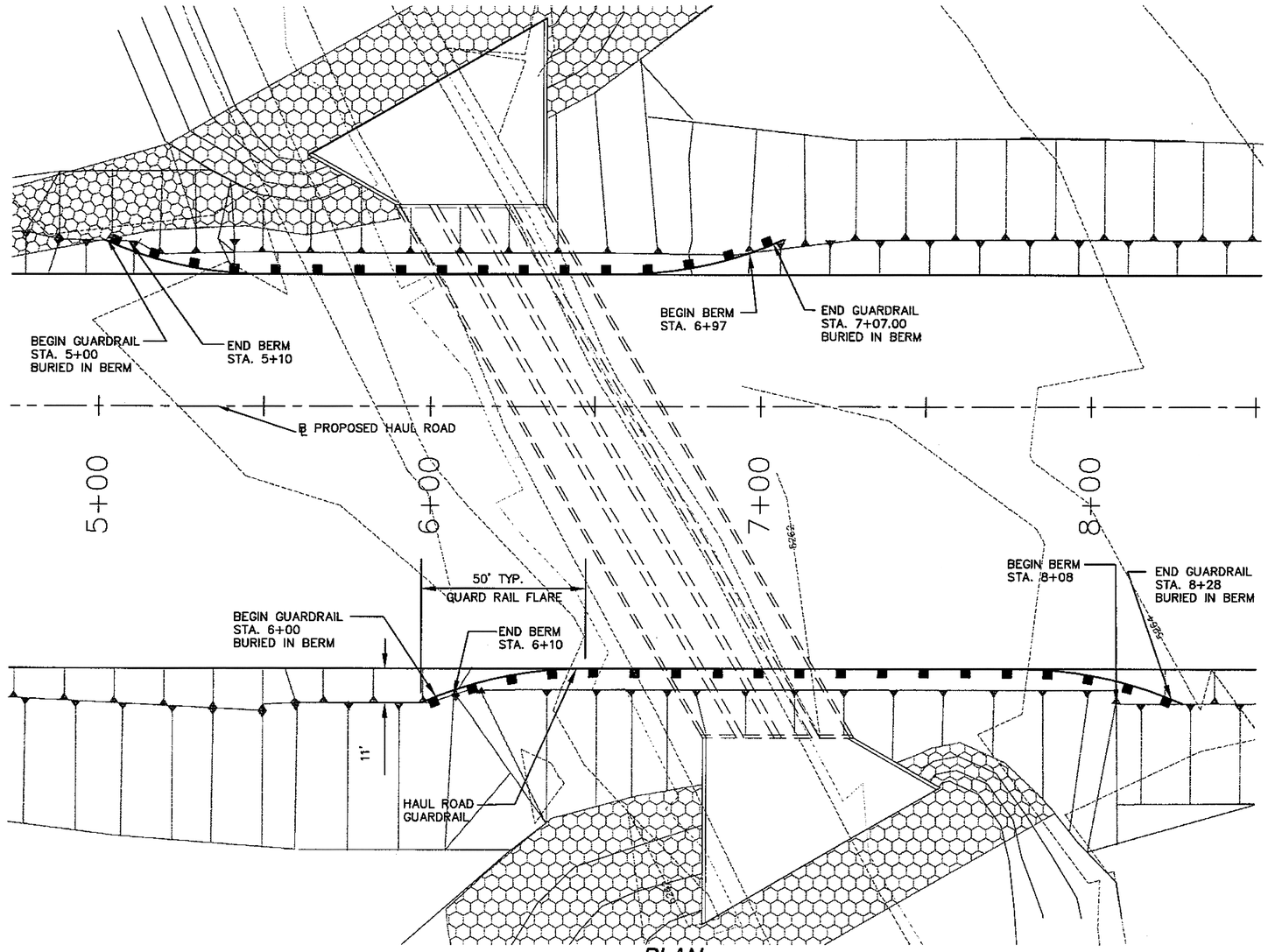

PLAN

David L. Eberhart 4-27-07
DAVID L. EBERHART
NEW MEXICO
14290
PROFESSIONAL ENGINEER
Record Drawing Only

SCALE
20' 0 20' 40'
CONTOUR INTERVAL 2' FT.

KENT W. WHITMAN
NEW MEXICO
6170
REGISTERED PROFESSIONAL ENGINEER

REV. No.	REVISIONS	DATE	DESIGN BY	DRAWN BY	REVIEWED AND SIGNED BY
0	ISSUED FOR CONSTRUCTION	05/07	EAI	JAK	KMW

BHP Navajo Coal Co.

PROJECT: BNCC – AREA IV EXPANSION

DRAWING TITLE: COTTONWOOD ARROYO CROSSING GUARDRAIL AT CULVERT DETAIL

URS

URS CORPORATION
6501 AMERICAS PARKWAY, NE
SUITE 900
ALBUQUERQUE, NEW MEXICO 87110

Sheet 6 Of 20 Sheets

SCALE: AS NOTED

C-6

FILE: C-6 Haul road culvert detail.dwg PROJECT NUMBER: 24342727

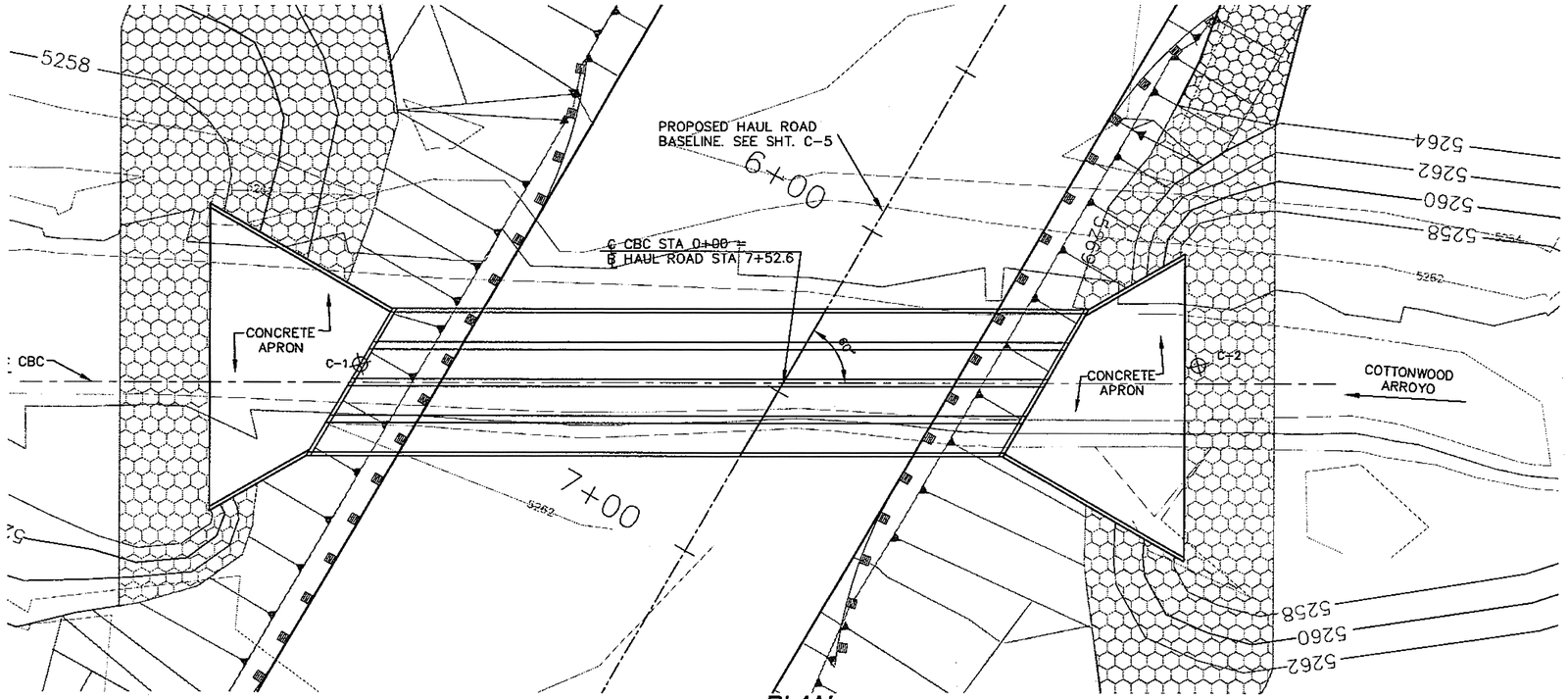

PLAN

SCALE

20' 0 20' 40'

CONTOUR INTERVAL 2' FT.

LEGEND

- 5250 — EXISTING TOPOGRAPHY- IN FEET
- CONTROL POINT
- FLOW ARROW
- EMBANKMENT FILL SLOPE
- PROPOSED GUARDRAIL
- PROPOSED ROAD CENTERLINE

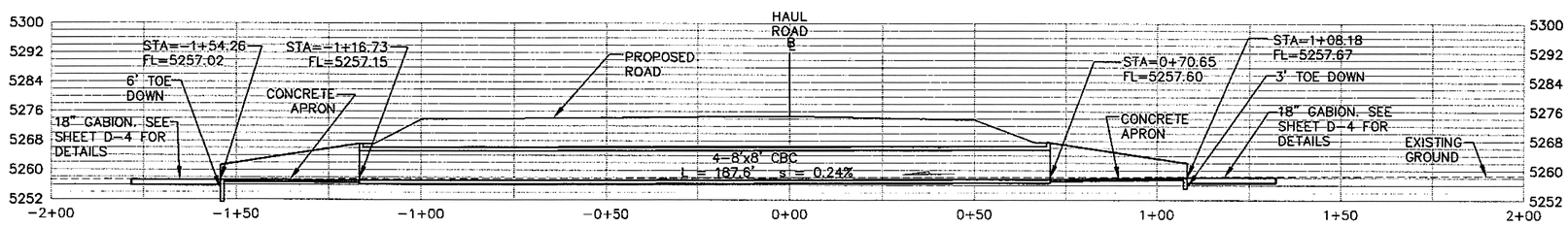

℄ PROFILE

SCALE

20' 0 20' 40'

FEET

NOTES:

1. EXISTING GROUND TOPOGRAPHY AND CONTOURS WITHIN SITE PLAN LIMITS SHOWN ON THIS DRAWING ARE BASED ON 2004 GROUND SURVEY PROVIDED BY BNCC. TOPOGRAPHY OUTSIDE THESE LIMITS ARE UNKNOWN.
2. COORDINATES AND ELEVATIONS FROM THE 2004 BNCC GROUND SURVEY ARE BASED ON BNCC MINE SURVEY CONTROL AND DATUM. THE CONTRACTOR SHALL CONFIRM ALL COORDINATES AND ELEVATIONS AND ENSURE TIE-IN OF THIS PROJECT WITH THE BNCC SURVEY CONTROL AND DATUM PRIOR TO CONSTRUCTION.
3. THE HYDROLOGIC DATA HAS BEEN FURNISHED BY BNCC, AND/OR THIRD PARTIES, WHICH WAS USED IN DESIGN PREPARATION. URS HAS RELIED ON THIS INFORMATION AS FURNISHED, AND IS NEITHER RESPONSIBLE FOR NOR HAS CONFIRMED THE ACCURACY OF THIS INFORMATION.
4. FOR PROPOSED GRADING AT THE CULVERT INLET AND OUTLET, SEE COTTONWOOD ARROYO CULVERT GRADING PLAN, SHEET D-2.
5. FOR PROPOSED EROSION PROTECTION, SEE EROSION CONTROL DETAILS SHEET D-4.
6. FOR DETAILED DIMENSIONING OF THE CONCRETE APRON, AND WINGWALLS, SEE STRUCTURAL DETAILS ON SHEETS S-1 - S-4.

ABBREVIATIONS

CBC	CONCRETE BOX CULVERT
FL	FLOWLINE ELEVATION
BL	BASELINE
STA	STATION
L	LENGTH
s	SLOPE

HYDROLOGIC & HYDRAULIC DATA
DRAINAGE AREA = 76.99 SQ. MI.
DESIGN FREQUENCY = 10 YEAR, 6 HOUR
DESIGN DISCHARGE = 2186 CFS
DESIGN SURFACE WATER (DSW) ELEV. = 5265.43
DESIGN TAILWATER ELEVATION = 5262.14
OUTLET VELOCITY = 13.01 FT/SEC
ROADWAY OVERTOPPING
HIGH WATER FREQUENCY = 50 YEAR, 6 HOUR
HIGH WATER DISCHARGE = 4040 CFS
HIGH WATER ELEVATION = 5268.37
ROADWAY FLOODING DEPTH @ BL = 1.67 FT

CONTROL POINT LISTING				
POINT NO.	HAUL ROAD		EASTING	NORTHING
	STA.	OFFSET		
C-1	7+00.00	101.09' RT	299,659.04	2,008,136.88
C-2	5+87.13	94.40' LT	299,854.53	2,008,249.75

NOTES: 1. OWNERS SURVEYORS WILL RE-ESTABLISH CONTROL POINTS

2. COORDINATES LISTED ARE A LOCAL SYSTEM BASED ON THIS MONUMENTATION

REV. NO.	REVISIONS	DATE	DESIGN BY	DRAWN BY	REVIEWED AND SIGNED BY
0	ISSUED FOR CONSTRUCTION	05/07	RLR	JAK	KMW

David L. Eberhart 4-27-07
DAVID L. EBERHART NEW MEXICO 14290 PROFESSIONAL ENGINEER
Record Drawing Only

KENT W. WHITMAN NEW MEXICO 6170 REGISTERED PROFESSIONAL ENGINEER

BHP Navajo Coal Co.

PROJECT: BNCC - AREA IV EXPANSION

DRAWING TITLE: COTTONWOOD ARROYO CULVERT PLAN AND PROFILE

URS

URS CORPORATION
6501 AMERICAS PARKWAY, NE
SUITE 900
ALBUQUERQUE, NEW MEXICO 87110

Sheet 13 Of 20 Sheets

SCALE: AS NOTED

D-1

FILE: D-1 Plan and Prof.dwg PROJECT NUMBER: 24342727

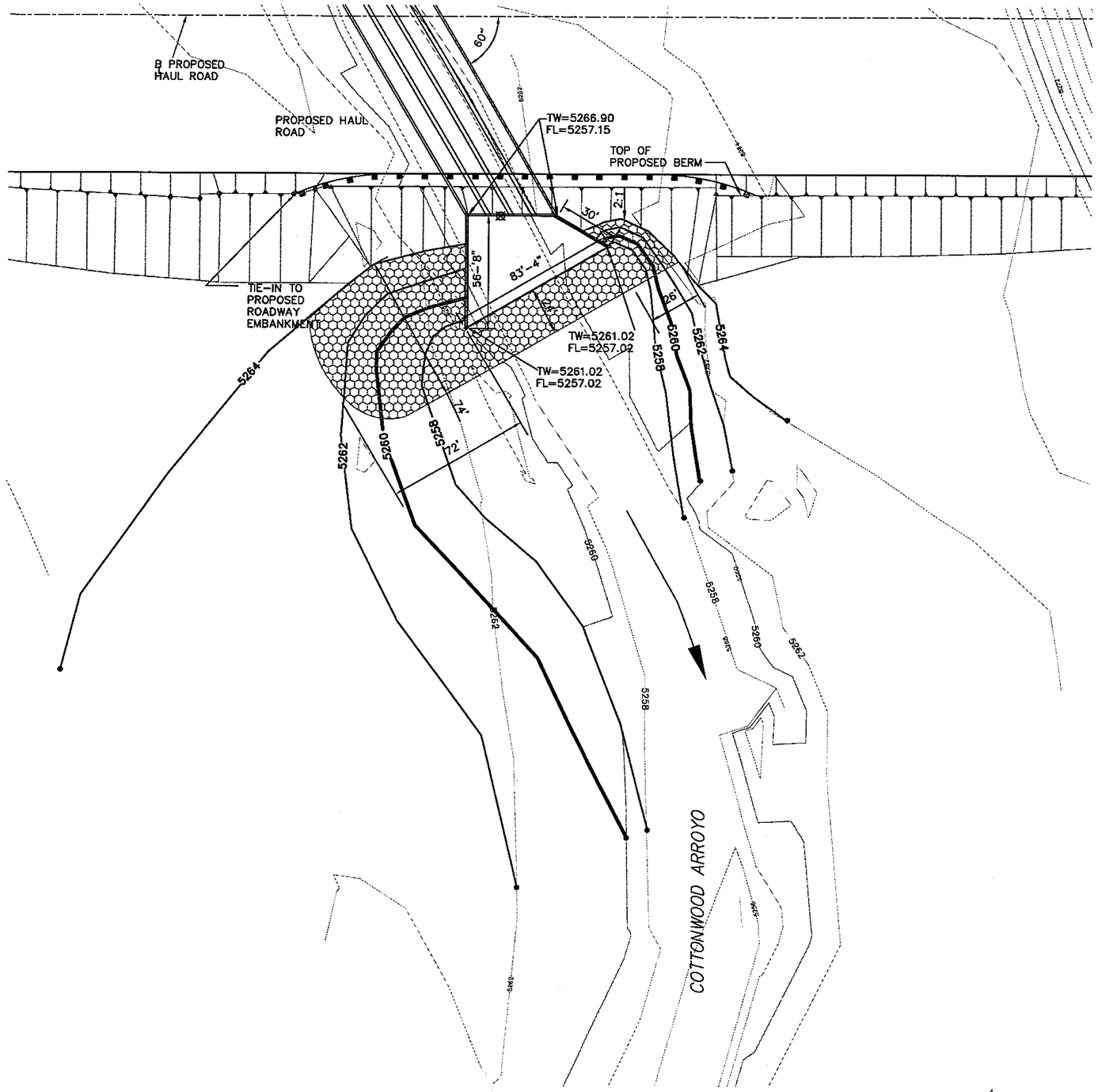

CULVERT OUTLET

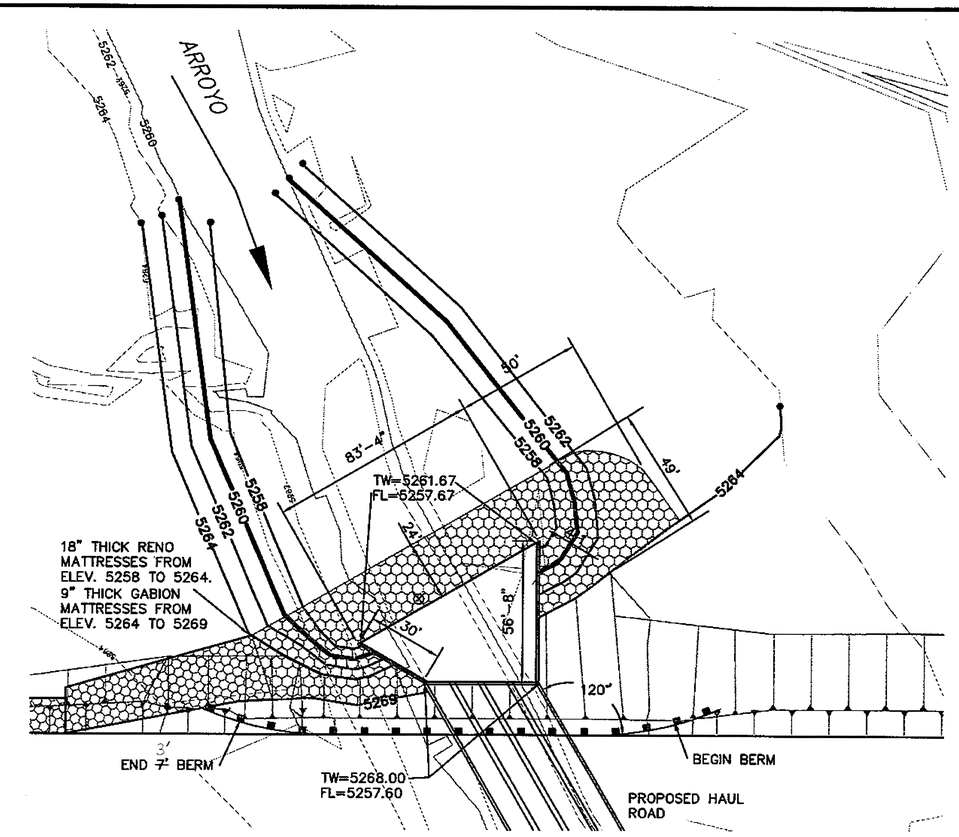

CULVERT INLET

ABBREVIATIONS

TW TOP OF WALL
FL FLOWLINE ELEVATION

LEGEND

5258 — EXISTING TOPOGRAPHY - IN FEET
5250 — PROPOSED CONTOUR - IN FEET
GABION ARMORING

BOX CULVERT GRADING PLAN

NOTES:

1. EXISTING GROUND TOPOGRAPHY AND CONTOURS WITHIN SITE PLAN LIMITS SHOWN ON THIS DRAWING ARE BASED ON 2004 GROUND SURVEY PROVIDED BY BNCC. TOPOGRAPHY OUTSIDE THESE LIMITS ARE UNKNOWN.
2. COORDINATES AND ELEVATIONS FROM THE 2004 BNCC GROUND SURVEY ARE BASED ON BNCC MINE SURVEY CONTROL AND DATUM. THE CONTRACTOR SHALL CONFIRM ALL COORDINATES AND ELEVATIONS AND ENSURE TIE-IN OF THIS PROJECT WITH THE BNCC SURVEY CONTROL AND DATUM PRIOR TO CONSTRUCTION.

SCALE
30' 0 30' 60'
CONTOUR INTERVAL 2' FT.

David L. Eberhart 4-27-09
DAVID L. EBERHART NEW MEXICO 14290 PROFESSIONAL ENGINEER
Record Drawing Only

KENT W. WHITMAN NEW MEXICO 6170 REGISTERED PROFESSIONAL ENGINEER

REV. No.	REVISIONS	DATE	DESIGN BY	DRAWN BY	REVIEWED AND SIGNED BY
0	ISSUED FOR CONSTRUCTION	05/07	RLR	JAK	KMW

BHP Navajo Coal Co.

PROJECT: BNCC – AREA IV EXPANSION

DRAWING TITLE: COTTONWOOD ARROYO CULVERT GRADING PLAN

URS CORPORATION
6501 AMERICAS PARKWAY, NE
SUITE 900
ALBUQUERQUE, NEW MEXICO 87110

Sheet 14 of 20 Sheets
SCALE: AS NOTED
D-2

FILE: D-2 GRADING.dwg PROJECT NUMBER: 24342727

NOTES:

1. EXISTING GROUND TOPOGRAPHY AND CONTOURS WITHIN SITE PLAN LIMITS SHOWN ON THIS DRAWING ARE BASED ON 2004 GROUND SURVEY PROVIDED BY BNCC. TOPOGRAPHY OUTSIDE THESE LIMITS ARE UNKNOWN.
2. COORDINATES AND ELEVATIONS FROM THE 2004 BNCC GROUND SURVEY ARE BASED ON BNCC MINE SURVEY CONTROL AND DATUM. THE CONTRACTOR SHALL CONFIRM ALL COORDINATES AND ELEVATIONS AND ENSURE TIE-IN OF THIS PROJECT WITH THE BNCC SURVEY CONTROL AND DATUM PRIOR TO CONSTRUCTION.
3. ALL STATION AND OFFSET DATA BASED ON THE PROPOSED HAUL ROAD ALIGNMENT.
4. SEE SHEET D-4 FOR CROSS SECTIONS.
5. GALVANIZED WIRE SHALL BE USED FOR GABIONS.

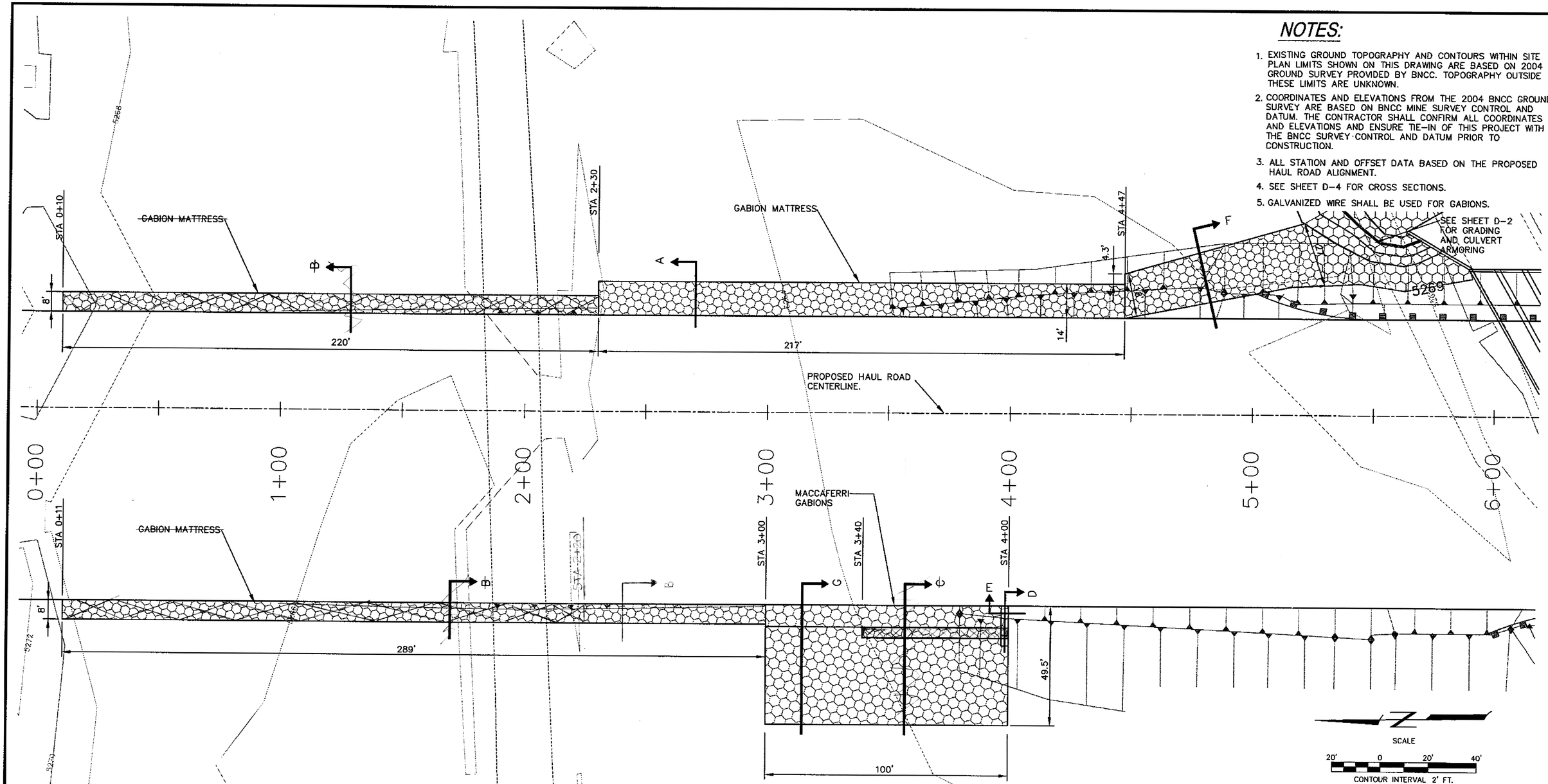

REV. No.	REVISIONS	DATE	DESIGN BY	DRAWN BY	REVIEWED AND SIGNED BY
D	ISSUED FOR CONSTRUCTION	05/07	SJ	JK	DTL

BHP Navajo Coal Co.

PROJECT: BNCC – AREA IV EXPANSION

DRAWING TITLE: COTTONWOOD ARROYO GABION ARMORING DETAIL

HAUL ROAD SOUTH APPROACH

David L. Eberhart 4-27-09
DAVID L. EBERHART NEW MEXICO 14290 PROFESSIONAL ENGINEER
Record Drawing Only

DONALD T. LOPEZ NEW MEXICO 5122 REGISTERED PROFESSIONAL ENGINEER

URS CORPORATION
5501 AMERICAS PARKWAY, NE
SUITE 900
ALBUQUERQUE, NEW MEXICO 87110

Sheet 15 of 20 Sheets
SCALE: AS NOTED
D-3

FILE: D-3 GABION detail sheet.dwg PROJECT NUMBER: 24342727

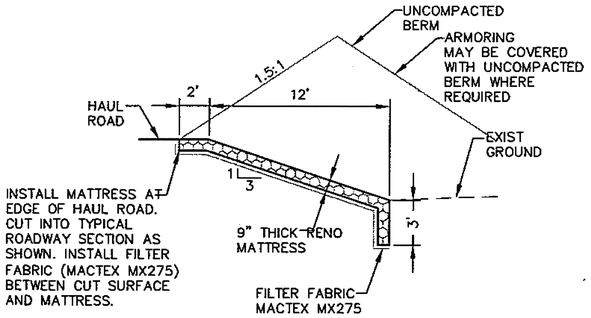

ARMORING SECTION A
STA 2+30 TO ~~4+47~~ 3+00

SCALE:
HZ 1" = 5'
VT 1" = 5'

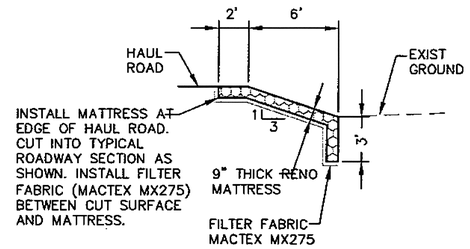

ARMORING SECTION B
~~STA. 0+10 TO 2+30 EAST~~
STA ~~0+11~~ TO 3+00 WEST

SCALE: 2+20
HZ 1" = 5'
VT 1" = 5'

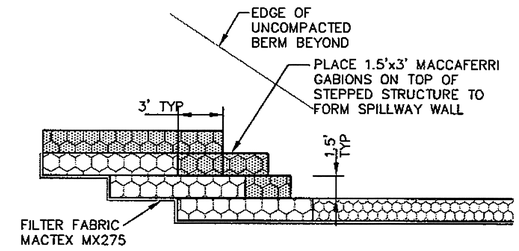

GABIONS SECTION D
SCALE:
HZ 1" = 5'
VT 1" = 5'

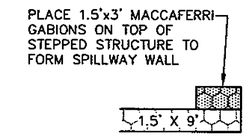

GABIONS SECTION E
SCALE:
HZ 1" = 5'
VT 1" = 5'

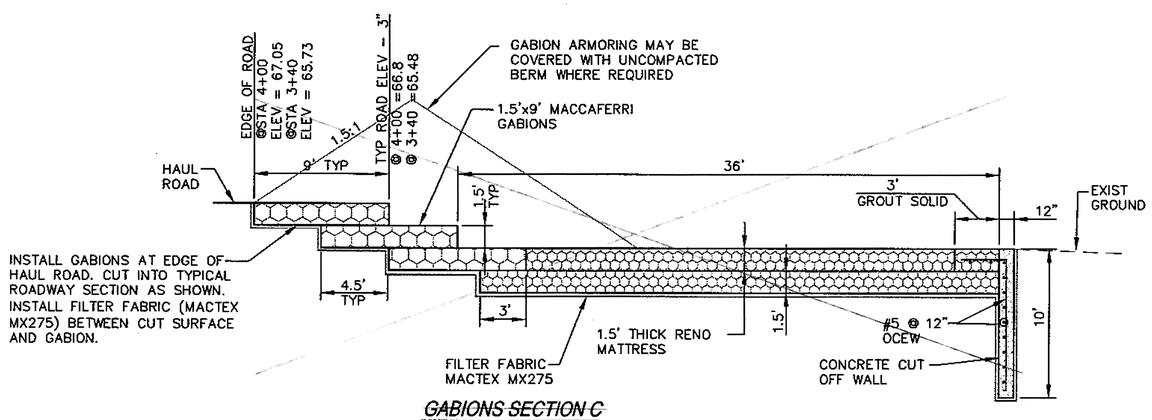

~~GABIONS SECTION C~~
~~STA 3+40 TO 4+00~~

SCALE:
HZ 1" = 5'
VT 1" = 5'

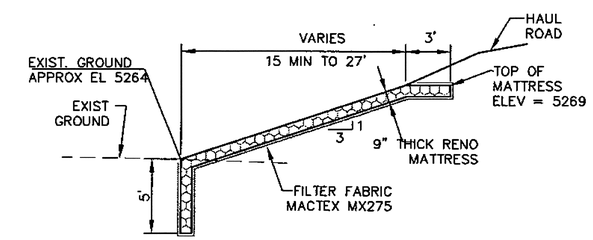

GABIONS SECTION F
STA 4+47 TO 5+62

SCALE:
HZ 1" = 5'
VT 1" = 5'

NOTES:
1. GALVANIZED WIRE SHALL BE USED FOR GABIONS.

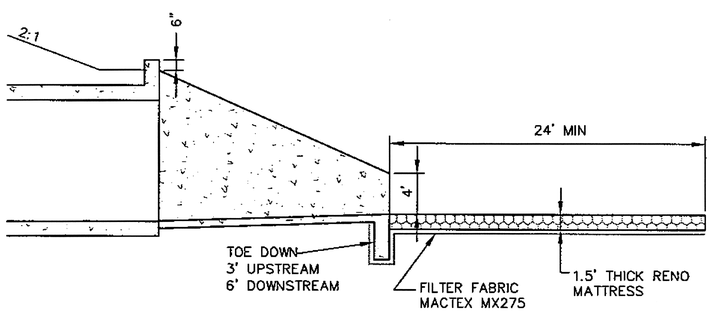

BOX CULVERTS WITH APRONS SECTION
NTS

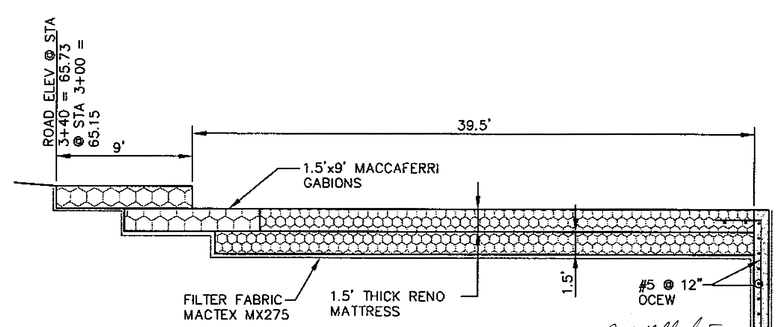

ARMORING SECTION G
STA 3+00 TO ~~3+40~~ 4+00

SCALE:
HZ 1" = 5'
VT 1" = 5'

David L. Eberhart 4-27-09
DAVID L. EBERHART NEW MEXICO 14290 PROFESSIONAL ENGINEER
Record Drawing Only

DONALD T. LOPEZ NEW MEXICO 5122 REGISTERED PROFESSIONAL ENGINEER

REV. No.	REVISIONS	DATE	DESIGN BY	DRAWN BY	REVIEWED AND SIGNED BY
0	ISSUED FOR CONSTRUCTION	05/07	SJ	JK	DTL

BHP Navajo Coal Co.

PROJECT: BNCC – AREA IV EXPANSION

DRAWING TITLE: COTTONWOOD ARROYO GABION AND EROSION CONTROL DETAILS

URS CORPORATION
5501 AMERICAS PARKWAY, NE
SUITE 900
ALBUQUERQUE, NEW MEXICO 87110

Sheet 16 of 20 Sheets
SCALE: AS NOTED
D-4

FILE: D-4 EROSION AND GABION DETAILS.dwg DRAWING NUMBER: 24342727

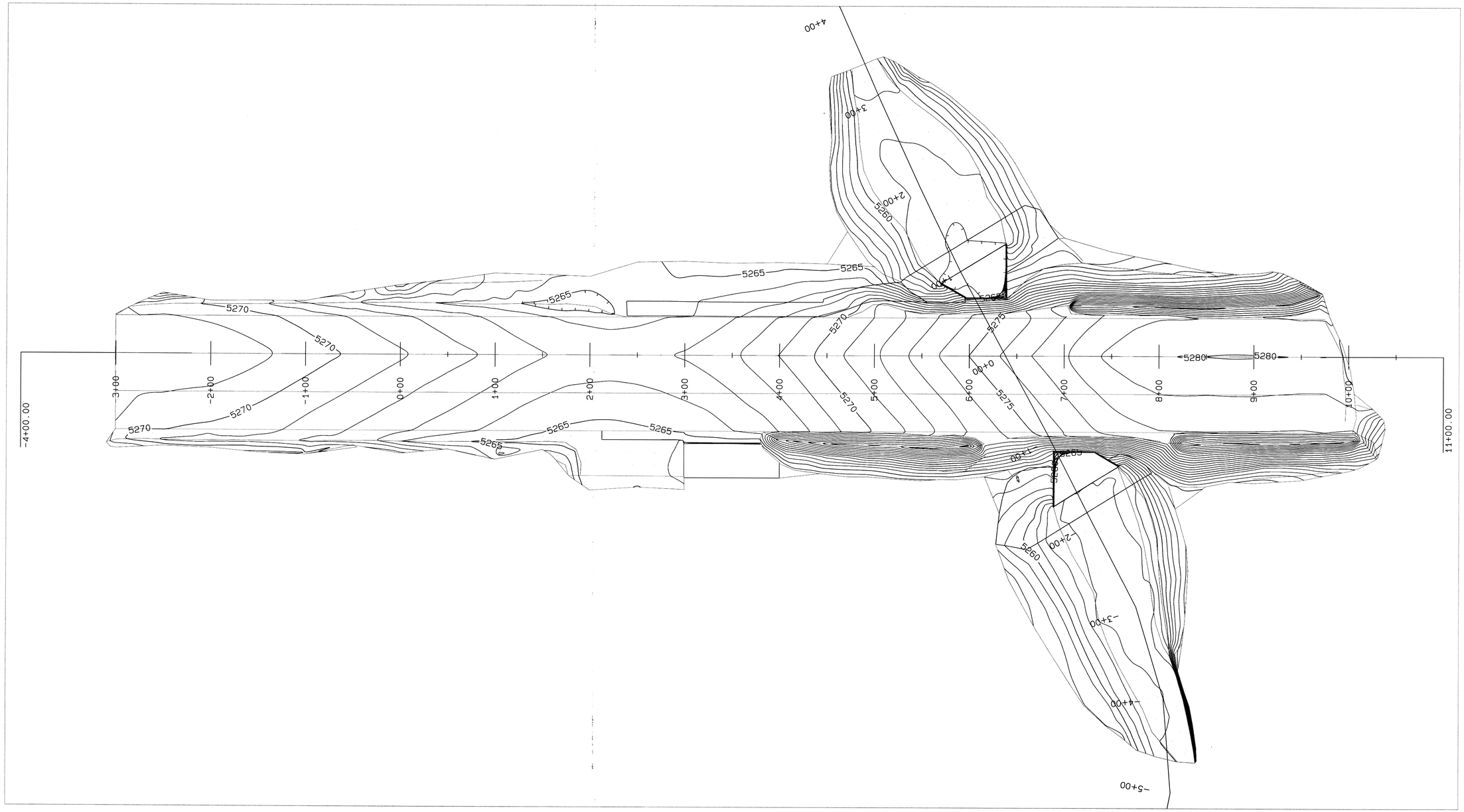

David L. Eberhart 4-27-09

DAVID L. EBERHART
NEW MEXICO
14290
PROFESSIONAL ENGINEER

Record Drawing Only

Ames Construction, Inc.

3410 E. University Dr., Suite #380, Phoenix, AZ 85034

Plan View
Scale 1:50

COTTONWOOD ARROYO CROSSING
As-Built Drawings

Project Desc:: Path: C:\Users\Mike Petko\Desktop\Documents\Job BHP - Cottonwood Crossing - NM\Job BHP - Cottonwood Crossing.pro Plot Date/Time: Thu Apr 23,2009 / 14:10:23

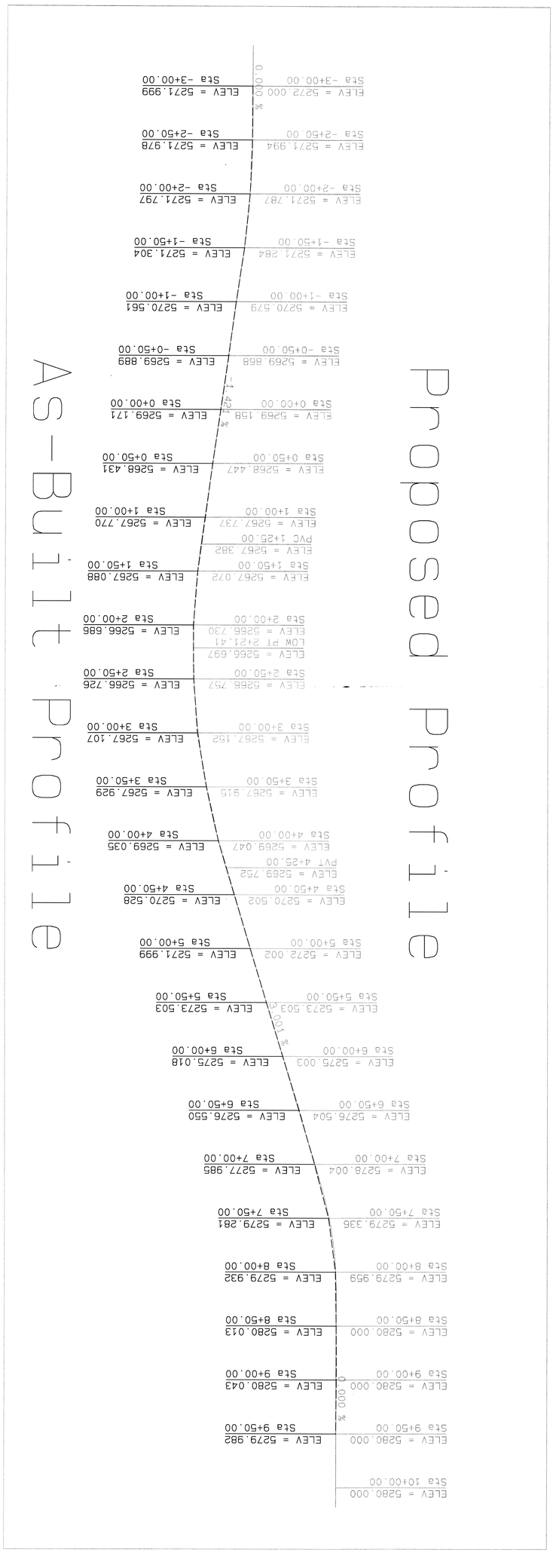

Record Drawing Only

DAVID L. EGGERT
NEW MEXICO
14290
PROFESSIONAL ENGINEER

4-27-09

COTTONWOOD ARROYO CROSSING
As-Built Drawings

Proposed and As-Built Prof
Scale 1:50

Ames Construction, Inc.
3410 E. University Dr., Suite #380, Phoenix, AZ 85034

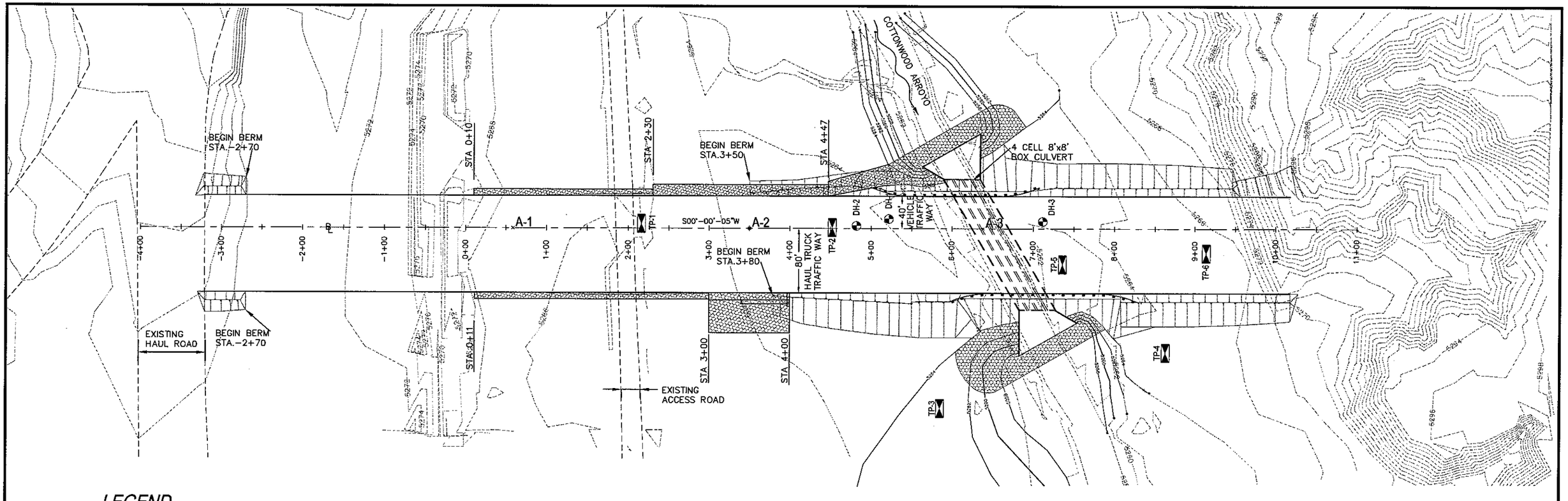

LEGEND

5256	EXISTING TOPOGRAPHY– IN FEET
TP-2	TEST PIT LOCATION
DH-1	DRILL HOLE LOCATION
℄	BASELINE
	GABION ARMORING
	BERM

CONTROL POINT LISTING			
POINT NO.	EASTING	NORTHING	ELEVATION
CENTERLINE STATIONS AT FINAL GRADE			
A–1 (STA 0+58.50)	299,760.000	2,008,778.500	5,273.000
A–2 (STA 3+50.00)	299,760.000	2,008,487.000	5,266.000
A–3 (STA 6+41.50)	299,760.000	2,008,195.500	5,273.000

NOTES: 1. OWNERS SURVEYORS WILL RE–ESTABLISH CONTROL POINTS

2. COORDINATES LISTED ARE A LOCAL SYSTEM BASED ON THIS MONUMENTATION

NOTES:

GENERAL

1. EXISTING GROUND TOPOGRAPHY AND CONTOURS WITHIN SITE PLAN LIMITS SHOWN ON THIS DRAWING ARE BASED ON 2004 GROUND SURVEY PROVIDED BY BNCC. TOPOGRAPHY OUTSIDE THESE LIMITS ARE UNKNOWN.

2. COORDINATES AND ELEVATIONS FROM THE 2004 BNCC GROUND SURVEY ARE BASED ON BNCC MINE SURVEY CONTROL AND DATUM. THE CONTRACTOR SHALL CONFIRM ALL COORDINATES AND ELEVATIONS AND ENSURE TIE–IN OF THIS PROJECT WITH THE BNCC SURVEY CONTROL AND DATUM PRIOR TO CONSTRUCTION.

3. EXISTING GROUND TOPOGRAPHY AND CONTOURS USED TO DEVELOP THE DESIGN OF THE ROADWAY TIE–IN AT STA –3+38 HAVE BEEN BASED ON EXTRAPOLATED AERIAL TOPOGRAPHY INFORMATION PROVIDED BY BNCC. THE CONTRACTOR SHALL CONFIRM THE EXISTING GROUND CONTOURS AT THIS LOCATION PRIOR TO CONSTRUCTION. ANY DISCREPANCIES SHALL BE BROUGHT TO THE ATTENTION OF THE PROJECT MANAGER FOR RESOLUTION.

CONSTRUCTION

1. NEW MEXICO DEPARTMENT OF TRANSPORTATION 2005 INTERIM SPECIFICATIONS FOR HIGHWAY AND BRIDGE CONSTRUCTION SHALL APPLY.

GEOTECHNICAL DATA

1. FOR BORELOG AND TEST PIT GEOTECHNICAL INFORMATION REFER TO THE DESIGN REPORT.

ESTIMATED QUANTITIES

ITEM NO.	DESCRIPTION OF ITEM	UNIT	ESTIMATE
203000	CUT AND FILL WITHIN PROJECT BOUNDARIES	CU. YD.	57516
203100	CUT AND FILL FROM STOCK PILE	CU. YD.	14948
207000	SUB–GRADE PREPARATION	CU. YD.	13058
304000	SUB–BASE	CU. YD.	16323
304100	BASE COURSE	CU. YD.	6529
400000	WEARING COURSE	CU. YD.	3014
511200	STRUCTURAL REINFORCED CONCRETE, CLASS AA	CU. YD.	204
517000	PRECAST CONCRETE BOX CULVERT	LIN. FT.	1582
602000	GABIONS	CU. YD.	860
602000A	GABION MATTRESSES (CULVERT)	CU. YD.	820
606100	DOUBLE METAL BARRIER W–BEAM	LIN. FT.	368
668100	GEOGRID BX 1200	SQ. FT.	352560

SCALE

60' 0 60' 120'

CONTOUR INTERVAL 2' FT.

KENT W. WHITMAN
NEW MEXICO
6170
REGISTERED PROFESSIONAL ENGINEER

REV. No.	REVISIONS	DATE	DESIGN BY	DRAWN BY	REVIEWED AND SIGNED BY
0	ISSUED FOR CONSTRUCTION	05/07	BTC	JAK	KMW
A	ISSUED FOR PERMITTING	12/04	MWH	JTU	AHR

BHP Navajo Coal Co.

PROJECT: BNCC – AREA IV EXPANSION

DRAWING TITLE: COTTONWOOD ARROYO CROSSING SITE PLAN

URS

URS CORPORATION
6501 AMERICAS PARKWAY, NE
SUITE 900
ALBUQUERQUE, NEW MEXICO 87110

Sheet 2 of 20 Sheets

SCALE: AS NOTED

C–2

FILE: C-2 Plan View.dwg PROJECT NUMBER: 24342727

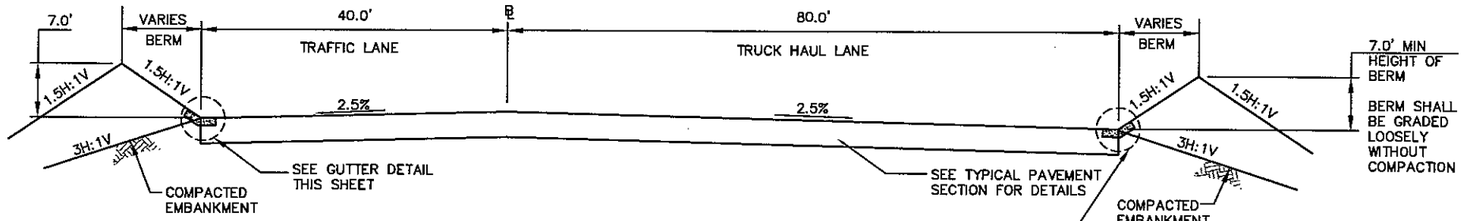

HAUL ROAD - TYPICAL SECTION - STATIONS: PROJECT LIMIT TO -2+70, 6+97 TO 10+18 LEFT
STATIONS: PROJECT LIMIT TO -2+70, 4+00 TO 6+10, 8+08 TO 10+18 RIGHT

NTS

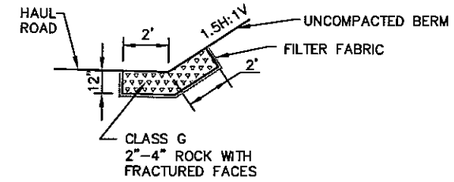

GUTTER DETAIL

NTS

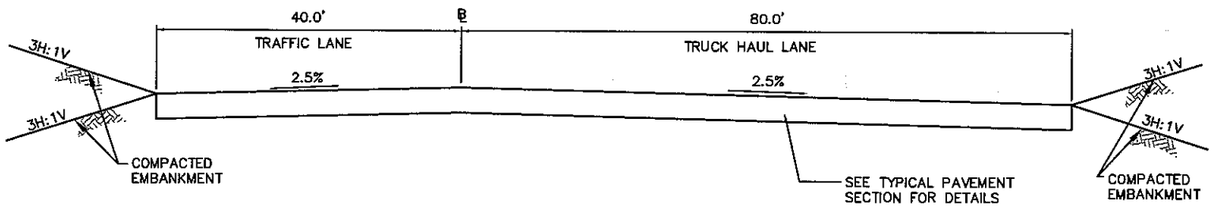

HAUL ROAD - TYPICAL SECTION - STATIONS -2+70 TO 0+10 LEFT AND RIGHT

NTS

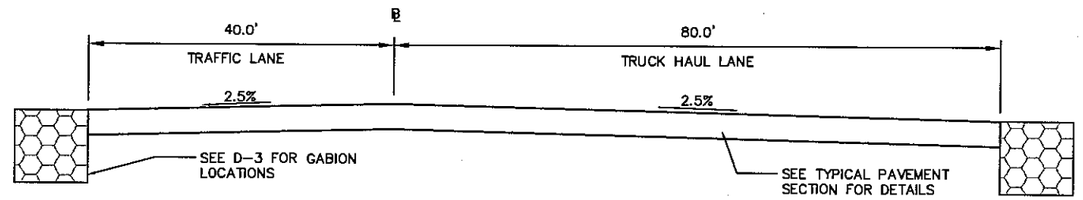

HAUL ROAD - TYPICAL SECTION - STATIONS 0+10 TO 3+50 LEFT
STATIONS 0+10 TO 3+80 RIGHT

NTS

LEGEND

GABION ARMORING
SEE SHEET D–4

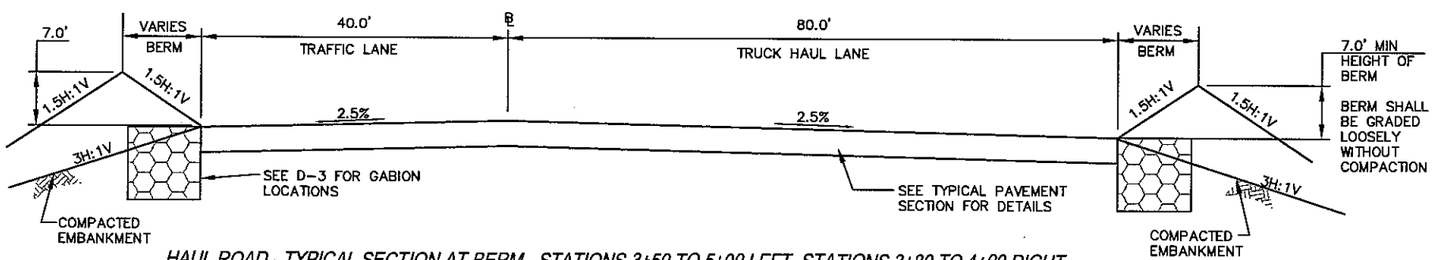

HAUL ROAD - TYPICAL SECTION AT BERM - STATIONS 3+50 TO 5+00 LEFT, STATIONS 3+80 TO 4+00 RIGHT

NTS

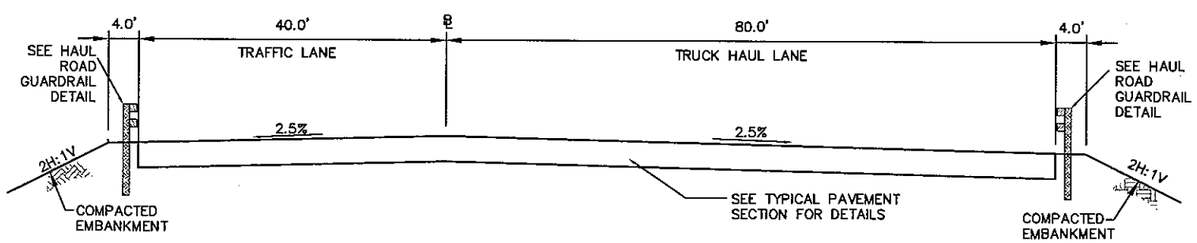

HAUL ROAD - TYPICAL SECTION AT GUARDRAIL - STATIONS 5+00 TO 7+07 LEFT
STATIONS 6+00 TO 8+28 RIGHT

NTS

REV. No.	REVISIONS	DATE	DESIGN BY	DRAWN BY	REVIEWED AND SIGNED BY
0	ISSUED FOR CONSTRUCTION	05/07	MMA	JAK	KMW

BHP Navajo Coal Co.

PROJECT: BNCC – AREA IV EXPANSION

DRAWING TITLE: COTTONWOOD ARROYO CROSSING TYPICAL ROADWAY SECTIONS

KENT W. WHITMAN NEW MEXICO 6170 REGISTERED PROFESSIONAL ENGINEER

URS

URS CORPORATION
6501 AMERICAS PARKWAY, NE
SUITE 900
ALBUQUERQUE, NEW MEXICO 87110

Sheet 3 Of 20 Sheets

SCALE: AS NOTED

C–3

FILE: C-3 TYP Sections.dwg PROJECT NUMBER: 24342727

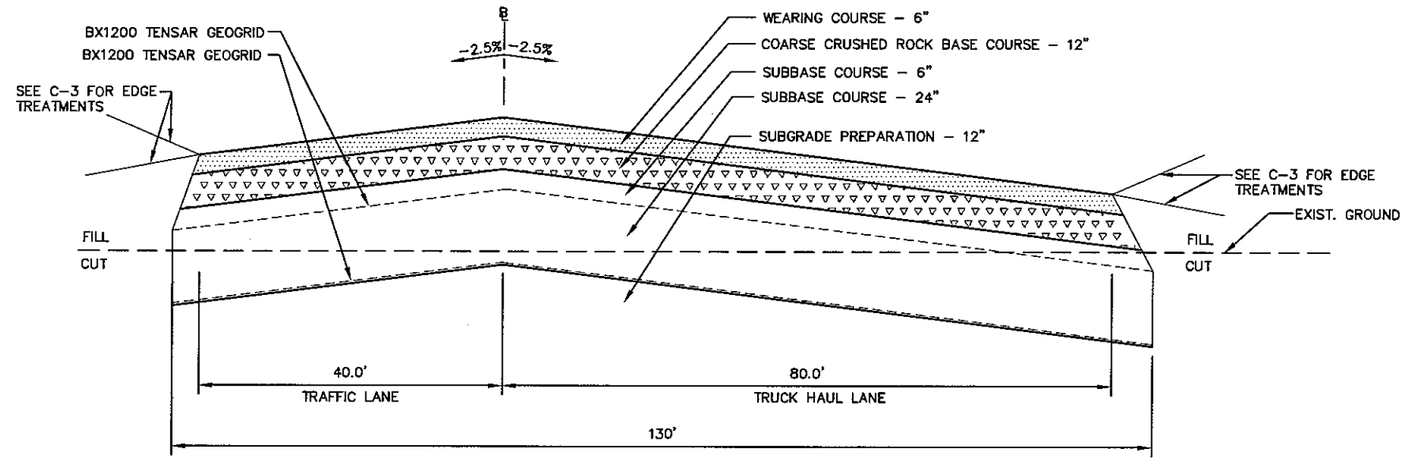

HAUL ROAD - TYPICAL PAVEMENT SECTION
NTS

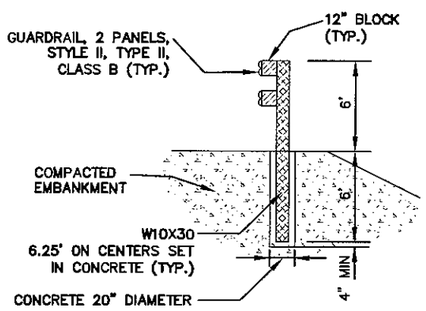

HAUL ROAD GUARDRAIL DETAIL
NTS

REV. No.	REVISIONS	DATE	DESIGN BY	DRAWN BY	REVIEWED AND SIGNED BY
0	ISSUED FOR CONSTRUCTION	05/07	MMA	JAK	DTL

BHP Navajo Coal Co.

PROJECT: BNCC – AREA IV EXPANSION

DRAWING TITLE: COTTONWOOD ARROYO CROSSING PAVEMENT SECTIONS

DONALD T. LOPEZ NEW MEXICO 5122 REGISTERED PROFESSIONAL ENGINEER

URS CORPORATION
6501 AMERICAS PARKWAY, NE
SUITE 900
ALBUQUERQUE, NEW MEXICO 87110

Sheet 4 Of 20 Sheets

SCALE: AS NOTED

C-4

FILE: C-4 Misc Pavement Sections.dwg PROJECT NUMBER: 24342727

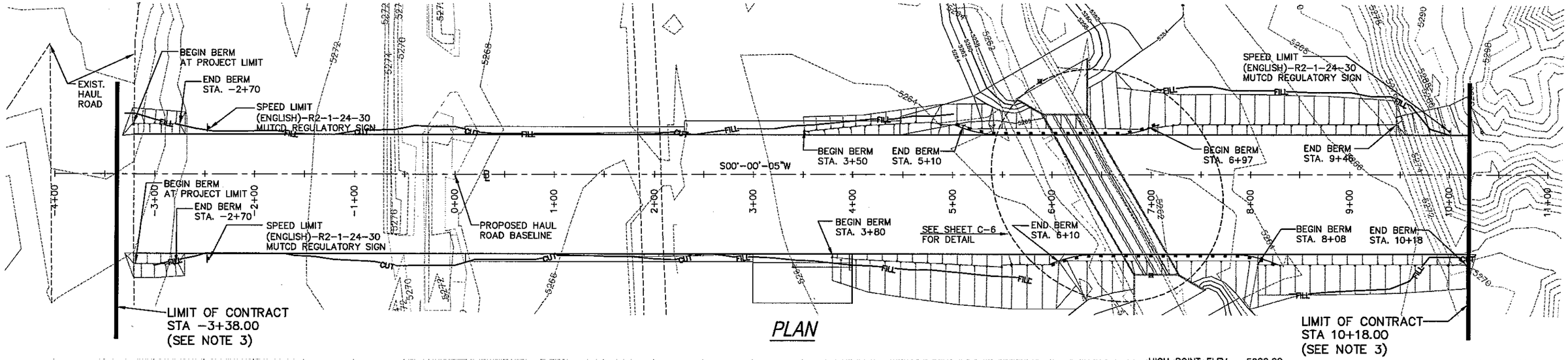

PLAN

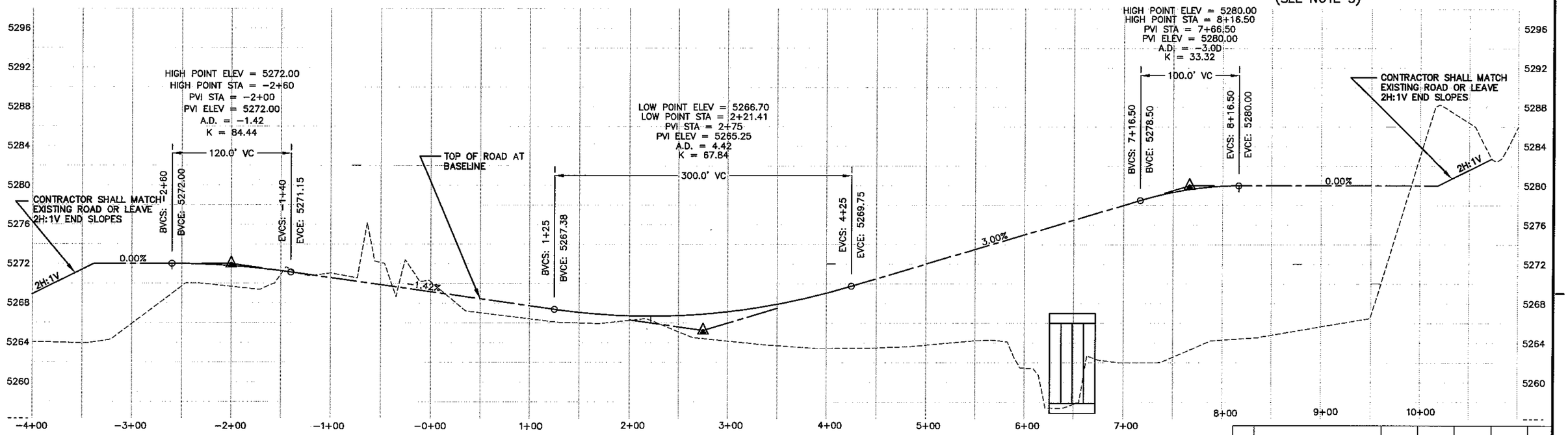

PROFILE ALONG HAUL ROAD ℄

NOTES:

1. SEE SHT C−2 FOR NOTES.
2. LOW POINT ON HAUL ROAD PROFILE SHALL BE MAINTAINED TO ENSURE HAUL ROAD DOES NOT OVERTOP DURING THE 10 YEAR STORM EVENT.
3. CONTRACTOR SHALL COORDINATE WITH BNCC REGARDING TIE−IN WITH APPROACH ROAD. TIE−IN ELEVATIONS PROVIDED BY BNCC.
4. MAXIMUM TRAFFIC (ANY VEHICLE) SPEED IS 30 MPH.
5. CONTRACTOR SHALL FIELD VERIFY GUARD RAIL POSTS DO NOT CONTACT TOP OF BOX CULVERT.

SCALE
50' 0 50' 100'
CONTOUR INTERVAL 2' FT.

SCALE
0 2.5' 5'
FEET (VERTICAL)

KENT W. WHITMAN
NEW MEXICO
6170
REGISTERED PROFESSIONAL ENGINEER

REV. No.	REVISIONS	DATE	DESIGN BY	DRAWN BY	REVIEWED AND SIGNED BY
0	ISSUED FOR CONSTRUCTION	05/07	EAI	JAK	KMW

BHP Navajo Coal Co.

PROJECT: BNCC — AREA IV EXPANSION

DRAWING TITLE: COTTONWOOD ARROYO CROSSING HAUL ROAD PLAN AND PROFILE

URS

URS CORPORATION
6501 AMERICAS PARKWAY, NE
SUITE 900
ALBUQUERQUE, NEW MEXICO 87110

Sheet 5 Of 20 Sheets

SCALE: AS NOTED

C−5

FILE: C−5 Haul Road Plan Profile.dwg

PROJECT NUMBER: 24342727

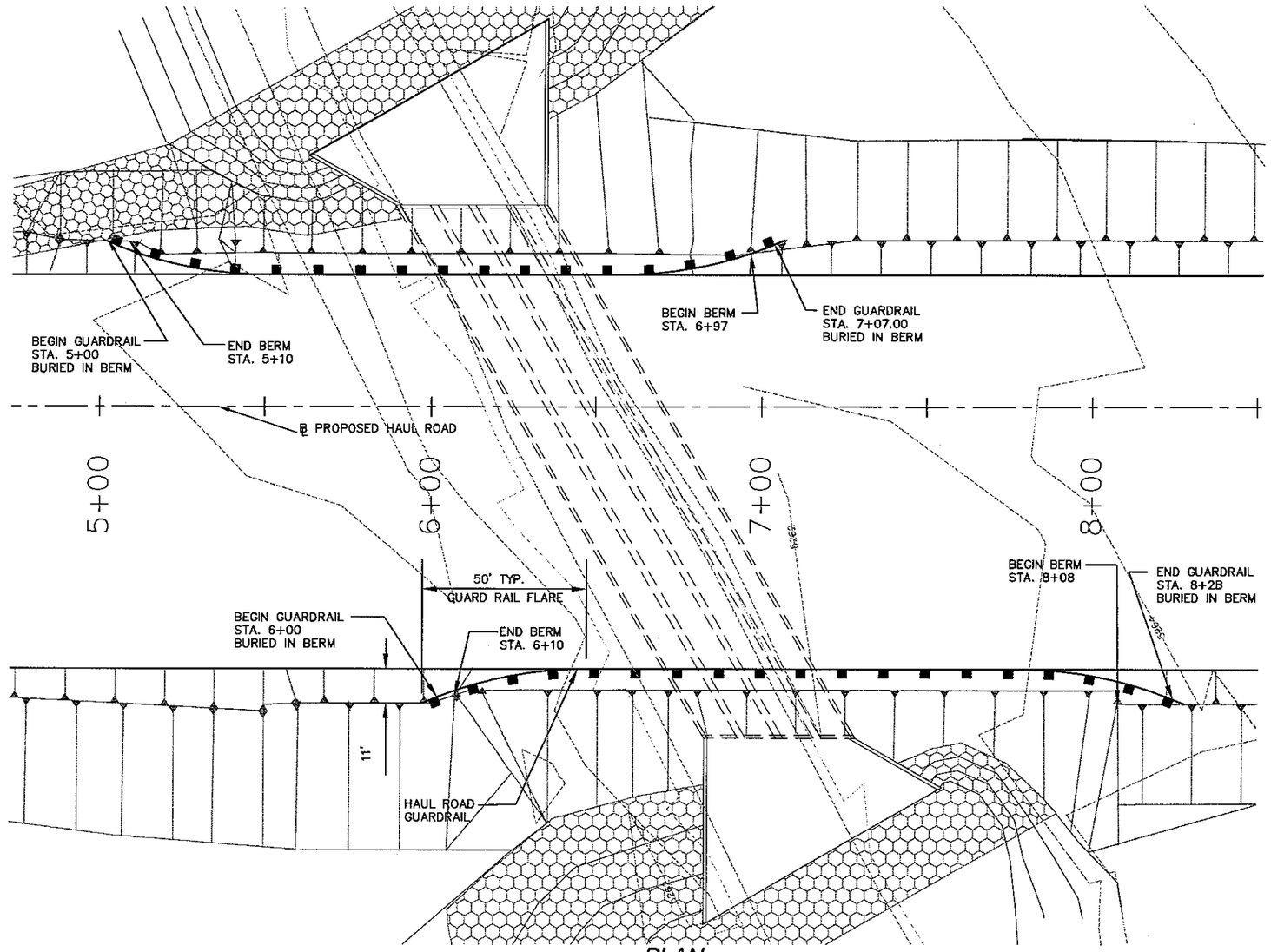

PLAN

SCALE

20' 0 20' 40'

CONTOUR INTERVAL 2' FT.

KENT W. WHITMAN
NEW MEXICO
6170
REGISTERED PROFESSIONAL ENGINEER

REV. No.	REVISIONS	DATE	DESIGN BY	DRAWN BY	REVIEWED AND SIGNED BY
0	ISSUED FOR CONSTRUCTION	05/07	EAI	JAK	KMW

BHP Navajo Coal Co.

PROJECT: BNCC – AREA IV EXPANSION

DRAWING TITLE:
COTTONWOOD ARROYO CROSSING
GUARDRAIL AT CULVERT DETAIL

URS

URS CORPORATION
6501 AMERICAS PARKWAY, NE
SUITE 900
ALBUQUERQUE, NEW MEXICO 87110

Sheet 6 Of 20 Sheets

SCALE: AS NOTED

C-6

FILE: C-6 Haul road culvert detail.dwg

PROJECT NUMBER: 24342727

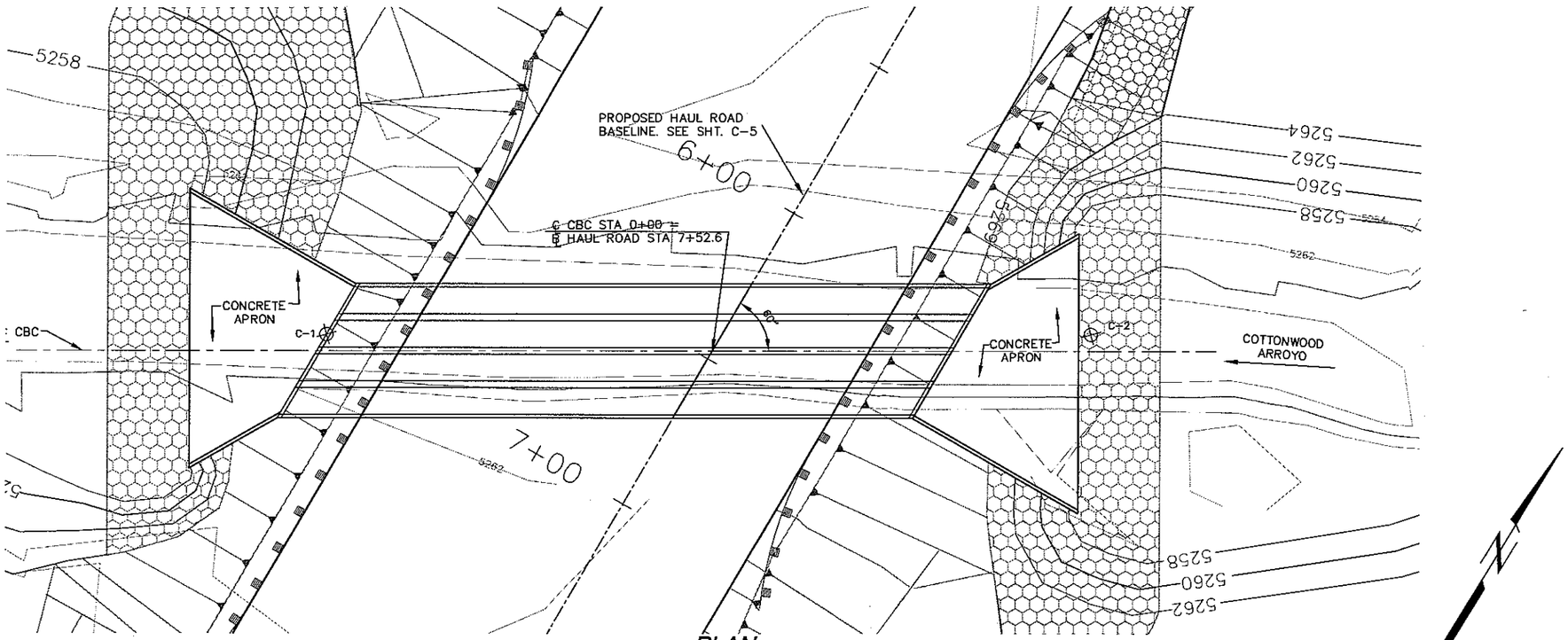

PLAN

SCALE

20' 0 20' 40'

CONTOUR INTERVAL 2' FT.

LEGEND

5250	EXISTING TOPOGRAPHY- IN FEET
	CONTROL POINT
	FLOW ARROW
	EMBANKMENT FILL SLOPE
	PROPOSED GUARDRAIL
	PROPOSED ROAD CENTERLINE

NOTES:

1. EXISTING GROUND TOPOGRAPHY AND CONTOURS WITHIN SITE PLAN LIMITS SHOWN ON THIS DRAWING ARE BASED ON 2004 GROUND SURVEY PROVIDED BY BNCC. TOPOGRAPHY OUTSIDE THESE LIMITS ARE UNKNOWN.
2. COORDINATES AND ELEVATIONS FROM THE 20D4 BNCC GROUND SURVEY ARE BASED ON BNCC MINE SURVEY CONTROL AND DATUM. THE CONTRACTOR SHALL CONFIRM ALL COORDINATES AND ELEVATIONS AND ENSURE TIE-IN OF THIS PROJECT WITH THE BNCC SURVEY CONTROL AND DATUM PRIOR TO CONSTRUCTION.
3. THE HYDROLOGIC DATA HAS BEEN FURNISHED BY BNCC, AND/OR THIRD PARTIES, WHICH WAS USED IN DESIGN PREPARATION. URS HAS RELIED ON THIS INFORMATION AS FURNISHED, AND IS NEITHER RESPONSIBLE FOR NOR HAS CONFIRMED THE ACCURACY OF THIS INFORMATION.
4. FOR PROPOSED GRADING AT THE CULVERT INLET AND OUTLET, SEE COTTONWOOD ARROYO CULVERT GRADING PLAN, SHEET D-2.
5. FOR PROPOSED EROSION PROTECTION, SEE EROSION CONTROL DETAILS SHEET D-4.
6. FOR DETAILED DIMENSIONING OF THE CONCRETE APRON, AND WINGWALLS, SEE STRUCTURAL DETAILS ON SHEETS S-1 – S-4.

ABBREVIATIONS

CBC	CONCRETE BOX CULVERT
FL	FLOWLINE ELEVATION
BL	BASELINE
STA	STATION
L	LENGTH
s	SLOPE

HYDROLOGIC & HYDRAULIC DATA
DRAINAGE AREA = 76.99 SQ. MI.
DESIGN FREQUENCY = 10 YEAR, 6 HOUR
DESIGN DISCHARGE = 2186 CFS
DESIGN SURFACE WATER (DSW) ELEV. = 5265.43
DESIGN TAILWATER ELEVATION = 5262.14
OUTLET VELOCITY = 13.01 FT/SEC
ROADWAY OVERTOPPING
HIGH WATER FREQUENCY = 50 YEAR, 6 HOUR
HIGH WATER DISCHARGE = 4040 CFS
HIGH WATER ELEVATION = 5268.37
ROADWAY FLOODING DEPTH @ BL = 1.67 FT

CONTROL POINT LISTING				
POINT NO.	HAUL ROAD		EASTING	NORTHING
	STA.	OFFSET		
C-1	7+00.00	101.09' RT	299,659.04	2,008,136.88
C-2	5+87.13	94.40' LT	299,854.53	2,008,249.75

NOTES: 1. OWNERS SURVEYDRS WILL RE-ESTABLISH CONTROL POINTS

2. COORDINATES LISTED ARE A LOCAL SYSTEM BASED ON THIS MONUMENTATION

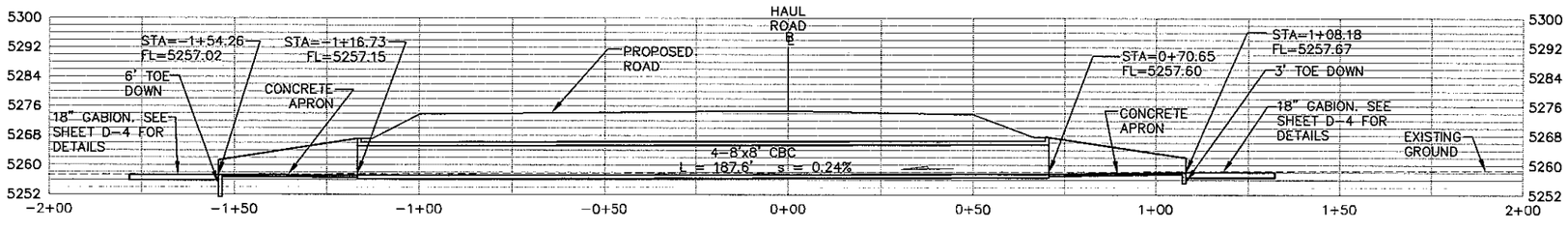

℄ PROFILE

SCALE

20' 0 20' 40'

FEET

REV. No.	REVISIONS	DATE	DESIGN BY	DRAWN BY	REVIEWED AND SIGNED BY
0	ISSUED FOR CONSTRUCTION	05/07	RLR	JAK	KMW

BHP Navajo Coal Co.

PROJECT: BNCC – AREA IV EXPANSION

DRAWING TITLE: COTTONWOOD ARROYO CULVERT PLAN AND PROFILE

URS CORPORATION
6501 AMERICAS PARKWAY, NE
SUITE 900
ALBUQUERQUE, NEW MEXICO 87110

Sheet 13 of 20 Sheets

SCALE: AS NOTED

D-1

KENT N. WHITMAN NEW MEXICO 6170 REGISTERED PROFESSIONAL ENGINEER

FILE: D-1 Plan and Prof.dwg PROJECT NUMBER: 24342727

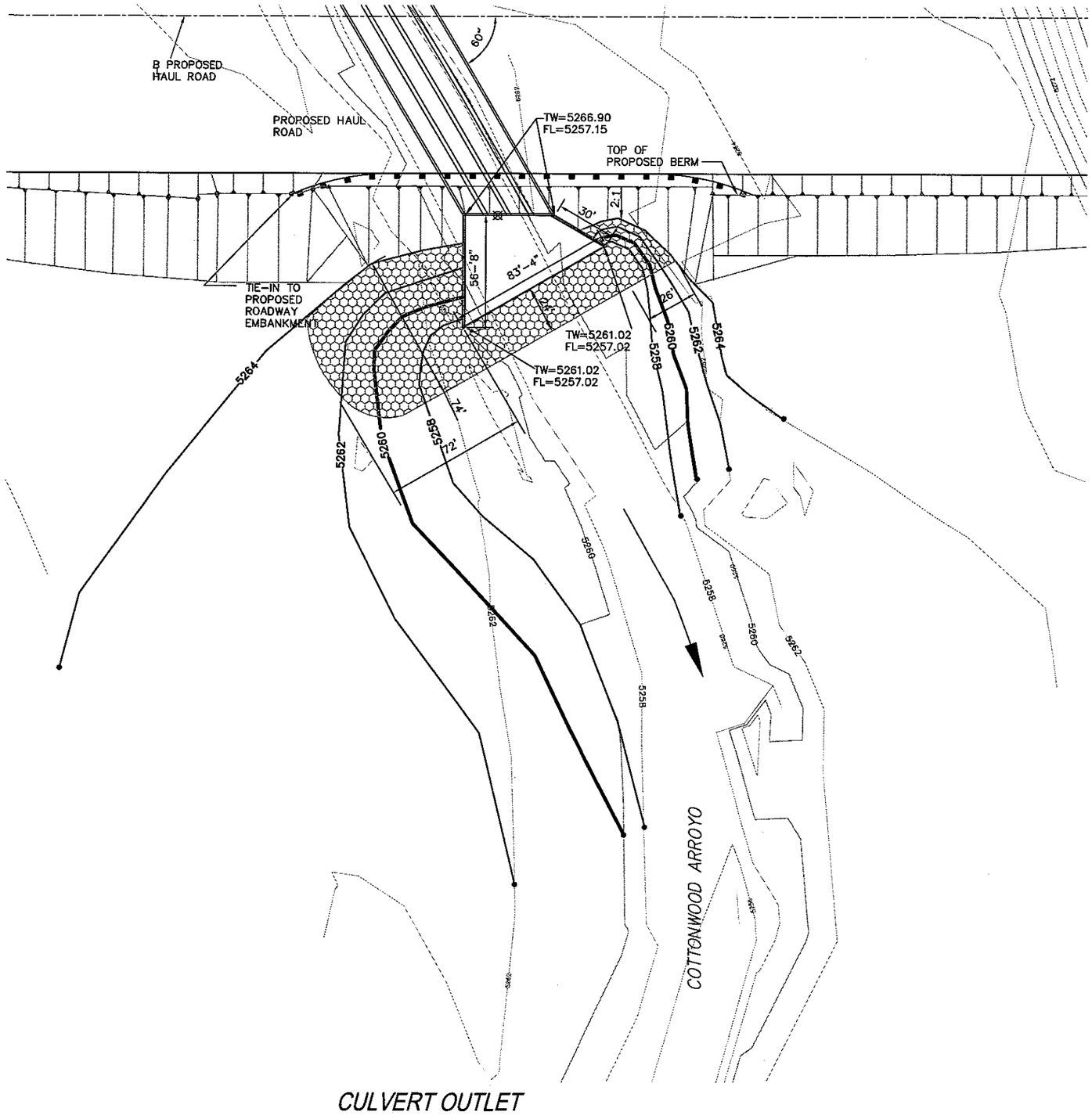

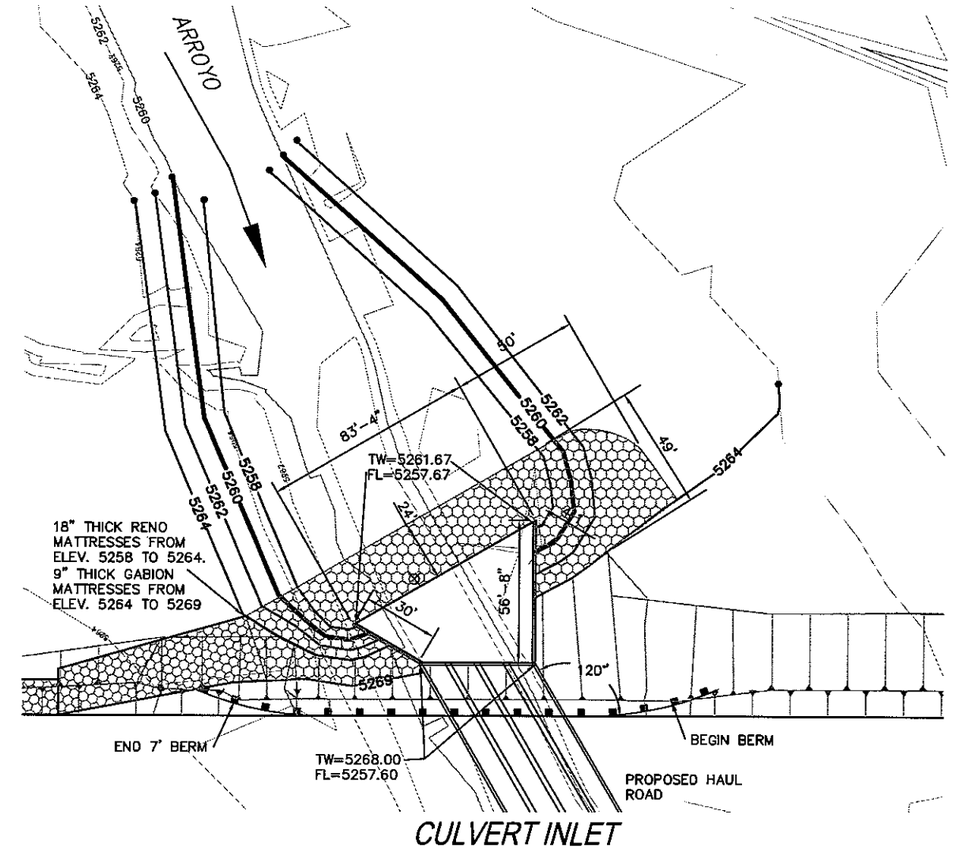

ABBREVIATIONS

TW TOP OF WALL
FL FLOWLINE ELEVATION

LEGEND

5250 EXISTING TOPOGRAPHY - IN FEET
5250 PROPOSED CONTOUR - IN FEET
GABION ARMORING

BOX CULVERT GRADING PLAN

NOTES:

1. EXISTING GROUND TOPOGRAPHY AND CONTOURS WITHIN SITE PLAN LIMITS SHOWN ON THIS DRAWING ARE BASED ON 2004 GROUND SURVEY PROVIDED BY BNCC. TOPOGRAPHY OUTSIDE THESE LIMITS ARE UNKNOWN.
2. COORDINATES AND ELEVATIONS FROM THE 2004 BNCC GROUND SURVEY ARE BASED ON BNCC MINE SURVEY CONTROL AND DATUM. THE CONTRACTOR SHALL CONFIRM ALL COORDINATES AND ELEVATIONS AND ENSURE TIE-IN OF THIS PROJECT WITH THE BNCC SURVEY CONTROL AND DATUM PRIOR TO CONSTRUCTION.

SCALE
30' 0 30' 60'
CONTOUR INTERVAL 2' FT.

KENT W. WHITMAN NEW MEXICO 6170 REGISTERED PROFESSIONAL ENGINEER

REV. No.	REVISIONS	DATE	DESIGN BY	DRAWN BY	REVIEWED AND SIGNED BY
0	ISSUED FOR CONSTRUCTION	05/07	RLR	JAK	KMW

BHP Navajo Coal Co.

PROJECT: BNCC – AREA IV EXPANSION

DRAWING TITLE: COTTONWOOD ARROYO CULVERT GRADING PLAN

URS CORPORATION
6501 AMERICAS PARKWAY, NE
SUITE 900
ALBUQUERQUE, NEW MEXICO 87110

Sheet 14 of 20 Sheets
SCALE: AS NOTED
D-2

FILE: D-2 GRADING.dwg PROJECT NUMBER: 24342727

NOTES:

1. EXISTING GROUND TOPOGRAPHY AND CONTOURS WITHIN SITE PLAN LIMITS SHOWN ON THIS DRAWING ARE BASED ON 2004 GROUND SURVEY PROVIDED BY BNCC. TOPOGRAPHY OUTSIDE THESE LIMITS ARE UNKNOWN.
2. COORDINATES AND ELEVATIONS FROM THE 2004 BNCC GROUND SURVEY ARE BASED ON BNCC MINE SURVEY CONTROL AND DATUM. THE CONTRACTOR SHALL CONFIRM ALL COORDINATES AND ELEVATIONS AND ENSURE TIE-IN OF THIS PROJECT WITH THE BNCC SURVEY CONTROL AND DATUM PRIOR TO CONSTRUCTION.
3. ALL STATION AND OFFSET DATA BASED ON THE PROPOSED HAUL ROAD ALIGNMENT.
4. SEE SHEET D-4 FOR CROSS SECTIONS.
5. GALVANIZED WIRE SHALL BE USED FOR GABIONS.

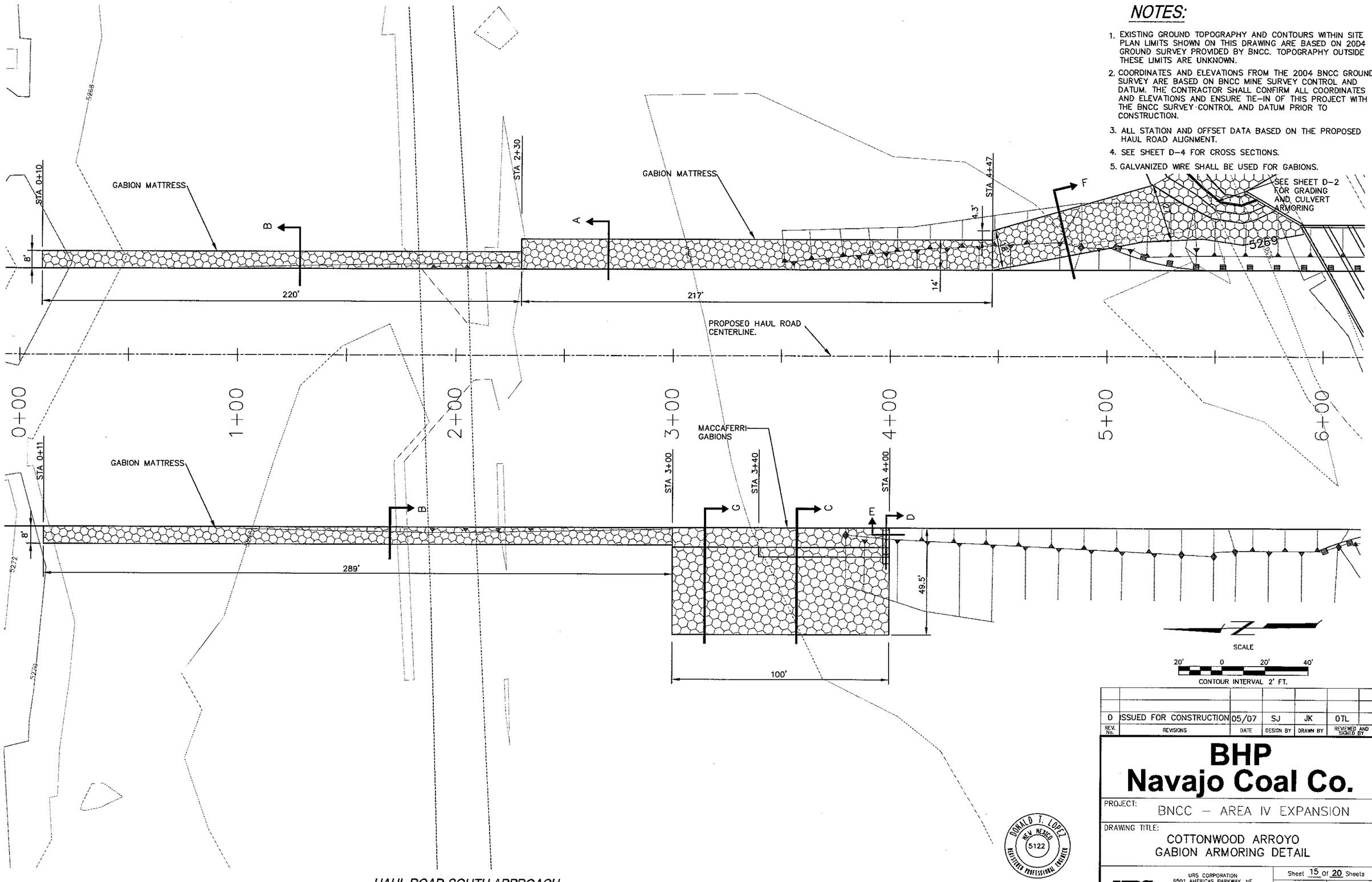

HAUL ROAD SOUTH APPROACH

REV. No.	REVISIONS	DATE	DESIGN BY	DRAWN BY	REVIEWED AND SIGNED BY
0	ISSUED FOR CONSTRUCTION	05/07	SJ	JK	OTL

BHP Navajo Coal Co.

PROJECT: BNCC – AREA IV EXPANSION

DRAWING TITLE: COTTONWOOD ARROYO GABION ARMORING DETAIL

DONALD T. LOPEZ NEW MEXICO 5122 REGISTERED PROFESSIONAL ENGINEER

URS CORPORATION
6501 AMERICAS PARKWAY, NE
SUITE 900
ALBUQUERQUE, NEW MEXICO 87110

Sheet 15 of 20 Sheets

SCALE: AS NOTED

D-3

FILE: D-3 GABION detail sheet.dwg PROJECT NUMBER: 24342727

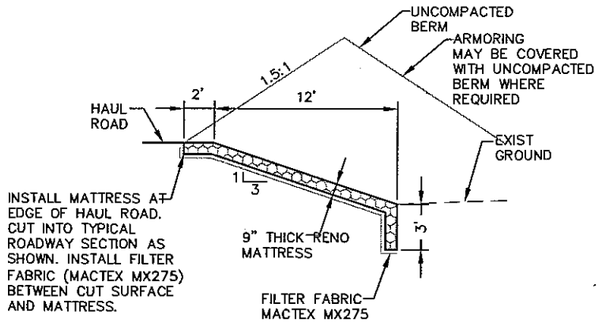

ARMORING SECTION A
STA 2+30 TO 4+47

SCALE:
HZ 1" = 5'
VT 1" = 5'

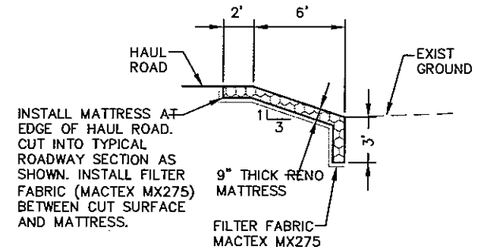

ARMORING SECTION B
STA. 0+10 TO 2+30 EAST
STA 0+11 TO 3+00 WEST

SCALE:
HZ 1" = 5'
VT 1" = 5'

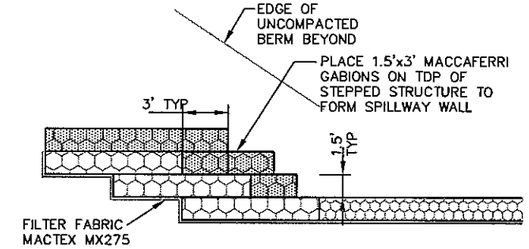

GABIONS SECTION D

SCALE:
HZ 1" = 5'
VT 1" = 5'

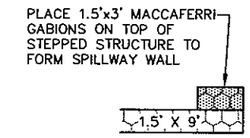

GABIONS SECTION E

SCALE:
HZ 1" = 5'
VT 1" = 5'

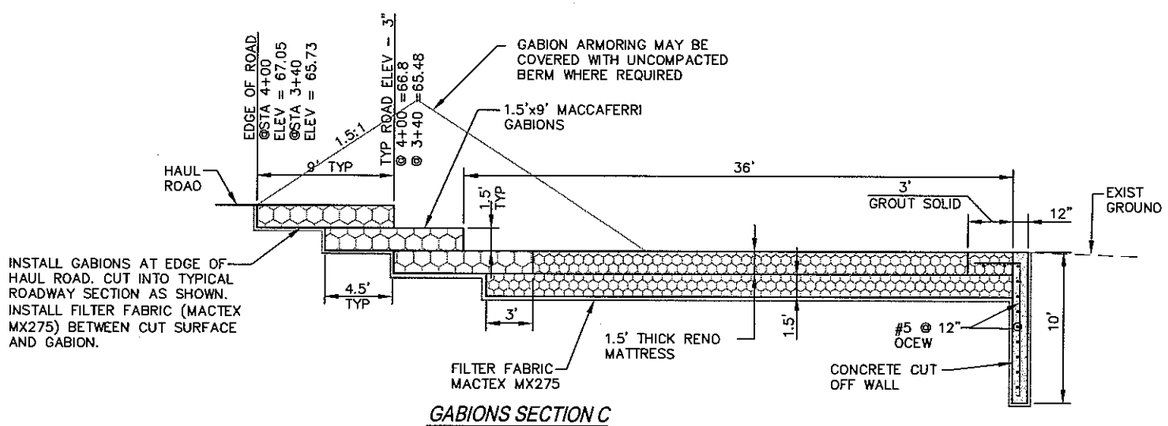

GABIONS SECTION C
STA 3+40 TO 4+00

SCALE:
HZ 1" = 5'
VT 1" = 5'

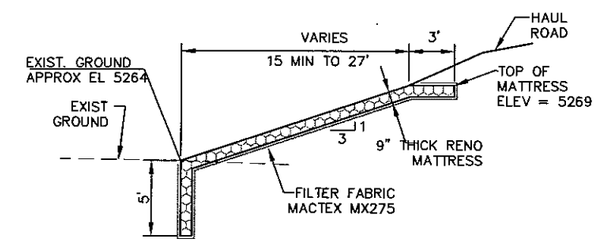

GABIONS SECTION F
STA 4+47 TO 5+62

SCALE:
HZ 1" = 5'
VT 1" = 5'

NOTES:

1. GALVANIZED WIRE SHALL BE USED FOR GABIONS.

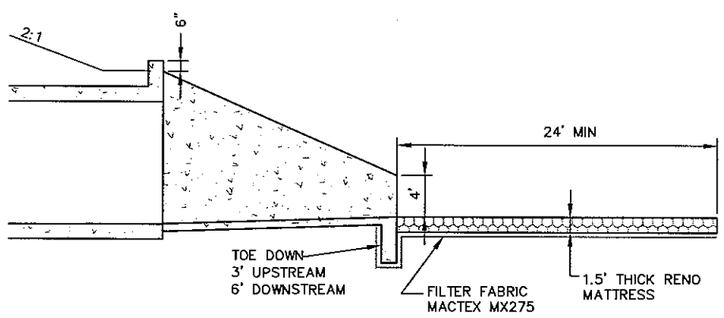

BOX CULVERTS WITH APRONS SECTION

NTS

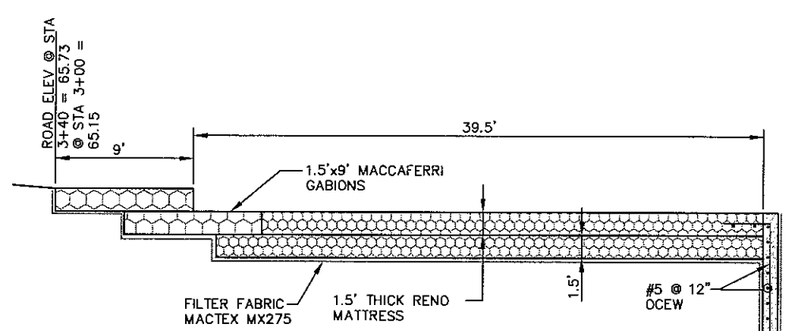

ARMORING SECTION G
STA 3+00 TO 3+40

SCALE:
HZ 1" = 5'
VT 1" = 5'

DONALD T. LOPEZ
NEW MEXICO
5122
REGISTERED PROFESSIONAL ENGINEER

REV. No.	REVISIONS	DATE	DESIGN BY	DRAWN BY	REVIEWED AND SIGNED BY
0	ISSUED FOR CONSTRUCTION	05/07	SJ	JK	DTL

BHP Navajo Coal Co.

PROJECT: BNCC – AREA IV EXPANSION

DRAWING TITLE: COTTONWOOD ARROYO GABION AND EROSION CONTROL DETAILS

URS CORPORATION
6501 AMERICAS PARKWAY, NE
SUITE 900
ALBUQUERQUE, NEW MEXICO 87110

Sheet 16 of 20 Sheets
SCALE: AS NOTED
D-4

FILE: D-4 EROSION AND GABION DETAILS.DWG
PROJECT NUMBER: 24342727

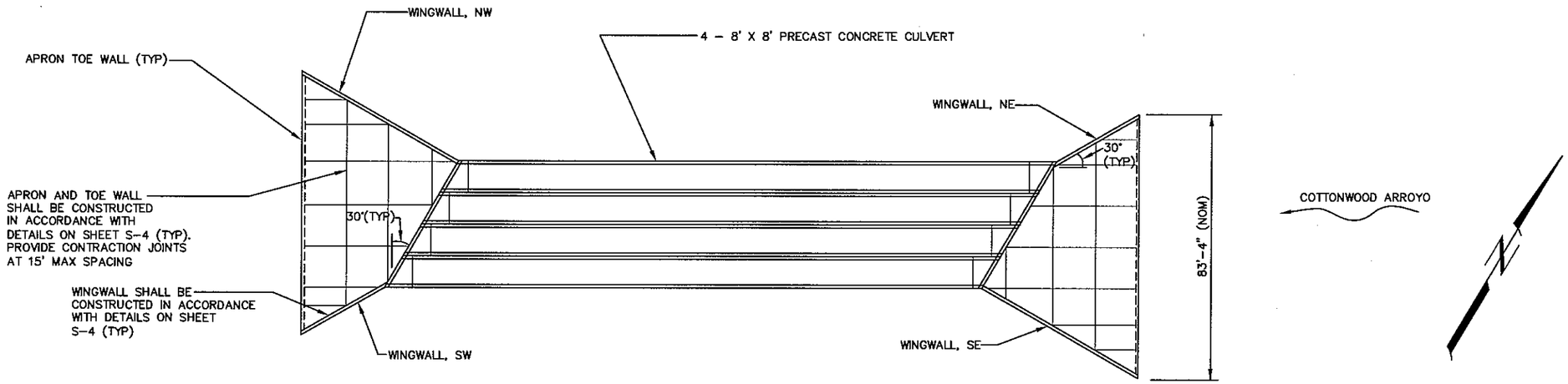

CULVERT STRUCTURAL PLAN

SCALE
20' 0 20' 40'

NOTES:

GENERAL

1. SEE SHT C–2 FOR GENERAL NOTES.
2. SEE SHT D–1 FOR HYDROLOGIC AND HYDRAULIC DATA AND SHT D–2 FOR ELEVATIONS.

DESIGN SPECIFICATIONS

1. DESIGN: AASHTO STANDARD SPECIFICATIONS FOR HIGHWAY BRIDGES, 17TH EDITION, 2002.
2. CONSTRUCTION: NEW MEXICO DEPARTMENT OF TRANSPORTATION 2005 INTERIM SPECIFICATIONS FOR HIGHWAY AND BRIDGE CONSTRUCTION.

GEOTECHNICAL DATA

1. FOR BORELOG AND TEST PIT GEOTECHNICAL INFORMATION REFER TO THE DESIGN REPORT.

REINFORCED CONCRETE

1. PROVIDE 3/4" CHAMFERS ON ALL EXPOSED EDGES, UNLESS NOTED OTHERWISE.
2. PROVIDE 2" MINIMUM COVER TO REINFORCING STEEL, UNLESS NOTED OTHERWISE.
3. CONSTRUCTION JOINTS SHALL BE MADE ONLY AT THE LOCATIONS SHOWN IN THE PLANS, UNLESS OTHERWISE APPROVED BY THE ENGINEER.
4. ALL CAST–IN–PLACE CONCRETE SHALL HAVE A MINIMUM 28 DAY COMPRESSIVE STRENGTH OF 4000 PSI ($f'c$ = 4000 PSI).
5. ALL PRECAST CONCRETE SHALL HAVE A MINIMUM 28 DAY COMPRESSIVE STRENGTH OF 5000 PSI ($f'c$ = 5000 PSI).

REINFORCING STEEL

1. ALL REINFORCING STEEL SHALL CONFORM TO AASHTO M31 / ASTM A615 GRADE 60. DIMENSIONS TO REINFORCING STEEL LOCATIONS ARE TO CENTERLINE OF BARS UNLESS NOTED OTHERWISE.
2. WELDED WIRE FABRIC SHALL CONFORM TO ASTM A185, FLAT SHEETS, UNLESS NOTED OTHERWISE.
3. REINFORCING STEEL LAP SPLICES NOT SHOWN IN THE PLANS SHALL BE APPROVED BY THE ENGINEER.
4. MECHANICAL BAR SPLICES MAY BE USED AS SHOWN IN THE PLANS OR AS APPROVED BY THE ENGINEER IN LIEU OF LAP SPLICES. THE CONTRACTOR SHALL SUBMIT CERTIFIED TEST RESULTS FOR EACH BAR SIZE AND EACH MECHANICAL SPLICE TYPE, VERIFYING THAT THE MECHANICAL BAR SPLICE IS CAPABLE OF DEVELOPING AT LEAST 125% OF THE YIELD STRENGTH OF THE BARS BEING SPLICED.

FOR 28 DAY CONCRETE STRENGTH OF 4000 PSI AND GRADE 60 REINFORCING STEEL

BAR SIZE	#4	#5	#6	#7	#8	#9	#10
SPLICE LENGTH (FEET)	1'–9"	2'–3"	2'–7"	3'–3"	4'–3"	5'–5"	6'–10"

NOTE:
(A) FOR HORIZONTAL REINFORCING BARS WITH MORE THAN 12 INCHES OF CONCRETE CAST BELOW THE REINFORCEMENT, THE ABOVE VALUES SHALL BE MULTIPLIED BY 1.4

CULVERT DESIGN

1. DESIGN SHALL CONFORM TO CURRENT AASHTO STANDARD AND ASTM C1433.
2. DEAD LOADS
   NORMAL CONCRETE WEIGHT = 150 PCF
   SOIL WEIGHT = 120 PCF
3. SOIL LOADS
   LATERAL PRESSURE = 60 PCF (MAX) OR 30 PCF (MIN)
   ALLOWABLE BEARING PRESSURE = 5000 PSF
4. VEHICLE LOADS
   DRAGLINE:
   SURFACE LOAD = 5D98 PSF ON TWO 16' X 80' SHOES
   HAUL TRUCK:
   SURFACE LOAD = 14,700 PSF ON 12.54 SQ FT WHEEL CONTACT
5. THE CONTRACTOR SHALL SUBMIT DESIGN CALCULATIONS AND SHOP DRAWINGS FOR THE DESIGN OF THE BOX CULVERTS FOR APPROVAL. CALCULATIONS SHALL BE STAMPED AND SIGNED BY AN ENGINEER LICENSED IN THE STATE OF NEW MEXICO.
6. IN LIEU OF THE DESIGN SHOWN, THE CONTRACTOR MAY FURNISH AN ALTERNATIVE DESIGN THAT MEETS ALL THE DESIGN, LOAD AND HYDRAULIC CRITERIA. THE CONTRACTOR SHALL SUBMIT DESIGN CALCULATIONS AND SHOP DRAWINGS FOR THE ALTERNATIVE DESIGN FOR APPROVAL. CALCULATIONS SHALL BE STAMPED AND SIGNED BY AN ENGINEER LICENSED IN THE STATE OF NEW MEXICO.

CULVERT CONSTRUCTION

1. EXCAVATION AND BACKFILL SHALL BE IN ACCORDANCE WITH THE DETAILS SHOWN ON SHEET S–3.
2. WINGWALLS AND APRONS SHALL BE CONSTRUCTED IN ACCORDANCE WITH THE DETAILS SHOWN ON SHEET S–4.
3. LIFTING DEVICES SHALL BE THE SOLE RESPONSIBILITY OF THE MANUFACTURER. THEY SHALL BE LOCATED 1" BELOW THE TOP OF THE CONCRETE SURFACE AND SHALL BE FILLED WITH GROUT BEFORE BACKFILLING IS STARTED.

WINGWALL DESIGNATION	H	K	ℓ	M
NE	8'–0"	6"	30'–0"	9'–9"
SE	8'–0"	6"	56'–8"	9'–9"
NW	8'–0"	6"	56'–8"	9'–9"
SW	8'–0"	6"	30'–0"	9'–9"

WINGWALL TABLE

REFER TO SHEET S–4 FOR LOCATION OF WINGWALL TABLE VARIABLES H, K, ℓ, AND M.

BARRY T. CHUNG
NEW MEXICO
15471
LICENSED PROFESSIONAL ENGINEER

REV. No.	REVISIONS	DATE	DESIGN BY	DRAWN BY	REVIEWED AND SIGNED BY
0	ISSUED FOR CONSTRUCTION	5/07	BTC	JAK	BTC

BHP Navajo Coal Co.

PROJECT: BNCC – AREA IV EXPANSION

DRAWING TITLE: COTTONWOOD ARROYO CROSSING BOX CULVERT STRUCTURAL PLAN

URS CORPORATION
6501 AMERICAS PARKWAY, NE
SUITE 900
ALBUQUERQUE, NEW MEXICO 87110

Sheet 17 of 20 Sheets
SCALE: AS NOTED
S–1

FILE: S–1 Plan.dwg PROJECT NUMBER: 24342727

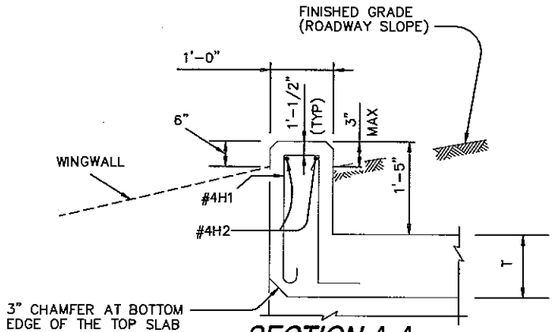

SECTION A-A

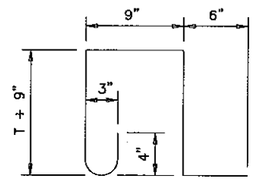

#4H1

(SPA = 1'-0" MAX)

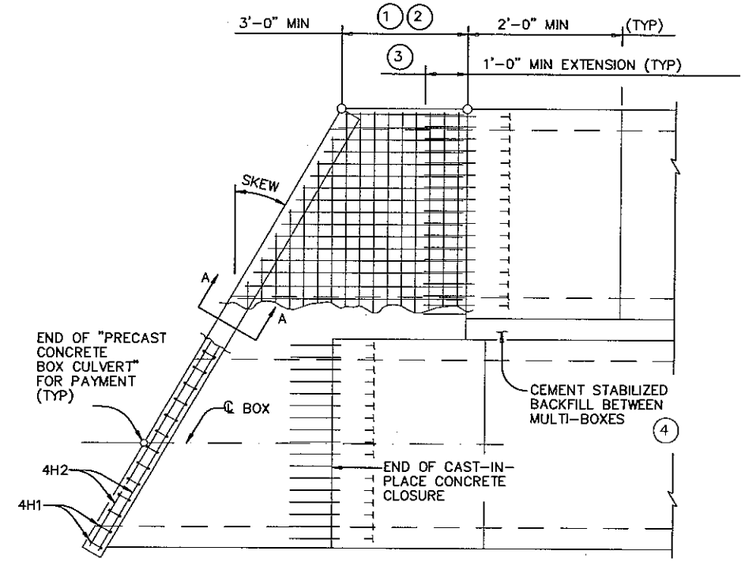

PLAN OF SKEWED ENDS

(SHOWING MULTI-BOX PLACEMENT)

KEYED NOTES:

1. CAST-IN-PLACE CONCRETE CLOSURE SHALL BE 3'-0" MIN. BOXES SHALL BE CAST SHORT OR BROKEN BACK IN THE FIELD. ALL REINFORCING IN THE CLOSURE SHALL BE THE SAME SIZE AND SPACING AS IN THE PRECAST BOX SECTION. EXCEPT WHERE SHOWN OTHERWISE, THE CAST-IN-PLACE CLOSURE SHALL BE FLUSH WITH THE INSIDE AND OUTSIDE FACES OF THE PRECAST BOX SECTION.
2. FOR MULTIPLE UNIT PLACEMENTS THE LENGTH OF THE CLOSURE FOR THE INTERIOR WALLS MAY BE ADJUSTED AS NECESSARY. THE LENGTH OF THE TOP SLAB, BOTTOM SLAB, AND EXTERIOR WALL CLOSURE SHALL NOT BE LESS THAN 3'-0".
3. PRECAST BOX REINFORCING SHALL EXTEND A MINIMUM OF 1'-0" INTO CONCRETE CLOSURE (TYP).
4. CEMENT STABILIZED BACKFILL AND GROUT BETWEEN BOXES SHALL BE CONSIDERED INCIDENTAL TO THE BOX CULVERT.
5. ALL CAST IN PLACE CONCRETE AND REINFORCING SHALL BE CONSIDERED INCIDENTAL TO THE BOX CULVERT.
6. HEADWALL AND WINGWALL. REINFORCING SHALL EXTEND INTO CONCRETE CLOSURE. ANY REINFORCEMENT THAT DOES NOT FIT INTO THE CLOSURE SHALL BE BENT OR TRIMMED AS NECESSARY.

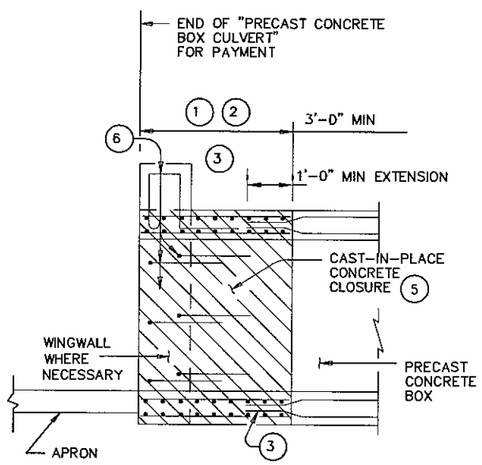

WALL CLOSURE

(AT ALL WALLS)

TYPICAL APRON CONSTRUCTION JOINT

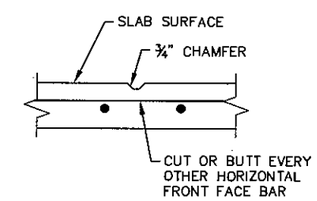

TYPICAL APRON CONTRACTION JOINT

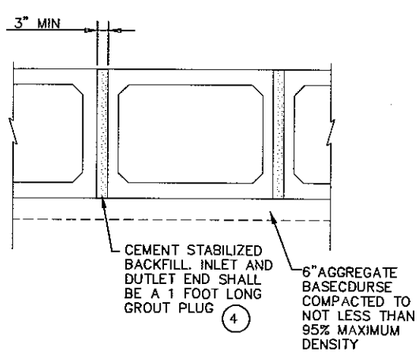

MULTIPLE UNIT PLACEMENT

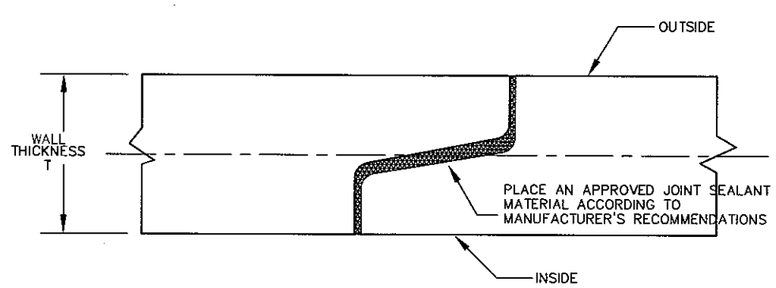

TYPICAL BOX CULVERT TRANSVERSE JOINT

REV. No.	REVISIONS	DATE	DESIGN BY	DRAWN BY	REVIEWED AND SIGNED BY
0	ISSUED FOR CONSTRUCTION	05/07	BTC	JAK	BTC

BHP Navajo Coal Co.

PROJECT: BNCC – AREA IV EXPANSION

DRAWING TITLE: COTTONWOOD ARROYO CROSSING BOX CULVERT DETAILS

BARRY T. CHUNG NEW MEXICO 15471 LICENSED PROFESSIONAL ENGINEER

URS CORPORATION
6501 AMERICAS PARKWAY, NE
SUITE 900
ALBUQUERQUE, NEW MEXICO 87110

Sheet 18 Of 20 Sheets

SCALE: NTS

S-2

FILE: S-2 Culvert misc Details.dwg PROJECT NUMBER: 24342727

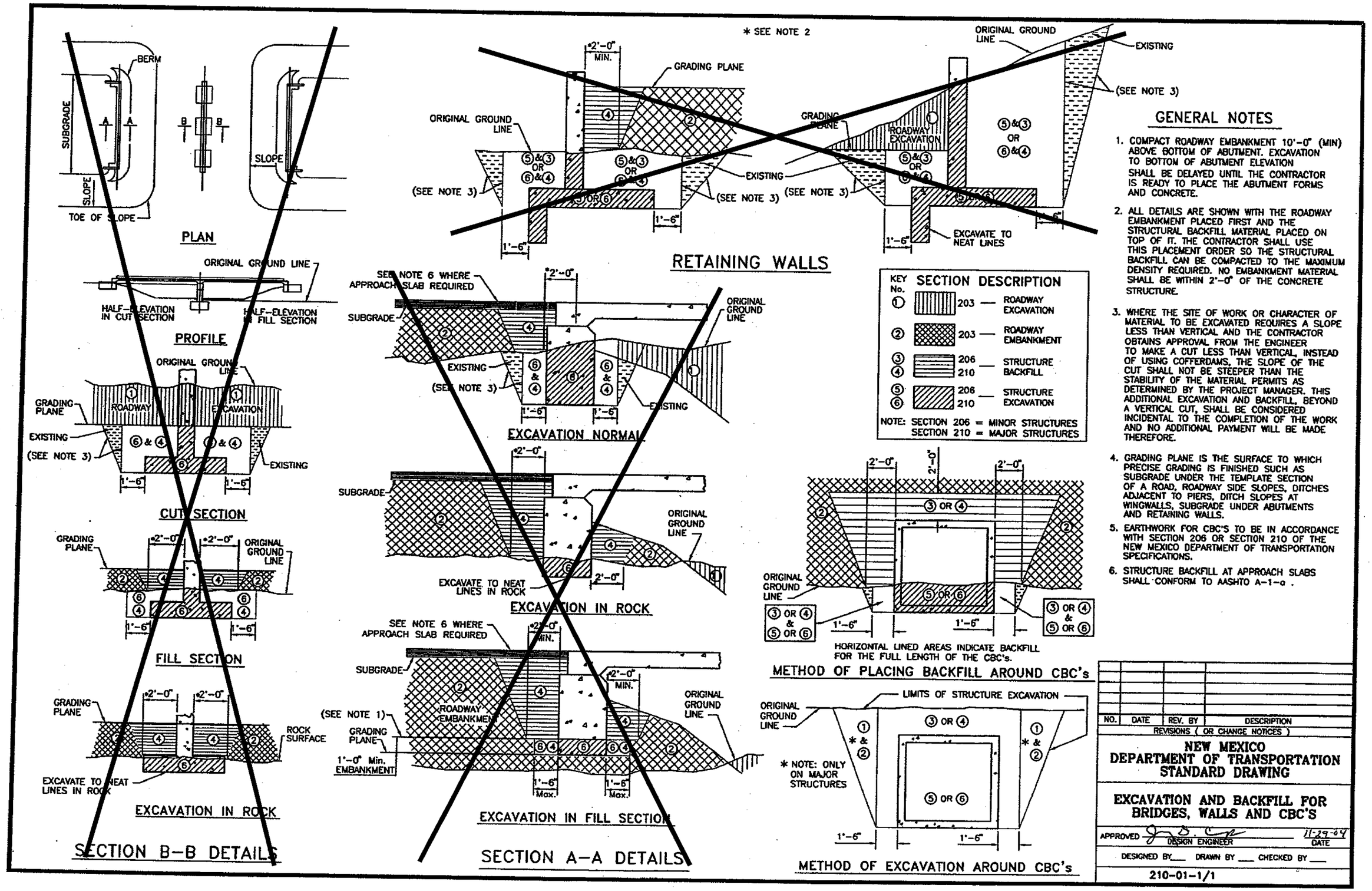

GENERAL NOTES

1. COMPACT ROADWAY EMBANKMENT 10'-0" (MIN) ABOVE BOTTOM OF ABUTMENT. EXCAVATION TO BOTTOM OF ABUTMENT ELEVATION SHALL BE DELAYED UNTIL THE CONTRACTOR IS READY TO PLACE THE ABUTMENT FORMS AND CONCRETE.
2. ALL DETAILS ARE SHOWN WITH THE ROADWAY EMBANKMENT PLACED FIRST AND THE STRUCTURAL BACKFILL MATERIAL PLACED ON TOP OF IT. THE CONTRACTOR SHALL USE THIS PLACEMENT ORDER SO THE STRUCTURAL BACKFILL CAN BE COMPACTED TO THE MAXIMUM DENSITY REQUIRED. NO EMBANKMENT MATERIAL SHALL BE WITHIN 2'-0" OF THE CONCRETE STRUCTURE.
3. WHERE THE SITE OF WORK OR CHARACTER OF MATERIAL TO BE EXCAVATED REQUIRES A SLOPE LESS THAN VERTICAL AND THE CONTRACTOR OBTAINS APPROVAL FROM THE ENGINEER TO MAKE A CUT LESS THAN VERTICAL, INSTEAD OF USING COFFERDAMS, THE SLOPE OF THE CUT SHALL NOT BE STEEPER THAN THE STABILITY OF THE MATERIAL PERMITS AS DETERMINED BY THE PROJECT MANAGER. THIS ADDITIONAL EXCAVATION AND BACKFILL, BEYOND A VERTICAL CUT, SHALL BE CONSIDERED INCIDENTAL TO THE COMPLETION OF THE WORK AND NO ADDITIONAL PAYMENT WILL BE MADE THEREFORE.
4. GRADING PLANE IS THE SURFACE TO WHICH PRECISE GRADING IS FINISHED SUCH AS SUBGRADE UNDER THE TEMPLATE SECTION OF A ROAD, ROADWAY SIDE SLOPES, DITCHES ADJACENT TO PIERS, DITCH SLOPES AT WINGWALLS, SUBGRADE UNDER ABUTMENTS AND RETAINING WALLS.
5. EARTHWORK FOR CBC'S TO BE IN ACCORDANCE WITH SECTION 206 OR SECTION 210 OF THE NEW MEXICO DEPARTMENT OF TRANSPORTATION SPECIFICATIONS.
6. STRUCTURE BACKFILL AT APPROACH SLABS SHALL CONFORM TO AASHTO A-1-a .

NO.	DATE	REV. BY	DESCRIPTION

REVISIONS (OR CHANGE NOTICES)

NEW MEXICO DEPARTMENT OF TRANSPORTATION STANDARD DRAWING

EXCAVATION AND BACKFILL FOR BRIDGES, WALLS AND CBC'S

APPROVED DESIGN ENGINEER 11-29-04 DATE

DESIGNED BY___ DRAWN BY ___ CHECKED BY ___

210-01-1/1

24342727

5-3 std details.dwg

S-3

GENERAL NOTES

1. ALL EXPOSED CONCRETE CORNERS SHALL BE CHAMFERED 3/4".
2. WINGWALL FOOTINGS AND FLOOR OF BOX CULVERT SHALL BE PLACED MONOLITHICALLY.
3. DIMENSIONS "H", "Ba", "RISE", "k", "l", "m" AND ANGLES FOR WINGWALLS SHALL BE AS SHOWN ON THE PLANS.
4. REINFORCING STEEL SHALL BE GRADE 60.
5. THE MINIMUM SPLICE LENGTH FOR COMMON BAR SIZES SHALL BE:

BAR	#4	#5	#6
SPLICE LENGTH	1'-3"	1'-7"	2'-0"

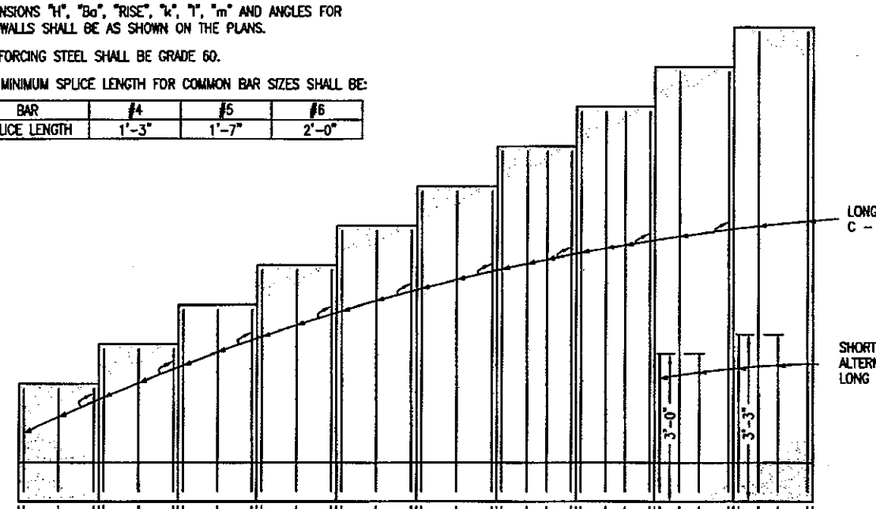

e =	1'-6"	1'-6"	1'-6"	1'-6"	1'-6"	1'-4"	1'-3"	11'	9"	7" CTRS.
h =	2'	3'	4'	5'	6'	7'	8'	9'	10'	11'
a =	1'-0"	1'-2"	1'-4"	1'-6"	1'-8"	1'-10"	2'-0"	2'-2"	2'-4"	2'-6"
b =	1'-8"	2'-0"	2'-4"	2'-8"	3'-0"	3'-4"	3'-8"	4'-0"	4'-4"	4'-8"
w =	2'-8"	3'-2"	3'-8"	4'-2"	4'-8"	5'-2"	5'-8"	6'-2"	6'-8"	7'-2"
c & d BARS	#4@1'-6"	#4@1'-6"	#4@1'-6"	#4@1'-6"	#4@1'-6"	#4@1'-4"	#5@1'-3"	#5@11"	#6@9"	#6@7" CTRS.
* CONC.CU.YD./L.F.	0.161	0.210	0.259	0.308	0.358	0.407	0.457	0.506	0.556	0.604
* REINF. LB./L.F.	8.0	9.3	10.7	12.1	14.3	16.4	23.0	28.6	41.8	54.6

* DOES NOT INCLUDE TOE WALL QUANTITIES

DESIGN TABLE

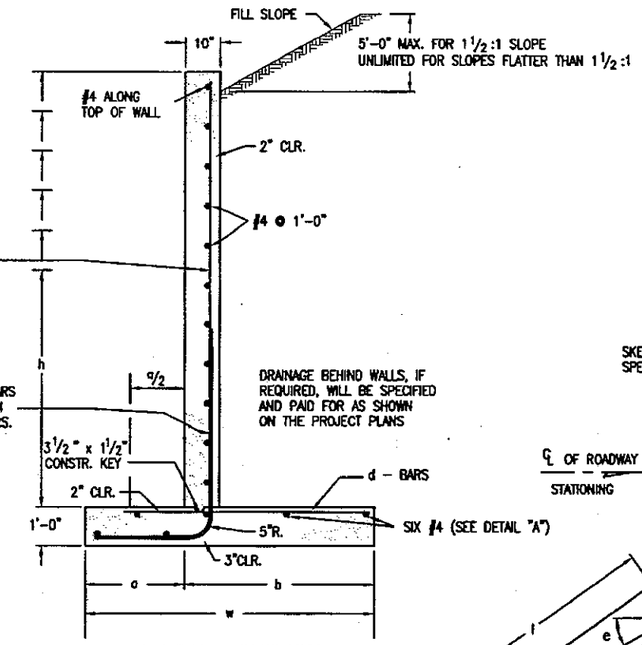

TYPICAL SECTION

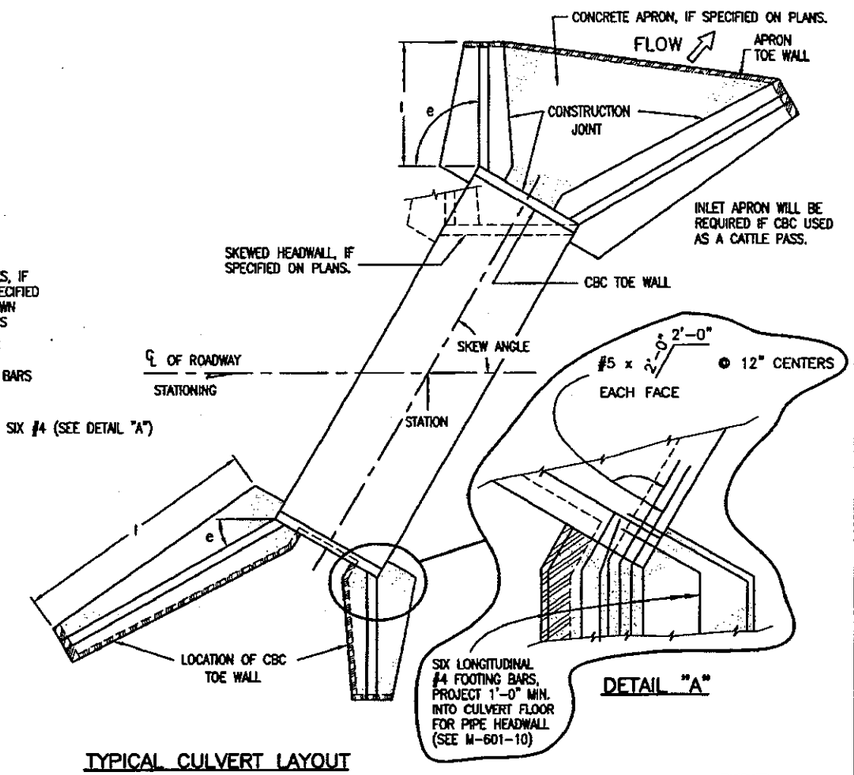

TYPICAL CULVERT LAYOUT

DETAIL "A"

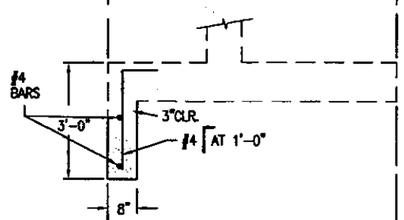

WITH TOE WALL

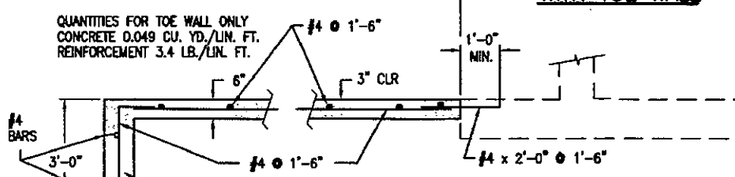

WITH CONCRETE APRON

REINFORCEMENT 0.89 LB./SQ. FT.

APRON TOE WALL

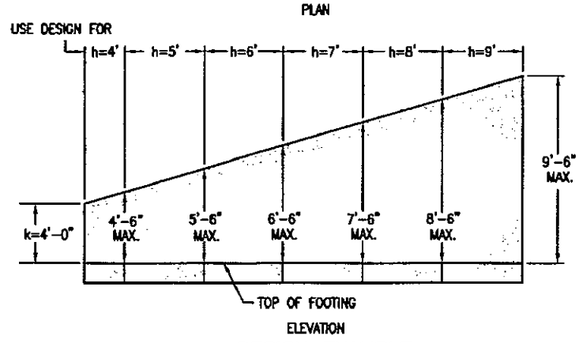

DESIGN EXAMPLE

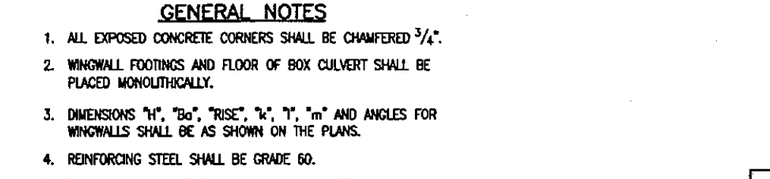

PLAN

DESIGN DATA:
UNIT STRESSES: f_s = 24,000 PSI
f_c = 1,200 PSI
n = 9

EQUIVALENT FLUID PRESSURE = 36 LBS./CU. FT.
MAXIMUM TOE PRESSURE = 1 TON/SQ. FT.

ALL CONSTRUCTION JOINTS SHALL BE THOROUGHLY CLEANED BEFORE CONCRETE IS POURED.

WINGWALL AND APRON CONCRETE SHALL BE:
CONCRETE CLASS B, OR D (BOX CULVERT) FOR CBC's.
CONCRETE CLASS B, OR D (WALL) FOR PIPES.

LIVE LOAD SURCHARGE HAS NOT BEEN CONSIDERED. WALLS WITHIN h/2 OF THE EDGE OF THE ROADWAY SHOULDER WILL REQUIRE A SPECIAL DESIGN IN ACCORDANCE WITH AASHTO STANDARD SPECIFICATIONS FOR HIGHWAY BRIDGES.

APRON REQUIRED AT INLET OF THE CBC, IF USED FOR CATTLE PASSAGE.

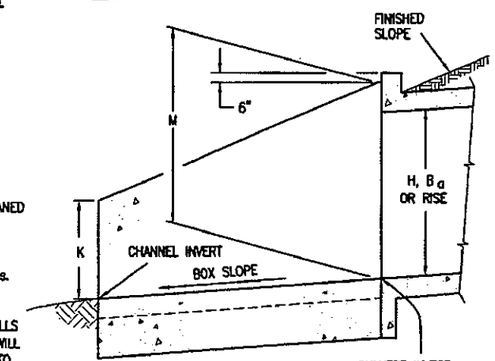

BOX ELEVATION

M = H, Ba OR RISE + (1'-4") UNLESS OTHERWISE SHOWN ON PLANS.

Colorado Department of Transportation
DOT
4201 East Arkansas Avenue
Denver, Colorado 80222
Phone: (303) 757-9083 FAX: (303) 757-9820
Project Development Branch SD

Computer File Information	
Path: www.dot.state.co.us/DevelopProjects/DesignSupport/MStandards/	
Drawing File Name: 6010200101.dwg	
Acad Version: R14	Scale: NA Units: English

Standard Plan Revised	
Date:	Comments:

WINGWALLS FOR PIPE OR BOX CULVERTS

Issued By: Project Development Branch October 1, 2000

STANDARD PLAN NO.
M-601-20
Sheet No. 1 of 1

24342639
S-4 std details.dwg