REG	STATE	PROJECT	SHEET NO.
SE	LA	RRP-LOP 10(2)	

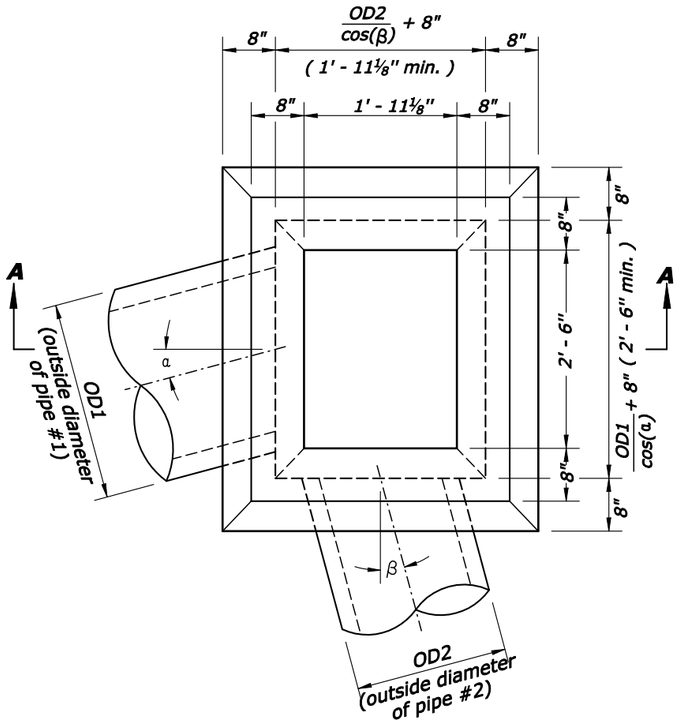

INLET, TYPE 6A

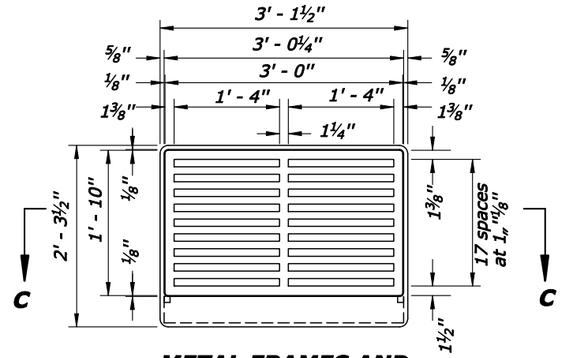

METAL FRAMES AND GRATINGS TYPE 6A

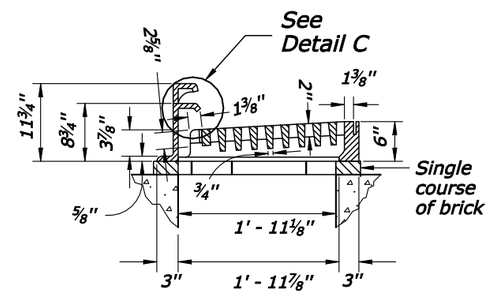

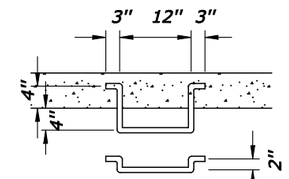

LADDER RUNG

¾" ⌀ or ¾" □ Steel or Wrought Iron to be used where depth exceeds 4'-0"

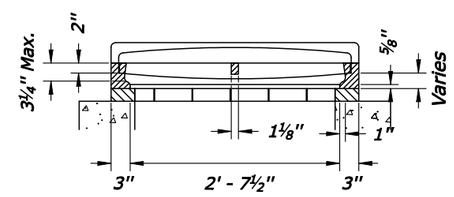

SECTION C-C

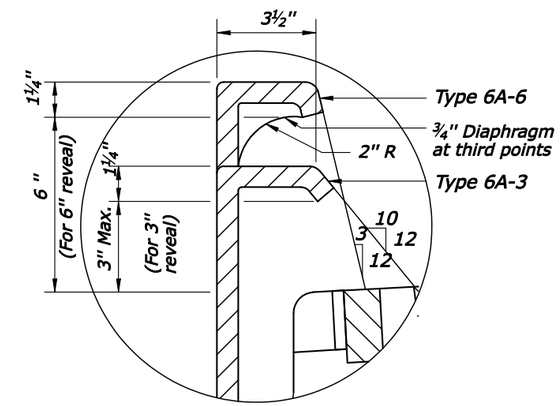

DETAIL C

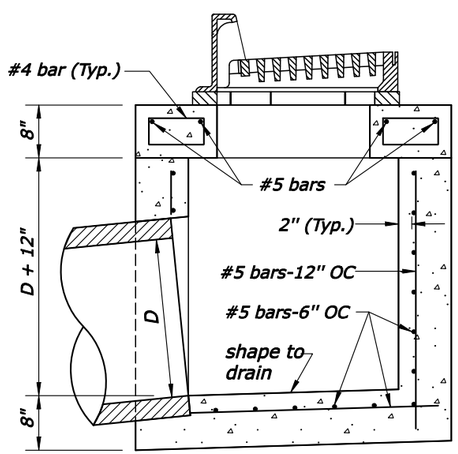

Limited Headroom

SECTION A-A

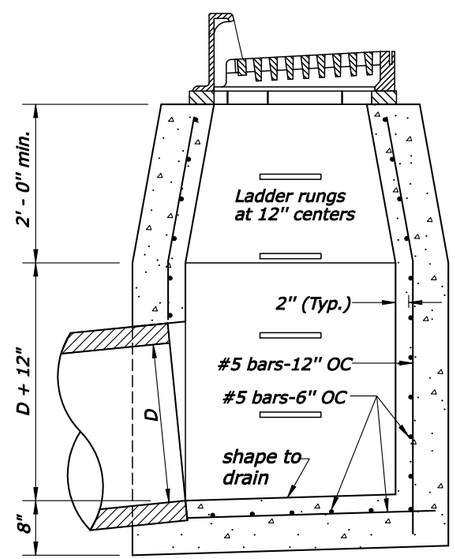

Ample Headroom

SECTION A-A

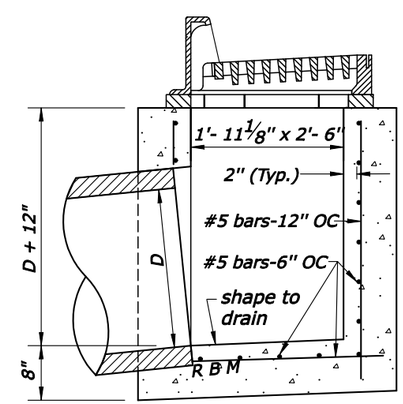

For minimum inside inlet dimensions only

SECTION A-A

Notes:

1. At the option of the Contractor walls less than 4 feet may be of concrete as shown.
2. Construct Type A inlets for pipes 24 inch and larger "For Ample Headroom", unless otherwise directed by the CO.
3. Construct inlets parallel to the roadway centerline and grade. Adapt inlets as directed by the CO.
4. For frames and gratings minor variations in design and dimensions are permitted to allow manufacturers standards.

NO SCALE

U.S. DEPARTMENT OF TRANSPORTATION
FEDERAL HIGHWAY ADMINISTRATION
EASTERN FEDERAL LANDS HIGHWAY DIVISION

U.S. CUSTOMARY DETAIL

INLET, TYPE 6A

DETAIL APPROVED FOR USE

REVISED: 07/07

DETAIL E604-05

9/19/2007 3:15:16 PM M:\Standard\EFLHD_Standards & Details\Dsf60405_detail.dgn