REG	STATE	PROJECT	SHEET NO.	TOTAL SHEETS

NOTE:

1. Install gate post and brace panel as shown. Use 1/2" x 1" machine bolts and nuts.
2. Paint all of the fence posts and braces the same color as the gate.
3. Furnish concrete conforming to Section 601.
4. At a minimum, cattleguard widths are shoulder-to-shoulder, or traveled way widths plus 8', whichever is greater.

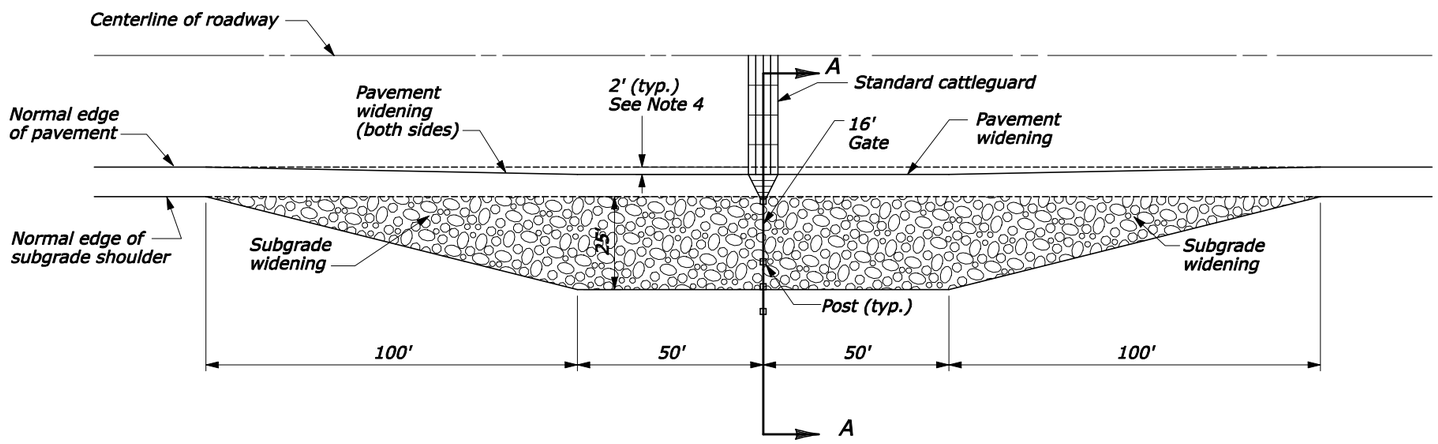

PLAN

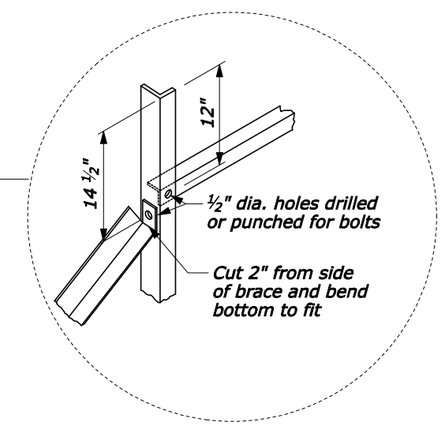

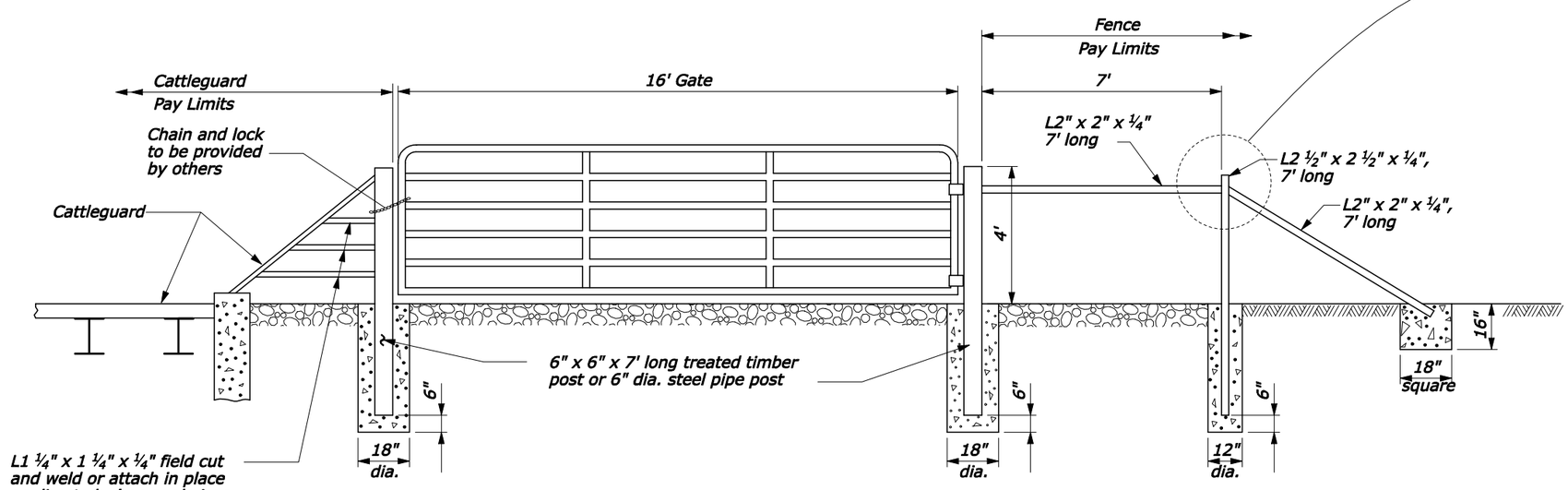

SECTION A-A

NO SCALE

U.S. DEPARTMENT OF TRANSPORTATION
FEDERAL HIGHWAY ADMINISTRATION
CENTRAL FEDERAL LANDS HIGHWAY DIVISION

U.S. CUSTOMARY DETAIL

CATTLEGUARD GATE AND WIDENING

DETAIL APPROVED FOR USE 07/2004

REVISED: 08/2006 04/2008

DETAIL C619-52

4/3/2008 10:31:37 AM L:\DESIGN\AD2\CFL Details Team\Web Ready\C619-52.dgn