Safety is a Part of Your Contract

PLANS FOR
LAKE PONTCHARTRAIN, LOUISIANA AND VICINITY
HURRICANE PROTECTION
HIGH LEVEL PLAN
ORLEANS PARISH, LA.

LONDON AVE. OUTFALL CANAL, PARALLEL PROTECTION

FLOODPROOFING OF MIRABEAU AVE. AND FILMORE AVE. BRIDGES

US Army Corps
of Engineers
New Orleans District
2001

DRAWINGS IN THIS FOLIO
HAVE BEEN REDUCED ONE
HALF THE ORIGINAL SCALE

VALUE INCENTIVE CLAUSES ENGINEERING
YOUR KEY TO HIGHER PROFITS

C·A·D

H-4-44674

9362b1.DWG PLOT SCALE: 12

PLOT 1=1

3-12-01

Safety is a Part of Your Contract

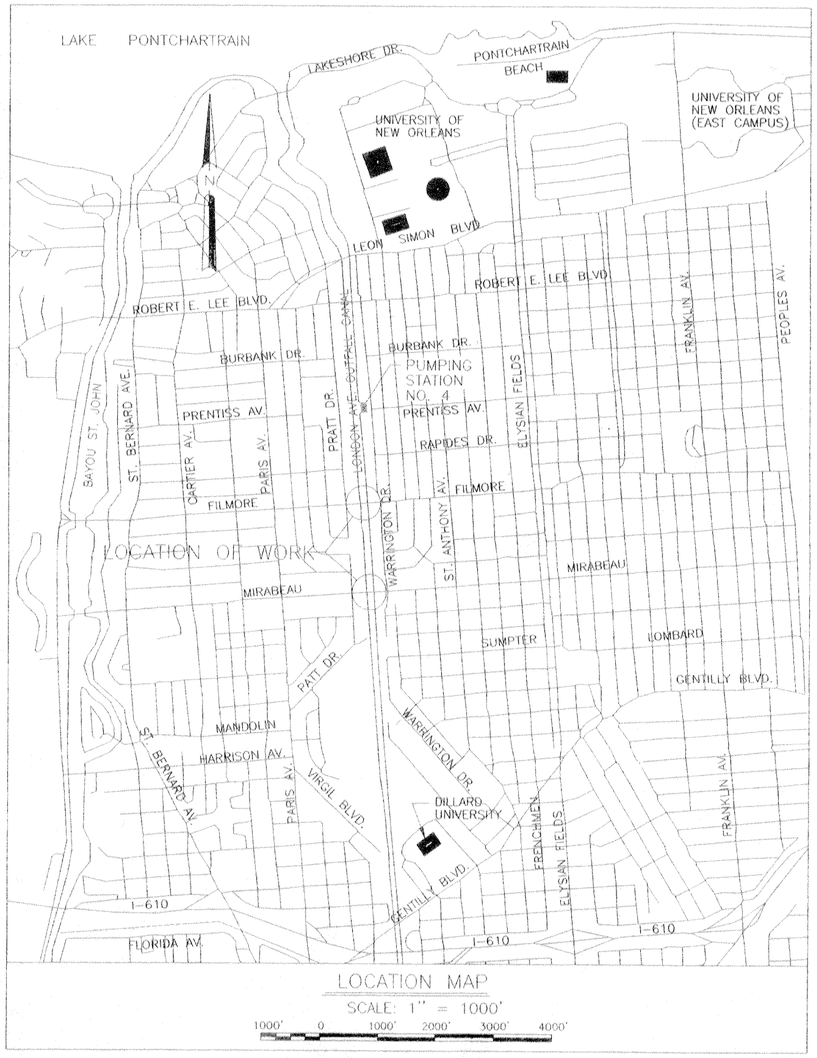

LOCATION MAP

SCALE: 1" = 1000'

1000' 0 1000' 2000' 3000' 4000'

TABULATION OF BENCH MARK

DESIGNATION	DESCRIPTION	ELEVATION
P 153	AT NEW ORLEANS, ABOUT 0.8 MILES WEST ALONG LAKESHORE DR FROM THE WEST SIDE OF THE TRAFFIC CIRCLE AT THE JUNCTION OF ELYSIAN FIELDS AVE., ABOUT 0.55 MI. NE ALONG LAKE TERRACE DR. FROM THE EAST END OF THE LAKESHORE DR. BRIDGE OVER BAYOU ST. JOHN, THENCE 0.1 MI. EAST ALONG LAKESHORE DR. TO THE BRIDGE ACROSS LONDON AVE. CANAL SET IN THE TOP OF THE EAST END OF PEDESTRIAN WALK ALONG THE SOUTH SIDE OF THE BRIDGE OVER THE EAST ABUTMENT OF THE BRIDGE, 5 FT. SOUTH OF THE SOUTH CURB OF THE DRIVE, 6 IN. WEST OF THE EAST END OF THE BRIDGE AND ABOUT 1 FT. ABOVE THE DRIVE.	10.39 N.G.V.D. (1991 EPOCH)

VALUE ENGINEERING INCENTIVE CLAUSES — YOUR KEY TO HIGHER PROFITS

INDEX TO DRAWINGS

DWG.	TITLE
1	TITLE SHEET
2	INDEX, LOCATION, AND VICINITY MAP
3	LEGEND AND ABBREVIATIONS
4	GENERAL NOTES
5	RIGHT-OF-WAY PLAN & CONSTRUCTION EASEMENT - MIRABEAU AVE. BRIDGE
6	RIGHT-OF-WAY ACCESS & STAGING AREA - MIRABEAU AVE. BRIDGE
7	BRIDGE PLAN & PROFILE - MIRABEAU AVE. BRIDGE
8	TRAFF. CTRL. & DEVICES PLAN & NOTES - MIRABEAU AVE. BRIDGE
9	EXISTING BRIDGE - MIRABEAU AVE. BRIDGE
10	DEMOLITION PLAN - MIRABEAU AVE. BRIDGE
11a-11b	EXIST. LONDON AVE. CANAL SECTIONS - MIRABEAU AVE. BRIDGE
12	UTILITY PLAN - MIRABEAU AVE. BRIDGE
13-14c	UTILITY RELOCATIONS - MIRABEAU AVE. BRIDGE
15-16	ELECTRICAL FEEDER PLANS - MIRABEAU AVE. BRIDGE
17	BRIDGE STRUCTURE PLAN & ELEVATION - MIRABEAU BRIDGE
18a	FLOODWALL PLAN - MIRABEAU AVE. BRIDGE
18b	BRIDGE & CANAL - SECTIONS - MIRABEAU AVE. BRIDGE
19	ABUTMENT AND I-WALL PROFILES - MIRABEAU AVE. BRIDGE
20	DETAILED FLOODWALL PLAN - MIRABEAU AVE. BRIDGE
21-23	JOINT DETAILS - MIRABEAU AVE. BRIDGE
24	SHEET PILE DETAILS - MIRABEAU AVE. BRIDGE
25a	I-WALL REINFORCING & DETAILS - MIRABEAU AVE. BRIDGE
25b	ARCHITECTURAL FINISH
26-27	PEDESTRIAN GATE DETAILS - MIRABEAU AVE. BRIDGE
28	PRE-STRESSED CONCRETE PILES - MIRABEAU AVE. BRIDGE
29	APPROACH SLAB - MIRABEAU AVE. BRIDGE
30	ABUTMENT PLAN & ELEVATIONS - MIRABEAU AVE. BRIDGE
31	ABUTMENT DETAILS - MIRABEAU AVE. BRIDGE
32	ABUTMENT JOINTS & PARAPET WALL DETAILS - MIRABEAU AVE. BRIDGE
33	INTERMED. BENT PLAN & ELEV. - MIRABEAU AVE. BRIDGE
34	SLAB SPAN 1 - MIRABEAU AVE. BRIDGE
35	SLAB SPAN 2 - MIRABEAU AVE. BRIDGE
36	SLAB SPAN 3 - MIRABEAU AVE. BRIDGE
37	SLAB SPAN 4 - MIRABEAU AVE. BRIDGE
38	SLAB SPAN 5 - MIRABEAU AVE. BRIDGE
39	SLAB SPAN 6 - MIRABEAU AVE. BRIDGE
40	ROADWAY ELEVATIONS - MIRABEAU AVE. BRIDGE
41	TYPICAL ROADWAY SECTIONS - MIRABEAU AVE. BRIDGE
42	TYP. ROADWAY SEC. & SIDEWALK DETAILS - MIRABEAU AVE.
43a-43b	ROADWAY CROSS SECTIONS - MIRABEAU AVE. BRIDGE
44	PERMANENT PAVEMENT MARKINGS - MIRABEAU AVE. BRIDGE
45	RIGHT-OF-WAY PLAN & CONSTRUCTION EASEMENT - FILMORE AVE. BRIDGE
46	RIGHT-OF-WAY ACCESS & STAGING AREA - FILMORE AVE. BRIDGE
47	BRIDGE PLAN & PROFILE - FILMORE AVE. BRIDGE
48	TRAFF. CTRL. & DEVICES PLAN & NOTES - FILMORE AVE. BRIDGE
49	EXISTING BRIDGE - FILMORE AVE. BRIDGE
50	DEMOLITION PLAN - FILMORE AVE. BRIDGE
51a-51b	EXIST. LONDON AVE. CANAL SECTIONS - FILMORE AVE. BRIDGE
52	UTILITY PLAN - FILMORE AVE. BRIDGE
53-54b	UTILITY RELOCATIONS - FILMORE AVE. BRIDGE
55-56	ELECTRICAL FEEDER PLANS - FILMORE AVE. BRIDGE
57	BRIDGE STRUCTURE PLAN & ELEVATION - MIRABEAU BRIDGE
58a	FLOODWALL PLAN - FILMORE AVE. BRIDGE
58b	BRIDGE & CANAL - SECTIONS - FILMORE AVE. BRIDGE
59	ABUTMENT AND I-WALL PROFILES - FILMORE AVE. BRIDGE
60	DETAILED FLOODWALL PLAN - FILMORE AVE. BRIDGE
61-63	JOINT DETAILS - FILMORE AVE. BRIDGE
64	SHEET PILE DETAILS - FILMORE AVE. BRIDGE
65	I-WALL REINFORCING & DETAILS - FILMORE AVE. BRIDGE
66-67	PEDESTRIAN GATE DETAILS - FILMORE AVE. BRIDGE
68	PRE-STRESSED CONCRETE PILES - FILMORE AVE. BRIDGE
69	APPROACH SLAB - FILMORE AVE. BRIDGE
70	ABUTMENT PLAN & ELEVATIONS - FILMORE AVE. BRIDGE
71	ABUTMENT DETAILS - FILMORE AVE. BRIDGE
72	ABUTMENT JOINTS & PARAPET WALL DETAILS - FILMORE AVE. BRIDGE
73	INTERMED. BENT PLAN & ELEV. - FILMORE AVE. BRIDGE
74	SLAB SPAN 1 - FILMORE AVE. BRIDGE
75	SLAB SPAN 2 - FILMORE AVE. BRIDGE
76	SLAB SPAN 3 - FILMORE AVE. BRIDGE
77	SLAB SPAN 4 - FILMORE AVE. BRIDGE
78	SLAB SPAN 5 - FILMORE AVE. BRIDGE
79	ROADWAY ELEVATIONS - FILMORE AVE. BRIDGE
80	TYPICAL ROADWAY SECTIONS - FILMORE AVE. BRIDGE
81	TYP. ROADWAY SEC. & SIDEWALK DETAILS - FILMORE AVE. BRIDGE
82a-82d	ROADWAY CROSS SECTIONS - FILMORE AVE. BRIDGE
83	PERMANENT PAVEMENT MARKINGS - FILMORE AVE. BRIDGE
84	PEDESTRIAN GATE DETAILS
85	PEDESTRIAN GATE SEAL DETAILS
86	PEDESTRIAN GATE LATCHING DETAILS
87	COMPRESSION PILE TEST
88-90	BORING LOGS
	-- LA DOTD STANDARD PLANS --
91	YEAR PLATES
92-93	STRIP JOINT DETAIL
94	BAR SUPPORTS FOR REINFORCING STEEL
95-97	HIGHWAY SIGN AND BARRICADE DETAILS FOR CONSTRUCTION

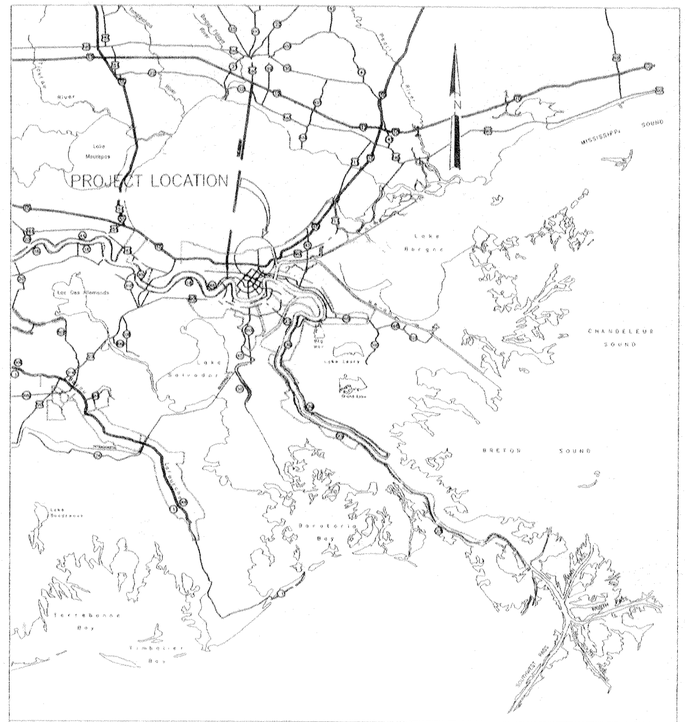

VICINITY MAP

SCALE IN MILES

10 0 10 20 30 40 50

THIS PROJECT WAS DESIGNED BY THE FIRM OF MEYER ENGINEERS, LTD. FOR THE NEW ORLEANS DISTRICT OF THE U.S. ARMY CORPS OF ENGINEERS. THE INITIALS OR SIGNATURES AND REGISTRATION DESIGNATIONS OF USACE EMPLOYEES APPEARING ON THESE PROJECT DOCUMENTS ARE WITHIN THE SCOPE OF THEIR EMPLOYMENT AS REQUIRED BY ER 1110-1-8152.

SYMBOL	DESCRIPTION	DATE	APPROVED

REVISIONS

U.S. ARMY ENGINEER DISTRICT, NEW ORLEANS
CORPS OF ENGINEERS
NEW ORLEANS, LOUISIANA

BOARD OF LEVEE COMMISSIONERS
ORLEANS LEVEE DISTRICT
NEW ORLEANS, LOUISIANA

MEYER ENGINEERS, LTD. METAIRIE, LOUISIANA

LAKE PONTCHARTRAIN, LA. AND VICINITY
HIGH LEVEL PLAN

LONDON AVE. OUTFALL CANAL, PARALLEL PROTECTION
FLOODPROOFING OF
MIRABEAU AVE. BRIDGE
FILMORE AVE. BRIDGE
ORLEANS PARISH, LOUISIANA

INDEX, LOCATION AND VICINITY MAP

DESIGNED BY: JCS	APPROVED BY:	CADD FILE: FRMINDEX.DGN	
DRAWN BY: MCM	CHIEF, ENGINEERING BRANCH (T)	PLOT DATE: 6-27-01	PLOT SCALE: 200
CHECKED BY: JCS	APPROVED BY:	SOLICITATION NO.: DACW29-01-B-0082	
DATE: 3-12-01	CHIEF, ENGINEERING DIVISION	FILE NO. H-4-44674	
SUBMITTED BY: MEYER ENGINEERS, LTD.	APPROVED BY: COLONEL, C. E. DISTRICT ENGINEER	DWG. 2 OF 97	
APPROVED BY:			

C•A•D

Safety is a Part of Your Contract

LEGEND OF SYMBOLS (EXISTING)

- BASELINE
- SS — GRAVITY SANITARY SEWER MAIN
- SD — STORM SEWER MAIN
- FM — FORCE MAIN
- W — WATER MAIN
- G — GAS MAIN
- T — TELEPHONE LINE
- E — ELECTRIC LINE
- R.O.W.
- DITCH
- SANITARY SEWER MANHOLE
- CLEANOUT
- EX. LIFT STATION
- EX. VALVE PIT
- DROP INLET
- CATCH BASIN
- STORM SEWER MANHOLE
- CULVERT
- DITCH
- WATER VALVE
- WATER METER
- FIRE HYDRANT
- WATER MANHOLE
- GAS VALVE
- GAS METER
- TELEPHONE MANHOLE
- POWER POLE
- LIGHT STAND
- MAILBOX
- TREE
- ROD SET
- FENCE
- MISCELLANEOUS SIGN
- GAS VENT
- TELEPHONE POST
- ELEVATION
- CONCRETE
- ASPHALT CONCRETE
- SHELL
- LIMITS OF EXISTING PAVEMENT
- EX. — EXISTING
- +ELEV. — ELEVATION
- TEMP. — TEMPORARY
- LIFT STA — LIFT STATION

VALUE ENGINEERING — INCENTIVE CLAUSES — YOUR KEY TO HIGHER PROFITS

LEGEND OF SYMBOLS (NEW)

- SS — GRAVITY SANITARY SEWER MAIN
- SD — STORM SEWER MAIN
- FM — FORCE MAIN
- W — WATER MAIN
- G — GAS MAIN
- T — TELEPHONE LINE
- E — ELECTRIC LINE
- REQUIRED R.O.W.
- MANHOLE
- CLEANOUT
- NEW LIFT STATION
- NEW VALVE PIT
- DROP INLET
- CATCH BASIN
- FORCE MAIN AIR RELEASE VALVE
- CULVERT
- WATER VALVE
- WATER METER
- FIRE HYDRANT
- ELECTRIC SERVICE LINE
- AIR RELEASE VALVE
- POWER POLE
- ASPHALT WEARING COURSE
- ASPHALT BINDING COURSE
- SAND
- ELEVATION
- REMOVE AND REPLACE SURFACE
- ELEV. — ELEVATION
- SB — SOIL BORING
- TP — TEST PILE

ABBREVIATIONS

&	AND
<	ANGLE
CL	CENTERLINE
0	DIAMETER OR ROUND
#	NUMBER
AC	ASBESTOS CEMENT
A.D.	AREA DRAIN
ADD.	ADDENDUM
A/E	ARCHITECT OR ENGINEER
ALT.	ALTERNATE
APPROX.	APPROXIMATE
ASPH.	ASPHALT
AVE.	AVENUE
AVG.	AVERAGE
BITUM.	BITUMINOUS
B/L	BASELINE
BLDG.	BUILDING
BM	BENCH MARK
BRG.	BEARING
CPA	CONCRETE PIPE ARCH
CB	CATCH BASIN
C.D.	CAIRO DATUM
CFS	CUBIC FEET PER SECOND
CI	CAST IRON
C.J.	CONTRACTION JOINT
CMP	CORRUGATED METAL PIPE
CMPA	CORRUGATED METAL PIPE ARCH
CO	CLEAN OUT
C.O.E.	CORPS OF ENGINEERS
CONC.	CONCRETE
CONT.	CONTINUOUS
CSP	CORRUGATED STEEL PIPE
CULV.	CULVERT
DEPT.	DEPARTMENT
DI	DUCTILE IRON OR DROP INLET
DIA.	DIAMETER
DIM.	DIMENSION
DR.	DRIVE
DRWY.	DRIVEWAY
DTL.	DETAIL
E.	EAST
EA.	EACH
E.B.	EAST BOUND
E.J.	EXPANSION JOINT
EL.	ELEVATION
ELEC.	ELECTRICAL
EMB.	EMBANKMENT
ENCL.	ENCLOSURE
EQUA.	EQUATION
E.W.	EACH WAY
EXIST.	EXISTING
EXP.	EXPANSION
FH	FIRE HYDRANT
F.L.	FLOW LINE
FM	FORCE MAIN
FT.	FOOT OR FEET
GA.	GAUGE
GAL.	GALLON
GPM	GALLONS PER MINUTE
H/C	HANDICAPPED
HGT.	HEIGHT
HP	HORSEPOWER
H.P.	HIGH PRESSURE
HORIZ.	HORIZONTAL
HWY.	HIGHWAY
ID	INSIDE DIAMETER (DIM.)
IN.	INCH
INT.	INTERIOR
INV.	INVERT
IR	IRON ROD
JCT.	JUNCTION
JT.	JOINT
L.	LEFT
LB.	POUND
LF	LINEAR FOOT
LS	LUMP SUM
L.S.	LIFT STATION
MAX.	MAXIMUM
MECH.	MECHANICAL
MFR.	MANUFACTURER
MFR'D.	MANUFACTURED
MH	MANHOLE
MIN.	MINIMUM
MISC.	MISCELLANEOUS
M.S.L.	MEAN SEA LEVEL
MTL.	METAL
N.	NORTH
N/A	NOT APPLICABLE
N.D.P.	NO DIRECT PAYMENT
N.G.V.D.	NATIONAL GEODETIC VERTICAL DATUM
N.I.C.	NOT IN CONTRACT
NOM.	NOMINAL
N.T.S.	NOT TO SCALE
O.C.	ON CENTER
OD	OUTSIDE DIAMETER (DIM.)
OPP.	OPPOSITE
PC	POINT OF CURVATURE
P.C.C.P.	PORTLAND CEMENT CONCRETE PAVEMENT
PI	POINT OF INTERSECTION
PL	PROPERTY LINE
POT	POINT OF TANGENT
P.P.	POWER POLE
PREFAB.	PREFABRICATED
PSI	POUNDS PER SQUARE INCH
PT.	POINT
PVC	POLYVINYL PIPE
QTR.	QUARTER
QTY.	QUANTITY
r	RADIUS
R.	RIGHT
RCPA	REINFORCED CONCRETE PIPE ARCH
RCB	REINFORCED CONCRETE BOX
RCP	REINFORCED CONCRETE PIPE
RD.	ROAD
REF.	REFERENCE
REINF.	REINFORCED
REQ'D.	REQUIRED
REV.	REVISION
ROW	RIGHT OF WAY
RPM	RPM REVOLUTION PER MINUTE
S.	SOUTH
SD	STORM DRAIN
SECT.	SECTION
SFM	SEWERAGE FORCE MAIN
SG	STREET SIGN
SIM.	SIMILAR
SMH	SEWER MAN HOLE
SPEC.	SPECIFICATION(S)
SQ.	SQUARE
ST.	STREET
STA	STATION
STD.	STANDARD
STL.	STEEL
STOR.	STORAGE
S.W.	SIDEWALK
SYM.	SYMMETRICAL
SYS.	SYSTEM
TBM	TEMPORARY BENCH MARK
T.C.	TOP OF CASTING, TOP OF CURB, OR TOP OF CONCRETE
TEL.	TELEPHONE
T.O.C.	TOP OF CASTING, TOP OF CURB, OR TOP OF CONCRETE
T.O.P.	TOP OF PAVEMENT, OR TOP OF PIPE
T/W	TOP OF WALL
TYP.	TYPICAL
U.G.	UNDERGROUND
U.P.	UTILIZATION PRESSURE
VERT.	VERTICAL
VOL.	VOLUME
W.B.	WEST BOUND
W.	WEST
W/	WITH
W/O	WITHOUT
WT.	WEIGHT
WSE	WATER SURFACE ELEVATION
W.W.F.	WELDED WIRE FABRIC
YD.	YARD

SECTION AND DETAIL CROSS REFRENCES

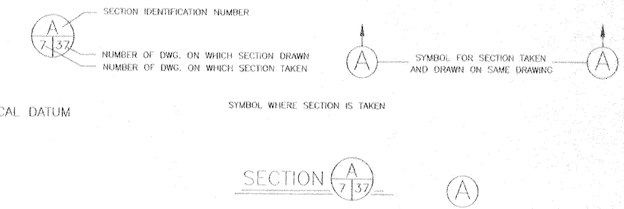

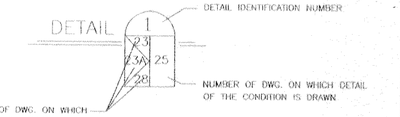

SYMBOL	DESCRIPTION	DATE	APPROVED

REVISIONS

U.S. ARMY ENGINEER DISTRICT, NEW ORLEANS
CORPS OF ENGINEERS
NEW ORLEANS, LOUISIANA

BOARD OF LEVEE COMMISSIONERS
ORLEANS LEVEE DISTRICT
NEW ORLEANS, LOUISIANA

MEYER ENGINEERS, LTD. METAIRIE, LOUISIANA

LAKE PONTCHARTRAIN, LA. AND VICINITY
HIGH LEVEL PLAN

LONDON AVE. OUTFALL CANAL, PARALLEL PROTECTION FLOODPROOFING OF FILMORE AVE. & MIRABEAU AVE. BRIDGES

ORLEANS PARISH, LOUISIANA

LEGEND AND ABBREVIATIONS

DESIGNED BY: JCS	DATE: 3-12-01	PLOT SCALE: 1"=10'	PLOT DATE: 6-27-01
DRAWN BY: MCM			
CHECKED BY: JCS	CADD FILE: 936203		FILE NO. H-4-44674
SUBMITTED BY: MEYER ENGINEERS, LTD. DESIGN ENGINEER	SOLICITATION NO. DACW29-01-B-0092		DWG. 3 OF 97

Safety is a Part of Your Contract

GENERAL NOTES

1. DESIGN SPECIFICATIONS
BRIDGES: THE 1992 STANDARD SPECIFICATIONS FOR HIGHWAY BRIDGES OF THE AMERICAN ASSOCIATION OF STATE HIGHWAY AND TRANSPORTATION OFFICIALS (AASHTO) FIFTEENTH EDITION AS AMENDED BY THE CURRENT AASHTO INTERIM SPECIFICATIONS FOR BRIDGES.

2. FLOOD PROTECTION: U.S. ARMY CORPS OF ENGINEERS, EM 1110-2-2104 DATED APRIL 30, 1992.

3. CONSTRUCTION SPECIFICATION
U.S. ARMY CORPS OF ENGINEERS
PROJECT TECHNICAL SPECIFICATIONS.

4. DESIGN SPEED
MIRABEAU AVE. - 30 MPH
FILMORE AVE. - 35 MPH

5. DESIGN LOADS
DEAD LOADS - ESTIMATED WEIGHT OF COMPLETED STRUCTURE INCLUDING AN ALLOWANCE OF 12 PSF FOR FUTURE WEARING SURFACE.
LIVE LOADS - HS20-44 LOADING AS SHOWN ON THIS SHEET.
ALL OTHER LOADS SHALL BE IN ACCORDANCE WITH AASHTO SPECIFICATIONS.

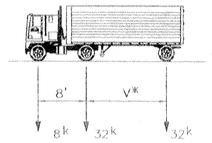

LADOTD HS-20-24 TRUCK
V* = VARIABLE 14-30FT

6. DESIGN CANAL WATER ELEVATION
HIGH LEVEL PLAN
STILL WATER LEVEL - EL. 11.9 N.G.V.D.
(100% OF DESIGN FORCES USED.)

7. DESIGN CRITERIA
ALL STRUCTURAL MEMBERS ARE DESIGNED BY LOAD FACTOR METHOD UNLESS OTHERWISE NOTED.

8. DIMENSIONS
DIMENSIONS AND/OR ELEVATIONS MARKED THUS (±) ARE APPROXIMATE. CONTRACTOR SHALL VERIFY ACTUAL DIMENSIONS IN FIELD. DIMENSIONS AND/OR ELEVATIONS MARKED THUS (N.T.S.) ARE NOT SHOWN TO SCALE. DRAWINGS ARE GENERALLY TO SCALE, BUT SHOULD NOT BE SCALED. N.T.S. IS SHOWN ONLY WHERE DRAWING IS OBVIOUSLY OUT OF SCALE.

9. SOILS INVESTIGATION
A SOILS INVESTIGATION WAS PERFORMED FOR THIS PROJECT. BORING LOGS ARE INCLUDED IN THESE CONTRACT DRAWINGS AND SPECIFICATIONS.

10. PILES
ALL PILE REQUIREMENTS INCLUDING SIZE, TYPE AND MAXIMUM DESIGN LOAD, AND TEST PILE REQUIREMENTS AS TO LOCATION AND TEST LOADING SHALL BE AS DESCRIBED ON THE PLANS OR IN THE SPECIFICATIONS. LENGTH OF PILES PROVIDED ARE FOR ESTIMATING PURPOSES ONLY.

11. STRUCTURAL STEELWORK
ANCHOR BOLTS SHALL BE ASTM A-325 RODS. STRUCTURAL STEEL SHALL CONFORM TO ASTM A 36 UNLESS OTHERWISE NOTED. FABRICATION SHALL MEET THE REQUIREMENTS OF THE PROJECT SPECIFICATIONS.

12. STRUCTURAL CONCRETE
CHAMFER ALL EXPOSED EDGES OF CONCRETE 3/4" EXCEPT ALL CORNERS OF BENTS WHICH SHALL BE CHAMFERED 1-1/2" UNLESS OTHERWISE NOTED. NO DEDUCTIONS ARE TO BE MADE IN CONCRETE QUANTITIES FOR CHAMFERS 1-1/2" OR LESS.

13. FINISH DESCRIPTIONS SHOWN HEREIN ARE DESCRIBED IN THE PROJECT SPECIFICATIONS.

14. REINFORCEMENT
ALL REINFORCING STEEL BARS SHALL BE DEFORMED STEEL BARS CONFORMING TO ASTM 615, ASTM 616, ASTM 617.

15. DIMENSIONS RELATING TO REINFORCING STEEL FABRICATION ARE OUT TO OUT OF BAR UNLESS OTHERWISE NOTED. DIMENSIONS RELATING TO REINFORCING STEEL SPACING ARE CENTER TO CENTER OF BAR. THE MINIMUM COVERING FROM THE SURFACE OF THE CONCRETE TO THE FACE OF ANY DEFORMED REINFORCING BAR SHALL NOT BE LESS THAN THE FOLLOWING:

TOP OF SLAB = 2"

16. ALL OTHER REINFORCING STEEL COVER SHALL BE 3" UNLESS OTHERWISE NOTED IN THE PLANS.

17. MECHANICAL SPLICES FOR REINFORCING BARS SHALL BE APPROVED BY THE CONTRACTING OFFICER. THE EMBEDMENT AND LAP SPLICE LENGTH TABLE ON THIS SHEET SHALL BE USED IN DETERMINING LAP SPLICES AND EMBEDMENT LENGTHS WHERE LENGTHS ARE NOT OTHERWISE INDICATED. SPLICE LENGTHS SHALL BE BASED ON THE SMALLER BAR BEING LAPPED. THE CONTRACTOR WILL BE ALLOWED TO MAKE SPLICES IN ADDITION TO THOSE INDICATED IN THE DRAWINGS, WHERE ESSENTIAL TO CONSTRUCTIBILITY, SUBJECT TO APPROVAL BY THE CONTRACTING OFFICER. SPLICES OTHER THAN THOSE SHOWN ON THE DRAWINGS AND OTHER THAN ANY ADDITIONAL SPLICES REQUIRED BY THE CONTRACTING OFFICER, WILL BE AT THE CONTRACTOR'S EXPENSE.

REINFORCEMENT EMBEDMENT AND SPLICE TABLES

BAR SIZE	BASIC TABLE				ALTERNATE TABLE			
	MINIMUM EMBEDMENT LENGTH, INCHES		MINIMUM LAP LENGTH INCHES		MINIMUM EMBEDMENT LENGTH, INCHES		MINIMUM LAP LENGTH INCHES	
	TOP	OTHER	TOP	OTHER	TOP	OTHER	TOP	OTHER
3	18	14	24	18	12	12	14	12
4	25	19	32	25	15	12	19	15
5	31	24	40	31	18	14	24	18
6	37	28	48	37	22	17	29	22
7	54	42	70	54	32	25	42	32
8	62	47	80	62	37	28	48	37
9	69	53	90	69	42	32	54	42
10	77	59	100	77	46	36	60	46
11	85	65	110	85	51	39	66	51

18. EMBEDMENT AND SPLICE NOTES:

1. USE THE BASIC TABLE IF ALL OF THE FOLLOWING CONDITIONS ARE MET:
   A.) CENTER TO CENTER BAR SPACING LATERALLY IS AT LEAST 3 BAR DIAMETERS.
   B.) DISTANCE FROM THE CENTER OF A BAR TO THE NEAREST CONCRETE SURFACE MUST BE AT LEAST 2 BAR DIAMETERS.
2. THE ALTERNATE TABLE MAY BE USED IF ALL OF THE FOLLOWING CONDITIONS ARE MET:
   A.) CENTER TO CENTER BAR SPACING LATERALLY IS AT LEAST 5 BAR DIAMETERS.
   B.) DISTANCE FROM THE CENTER OF A BAR TO THE NEAREST CONCRETE SURFACE MUST BE AT LEAST 2 1/2 BAR DIAMETERS.
3. IF CONCRETE COVER OR EDGE DISTANCE IS LESS THAN 1 BAR DIAMETER OR THE CENTER TO CENTER BAR SPACING LATERALLY IS LESS THAN 3 DIAMETERS, SEE ACI 318 FOR APPROPRIATE GUIDANCE.
4. TOP BARS ARE HORIZONTAL BARS AND BARS INCLINED LESS THAN 45 DEGREES WITH RESPECT TO A HORIZONTAL PLANE WHICH ARE PLACED SUCH THAT MORE THAN 12 INCHES OF CONCRETE IS CAST IN THE MEMBER BELOW THE BAR.
5. THE TABLES SHOWN ABOVE ARE FOR NORMAL WEIGHT CONCRETE AND UNCOATED REINFORCING BARS. IF LIGHTWEIGHT CONCRETE OR EPOXY COATED BARS ARE USED, SEE ACI 318 FOR ADDITIONAL CONSIDERATIONS.

WORK ON MIRABEAU AVENUE BRIDGE AND ALL OTHER ASSOCIATED AND INCIDENTAL WORK FOR THE MIRABEAU AVENUE BRIDGE SHALL NOT BEGIN UNTIL THE FILMORE AVENUE BRIDGE IS OPENED TO VEHICULAR AND PEDESTRIAN TRAFFIC.

VALUE INCENTIVE CLAUSES
YOUR KEY TO HIGHER PROFITS
VALUE ENGINEERED

C-A-D

SYMBOL	DESCRIPTION	DATE	APPROVED
	REVISIONS		

U.S. ARMY ENGINEER DISTRICT, NEW ORLEANS
CORPS OF ENGINEERS
NEW ORLEANS, LOUISIANA

BOARD OF LEVEE COMMISSIONERS
ORLEANS LEVEE DISTRICT
NEW ORLEANS, LOUISIANA

MEYER ENGINEERS, LTD. METAIRIE, LOUISIANA

LAKE PONTCHARTRAIN, LA. AND VICINITY
HIGH LEVEL PLAN
LONDON AVE. OUTFALL CANAL, PARALLEL PROTECTION FLOODPROOFING OF FILMORE AVE. & MIRABEAU AVE. BRIDGES
ORLEANS PARISH, LOUISIANA

GENERAL NOTES

DESIGNED BY: JCS	DATE: 3-12-01	PLOT SCALE: 1"=1'	PLOT DATE: 6-27-01
DRAWN BY: MCM			
CHECKED BY: JCS	CADD FILE: 936284		FILE NO. H-4-44674
SUBMITTED BY: MEYER ENGINEERS, LTD. DESIGN ENGINEER	SOLICITATION NO. DACW29-01-B-0092		DWG. 4 OF 97

Safety is a Part of Your Contract

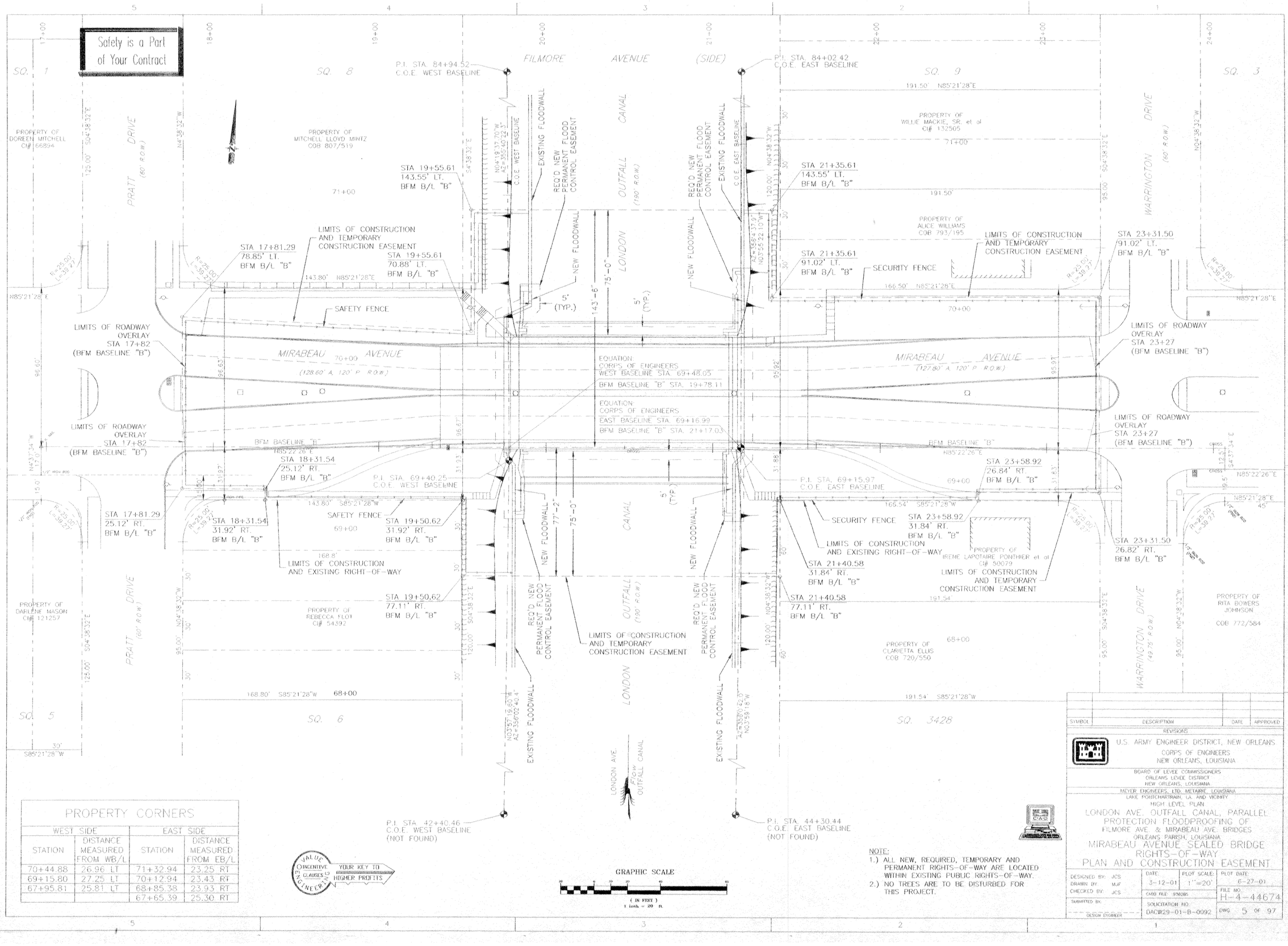

PROPERTY CORNERS

WEST SIDE		EAST SIDE	
STATION	DISTANCE MEASURED FROM WB/L	STATION	DISTANCE MEASURED FROM EB/L
70+44.88	26.96 LT	71+32.94	23.25 RT
69+15.80	27.25 LT	70+12.94	23.43 RT
67+95.81	25.81 LT	68+85.38	23.93 RT
		67+65.39	25.30 RT

VALUE INCENTIVE ENGINEERING CLAUSES — YOUR KEY TO HIGHER PROFITS

GRAPHIC SCALE
20 0 20 40 60
(IN FEET)
1 inch = 20 ft.

NOTE:
1.) ALL NEW, REQUIRED, TEMPORARY AND PERMANENT RIGHTS-OF-WAY ARE LOCATED WITHIN EXISTING PUBLIC RIGHTS-OF-WAY.
2.) NO TREES ARE TO BE DISTURBED FOR THIS PROJECT.

SYMBOL	DESCRIPTION	DATE	APPROVED

REVISIONS

U.S. ARMY ENGINEER DISTRICT, NEW ORLEANS
CORPS OF ENGINEERS
NEW ORLEANS, LOUISIANA

BOARD OF LEVEE COMMISSIONERS
ORLEANS LEVEE DISTRICT
NEW ORLEANS, LOUISIANA

MEYER ENGINEERS, LTD. METAIRIE, LOUISIANA
LAKE PONTCHARTRAIN, LA. AND VICINITY

HIGH LEVEL PLAN

LONDON AVE. OUTFALL CANAL, PARALLEL PROTECTION FLOODPROOFING OF FILMORE AVE. & MIRABEAU AVE. BRIDGES

ORLEANS PARISH, LOUISIANA

MIRABEAU AVENUE SEALED BRIDGE RIGHTS-OF-WAY PLAN AND CONSTRUCTION EASEMENT

DESIGNED BY: JCS	DATE: 3-12-01	PLOT SCALE: 1"=20'	PLOT DATE: 6-27-01
DRAWN BY: MJF			
CHECKED BY: JCS	CADD FILE: 95026		FILE NO. H-4-44674
SUBMITTED BY: DESIGN ENGINEER	SOLICITATION NO. DACW29-01-B-0092		DWG 5 OF 97

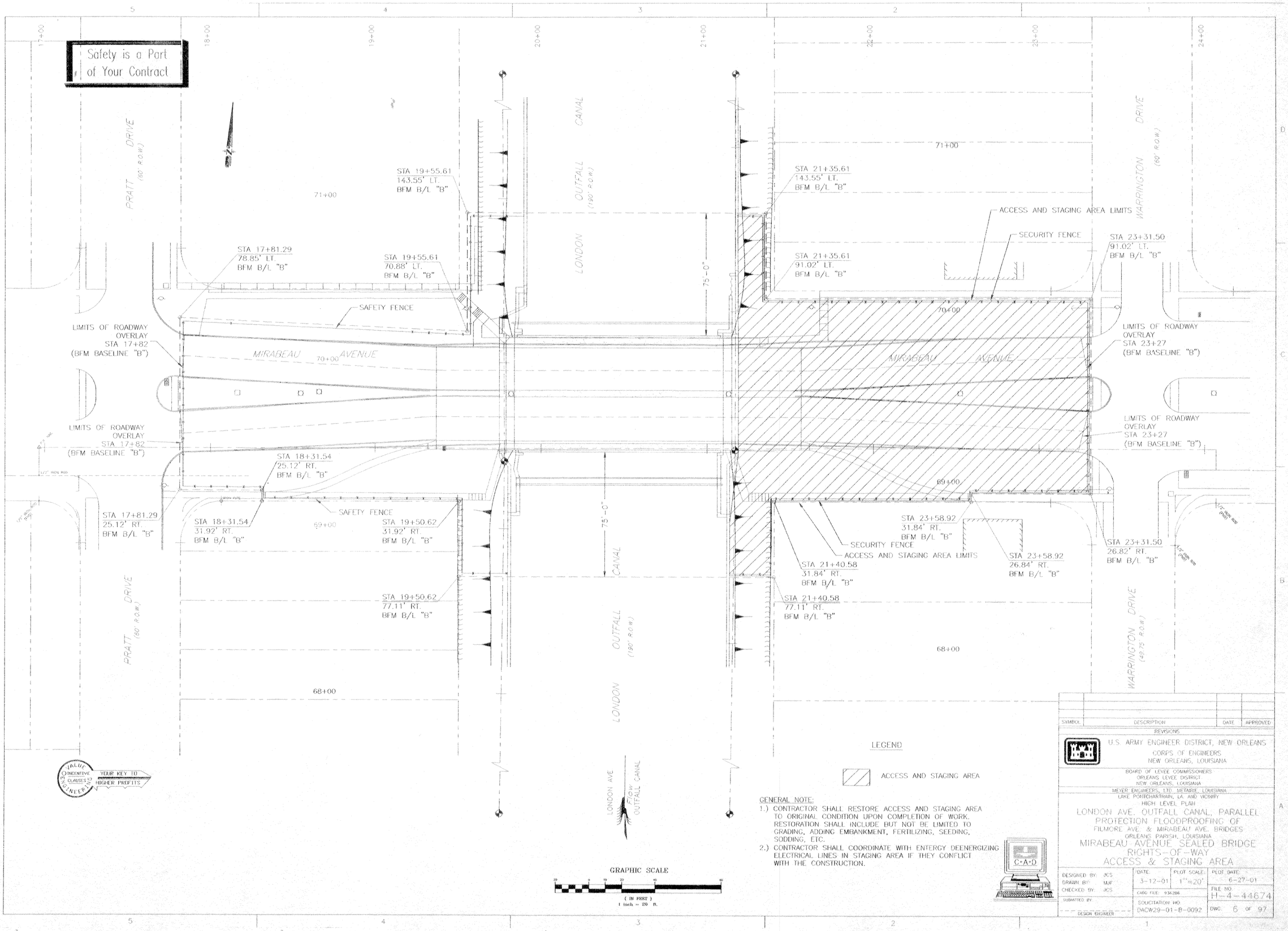

GENERAL NOTE:

1.) CONTRACTOR SHALL RESTORE ACCESS AND STAGING AREA TO ORIGINAL CONDITION UPON COMPLETION OF WORK. RESTORATION SHALL INCLUDE BUT NOT BE LIMITED TO GRADING, ADDING EMBANKMENT, FERTILIZING, SEEDING, SODDING, ETC.

2.) CONTRACTOR SHALL COORDINATE WITH ENTERGY DEENERGIZING ELECTRICAL LINES IN STAGING AREA IF THEY CONFLICT WITH THE CONSTRUCTION.

SYMBOL	DESCRIPTION	DATE	APPROVED

REVISIONS

U.S. ARMY ENGINEER DISTRICT, NEW ORLEANS
CORPS OF ENGINEERS
NEW ORLEANS, LOUISIANA

BOARD OF LEVEE COMMISSIONERS
ORLEANS LEVEE DISTRICT
NEW ORLEANS, LOUISIANA

MEYER ENGINEERS, LTD. METAIRIE, LOUISIANA
LAKE PONTCHARTRAIN, LA. AND VICINITY
HIGH LEVEL PLAN

LONDON AVE. OUTFALL CANAL, PARALLEL PROTECTION FLOODPROOFING OF FILMORE AVE. & MIRABEAU AVE. BRIDGES
ORLEANS PARISH, LOUISIANA

MIRABEAU AVENUE SEALED BRIDGE
RIGHTS-OF-WAY
ACCESS & STAGING AREA

DESIGNED BY: JCS DRAWN BY: MJF CHECKED BY: JCS	DATE: 3-12-01	PLOT SCALE: 1"=20'	PLOT DATE: 6-27-01
SUBMITTED BY: DESIGN ENGINEER	CADD FILE: 936286		FILE NO. H-4-44674
	SOLICITATION NO. DACW29-01-B-0092		DWG. 6 OF 97

Safety is a Part of Your Contract

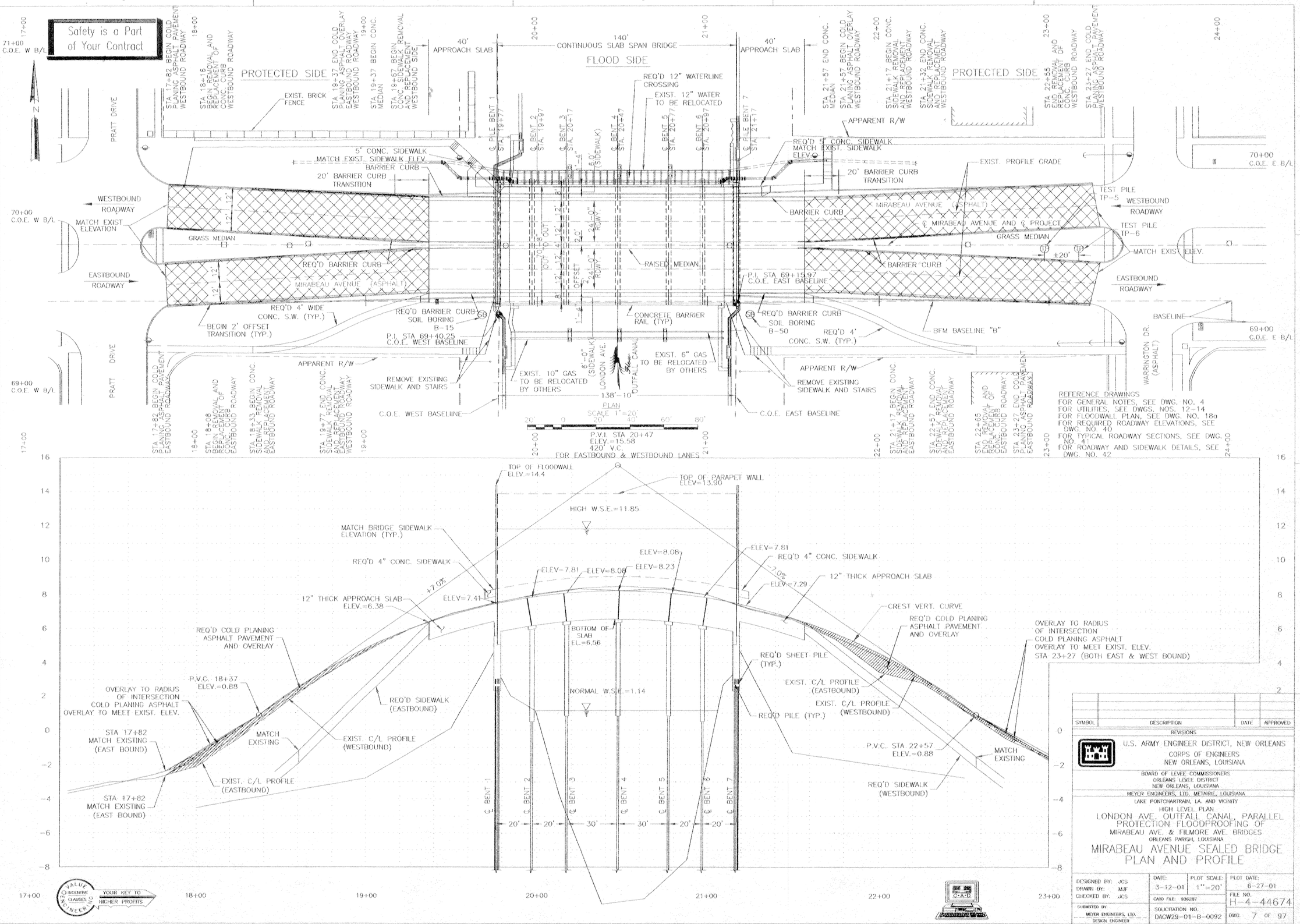

SYMBOL	DESCRIPTION	DATE	APPROVED
REVISIONS			

U.S. ARMY ENGINEER DISTRICT, NEW ORLEANS
CORPS OF ENGINEERS
NEW ORLEANS, LOUISIANA

BOARD OF LEVEE COMMISSIONERS
ORLEANS LEVEE DISTRICT
NEW ORLEANS, LOUISIANA

MEYER ENGINEERS, LTD. METAIRIE, LOUISIANA
LAKE PONTCHARTRAIN, LA. AND VICINITY

HIGH LEVEL PLAN
LONDON AVE. OUTFALL CANAL, PARALLEL PROTECTION FLOODPROOFING OF
MIRABEAU AVE. & FILMORE AVE. BRIDGES
ORLEANS PARISH, LOUISIANA

MIRABEAU AVENUE SEALED BRIDGE PLAN AND PROFILE

DESIGNED BY: JCS	DATE: 3-12-01	PLOT SCALE: 1"=20'	PLOT DATE: 6-27-01
DRAWN BY: MJF			
CHECKED BY: JCS	CADD FILE: 936287		FILE NO. H-4-44674
SUBMITTED BY: MEYER ENGINEERS, LTD. DESIGN ENGINEER	SOLICITATION NO. DACW29-01-B-0092		DWG. 7 OF 97

VALUE ENGINEERING INCENTIVE CLAUSES — YOUR KEY TO HIGHER PROFITS

Engineered with CADD

TRAFFIC CONTROL NOTES

1. THE DESIGN AND APPLICATION OF ALL SIGNALS , PAVEMENT MARKINGS, CHANNELIZING DEVICES, AND WARNING SIGNS SHALL CONFORM TO "MANUAL ON UNIFORM TRAFFIC CONTROL DEVICES", 1988 EDITION AS REVISED.
2. CHANNELIZING AND DELINEATION DEVICES SHALL BE USED TO MARK ALL CONSTRUCTION AREAS. THESE SHALL BE TYPE III BARRICADES, AND/OR BARRELS, ALL FULLY REFLECTORIZED WITH FLASHING LIGHTS.
3. ANY EXISTING TRAFFIC CONTROL DEVICE THAT IS NOT REQUIRED SHALL IMMEDIATELY BE REMOVED, COVERED AND/OR RELOCATED.
4. SIGNS, BARRELS, BARRICADES, STRIPING, BARRIERS AND ALL OTHER TRAFFIC CONTROL DEVICES SHOWN ON THESE DRAWINGS ARE REQUIRED FOR CONSTRUCTION OF THE PROJECT AND SHALL BE PROVIDED AND MAINTAINED BY THE CONTRACTOR.
5. ALL CONSTRUCTION MATERIAL AND EQUIPMENT SHALL BE STORED OUTSIDE OF THE ROADWAY SURFACE, CREATING NO SIGHT DISTANCE PROBLEMS, AND FULLY DELINEATED AS IN NOTE 2.
6. YELLOW, HIGH VISIBILITY PENNANT BARRIER FLAGGING (NYLON ROPE WITH PLASTIC PENNANTS) SHALL BE STRUNG BETWEEN TYPE III BARRICADES AND BARRELS/DRUMS. YELLOW PENNANT FLAGGING SHALL BE USED ONLY WHERE PEDESTRIAN ACTIVITY IS TO BE PROHIBITED. THIS MATERIAL SHALL BE USED OR PLACED NEAR VEHICULAR TRAFFIC LANES OR USED TO WARN OR DIRECT VEHICULAR TRAFFIC.
7. THIS TRAFFIC CONTROL DEVICE PLAN INDICATES GENERAL TRAFFIC CONTROL DEVICES TO BE USED ON THIS PROJECT. IT IS ANTICIPATED THAT CONDITIONS WILL VARY DEPENDING ON THE PHASE UNDER CONSTRUCTION AND THAT THE ARRANGEMENT OF THOSE DEVICES WILL BE REVIEWED ON A DAY TO DAY BASIS.
8. ALL EXCAVATION SHALL BE COVERED, BACKFILLED, OR PROTECTED AND FULLY DELINEATED (SEE NOTE 2) AT NIGHT AND WHEN WORK IS NOT IN PROGRESS. EXCAVATION PITS, ETC. SHALL BE FULLY FENCED OR BARRICADED (SEE NOTE 2) TO PREVENT ACCESS BY PEDESTRIANS.
9. ALL TRAFFIC SIGNS SHALL BE STAKED OUT BY THE CONTRACTOR IN ACCORDANCE WITH THE TRAFFIC CONTROL PLAN AND APPROVED BY THE CONTRACTING OFFICER PRIOR TO INSTALLATION.
10. THIS PLAN IS PREPARED FOR GUIDANCE. CONTRACTOR SHALL SUBMIT A TRAFFIC CONTROL DEVICE PLAN TO CITY OF NEW ORLEANS, DEPT. OF PUBLIC WORKS FOR THEIR APPROVAL. THE TRAFFIC CONTROL DEVICE PLAN SHALL BE PREPARED BY PROFESSIONAL ENGINEERS.
11. THE CONTRACTOR SHALL NOTIFY THE FOLLOWING AT LEAST 10 WORKING DAYS PRIOR TO CLOSING THE MIRABEAU AVENUE BRIDGE:

· NEW ORLEANS DEPT. OF PUBLIC WORKS, TRAFFIC ENGINEERING DIVISION	565-6840	(MR. ELMER DARWIN)
· NEW ORLEANS DEPT. OF UTILITIES	243-5521	(MR. DRAYFUS GUIENT)
· LOUISIANA DEPARTMENT OF TRANSPORTATION & DEVELOPMENT	437-3100	(MR. CHRIS MORVANT)
· ORLEANS PARISH SCHOOL BOARD	286-2700	
· NEW ORLEANS POLICE DEPARTMENT	827-3220	
· NEW ORLEANS FIRE DEPARTMENT	565-7845	
· ENTERGY (GAS)	595-3846	(MR. HENRY W. SPANSEL)
· ENTERGY (ELECTRICAL)	595-3461	(MR. NORMAN SILES)
· COX CABLE	734-7345	(MS. MITZI MANCUSO)
· SEWERAGE AND WATER BOARD (UTILITIES)	865-0651	(MR. LARRY MICKAL)
· SEWERAGE AND WATER BOARD (ELECTRICAL FEEDER LINE)	865-0450	(MR. CLAYTON PARRETT)
· U.S. ARMY CORPS OF ENGINEERS	862-1200	(ADMINISTRATIVE CONTRACTING OFFICE)

12. ON DIVIDED STREETS, THE SIGNS CAN BE PLACED ON THE MEDIAN IF VISIBILITY ALLOWS.
13. DETOUR ROUTES MUST BE ADVERTISED IN THE TIMES-PICAYUNE NEWSPAPER A MINIMUM OF ONE (1) WEEK PRIOR TO CLOSURE OF THE BRIDGE.

Safety is a Part of Your Contract

SCALE: 1" = 200'- 0"

200' 0 200' 400' 600' 800' 1000'

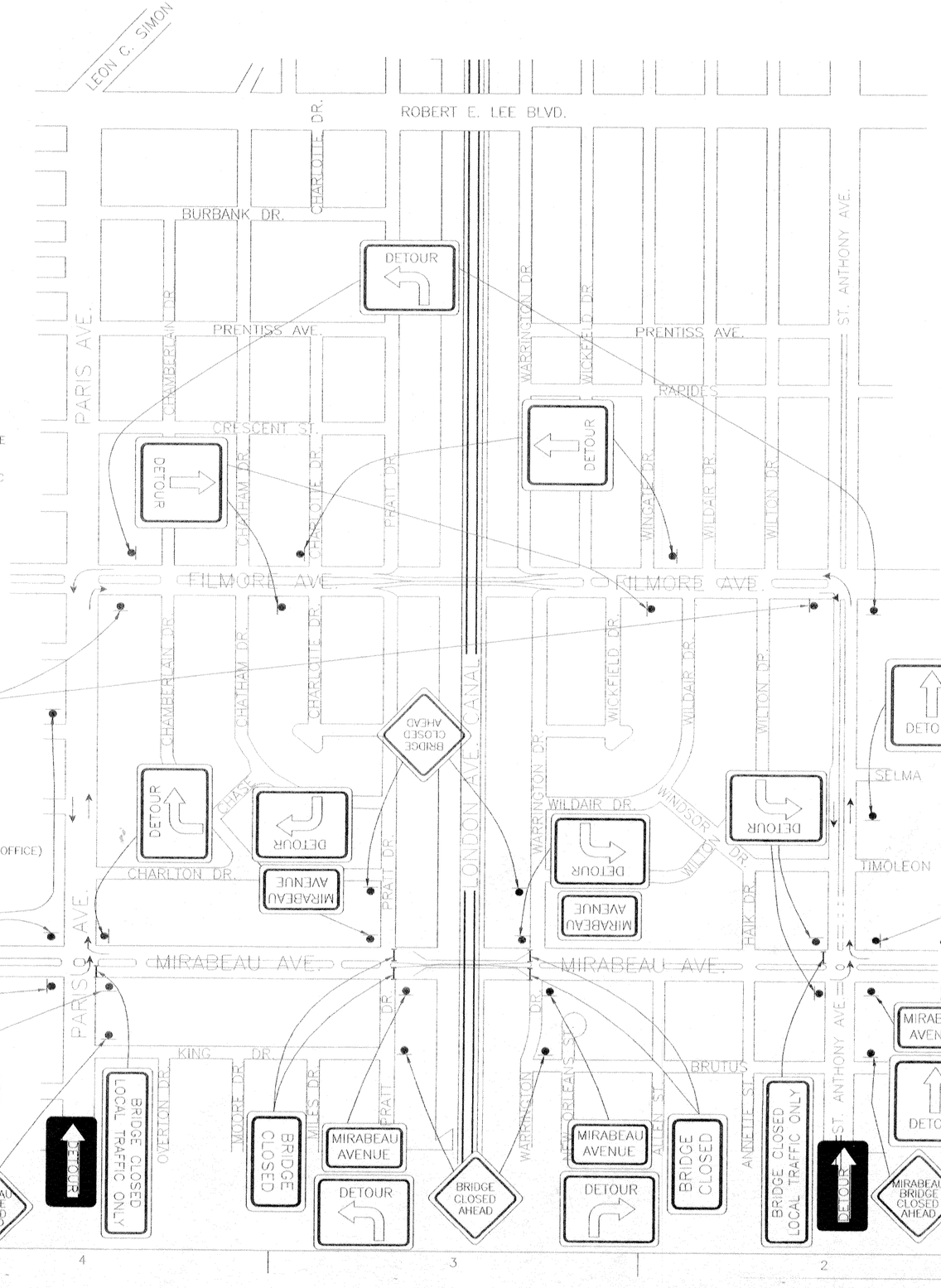

VALUE ENGINEERING INCENTIVE CLAUSES YOUR KEY TO HIGHER PROFITS

SYMBOL	DESCRIPTION	DATE	APPROVED
	REVISIONS		

U.S. ARMY ENGINEER DISTRICT, NEW ORLEANS
CORPS OF ENGINEERS
NEW ORLEANS, LOUISIANA

BOARD OF LEVEE COMMISSIONERS
ORLEANS LEVEE DISTRICT
NEW ORLEANS, LOUISIANA

MEYER ENGINEERS, LTD. METAIRIE, LOUISIANA
LAKE PONTCHARTRAIN, LA. AND VICINITY
HIGH LEVEL PLAN

LONDON AVE. OUTFALL CANAL, PARALLEL PROTECTION FLOODPROOFING OF MIRABEAU AVE. & FILMORE AVE. BRIDGES
ORLEANS PARISH, LOUISIANA

MIRABEAU AVENUE SEALED BRIDGE TRAFFIC CONTROL DEVICE & PLANS & NOTES

DESIGNED BY: JCS	DATE: 3-12-01	PLOT SCALE: 1"=400'	PLOT DATE: 6-27-01
DRAWN BY: MJF			
CHECKED BY: JCS	CADD FILE: 936218		FILE NO. H-4-44674
SUBMITTED BY: MEYER ENGINEERS, LTD. DESIGN ENGINEER	SOLICITATION NO. DACW29-01-B-0092		DWG. 8 OF 97

Safety is a Part of Your Contract

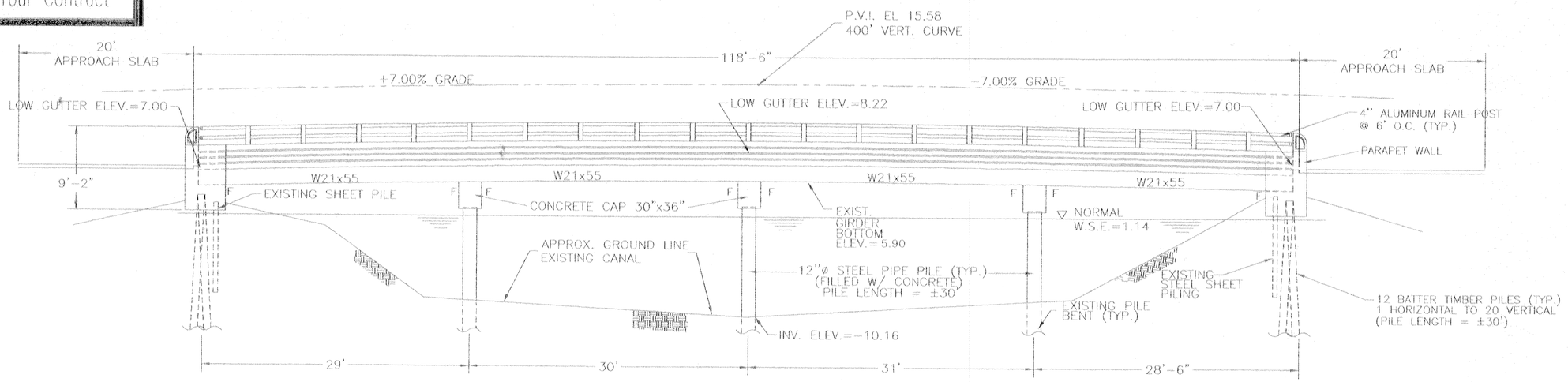

EXISTING BRIDGE ELEVATION - MIRABEAU AVE. BRIDGE
SCALE 1"=5'

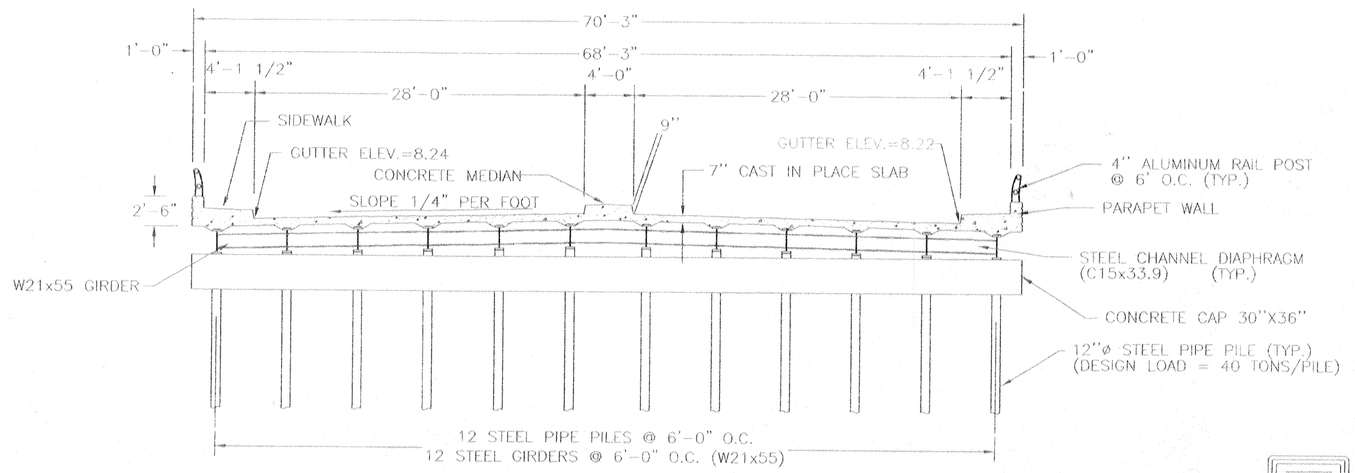

EXISTING BRIDGE SECTION - MIRABEAU AVE. BRIDGE
SCALE 1"=5'

REFERENCE DRAWINGS
FOR GENERAL NOTES, SEE DWG. NO. 4
FOR DEMOLITION PLAN, SEE DWG. NO. 10
FOR UTILITY PLAN, SEE DWGS. NOS. 12-14c

SCALE 1"=5'
5' 0 5' 10' 15' 20'

SYMBOL	DESCRIPTION	DATE	APPROVED
	REVISIONS		

U.S. ARMY ENGINEER DISTRICT, NEW ORLEANS
CORPS OF ENGINEERS
NEW ORLEANS, LOUISIANA

BOARD OF LEVEE COMMISSIONERS
ORLEANS LEVEE DISTRICT
NEW ORLEANS, LOUISIANA

MEYER ENGINEERS, LTD. METAIRIE, LOUISIANA

LAKE PONTCHARTRAIN, LA. AND VICINITY
HIGH LEVEL PLAN
LONDON AVE. OUTFALL CANAL PARALLEL PROTECTION FLOODPROOFING OF MIRABEAU AVE. & FILMORE AVE. BRIDGES
ORLEANS PARISH, LOUISIANA

MIRABEAU AVENUE SEALED BRIDGE EXISTING STRUCTURE

DESIGNED BY: JCS	DATE: 3-12-01	PLOT SCALE: 1"=10'	PLOT DATE: 6-27-01
DRAWN BY: MJF			
CHECKED BY: JCS	CADD FILE: 936289		FILE NO. H-4-44674
SUBMITTED BY: MEYER ENGINEERS, LTD. DESIGN ENGINEER	SOLICITATION NO. DACW29-01-B-0092		DWG. 9 OF 97

PLOT 1=10

VALUE ENGINEERING INCENTIVE CLAUSES YOUR KEY TO HIGHER PROFITS

C-A-D

Safety is a Part of Your Contract

17+00 | 18+00 | 19+00 | 20+00 | 21+00 | 22+00 | 23+00 | 24+00

STA 17+82 BFM B/L BEGIN COLD PLANING ASPHALT PAVEMENT (WESTBOUND ROADWAY)

STA 18+16 BFM B/L BEGIN REMOVAL OF CONCRETE CURBS (WESTBOUND ROADWAY)

STA 19+37 BFM B/L END COLD PLANING ASPHALT PAVEMENT (EASTBOUND ROADWAY) (WESTBOUND ROADWAY)

STA 19+37 BFM B/L BEGIN ASPHALT AND CONC. REMOVAL (EASTBOUND ROADWAY) (WESTBOUND ROADWAY)

STA 19+67 BFM B/L BEGIN CONC. SIDEWALK REMOVAL AND REPLACEMENT (WESTBOUND ROADWAY)

STA 19+77 BFM B/L END CONC. SIDEWALK REMOVAL (WESTBOUND ROADWAY)

STA 19+77 BFM B/L END ASPHALT AND CONC. REMOVAL (EASTBOUND ROADWAY) (WESTBOUND ROADWAY)

STA 19+77 BFM B/L END REMOVAL OF CONCRETE CURBS (WESTBOUND ROADWAY)

STA 19+77 BFM B/L BEGIN CONC. BRIDGE REMOVAL

STA 21+17 BFM B/L END CONC. BRIDGE REMOVAL

STA 21+17 BFM B/L BEGIN REMOVAL OF CONCRETE CURBS (WESTBOUND ROADWAY)

STA 21+17 BFM B/L BEGIN ASPHALT AND CONC. REMOVAL (EASTBOUND ROADWAY) (WESTBOUND ROADWAY)

STA 21+17 BFM B/L BEGIN CONC. SIDEWALK REMOVAL (WESTBOUND ROADWAY)

STA 21+32 BFM B/L END CONC. SIDEWALK REMOVAL (WESTBOUND ROADWAY)

STA 21+57 BFM B/L END ASPHALT AND CONC. REMOVAL (EASTBOUND ROADWAY) (WESTBOUND ROADWAY)

STA 21+57 BFM B/L BEGIN COLD PLANING ASPHALT PAVEMENT (EASTBOUND ROADWAY) (WESTBOUND ROADWAY)

STA 22+55 BFM B/L END REMOVAL OF CONCRETE CURBS (WESTBOUND ROADWAY)

STA 23+27 BFM B/L END COLD PLANING ASPHALT PAVEMENT (EASTBOUND ROADWAY) (WESTBOUND ROADWAY)

71+00
C.O.E. W B/L
STA 70+47.15 C.O.E. W B/L
END FLOODWALL REMOVAL

STA 70+17.65 C.O.E. W B/L
BEGIN FLOODWALL REMOVAL

C.O.E. W B/L
70+00

STA 69+44.95 C.O.E. W B/L
END FLOODWALL REMOVAL

69+00
C.O.E. W B/L

STA 69+05.27 C.O.E. W B/L
BEGIN FLOODWALL REMOVAL

EXISTING FLOODWALL TO REMAIN

REMOVE EXIST. FLOODWALL FROM STA. 70+47.15 W B/L TO BRIDGE

LONDON AVE. OUTFALL CANAL

REMOVE EXIST. PILE BENTS (TYP.)

REMOVE EXIST. 12" WATERMAIN CROSSING

REMOVE EXIST. FLOODWALL FROM STA. 70+25.91 E B/L TO BRIDGE

EXISTING FLOODWALL TO REMAIN

6" G
12" W

WESTBOUND ROADWAY

COLD PLANING ASPHALT PAVEMENT

REMOVE ASPHALT

REMOVE EXISTING CONCRETE BRIDGE

MIRABEAU AVENUE BRIDGE (CONC.)

EASTBOUND ROADWAY

MIRABEAU AVENUE (ASPHALT)

10" G

REMOVE STEEL POSTS W/ CABLE GATE (TYP.)

REMOVE EXIST. FLOODWALL FROM STA. 69+05.27 W B/L TO BRIDGE

REMOVE EXIST. FLOODWALL FROM STA. 68+72.77 E B/L TO BRIDGE

BFM BASELINE "B"

71+00
C.O.E. E B/L

STA 70+25.91 C.O.E. E B/L
END FLOODWALL REMOVAL

C.O.E. E B/L
70+00

STA 69+86.56 C.O.E. E B/L
BEGIN FLOODWALL REMOVAL

STA 69+14.21 C.O.E. E B/L
END FLOODWALL REMOVAL

69+00
C.O.E. E B/L

STA 68+72.77 C.O.E. E B/L
BEGIN FLOODWALL REMOVAL

24+00

LEGEND
- CONCRETE BRIDGE REMOVAL
- ASPHALT REMOVAL
- COLD PLANING ASPHALT PAVEMENT
- SIDEWALK REMOVAL
- FLOODWALL REMOVAL

PLAN
SCALE 1"=20'
20' 0 20' 40' 60' 80'

C.O.E. W B/L

C.O.E. E B/L

DEMOLITION REQUIREMENTS

1. SEE DWG. NO. 4 FOR SEQUENCE OF BRIDGE CONSTRUCTION.
2. SEE UTILITY RELOCATION PLAN FOR DISPOSITION OF EXISTING UTILITIES.
3. REMOVE EXISTING BRIDGE SUPERSTRUCTURE AND SUBSTRUCTURE. PULL EXISTING BRIDGE PILING.
4. SAWCUT AND REMOVE EXISTING CURBS AND SIDEWALKS WITHIN THE LIMITS SHOWN ON THIS SHEET.
5. REMOVE "I"-WALLS AT ALL CORNERS OF EXISTING BRIDGE AS SHOWN ON PLANS. SEE FLOODWALL DETAILS FOR TIE-IN INFORMATION.
6. REMOVE EXISTING ASPHALT PAVEMENTS WITHIN LIMITS SHOWN.
7. REMOVE EXISTING SHEET PILING UNDERNEATH BRIDGE ABUTMENTS.
8. BRIDGE SUPERSTRUCTURE AND SUBSTRUCTURE, BRIDGE PILING ROADWAY, CONCRETE WALL AND SHEET PILING DEMOLISHED AS A PART OF THIS PROJECT SHALL BECOME THE PROPERTY OF THE CONTRACTOR AND BE REMOVED FROM THE SITE.
9. THE SHEET PILE UNDER EXIST. FLOODWALL SHALL BE REMOVED IF IT CONFLICTS WITH NEW WORK. OTHERWISE CUT OFF THE SHEET PILE 3' BELOW GROUND ELEVATION.
10. THE TIMBER PILE BENTS FOR THE 6" & 10" GAS LINES SHALL BE REMOVED AFTER THE GAS LINES HAVE BEEN REMOVED.

REFERENCE DRAWINGS
FOR GENERAL NOTES, SEE DWG. NO. 4
FOR PLAN/PROFILE, SEE DWG. NO. 7
FOR EXISTING BRIDGE, SEE DWG. NO. 9
FOR DISPOSITION OF UTILITIES, SEE DWG. NOS. 12 - 14c
FOR TYPICAL ROADWAY SECTIONS, SEE DWG. NO. 41
FOR I-WALL DETAILS, SEE DWG. NO. 25a

VALUE ENGINEERING INCENTIVE CLAUSES — YOUR KEY TO HIGHER PROFITS

C•A•D

SYMBOL	DESCRIPTION	DATE	APPROVED
	REVISIONS		

U.S. ARMY ENGINEER DISTRICT, NEW ORLEANS
CORPS OF ENGINEERS
NEW ORLEANS, LOUISIANA

BOARD OF LEVEE COMMISSIONERS
ORLEANS LEVEE DISTRICT
NEW ORLEANS, LOUISIANA

MEYER ENGINEERS, LTD. METAIRIE, LOUISIANA

LAKE PONTCHARTRAIN, LA. AND VICINITY
HIGH LEVEL PLAN

LONDON AVE. OUTFALL CANAL, PARALLEL PROTECTION FLOODPROOFING OF MIRABEAU AVE. & FILMORE AVE. BRIDGES
ORLEANS PARISH, LOUISIANA

MIRABEAU AVENUE SEALED BRIDGE DEMOLITION PLAN

DESIGNED BY: JCS	DATE: 3-12-01	PLOT SCALE: 1"=20'	PLOT DATE: 6-27-01
DRAWN BY: MCM			
CHECKED BY: JCS	CADD FILE: 9362B10		FILE NO. H-4-44674
SUBMITTED BY: MEYER ENGINEERS, LTD. DESIGN ENGINEER	SOLICITATION NO. DACW29-01-B-0092		DWG. 10 OF 97

Safety is a Part of Your Contract

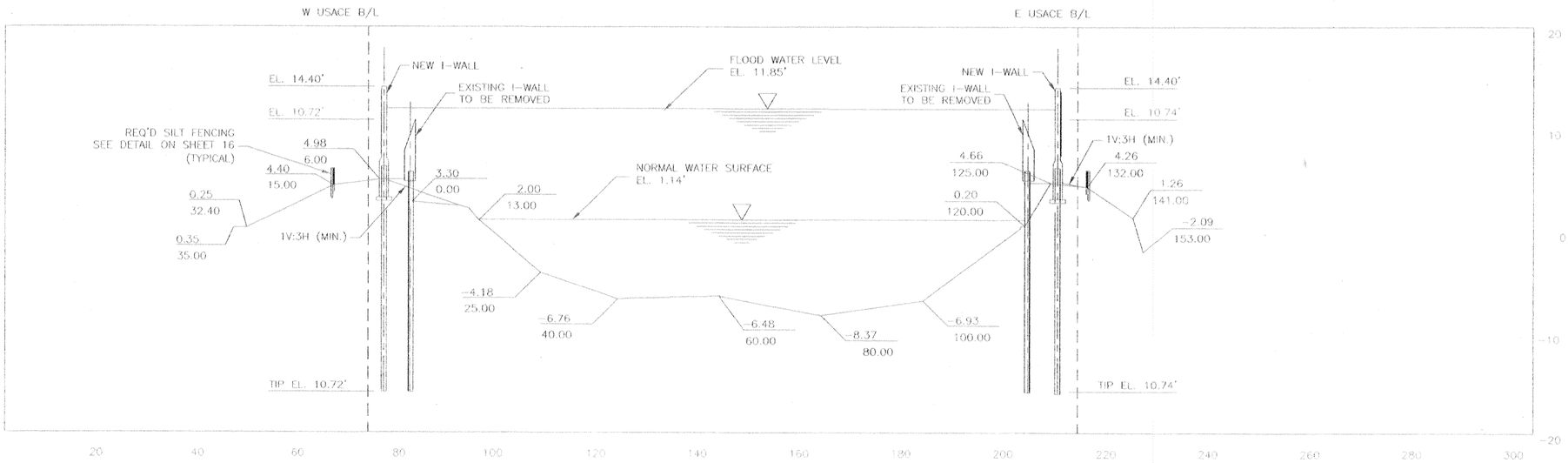

STA 69+25.92 W B/L=
STA 68+94.75 E B/L

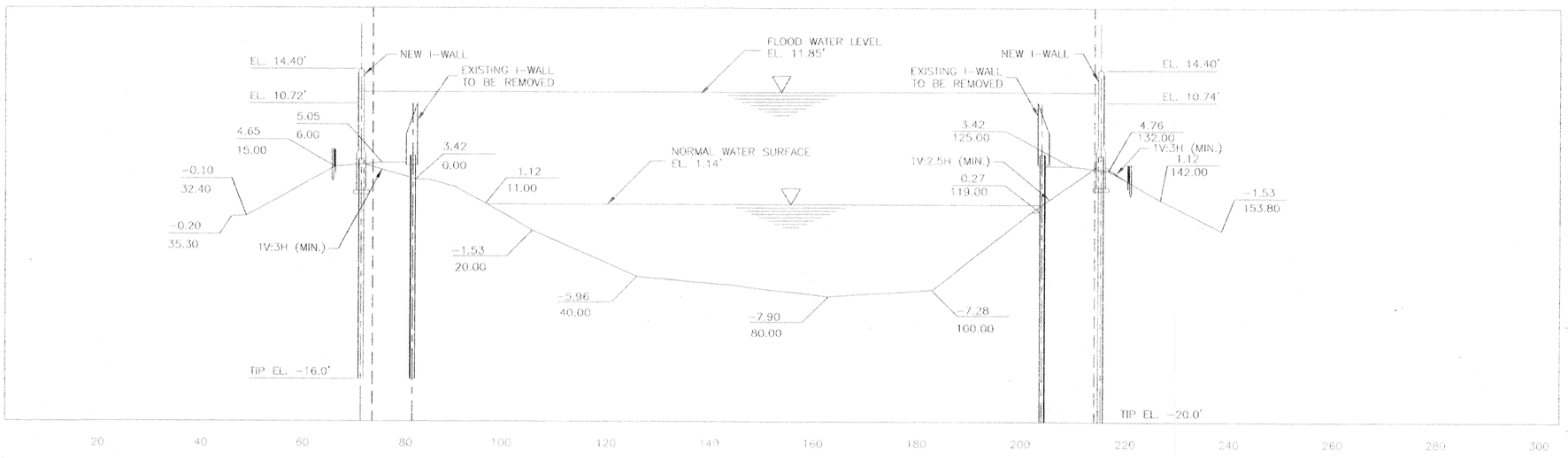

STA 69+45.92 W B/L=
STA 69+14.75 E B/L

SCALE: VERT. 1" = 10'

10' 0 10' 20' 30' 40' 50'

SCALE: HORIZ. 1" = 20'

20' 0 20' 40' 60' 80' 100'

VALUE ENGINEERING
INCENTIVE CLAUSES
YOUR KEY TO HIGHER PROFITS

REFERENCE DRAWINGS

FOR GENERAL NOTES, SEE DWG. NO. 4
FOR FLOODWALL PLAN, SEE DWG. NO. 18a
FOR BRIDGE AND CANAL SECTIONS, SEE DWG. NO. 18b

SYMBOL	DESCRIPTION	DATE	APPROVED
	REVISIONS		

U.S. ARMY ENGINEER DISTRICT, NEW ORLEANS
CORPS OF ENGINEERS
NEW ORLEANS, LOUISIANA

BOARD OF LEVEE COMMISSIONERS
ORLEANS LEVEE DISTRICT
NEW ORLEANS, LOUISIANA

MEYER ENGINEERS, LTD. METAIRIE, LOUISIANA

LAKE PONTCHARTRAIN, LA. AND VICINITY
HIGH LEVEL PLAN

LONDON AVE. OUTFALL CANAL, PARALLEL PROTECTION FLOODPROOFING OF
MIRABEAU AVE. & FILMORE AVE. BRIDGES
ORLEANS PARISH, LOUISIANA

MIRABEAU AVENUE SEALED BRIDGE
EXISTING LONDON AVE. CANAL – SECTIONS

DESIGNED BY: JCS	DATE: 3-12-01	PLOT SCALE: 1"=20'	PLOT DATE: 6-27-01
DRAWN BY: MJF			
CHECKED BY: JCS	CADD FILE: 5362811a		FILE NO: H-4-44674
SUBMITTED BY: MEYER ENGINEERS, LTD. DESIGN ENGINEER	SOLICITATION NO. DACW29-01-B-0092		DWG. 11a OF 97

Safety is a Part of Your Contract

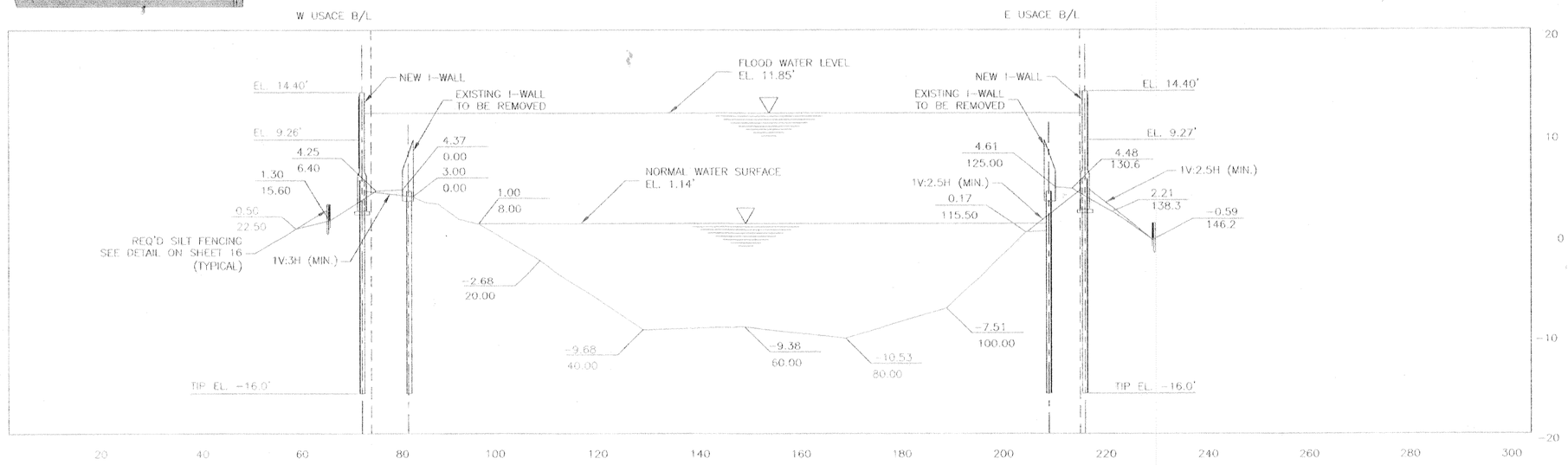

STA 70+16.59 W B/L=
STA 69+85.42 E B/L

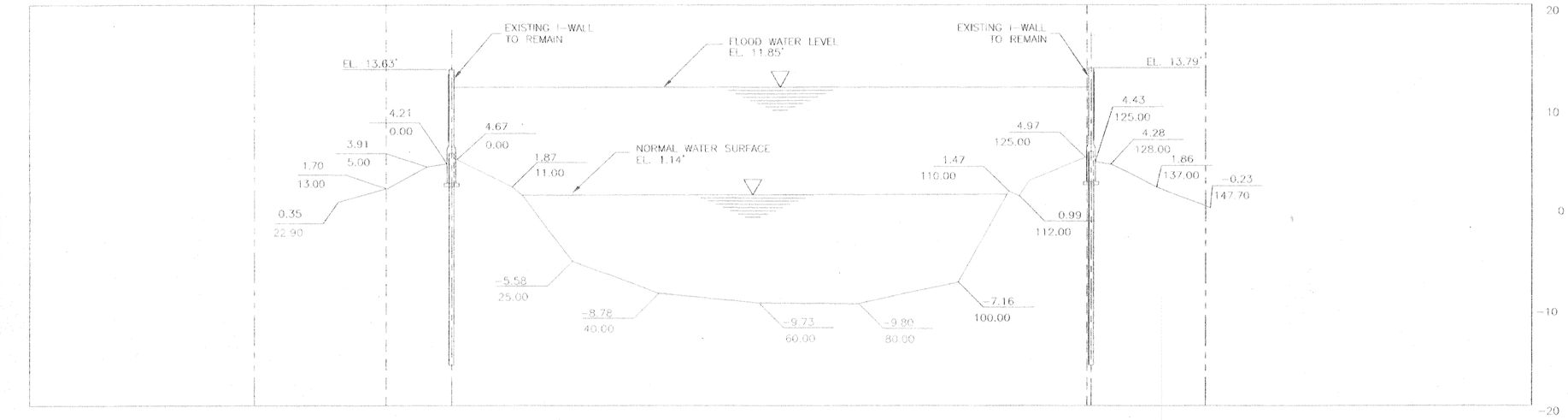

STA 70+61.59 W B/L=
STA 70+30.42 E B/L

SCALE: VERT. 1" = 10'

10' 0 10' 20' 30' 40' 50'

SCALE: HORIZ. 1" = 20'

20' 0 20' 40' 60' 80' 100'

VALUE ENGINEERING — INCENTIVE CLAUSES — YOUR KEY TO HIGHER PROFITS

REFERENCE DRAWINGS

FOR GENERAL NOTES, SEE DWG. NO. 4
FOR FLOODWALL PLAN, SEE DWG. NO. 18a
FOR BRIDGE AND CANAL SECTIONS, SEE DWG. NO. 18b

SYMBOL	DESCRIPTION	DATE	APPROVED
	REVISIONS		

U.S. ARMY ENGINEER DISTRICT, NEW ORLEANS
CORPS OF ENGINEERS
NEW ORLEANS, LOUISIANA

BOARD OF LEVEE COMMISSIONERS
ORLEANS LEVEE DISTRICT
NEW ORLEANS, LOUISIANA

MEYER ENGINEERS, LTD. METAIRIE, LOUISIANA
LAKE PONTCHARTRAIN, LA. AND VICINITY
HIGH LEVEL PLAN

LONDON AVE. OUTFALL CANAL, PARALLEL PROTECTION FLOODPROOFING OF MIRABEAU AVE. & FILMORE AVE. BRIDGES
ORLEANS PARISH, LOUISIANA

MIRABEAU AVENUE SEALED BRIDGE
EXISTING LONDON AVE. CANAL – SECTIONS

DESIGNED BY: JCS	DATE: 3-12-01	PLOT SCALE: 1"=20'	PLOT DATE: 6-27-01
DRAWN BY: MJF			
CHECKED BY: JCS	CADD FILE: 9362b11b		FILE NO. H-4-44674
SUBMITTED BY: MEYER ENGINEERS, LTD. DESIGN ENGINEER	SOLICITATION NO. DACW29-01-B-0092		DWG. 11b OF 97

Safety is a Part of Your Contract

18+00 19+00 20+00 21+00 22+00 23+00

N

NOPSI

MIRABEAU AVENUE BRIDGE (CONC.)

MIRABEAU AVENUE (ASPHALT)

WESTBOUND ROADWAY

EASTBOUND ROADWAY

BFM B/L "B"

EXISTING CABLE SPLICE

PI STA 69+15.97
C.O.E. E B/L (LCE-10)

PI STA 69+40.25
C.O.E. W B/L
(LCW-9)

C.O.E. W B/L

C.O.E. E B/L

E-1 PP-4 CB-4 WM-1 D-3 E-2 WM-2 G-1 W-1 PP-1 E-3 CX-1 G-5 PP-2 E-4 WM-4 WM-5 PP-6 E-13 E-11 E-12 A-1 CB-8 CB-9 D-3 W-3 W-2 CB-7 CB-6 D-4 CB-5 A-2 A-3 PP-5 G-6 SG-3 SG-1 LT-4 E-8 SL-1 E-7 LT-1 E-10 E-9 LT-2 G-4 E-6 LT-3 E-5 G-2 LT-1 D-1 D-2 PP-3 CB-2 CB-1 CB-10 WM-3 G-8 CB-3 SG-2 G-3 G-7

PLAN

SCALE: 1" = 15'

15' 0 15' 30' 45' 60'

NOTE:
EXISTING UTILITY LOCATIONS BASED ON FIELD SURVEY AND INFORMATION FROM UTILITY AGENCIES. CONTRACTOR SHALL ARRANGE FOR OWNER TO MARK UTILITY LOCATIONS IN FIELD PRIOR TO CONSTRUCTION.

LEGEND

G-7 EXISTING UTILITIES

G-7 RELOCATED UTILITIES

REFERENCE DRAWINGS
FOR GENERAL NOTES, SEE DWG. NO. 4
FOR PLAN/PROFILE, SEE DWG. NO. 7
FOR REQUIRED UTILITY RELOCATION/MODIFICATION CHART AND DESCRIPTION OF UTILITIES, SEE DWGS. NOS. 13

DESIGN WATER ELEV = 11.85

TOP OF PARAPET WALL ELEV = 13.90

TOP OF FLOODWALL ELEV = 14.40

SIDEWALK

12" APPROACH SLAB

NORMAL W.S.E.=1.14

20' 20' 30' 30' 20' 20'

STRUCTURE ELEVATION

SCALE: 1" = 15'

15' 0 15' 30' 45' 60'

UTILITIES RELOCATION NOTES

1. THE CONTRACTOR SHALL FURNISH ALL LABOR, MATERIAL, EQUIPMENT AND TOOLS AND PERFORM ALL OPERATIONS IN CONNECTION WITH THE RELOCATION OF THE 12"Ø WATER LINE IN ACCORDANCE WITH THESE DRAWINGS AND SPECIFICATIONS SECTION 02666.

VALUE ENGINEERING INCENTIVE CLAUSES — YOUR KEY TO HIGHER PROFITS

C•A•D

SYMBOL	DESCRIPTION	DATE	APPROVED
	REVISIONS		

U.S. ARMY ENGINEER DISTRICT, NEW ORLEANS
CORPS OF ENGINEERS
NEW ORLEANS, LOUISIANA

BOARD OF LEVEE COMMISSIONERS
ORLEANS LEVEE DISTRICT
NEW ORLEANS, LOUISIANA

MEYER ENGINEERS, LTD. METAIRIE, LOUISIANA

LAKE PONTCHARTRAIN, LA. AND VICINITY
HIGH LEVEL PLAN

LONDON AVE. OUTFALL CANAL, PARALLEL PROTECTION FLOODPROOFING OF MIRABEAU AVE. & FILMORE AVE. BRIDGES
ORLEANS PARISH, LOUISIANA

MIRABEAU AVENUE SEALED BRIDGE UTILITY PLAN

DESIGNED BY: JCS	DATE: 3-12-01	PLOT SCALE: 1"=15'	PLOT DATE: 6-27-01
DRAWN BY: MJF			
CHECKED BY: JCS	CADD FILE: 9262b12		FILE NO. H-4-44674
SUBMITTED BY: MEYER ENGINEERS, LTD. DESIGN ENGINEER	SOLICITATION NO. DACW29-01-B-0092		DWG. 12 OF 97

REQUIRED UTILITY RELOCATION/MODIFICATION

ITEM NO.	DESCRIPTION	LOCATION/B/L STATION	OWNER	DISPOSITION
A-1 A-2 A-3	GUY ANCHORS	STA. 18+00.43 BFM B/L, 3.40 LT. STA. 18+04.53 BFM B/L, 3.40 LT. STA. 18+57.40 BFM B/L, 20.34 LT.	ENTERGY ELEC. OPERATIONS	TO REMAIN, DO NOT DISTURB.
CB-1 CB-2 CB-3 CB-4 CB-5 CB-6 CB-7 CB-8 CB-9 CB-10	CATCH BASINS	STA. 18+00.43 BFM B/L, 3.40 RT. STA. 18+04.53 BFM B/L, 3.40 RT. STA. 18+57.40 BFM B/L, 20.34 RT. STA. 18+00.43 BFM B/L, 94.86 LT. STA. 23+10.00 BFM B/L, 21.00 RT. STA. 23+18.00 BFM B/L, 3.00 RT. STA. 23+24.00 BFM B/L, 3.00 RT. STA. 23+19.00 BFM B/L, 69.00 LT. STA. 23+25.00 BFM B/L, 69.00 LT. STA. 17+73.00 BFM B/L, 56.00 RT.	NEW ORLEANS DPW	TO REMAIN, DO NOT DISTURB.
CX-1	OVERHEAD CABLE LINE	ALONG MIRABEAU AVENUE W.B. SIDEWALK	COX CABLE	TO BE REMOVED (BY COX CABLE)
D-1	12" DRAIN LINE	ALONG MIRABEAU AVENUE E.B. SIDEWALK SIDE AND CROSSING PRATT DRIVE	NEW ORLEANS DPW	TO REMAIN, DO NOT DISTURB.
D-2	12" DRAIN LINE	ALONG MIRABEAU AVENUE W.B. SIDEWALK SIDE AND CROSSING PRATT DRIVE	NEW ORLEANS DPW	TO REMAIN, DO NOT DISTURB.
D-3	15" DRAIN LINE	ALONG MIRABEAU AVENUE W.B. SIDEWALK SIDE AND CROSSING PRATT DRIVE	NEW ORLEANS DPW	TO REMAIN, DO NOT DISTURB.
D-4	DRAIN LINES - 10" 12" AND 15" DIA	ALONG MIRABEAU AVENUE E.B. SIDEWALK SIDE AND CROSSING PRATT DRIVE	NEW ORLEANS DPW	TO REMAIN, DO NOT DISTURB.
E-1	ELECTRICAL BOX	STA. 17+72.00 BFM B/L, 98.00 LT.	ENTERGY	TO REMAIN, DO NOT DISTURB.
E-2	OVERHEAD ELECTRICAL LINE	ALONG MIRABEAU AVENUE WB SIDEWALK SIDE	ENTERGY GAS OPERATIONS	TO REMAIN, DO NOT DISTURB.
E-3	OVERHEAD ELECTRICAL LINE	ALONG MIRABEAU AVENUE W.B. CROSSING LONDON AVE. CANAL	ENTERGY ELEC. OPERATIONS	TO BE DE-ENERGIZED DURING CONSTRUCTION AND RE-ENERGIZED UPON COMPLETION OF CONSTRUCTION (BY ENTERGY)
E-4	OVERHEAD ELECTRICAL LINE	ALONG MIRABEAU AVENUE W.B. SIDEWALK SIDE	ENTERGY ELEC. OPERATIONS	TO REMAIN, DO NOT DISTURB.
E-5	UNDERGROUND ELECTRICAL LINE	ALONG MIRABEAU AVENUE IN MEDIAN	ENTERGY (STREET LIGHT)	TO REMAIN, DO NOT DISTURB.
E-6 E-7	UNDERGROUND ELECTRICAL LINE	ALONG MIRABEAU AVENUE IN MEDIAN	ENTERGY (STREET LIGHT)	CONTRACTOR SHALL REMOVE DURING CONSTRUCTION AND INSTALL A 2" PVC CONDUIT IN MEDIAN FOR CABLE FOR STREET LIGHTS. CONTRACTOR SHALL COORDINATE THE LOCATION OF THE 2" PVC CONDUIT, HAND HOLE, JUNCTION BOX ETC. WITH ENTERGY (STREET LIGHT) AND NEW ORLEANS DEPT. OF PUBLIC UTILITIES. WIRING, STREET LIGHT, JUNCTION BOX & HAND HOLE WILL BE INSTALLED BY ENTERGY (STREET LIGHT).
E-8	UNDERGROUND ELECTRICAL LINE	ALONG MIRABEAU AVENUE IN MEDIAN	ENTERGY ELEC. OPERATIONS	TO REMAIN, DO NOT DISTURB.
E-9	S&WB PRIMARY ELECTRIC FEEDER CABLE - 340	ALONG LONDON AVENUE CANAL - EAST SIDE OF CANAL ALONG FLOODWALLS	S&WB	CONTRACTOR SHALL MOVE THE ELECT. FEEDER CABLE WITH PRECAUTION DURING CONSTRUCTION. COORDINATE WITH S&WB FOR DEENERGIZING/ REENERGIZING OF THE EXIST. FEEDER CABLES. CONTRACTOR SHALL ATTACH EXIST. CABLE TO NEW "I" WALL UPON COMPLETION.
E-10	S&WB PRIMARY ELECTRIC FEEDER CABLE - 400	ALONG LONDON AVENUE CANAL - WEST SIDE OF CANAL ALONG FLOODWALLS	S&WB	CONTRACTOR SHALL TEMPORARILY RELOCATE A NEW FEEDER CABLE. COORDINATE WITH S&WB FOR DEENERGIZING/ REENERGIZING OF THE CABLES. CONTRACTOR SHALL ATTACH A NEW PERMANENT FEEDER CABLE TO NEW "I" WALL UPON COMPLETION.
E-11	S&WB PRIMARY ELECTRIC FEEDER CABLE - 432	ALONG LONDON AVENUE CANAL - EAST SIDE OF CANAL ALONG LEVEE TOE	S&WB	TO REMAIN, DO NOT DISTURB. CONTRACTOR SHALL COORDINATE WITH S&WB FOR DEENERGIZING/REENERGIZING OF THE CABLES.
E-12 E-13	UNDERGROUND ELECTRICAL LINE	CROSSING MIRABEAU AVE. W.B. LANES	ENTERGY (STREET LIGHT)	CONTRACTOR SHALL REMOVE DURING CONSTRUCTION. CONTRACTOR SHALL INSTALL 2" PVC CONDUIT FOR CABLE INSTALLATION. CONTRACTOR SHALL COORDINATE THE LOCATION OF 2" PVC PIPE WITH ENTERGY. WIRING WILL BE INSTALLED BY ENTERGY (STREET LIGHT) CONTRACTOR SHALL COORDINATE THIS WORK WITH ENTERGY (STREET LIGHT)
G-1	6" U.P. GAS LINE	ALONG MIRABEAU AVENUE W.B. SIDEWALK SIDE AND CROSSING PRATT DRIVE	ENTERGY GAS OPERATIONS	TO REMAIN, DO NOT DISTURB.
G-2	6" U.P. GAS LINE	CROSSING MIRABEAU AVENUE AT STA. 19+62.45 BFM B/L	ENTERGY GAS OPERATIONS	TO REMAIN, DO NOT DISTURB.
G-3	6" U.P. GAS LINE	CROSSING LONDON CANAL SOUTH OF EXISTING BRIDGE ATTACHED TO PILE SUPPORTS	ENTERGY GAS OPERATIONS	TO BE RELOCATED BY ENTERGY GAS OPERATIONS CONTRACTOR SHALL REMOVE THE PILE BENTS.
G-4	6" U.P. GAS LINE	CROSSING MIRABEAU AVENUE AT STA. 21+38.92 BFM B/L	ENTERGY GAS OPERATIONS	TO REMAIN, DO NOT DISTURB.
G-5	6" U.P. GAS LINE	ALONG MIRABEAU AVENUE W.B. SIDEWALK SIDE - EAST OF BRIDGE	ENTERGY GAS OPERATIONS	TO REMAIN, DO NOT DISTURB.
G-6	10" H.P. GAS LINE	ALONG MIRABEAU AVENUE E.B. SIDEWALK SIDE - EAST OF BRIDGE	ENTERGY GAS OPERATIONS	TO REMAIN, DO NOT DISTURB.

REQUIRED UTILITY RELOCATION/MODIFICATION

ITEM NO.	DESCRIPTION	LOCATION/B/L STATION	OWNER	DISPOSITION
G-7	10" H.P. GAS LINE	CROSSING LONDON CANAL SOUTH OF EXISTING BRIDGE ATTACHED TO PILE SUPPORTS ALONG MIRABEAU AVENUE E.B.	ENTERGY GAS OPERATIONS	TO BE RELOCATED BY ENTERGY GAS OPERATIONS CONTRACTOR SHALL REMOVE THE PILE BENTS.
G-8	10" H.P. GAS LINE	ALONG MIRABEAU AVENUE E.B. SIDEWALK SIDE - WEST OF BRIDGE	ENTERGY GAS OPERATIONS	TO REMAIN, DO NOT DISTURB.
LT-1 LT-2	LIGHT POLE LIGHT POLE	STA. 19+72.00 BFM B/L 33.00 LT. STA. 21+13.00 BFM B/L 33.00 LT.	NEW ORLEANS UTILITIES DEPT.	TO BE REMOVED DURING CONSTRUCTION AND INSTALLED BACK UPON COMPLETION OF CONSTRUCTION. (BY ENTERGY STREET LIGHTS & NEW ORLEANS DEPT. OF UTILITIES) TEMPORARY FLOOD LIGHTS SHALL BE INSTALLED DURING CONSTRUCTION BY ENTERGY (STREET LIGHT) AND NEW ORLEANS DEPT. OF PUBLIC UTILITIES. CONTRACTOR SHALL COORDINATE THIS WORK WITH ENTERGY. (STREET LIGHT)
LT-3 LT-4	LIGHT POLE LIGHT POLE	STA. 22+52.00 BFM B/L 33.27 LT. STA. 18+55.00 BFM B/L 33.00 LT.	NEW ORLEANS UTILITIES DEPT.	TO REMAIN, DO NOT DISTURB
PP-1	POWER POLE	STA. 19+45.00 BFM B/L 84.20 LT.	ENTERGY ELEC. OPERATIONS	TO REMAIN, DO NOT DISTURB.
PP-2	POWER POLE	STA. 21+63.00 BFM B/L 85.40 LT.	ENTERGY ELEC. OPERATIONS	TO REMAIN, DO NOT DISTURB.
PP-3 PP-4 PP-5 PP-6	POWER POLE	STA. 17+73.00 BFM B/L 23.00 RT. STA. 17+71.00 BFM B/L 90.00 LT. STA. 23+42.00 BFM B/L 24.00 RT. STA. 23+48.00 BFM B/L 90.00 LT.	ENTERGY ELEC. OPERATIONS	TO REMAIN, DO NOT DISTURB.
SG-1	STREET SIGN	STA. 18+17.00 BFM B/L 33.00 LT.	NEW ORLEANS DPW	TO BE REMOVED AND REPLACED WITH NEW SIGN
SG-2	STREET SIGN	STA. 19+42.00 BFM B/L 00.00 LT.	NEW ORLEANS DPW	REMOVE AND STORE DURING CONSTRUCTION, REINSTALL DURING FINAL SIGNING AND STRIPING
SG-3	STREET SIGN	STA. 17+78.00 BFM B/L 37.00 LT.	NEW ORLEANS DPW	TO REMAIN, DO NOT DISTURB.
SL-1	FLASHING SCHOOL LIGHT	STA. 18+66.00 BFM B/L 34.00 LT.	NEW ORLEANS UTILITIES DEPT.	TO REMAIN, DO NOT DISTURB.
W-1	12" WATER LINE	CROSSING LONDON CANAL NORTH OF EXISTING BRIDGE ATTACHED TO PILE SUPPORTS ALONG MIRABEAU AVENUE W.B.	S&WB	THE LINE SHALL BE SHUT OFF DURING CONSTRUCTION. COORDINATE WITH S&WB. CONTRACTOR SHALL REMOVE THE EXISTING WATERLINE AND REPLACE ON SUPPORTS ALONG THE SIDE OF THE BRIDGE.
W-2	6" WATER LINE	CROSSING MIRABEAU AVENUE AT WARRINGTON ROAD EAST OF BRIDGE	S&WB	TO REMAIN, DO NOT DISTURB.
W-3	12" WATER LINE	ALONG MIRABEAU AVENUE IN MEDIAN EAST OF BRIDGE	S&WB	TO REMAIN, DO NOT DISTURB.
WM-1 WM-2 WM-3 WM-4 WM-5	WATER MANHOLE	STA. 17+82.80 BFM B/L 82.30 LT. STA. 18+88.00 BFM B/L 84.00 LT. STA. 18+34.00 BFM B/L 25.40 RT. STA. 22+84.00 BFM B/L 91.00 LT. STA. 23+26.00 BFM B/L 82.00 LT.	S&WB	VALVES TO BE SHUT OFF DURING WATER LINE RELOCATION. MANHOLES TO REMAIN.

Safety is a Part of Your Contract

AGENCY CONTACT POINTS

· NEW ORLEANS DEPT. OF PUBLIC WORKS, TRAFFIC ENGINEERING DIVISION	565-6840	(MR. ELMER DARWIN)
· NEW ORLEANS DEPT. OF UTILITIES	243-5521	(MR. DRAYFUS GUIENT)
· LOUISIANA DEPARTMENT OF TRANSPORTATION & DEVELOPMENT	437-3100	(MR. CHRIS MORVANT)
· ENTERGY (GAS)	595-3846	(MR. HENRY W. SPANSEL)
· ENTERGY (ELECTRICAL)	595-3460	(MR. NORMAN SILES)
· ENTERGY (STREET LIGHT)	595-3825	(MR. LARRY STYRUM)
· COX CABLE	734-7345	(MS. MITZI MANCUSO)
· SEWERAGE AND WATER BOARD (UTILITIES)	865-0651	(MR. LARRY MICKAL)
· SEWERAGE AND WATER BOARD (ELECTRICAL FEEDER LINE)	865-0450	(MR. CLAYTON PARRETT)
· U.S. ARMY CORPS OF ENGINEERS	862-1200	(ADMINISTRATIVE CONTRACTING OFFICE)

REFERENCE DRAWINGS
1. FOR GENERAL NOTES, SEE DWG. NO. 4.
2. FOR UTILITY PLAN, SEE DWG. NO. 12.

SYMBOL	DESCRIPTION	DATE	APPROVED
	REVISIONS		

U.S. ARMY ENGINEER DISTRICT, NEW ORLEANS
CORPS OF ENGINEERS
NEW ORLEANS, LOUISIANA

BOARD OF LEVEE COMMISSIONERS
ORLEANS LEVEE DISTRICT
NEW ORLEANS, LOUISIANA

MEYER ENGINEERS, LTD. METAIRIE, LOUISIANA

LAKE PONTCHARTRAIN, LA. AND VICINITY
HIGH LEVEL PLAN
LONDON AVE. OUTFALL CANAL, PARALLEL PROTECTION FLOODPROOFING OF MIRABEAU AVE. & FILMORE AVE. BRIDGE
ORLEANS PARISH, LOUISIANA

MIRABEAU AVENUE SEALED BRIDGE UTILITY RELOCATIONS

DESIGNED BY: JCS DRAWN BY: MJF CHECKED BY: JCS	DATE: 3-12-01	PLOT SCALE: 1"=2'	PLOT DATE: 6-27-01
	CADD FILE: 926013		FILE NO. H-4-44674
SUBMITTED BY: MEYER ENGINEERS, LTD. DESIGN ENGINEER	SOLICITATION NO. DACW29-01-B-0032		DWG. 13 OF 97

VALUE ENGINEERING INCENTIVE CLAUSES IN YOUR KEY TO HIGHER PROFITS

C+A+D

Safety is a Part of Your Contract

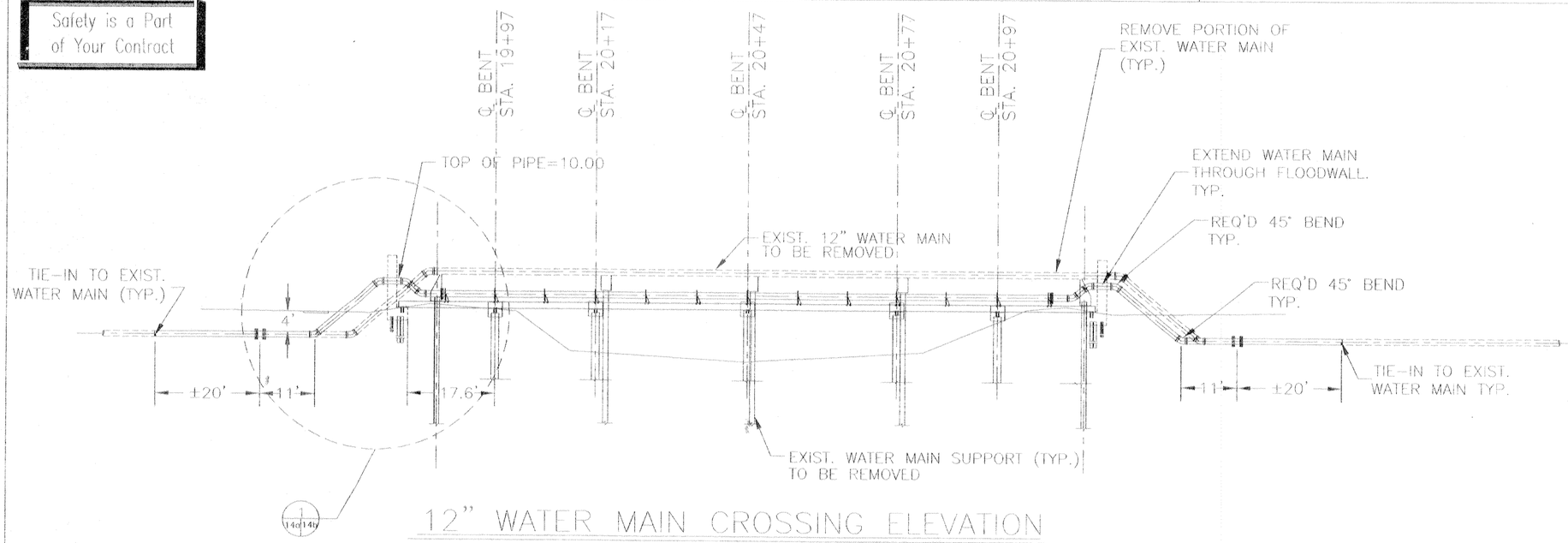

12" WATER MAIN CROSSING ELEVATION

SCALE: 1" = 10'
(LOOKING NORTH)

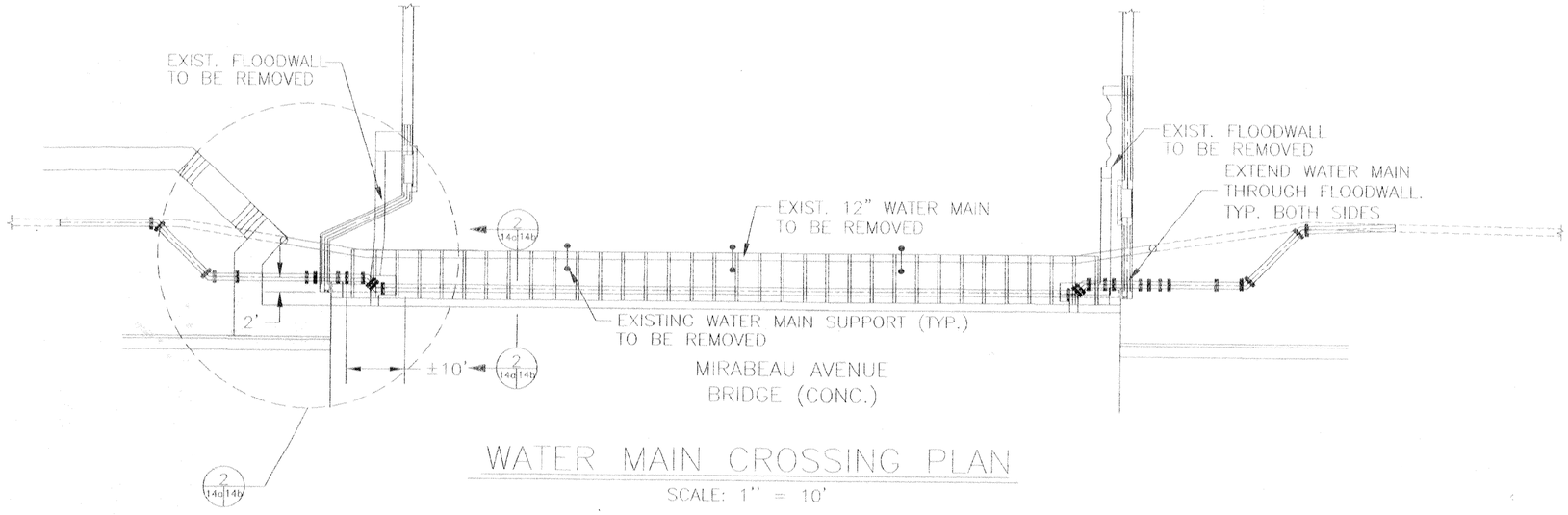

WATER MAIN CROSSING PLAN

SCALE: 1" = 10'

NOTE:

EXISTING UTILITY LOACTIONS BASED ON FIELD SURVEY AND INFORMATION FROM UTILITY AGENCIES. CONTRACTOR SHALL ARRANGE FOR OWNER TO WORK UTILITY IN FIELD PRIOR TO CONSTRUCTION.

REFEENCE DRAWINGS:

FOR GENERAL NOTES, SEE DWG. NO. 4
FOR PLAN/PROFILE, SEE DWG. NO. 7
FOR UTILITY RELOCATION PLANS, SEE DWGS. NOS. 12-14c

UTILITES RELOCATION NOTES:

1. THE CONTRACTOR SHALL FURNISH ALL LABOR, MATERIAL, EQUIPMENT AND TOOLS AND PERFORM ALL OPERATIONS IN CONNECTION WITH THE RELOCATION OF THE 12" ø WATER IN ACCORDANCE WITH THESE DRAWINGS AND APPLICABLE SPECIFICATIONS.

SCALE 1"=10'
10' 0 10' 20' 30' 40'

SYMBOL	DESCRIPTION	DATE	APPROVED
REVISIONS			

U.S. ARMY ENGINEER DISTRICT, NEW ORLEANS
CORPS OF ENGINEERS
NEW ORLEANS, LOUISIANA

BOARD OF LEVEE COMMISSIONERS
ORLEANS LEVEE DISTRICT
NEW ORLEANS, LOUISIANA
MEYER ENGINEERS, LTD. METAIRIE, LOUISIANA

LAKE PONTCHARTRAIN, LA. AND VICINITY
HIGH LEVEL PLAN
LONDON AVE. OUTFALL CANAL, PARALLEL PROTECTION FLOODPROOFING OF MIRABEAU AVE. & FILMORE AVE. BRIDGES
ORLEANS PARISH, LOUISIANA

MIRABEAU AVENUE SEALED BRIDGE UTILITY RELOCATIONS

DESIGNED BY: JCS	DATE: 3-12-01	PLOT SCALE: 1"=10'	PLOT DATE: 6-27-01
DRAWN BY: MJF			
CHECKED BY: JCS	CADD FILE: 9362b14A		FILE NO. H-4-44674
SUBMITTED BY: MEYER ENGINEERS, LTD. DESIGN ENGINEER	SOLICITATION NO. DACW29-01-B-0092		DWG. 14a OF 97

Safety is a Part of Your Contract

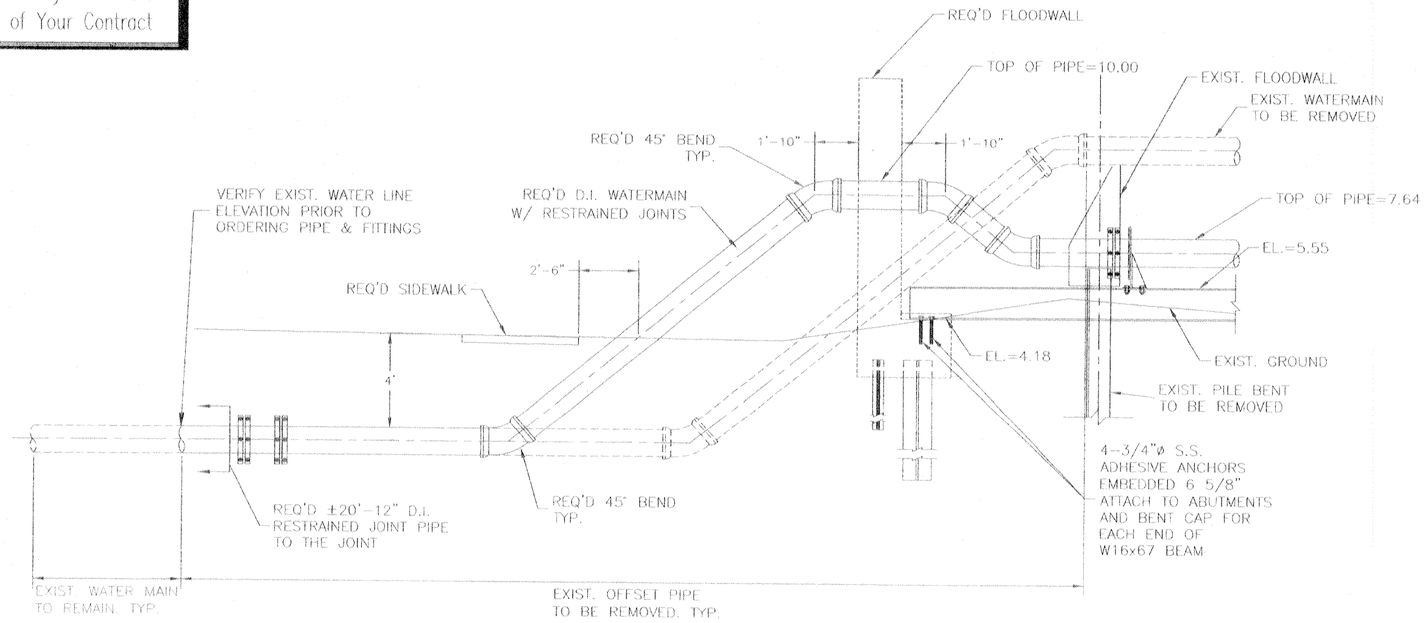

DETAIL 1 (14c|14d)

SCALE: 1"=4'-0"

(TYPICAL ON BOTH ENDS)

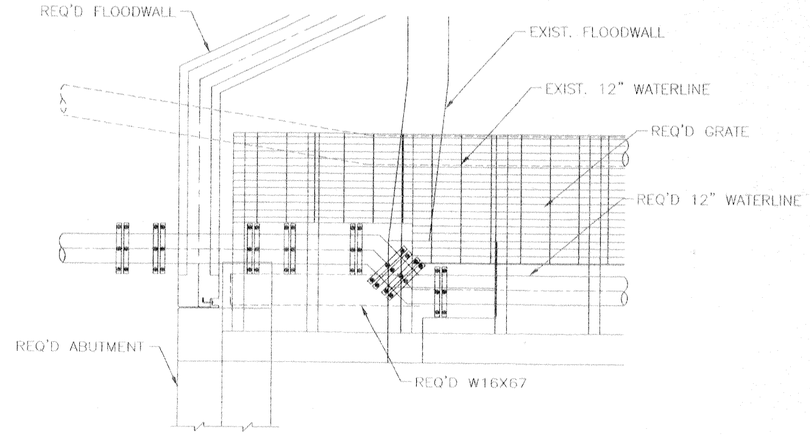

DETAIL 2 (14c|14d)

SCALE: 1"=4'-0"

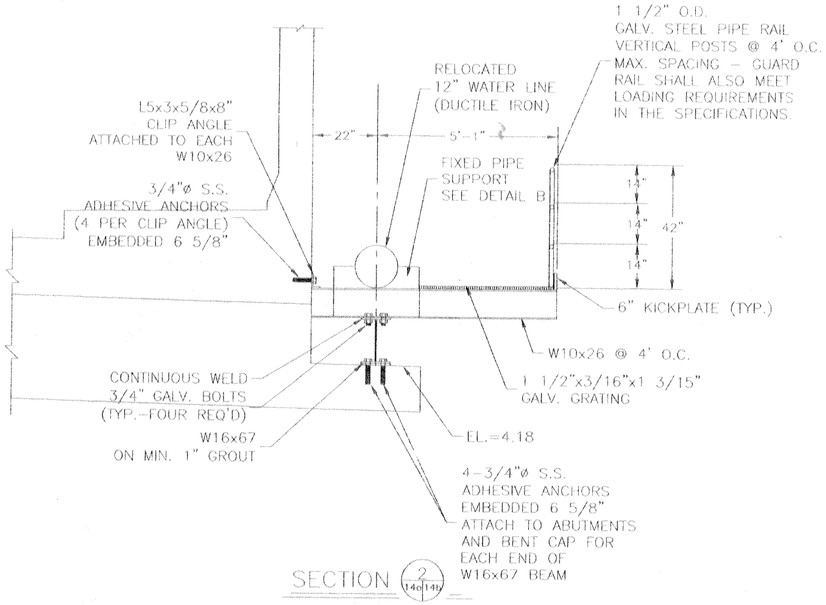

SECTION 2 (14c|14d)

SCALE: 1"=6'-0"

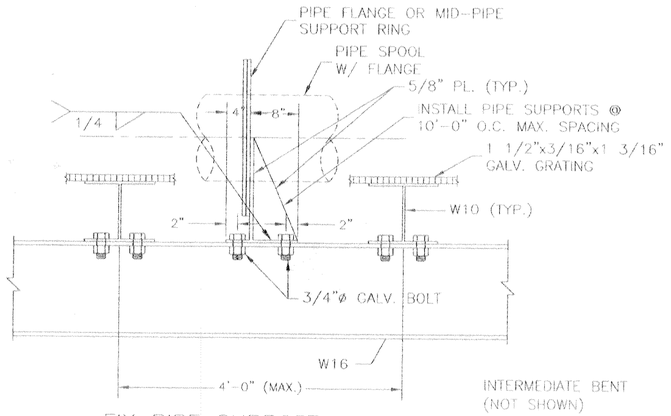

FIX PIPE SUPPORT DETAIL (B)

SCALE: 1"=5'

INTERMEDIATE BENT (NOT SHOWN)

NOTE:

EXISTING UTILITY LOACTIONS BASED ON FIELD SURVEY AND INFORMATION FROM UTILITY AGENCIES. CONTRACTOR SHALL ARRANGE FOR OWNER TO WORK UTILITY IN FIELD PRIOR TO CONSTRUCTION.

REFERENCE DRAWINGS:

FOR GENERAL NOTES, SEE DWG. NO. 4
FOR PLAN/PROFILE, SEE DWG. NO. 7
FOR UTILITY RELOCATION PLANS, SEE DWGS. NOS. 12-14c

SYMBOL	DESCRIPTION	DATE	APPROVED
	REVISIONS		

U.S. ARMY ENGINEER DISTRICT, NEW ORLEANS
CORPS OF ENGINEERS
NEW ORLEANS, LOUISIANA

BOARD OF LEVEE COMMISSIONERS
ORLEANS LEVEE DISTRICT
NEW ORLEANS, LOUISIANA
MEYER ENGINEERS, LTD. METAIRIE, LOUISIANA

LAKE PONTCHARTRAIN, LA. AND VICINITY
HIGH LEVEL PLAN
LONDON AVE. OUTFALL CANAL, PARALLEL PROTECTION FLOODPROOFING OF MIRABEAU AVE. & FILMORE AVE. BRIDGES
ORLEANS PARISH, LOUISIANA

MIRABEAU AVENUE SEALED BRIDGE UTILITY RELOCATIONS

DESIGNED BY: JCS	DATE: 3-12-01	PLOT SCALE: 1"=10'	PLOT DATE: 6-27-01
DRAWN BY: MJF			
CHECKED BY: JCS	CADD FILE: 9362b14b		FILE NO. H-4-44674
SUBMITTED BY: MEYER ENGINEERS, LTD. DESIGN ENGINEER	SOLICITATION NO. DACW29-01-B-0092		DWG. 14b OF 97

Safety is a Part of Your Contract

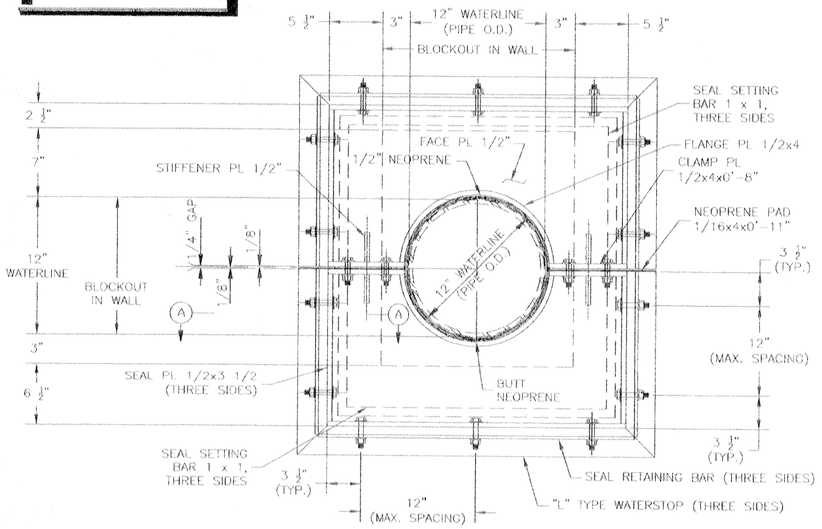

FLOOD SIDE ELEVATION

FRONTING PROTECTION UTILITY DETAIL

SCALE: 1"=1'

ASSEMBLY SEQUENCE
AFTER THE TWO FRAMES ARE LOOSELY CLAMPED ON THE PIPE, THE TOTAL ASSEMBLY SHALL BE PUSHED AGAINST THE WALL, SETTING THE SEALS, THEN TIGHTEN CLAMP PLATES TO CLOSE THE 1/4" GAP.

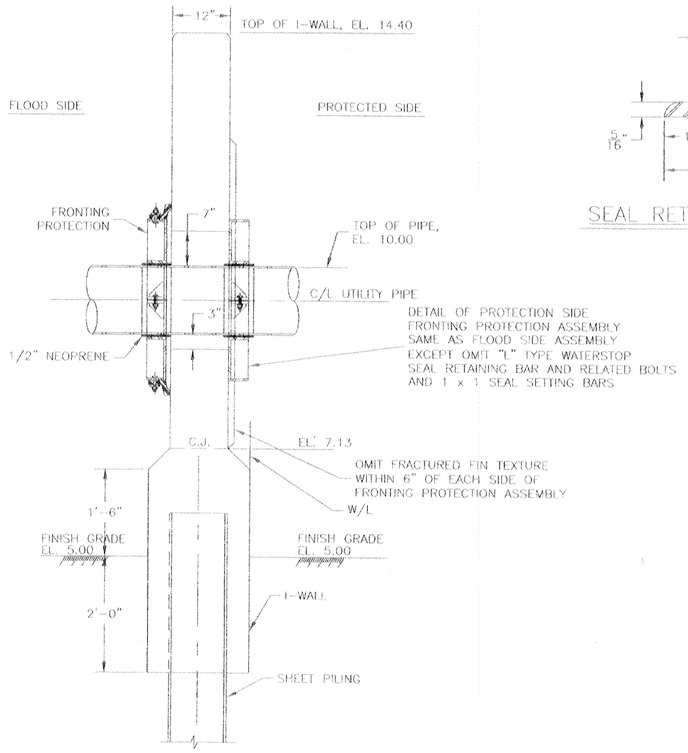

SECTION THRU FLOODWALL

SCALE: 1/2"=1'-0"

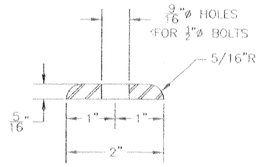

SEAL RETAINING BAR

SCALE: N.T.S.

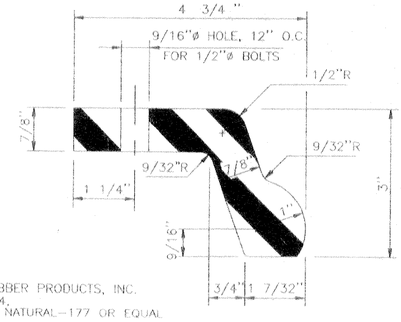

BUCKHORN RUBBER PRODUCTS, INC.
MOLD NO. 6404.
SPECIFICATION: NATURAL-177 OR EQUAL

"L" TYPE WATERSTOP

SCALE: N.T.S.

NOTES:

1. THIS DETAIL IS BASED ON THE NEW WALL FACE BEING PERPENDICULAR TO THE PIPE.
2. ALL MATERIAL FOR FRONTING PROTECTION SHALL BE ALUMINUM, UNLESS NOTED OTHERWISE.
3. ALL STRUCTURAL ALUMINUM PLATES AND BARS SHALL BE ASTM B 209, TYPE 6061-T6.
4. ALL CORROSION RESISTANT STEEL (C.R.S.) SHALL BE TYPE 316.

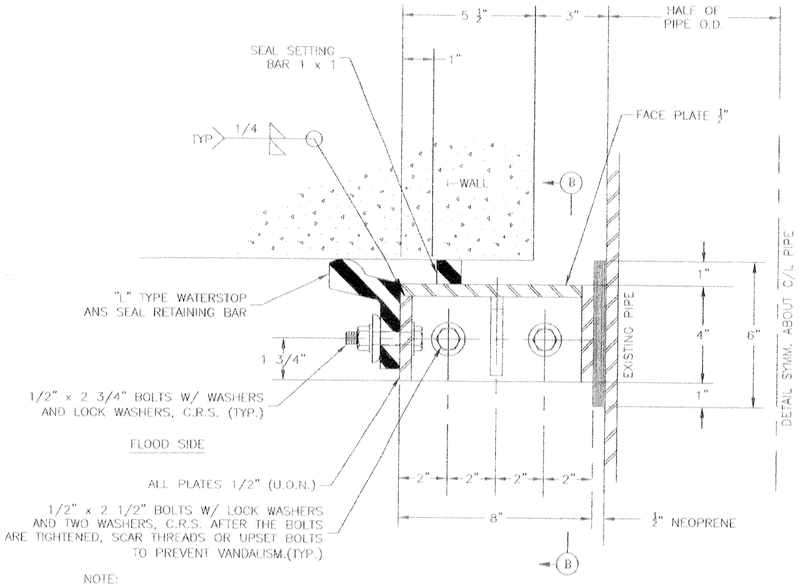

NOTE:
SET SEAL FOR A MINIMUM OF A 1/4" INITIAL DEFLECTION.

SECTION (A)

SCALE: 1"=1/2'

NOTE:
WELDS SHOWN ARE TYPICAL FOR SIMILAR JOINTS AND ALL WELDS ON WALL SIDE OF FACE PLATE SHALL BE FLUSH WITH BASE METAL.

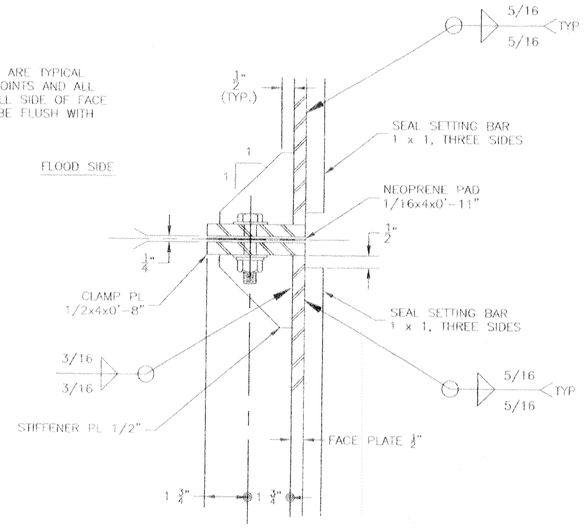

SECTION (B)

SCALE: 1"=1/2'

SCALE: 1" = 2'-0"

2' 1' 0 1' 2' 3'

SCALE: 1" = 1'-0"

1' 6" 0 6" 1' 2'

SCALE: 1" = 1/2"

20" 10" 0 5" 10" 20" 40"

SYMBOL	DESCRIPTION	DATE	APPROVED
	REVISIONS		

U.S. ARMY ENGINEER DISTRICT, NEW ORLEANS
CORPS OF ENGINEERS
NEW ORLEANS, LOUISIANA

BOARD OF LEVEE COMMISSIONERS
ORLEANS LEVEE DISTRICT
NEW ORLEANS, LOUISIANA

MEYER ENGINEERS, LTD. METAIRIE, LOUISIANA

LAKE PONTCHARTRAIN, LA. AND VICINITY
HIGH LEVEL PLAN

LONDON AVE. OUTFALL CANAL, PARALLEL PROTECTION FLOODPROOFING OF MIRABEAU AVE. & FILMORE AVE. BRIDGES
ORLEANS PARISH, LOUISIANA

MIRABEAU AVENUE SEALED BRIDGE UTILITY RELOCATIONS

DESIGNED BY: JCS	DATE: 3-12-01	PLOT SCALE: 1"=20'	PLOT DATE: 6-27-01
DRAWN BY: MJF			
CHECKED BY: JCS	CADD FILE: 9362b14c		FILE NO. H-4-44674
SUBMITTED BY: MEYER ENGINEERS, LTD. DESIGN ENGINEER	SOLICITATION NO. DACW29-01-B-0092		DWG. 14c OF 97

C-A-D

VALUE ENGINEERING INCENTIVE CLAUSES TO YOUR KEY TO HIGHER PROFITS

Safety is a Part of Your Contract

PROPERTY LINE

C.O.E. W B/L 355+40'22.3"

NEW LEAD SPLICE STA. 70+66 (TEMPORARY AND PERMANENT)

EXIST. ELECTRIC FEEDER CABLE TO REMAIN

EXIST. ELECTRIC FEEDER CABLE TO REMAIN

LIMIT OF EXIST. ELEC. FEEDER CABLE TO BE RELOCATED STA. 70+66 W B/L

RELOCATED PERMANENT ELECTRICAL FEEDER CABLE (FL-400) (ATTACHED TO NEW FLOODWALL) SEE DETAIL 3 ON DWG. 16

RELOCATED EXISTING ELECTRICAL FEEDER CABLE (FL-340) (ATTACHED TO NEW FLOODWALL) SEE DETAIL 3 ON DWG. 16

RELOCATE EXIST. ELECTRIC FEEDER CABLE

3 15/16

2 15/16

W/L

TEMPORARY ELECTRICAL FEEDER CABLE (FL-400) C.L.X. CABLE SEE NOTE 2

EXISTING ELECTRICAL FEEDER CABLE (FL-400) TO BE RELOCATED SEE NOTE 1

70+00

LOCATION OF RELOCATED PERMANENT ELECTRICAL FEEDER CABLE (FL-400) SEE NOTE 3

MIRABEAU BRIDGE

℄ OF BRIDGE AND PROJECT

EQUATION:
STA. 69+48.05 C.O.E. W B/L
STA. 19+78.11 BFM B/L

BFM B/L "B"

EXIST. FEEDER CABLE SPLICE

P.I. STA 69+40.25(LCW-9)
C.O.E. WEST BASELINE

LONDON AVE OUTFALL CANAL

PROPERTY LINE

69+00

LIMIT OF EXIST. ELEC. FEEDER CABLE TO BE RELOCATED STA. 68+85 W B/L

RELOCATED PERMANENT ELECTRICAL FEEDER CABLE (FL-400) (ATTACHED TO NEW FLOODWALL) SEE DETAIL 3 ON DWG. 16

C.O.E. W B/L 356°02'40.4"

NEW LEAD SPLICE STA. 68+85 (TEMPORARY AND PERMANENT)

EXIST. ELECTRIC FEEDER CABLE TO REMAIN

U.S. ARMY CORPS OF ENGINEERS W B/L

EXIST. ELECTRIC FEEDER CABLE TO REMAIN

21+00

EXIST. ELECTRIC FEEDER CABLE TO REMAIN

LIMIT OF EXIST. ELECT. FEEDER CABLE TO BE RELOCATED STA. 70+45 E B/L

EXIST. ELECTRICAL FEEDER CABLE (FL-432) SEE NOTE 7

C.O.E. E B/L 356°41'37.9"

PROPERTY LINE

70+00

RELOCATE EXIST. ELECTRIC FEEDER CABLE

3 15/16

5 15/16

W/L

EXISTING ELECTRICAL FEEDER CABLE (FL-340) SEE NOTES 1&4

LOCATION OF RELOCATED EXISTING ELECTRICAL FEEDER CABLE (FL-340) SEE NOTE 4

EQUATION:
STA. 69+16.99 C.O.E. E B/L
STA. 21+17.03 BFM B/L

P.I. STA. 69+15.97(LCE-10)
C.O.E. EAST BASELINE

69+00

W/L

2 15/16

4 15/16

3 15/16

PROPERTY LINE

RELOCATED EXISTING ELECTRICAL FEEDER CABLE (FL-340) (ATTACHED TO NEW FLOODWALL) SEE DETAIL 3 ON DWG. 16

LIMIT OF EXIST. ELEC. FEEDER CABLE TO BE RELOCATED STA. 68+60 E B/L

RELOCATE EXIST. ELECTRIC FEEDER CABLE

EXIST. ELECTRIC FEEDER CABLE TO REMAIN

C.O.E. E B/L 356°01'42.0"

U.S. ARMY CORPS OF ENGINEERS E B/L

PROPERTY LINE

68+00

NOTES:

1. EACH EXISTING FEEDERS FL-340 AND FL-400 CONSIST OF A THREE CONDUCTOR STEEL ARMORED SUBMARINE, 400 MCM COPPER, RUBBER INSULATED, LEAD COVERED 15 KV POWER CABLE.
2. THE EXISTING FEEDER FL-400 BETWEEN STA. 68+85 AND 70+66 C.O.E. W/BL SHALL BE TEMPORARILY REROUTED FROM IT'S EXISTING POSITION INTO A TRENCH ON THE CANAL SIDE OF THE EXISTING FLOODWALL PRIOR TO DEMOLITION OF THE EXISTING FLOODWALL. THE TEMPORARY FEEDER SHALL BE COVERED WITH A STRIP OF ONE-QUARTER INCH THICK STEEL PLATE. THE TEMPORARY FEEDER SHALL CONSIST OF A 15 KV, TYPE MV-105, OKOGUARD, 133% INSULATION LEVEL, 500 MCM, 3/COND. C-L-X CABLE WITH OKOSEAL JACKET. THE FEEDER SHALL BE ATTACHED ALONG THE NEW AND EXISTING FLOODWALL ON BOTH THE NORTH AND SOUTH SIDES OF THE BRIDGE AS SHOWN. ONE (1) TEMPORARY 15 KV STANDARD CABLE SPLICE KIT (RAYCHEM-TYPE HVS WITH SHRINKABLE BREAKOUT BOOT) SHALL BE REQUIRED AT STA. 68+85 AND 70+66. REMOVE THE OLD SECTION OF CABLE ONCE THE TEMPORARY CABLE IS OPERATIONAL.
3. AFTER THE NEW FLOODWALL IS COMPLETED, THE NEW PERMANENT FEEDER FL-400 SHALL BE INSTALLED AS SHOWN. THE NEW FEEDER SHALL CONSIST OF A 15 KV, TYPE MV-105, OKOGUARD-OKOSEAL, 133% INSULATION LEVEL, 500 MCM, 3/COND., SHIELDED, LEAD COVERED PVC JACKET CABLE INSTALL IN A FIVE (5") GALV. STEEL CONDUIT AND ATTACH TO FLOODWALL WITH 5" MALLEABLE IRON ONE-HOLE CLAMPS W/CLAMP BACK. ONE PERMANENT 15 KV STRAIGHT LEAD CABLE SPLICE KIT SHALL BE REQUIRED AT STA. 68+85 AND STA. 70+66. REMOVE THE TEMPORARY CABLE ONCE THE PERMANENT CABLE IS OPERATIONAL.
4. THE EXISTING FEEDER (FL-340) BETWEEN STA. 68+60 AND 70+45 C.O.E. E B/L SHALL REMAIN IN PLACE. AFTER COMPLETION OF NEW BRIDGE AND FLOODWALL, THE EXISTING FEEDER SHALL BE PERMANENTLY ATTACHED TO THE EXISTING AND NEW FLOODWALL WITH FIVE (5") INCH MALLEABLE IRON ONE-HOLE CLAMPS W/ CLAMP BACK.
5. THE CONTRACTOR SHALL AVOID EXCESSIVE OR ERRATIC MOVEMENT OF FEEDER CABLE WITH SPECIAL ATTENTION PAID TO THE EXISTING SPLICES WHICH CANNOT WITHSTAND ANY GREAT DEGREE OF MOVEMENT OR BENDING. ANY EXISTING SPLICES DAMAGED SHALL BE REPAIRED BY THE CONTRACTOR AT NO EXPENSE TO THE GOVERNMENT.
6. THE CONTRACTOR SHALL USE EXTREME CAUTION WHEN REMOVING EACH EXISTING FLOODWALL.
7. THE EXISTING FEEDER (FL-432) SHALL REMAIN IN PLACE.

REFERENCE DRAWINGS

FOR GENERAL NOTES, SEE DWG. 4
FOR PLAN/PROFILE, SEE DWG. 7
FOR UTILITY PLAN, SEE DWGS. 12
FOR UTILITY DISPOSITION, SEE DWG. 13
FOR ELECTRICAL FEEDER DETAILS, SEE DWG. 16

ELECTRIC FEEDER KEY PLAN
SCALE 1"=10'
10' 0 10' 20' 30' 40'

VALUE ENGINEERING INCENTIVE CLAUSES YOUR KEY TO HIGHER PROFITS

SYMBOL	DESCRIPTION	DATE	APPROVED
	REVISIONS		

U.S. ARMY ENGINEER DISTRICT, NEW ORLEANS
CORPS OF ENGINEERS
NEW ORLEANS, LOUISIANA

BOARD OF LEVEE COMMISSIONERS
ORLEANS LEVEE DISTRICT
NEW ORLEANS, LOUISIANA

MEYER ENGINEERS, LTD. METAIRIE, LOUISIANA

LAKE PONTCHARTRAIN, LA. AND VICINITY
HIGH LEVEL PLAN

LONDON AVE. OUTFALL CANAL, PARALLEL PROTECTION FLOODPROOFING OF MIRABEAU AVE. & FILMORE AVE. BRIDGES
ORLEANS PARISH, LOUISIANA

MIRABEAU AVENUE SEALED BRIDGE ELECTRIC FEEDER RELOCATION PLAN

C-A-D

DESIGNED BY: JCS	DATE: 3-12-01	PLOT SCALE: 1"=10'	PLOT DATE: 6-27-01
DRAWN BY: MJS			
CHECKED BY: JCS	CADD FILE: 936281S		FILE NO. H-4-4461
SUBMITTED BY: MEYER ENGINEERS, LTD. DESIGN ENGINEER	SOLICITATION NO.: DACW29-01-B-0092		DWG. 15 OF 97

Safety is a Part of Your Contract

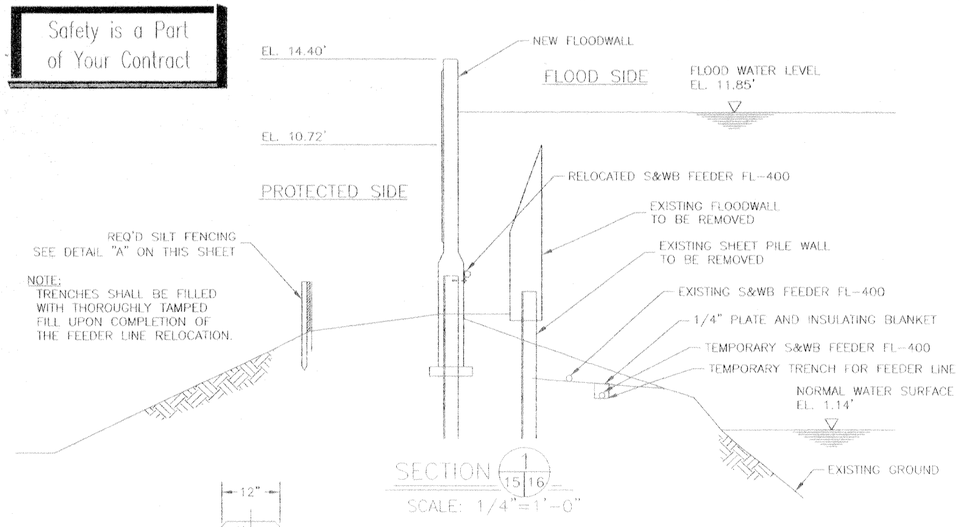

SECTION 1/15/16

SCALE: 1/4"=1'-0"

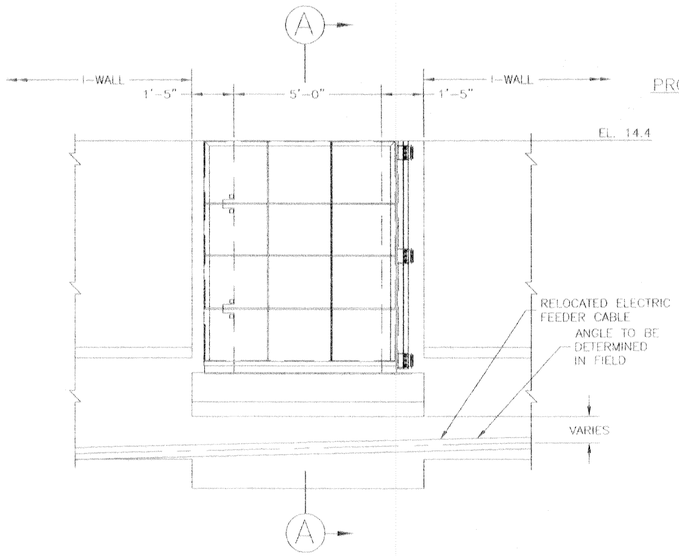

ELECTRIC FEEDER LINE RELOCATED UNDERNEATH PEDESTRIAN GATE ELEVATION

DETAIL 2/15/16

SCALE: 1/2"=1'-0"

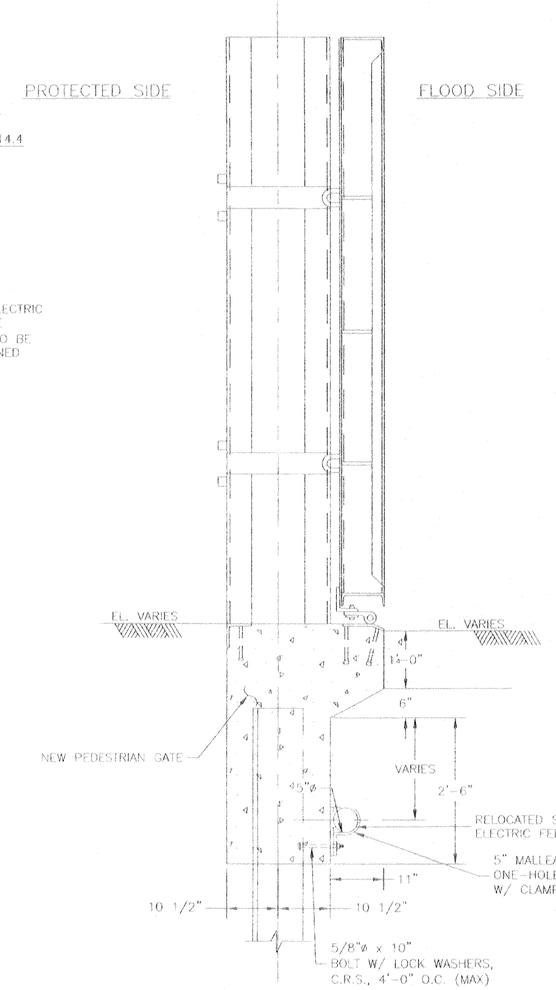

ELECTRIC FEEDER LINE RELOCATED UNDERNEATH PEDESTRIAN GATE SECTION

SECTION A

SCALE: 1" = 1' - 0"

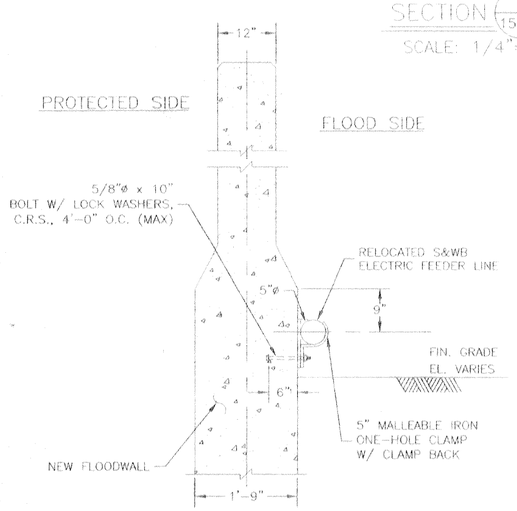

ELECTRIC FEEDER LINE RELOCATED CONNECTED TO FLOODWALL

DETAIL 3/15/16

SCALE: 1"=1'-0"

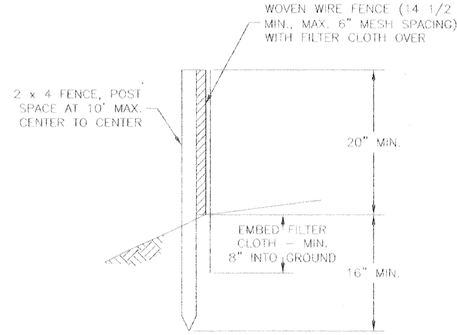

SILT FENCE

DETAIL (A)

SCALE: 1" = 1' - 0"

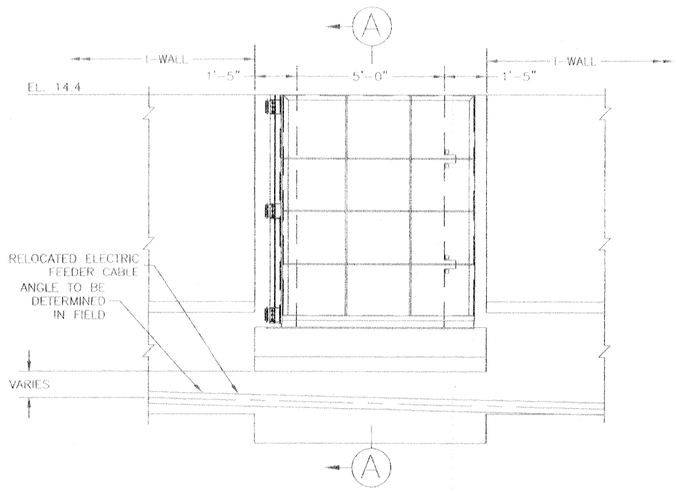

ELECTRIC FEEDER LINE RELOCATED UNDERNEATH PEDESTRIAN GATE ELEVATION

DETAIL 5/15/16

SCALE: 1/2"=1'-0"

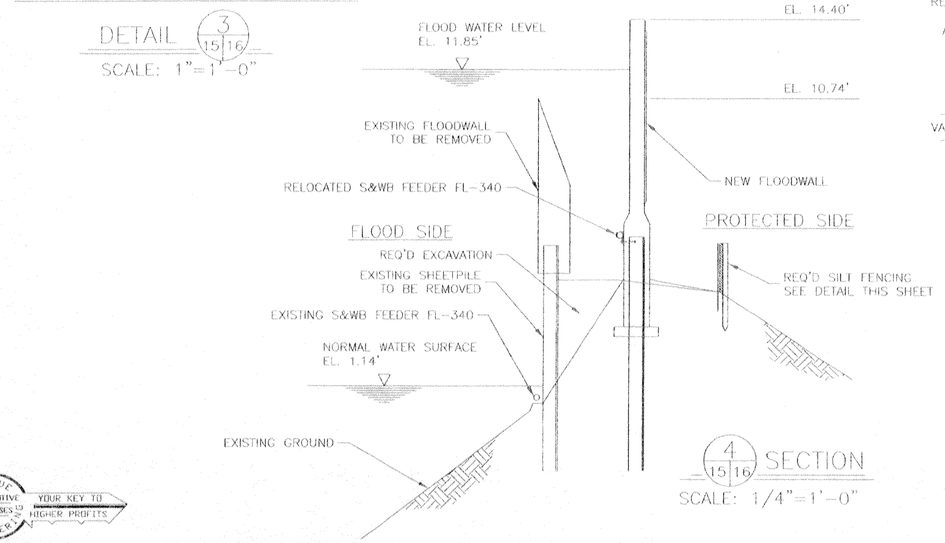

4/15/16 SECTION

SCALE: 1/4"=1'-0"

REFERENCE DRAWINGS

FOR GENERAL NOTES, SEE DWG. NO. 4
FOR FLOODWALL PLAN, SEE DWG. NO. 18a
FOR DETAILED FLOODWALL PLAN, SEE DWG. NO. 20
FOR FLOODWALL DETAILS, SEE DWGS. NOS. 21-24
FOR I-WALL REINFORCING, SEE DWG. NO. 25a
FOR PEDESTRIAN GATE DETAILS, SEE DWG. NO. 26 & 27

SCALE: 1/2 " = 1' - 0"

12" 0 2' 4' 6' 8'

SCALE: 1/4 " = 1'- 0"

12"0 5' 10' 15' 20'

SCALE: 1" = 1'- 0"

12" 0 1' 2' 3' 4' 5'

SYMBOL	DESCRIPTION	DATE	APPROVED

REVISIONS

U.S. ARMY ENGINEER DISTRICT, NEW ORLEANS
CORPS OF ENGINEERS
NEW ORLEANS, LOUISIANA

BOARD OF LEVEE COMMISSIONERS
ORLEANS LEVEE DISTRICT
NEW ORLEANS, LOUISIANA

MEYER ENGINEERS, LTD. METAIRIE, LOUISIANA
LAKE PONTCHARTRAIN, LA. AND VICINITY

HIGH LEVEL PLAN

LONDON AVE. OUTFALL CANAL, PARALLEL PROTECTION FLOODPROOFING OF MIRABEAU AVE. & FILMORE AVE. BRIDGES

ORLEANS PARISH, LOUISIANA

MIRABEAU AVENUE SEALED BRIDGE ELECTRIC FEEDER RELOCATION PLAN

DESIGNED BY: JCS	DATE: 3-12-01	PLOT SCALE: 1"=1'	PLOT DATE: 6-27-01
DRAWN BY: MJF			
CHECKED BY: JCS	CADD FILE: 9382816		FILE NO. H-4-44674
SUBMITTED BY: MEYER ENGINEERS, LTD. DESIGN ENGINEER	SOLICITATION NO. DACW29-01-B-0092		DWG. 16 OF 97

VALUE INCENTIVE CLAUSES YOUR KEY TO HIGHER PROFITS

Safety is a Part of Your Contract

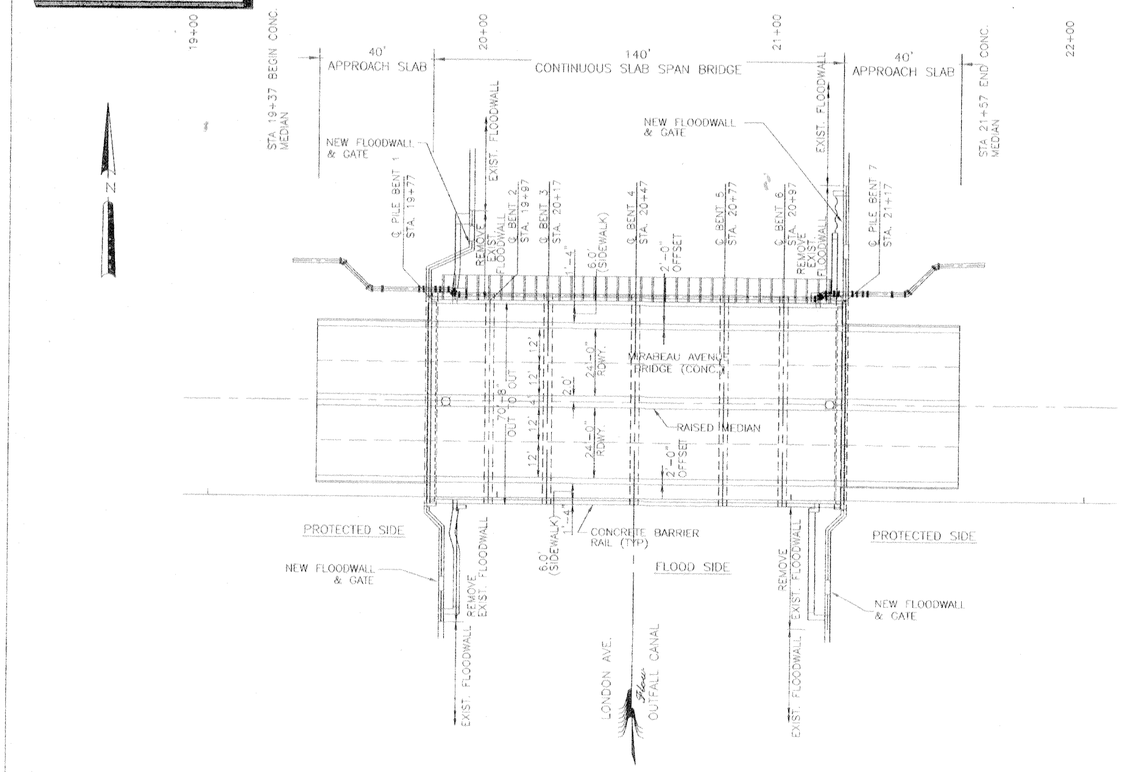

STRUCTURE PLAN
SCALE 1"=20'
20' 0 20' 40' 60' 80'

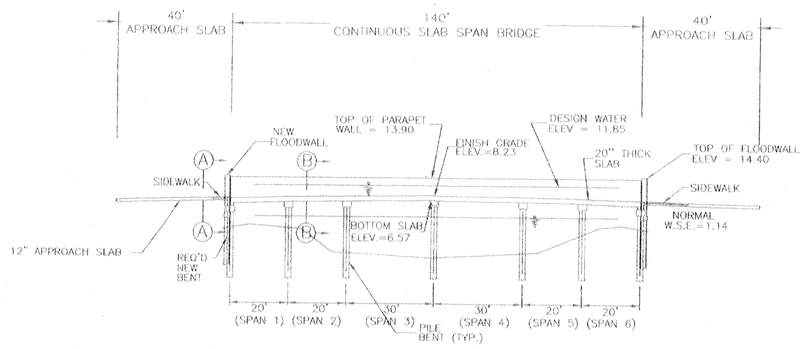

STRUCTURE ELEVATION
SCALE 1"=20'
20' 0 20' 40' 60' 80'

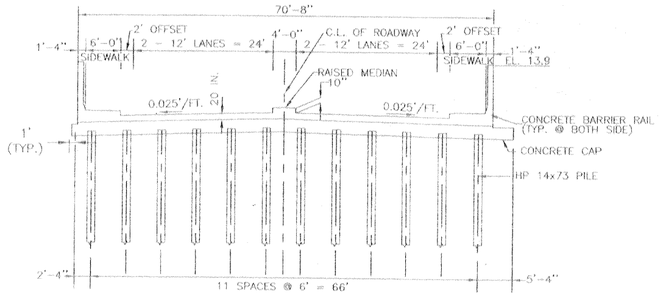

SECTION A-A
STRUCTURE SECTION
SCALE 1"=20'
10' 0 10' 20' 30' 40'

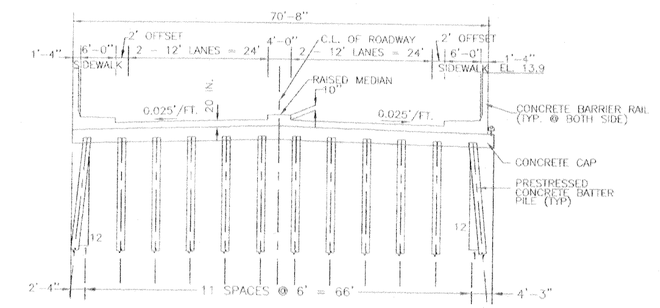

SECTION B-B
STRUCTURE SECTION
SCALE 1"=20'
10' 0 10' 20' 30' 40'

SYMBOL	DESCRIPTION	DATE	APPROVED
	REVISIONS		

U.S. ARMY ENGINEER DISTRICT, NEW ORLEANS
CORPS OF ENGINEERS
NEW ORLEANS, LOUISIANA

BOARD OF LEVEE COMMISSIONERS
ORLEANS LEVEE DISTRICT
NEW ORLEANS, LOUISIANA

MEYER ENGINEERS, LTD. METAIRIE, LOUISIANA

LAKE PONTCHARTRAIN, LA. AND VICINITY
HIGH LEVEL PLAN

LONDON AVE. OUTFALL CANAL, PARALLEL PROTECTION FLOODPROOFING OF MIRABEAU AVE. & FILMORE AVE. BRIDGES
ORLEANS PARISH, LOUISIANA

MIRABEAU AVENUE SEALED BRIDGE STRUCTURE PLAN AND ELEVATION

DESIGNED BY: JCS	DATE: 3-12-01	PLOT SCALE: 1"=20'	PLOT DATE: 6-27-01
DRAWN BY: MJF			
CHECKED BY: JCS	CADD FILE: 936207		FILE NO. H-4-44674
SUBMITTED BY: MEYER ENGINEERS, LTD. DESIGN ENGINEER	SOLICITATION NO. DACW29-01-B-0092		DWG. 17 OF 97

VALUE ENGINEERING INCENTIVE CLAUSES IS YOUR KEY TO HIGHER PROFITS

C•A•D

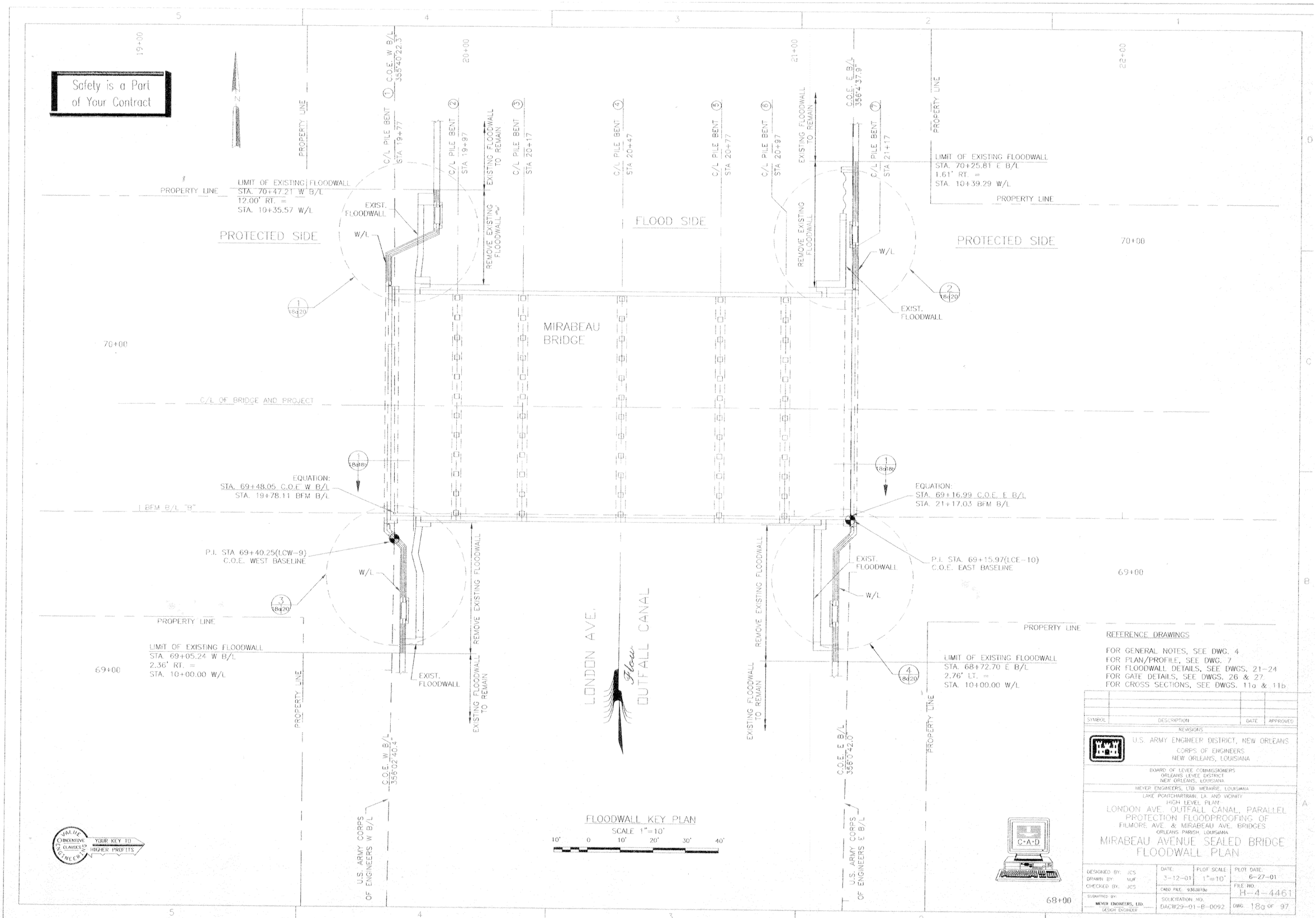

REFERENCE DRAWINGS

FOR GENERAL NOTES, SEE DWG. 4
FOR PLAN/PROFILE, SEE DWG. 7
FOR FLOODWALL DETAILS, SEE DWGS. 21-24
FOR GATE DETAILS, SEE DWGS. 26 & 27
FOR CROSS SECTIONS, SEE DWGS. 11a & 11b

SYMBOL	DESCRIPTION	DATE	APPROVED
	REVISIONS		

U.S. ARMY ENGINEER DISTRICT, NEW ORLEANS
CORPS OF ENGINEERS
NEW ORLEANS, LOUISIANA

BOARD OF LEVEE COMMISSIONERS
ORLEANS LEVEE DISTRICT
NEW ORLEANS, LOUISIANA

MEYER ENGINEERS, LTD. METAIRIE, LOUISIANA

LAKE PONTCHARTRAIN, LA. AND VICINITY
HIGH LEVEL PLAN
LONDON AVE. OUTFALL CANAL, PARALLEL PROTECTION FLOODPROOFING OF FILMORE AVE. & MIRABEAU AVE. BRIDGES
ORLEANS PARISH, LOUISIANA

MIRABEAU AVENUE SEALED BRIDGE FLOODWALL PLAN

DESIGNED BY: JCS DRAWN BY: MJF CHECKED BY: JCS	DATE: 3-12-01	PLOT SCALE: 1"=10'	PLOT DATE: 6-27-01
SUBMITTED BY: MEYER ENGINEERS, LTD. DESIGN ENGINEER	CADD FILE: 93628180		FILE NO. H-4-4461
	SOLICITATION NO. DACW29-01-B-0092		DWG. 18a OF 97

Safety is a Part of Your Contract

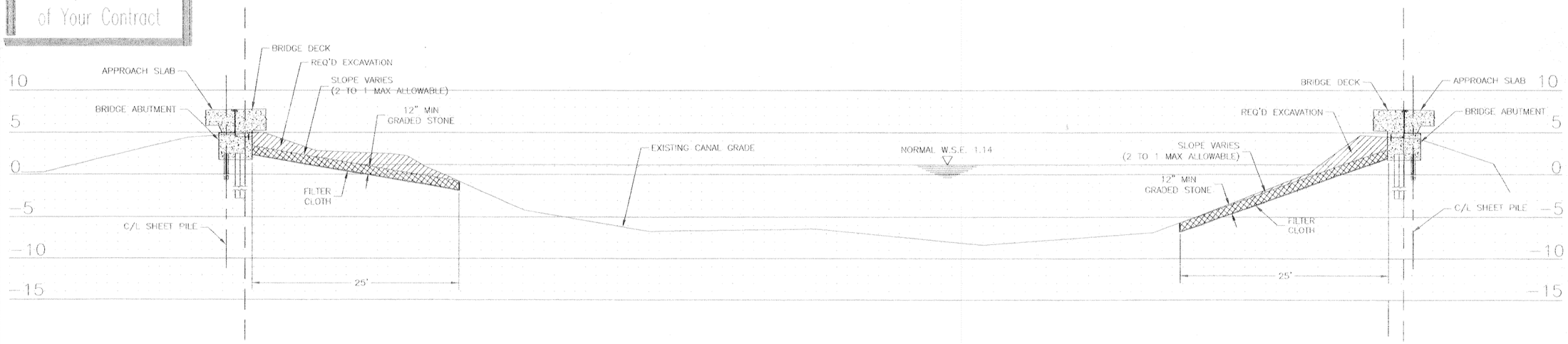

SECTION 1 / 18d 8b

STATION 70+20.65 W B/L TO 69+41.95 W B/L
STATION 69+89.56 E B/L TO 69+11.21 E B/L

10' 0 10' 20'
SCALE: 1" = 10'

SYMBOL	DESCRIPTION	DATE	APPROVED

REVISIONS

U.S. ARMY ENGINEER DISTRICT, NEW ORLEANS
CORPS OF ENGINEERS
NEW ORLEANS, LOUISIANA

BOARD OF LEVEE COMMISSIONERS
ORLEANS LEVEE DISTRICT
NEW ORLEANS, LOUISIANA

MEYER ENGINEERS, LTD. METAIRIE, LOUISIANA
LAKE PONTCHARTRAIN, LA. AND VICINITY
HIGH LEVEL PLAN

LONDON AVE. OUTFALL CANAL, PARALLEL PROTECTION FLOODPROOFING OF MIRABEAU AVE. & FILMORE AVE. BRIDGES
ORLEANS PARISH, LOUISIANA

MIRABEAU AVENUE SEALED BRIDGE
BRIDGE & CANAL - SECTIONS

DESIGNED BY: JCS DRAWN BY: MJF CHECKED BY: JCS	DATE: 3-12-01	PLOT SCALE: 1"=10'	PLOT DATE: 6-27-01
	CADD FILE: 9362B18b		FILE NO. H-4-44674
SUBMITTED BY: MEYER ENGINEERS, LTD. DESIGN ENGINEER	SOLICITATION NO. DACW29-01-B-0092		DWG. 18b OF 97

VALUE ENGINEERING INCENTIVE CLAUSES — YOUR KEY TO HIGHER PROFITS

Safety is a Part of Your Contract

C·A·D

Safety is a Part of Your Contract

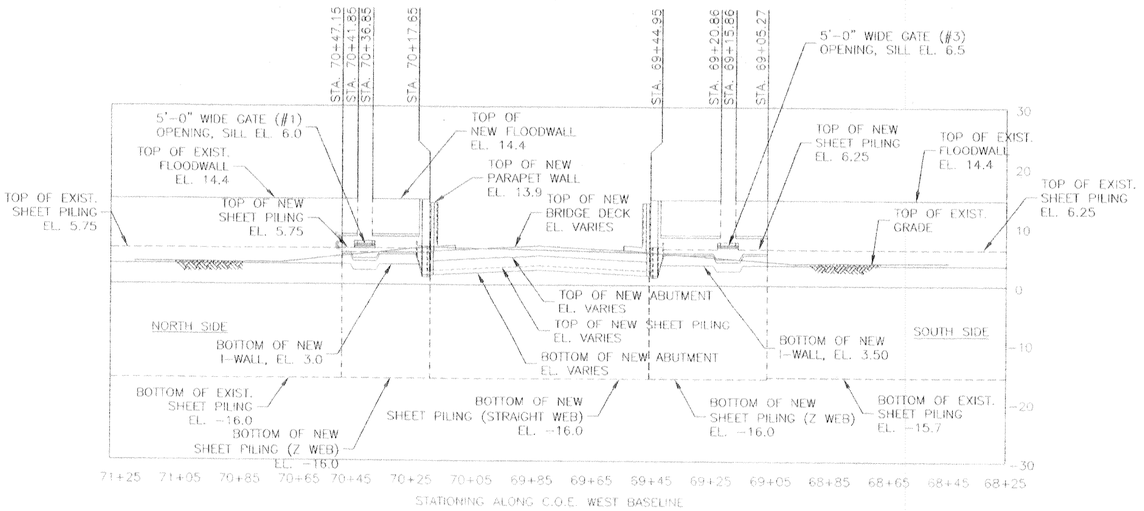

WEST PROFILE – LAND SIDE

SCALE: HOR. 1"=20'
VERT. 1"=10'

NOTE:
ALL ELEVATIONS ARE 1964 EPOCH UNLESS OTHERWISE NOTED.

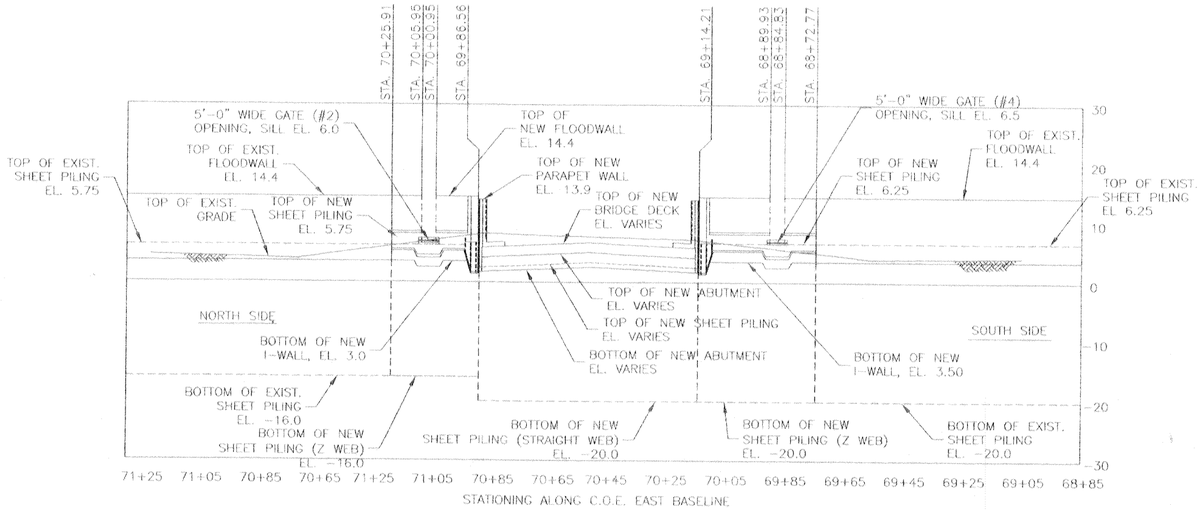

EAST PROFILE – CANAL SIDE

SCALE: HOR. 1"=20'
VERT. 1"=10'

NOTE:
ALL ELEVATIONS ARE 1964 EPOCH UNLESS OTHERWISE NOTED.

SCALE 1"=20'
10' 0 10' 20' 30' 40'

SYMBOL	DESCRIPTION	DATE	APPROVED
	REVISIONS		

U.S. ARMY ENGINEER DISTRICT, NEW ORLEANS
CORPS OF ENGINEERS
NEW ORLEANS, LOUISIANA

BOARD OF LEVEE COMMISSIONERS
ORLEANS LEVEE DISTRICT
NEW ORLEANS, LOUISIANA

MEYER ENGINEERS, LTD. METAIRIE, LOUISIANA

LAKE PONTCHARTRAIN, LA. AND VICINITY
HIGH LEVEL PLAN

LONDON AVE. OUTFALL CANAL, PARALLEL PROTECTION FLOODPROOFING OF FILMORE AVE. & MIRABEAU AVE. BRIDGES
ORLEANS PARISH, LOUISIANA

MIRABEAU AVENUE SEALED BRIDGE ABUTMENT AND I-WALL PROFILES

DESIGNED BY: JCS	DATE: 3-12-01	PLOT SCALE: 1"=20'	PLOT DATE: 6-27-01
DRAWN BY: MJF			
CHECKED BY: JCS	CADD FILE: 9362b19		FILE NO. H-4-44674
SUBMITTED BY: MEYER ENGINEERS, LTD. DESIGN ENGINEER	SOLICITATION NO. DACW29-01-B-0092		DWG. 19 OF 97

VALUE ENGINEERING INCENTIVE CLAUSES — YOUR KEY TO HIGHER PROFITS

C•A•D

Safety is a Part of Your Contract

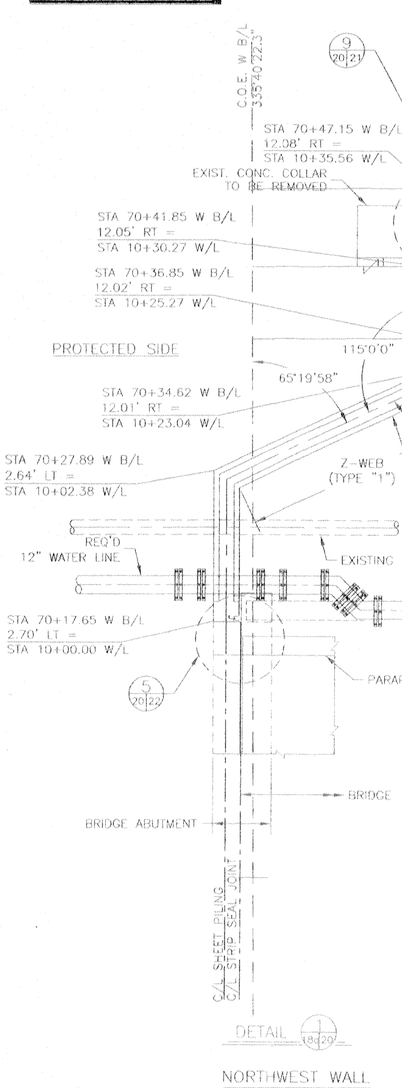

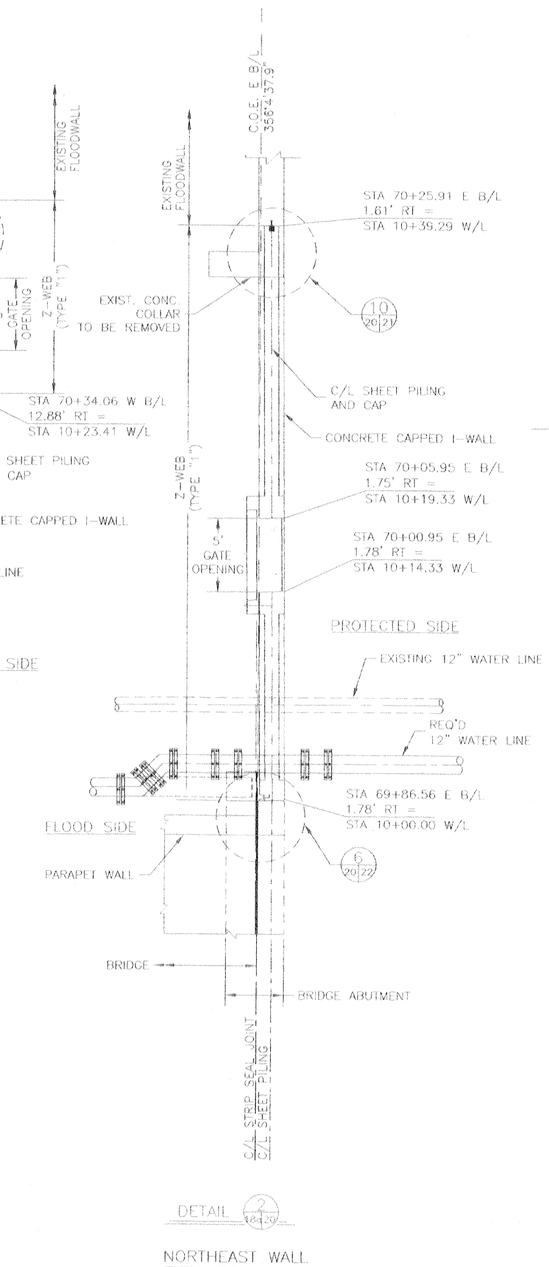

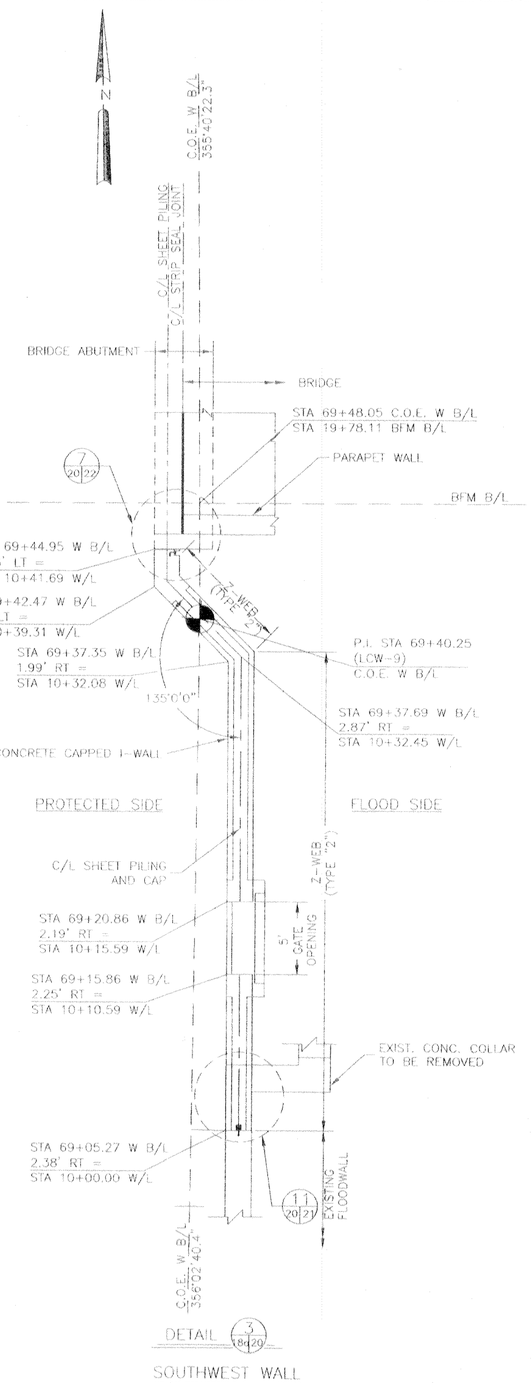

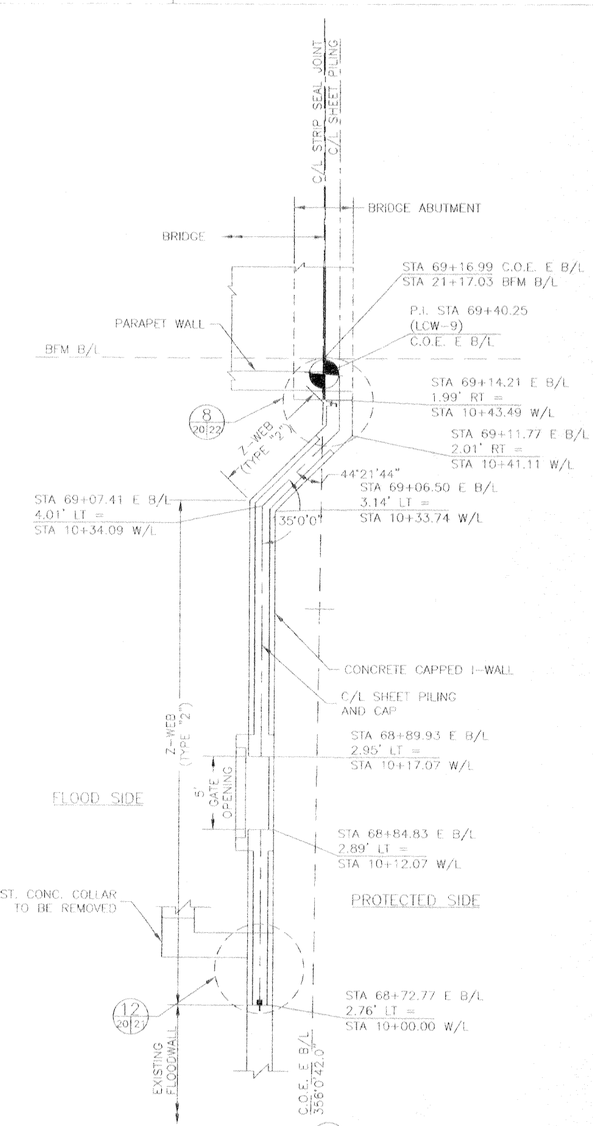

VALUE ENGINEERING — INCENTIVE CLAUSES — YOUR KEY TO HIGHER PROFITS

SCALE: 1/4"=1'-0"

4' 2' 0 4' 8' 12' 16' 20'

REFERENCE DRAWINGS
FOR GENERAL NOTES, SEE DWG. NO. 4
FOR PLAN/PROFILE, SEE DWG. NO. 7
FOR FLOODWALL PLAN, SEE DWG. NO. 18a
FOR GATE MONOLITH DETAILS,
SEE DWG. NO. 26 & 27

C+A+D

SYMBOL	DESCRIPTION	DATE	APPROVED
	REVISIONS		

U.S. ARMY ENGINEER DISTRICT, NEW ORLEANS
CORPS OF ENGINEERS
NEW ORLEANS, LOUISIANA

BOARD OF LEVEE COMMISSIONERS
ORLEANS LEVEE DISTRICT
NEW ORLEANS, LOUISIANA

MEYER ENGINEERS, LTD. METAIRIE, LOUISIANA

LAKE PONTCHARTRAIN, LA. AND VICINITY
HIGH LEVEL PLAN

LONDON AVE. OUTFALL CANAL, PARALLEL PROTECTION FLOODPROOFING OF
MIRABEAU AVE. & FILMORE AVE. BRIDGES
ORLEANS PARISH, LOUISIANA

MIRABEAU AVENUE SEALED BRIDGE DETAILED FLOODWALL PLAN

DESIGNED BY: JCS	DATE: 3-12-01	PLOT SCALE: 1"=4'	PLOT DATE: 6-27-01
DRAWN BY: MJT			
CHECKED BY: JCS	CADD FILE: 930220		FILE NO. H-4-44674
SUBMITTED BY: MEYER ENGINEERS, LTD. DESIGN ENGINEER	SOLICITATION NO. DACW29-01-B-0092		DWG. 20 OF 97

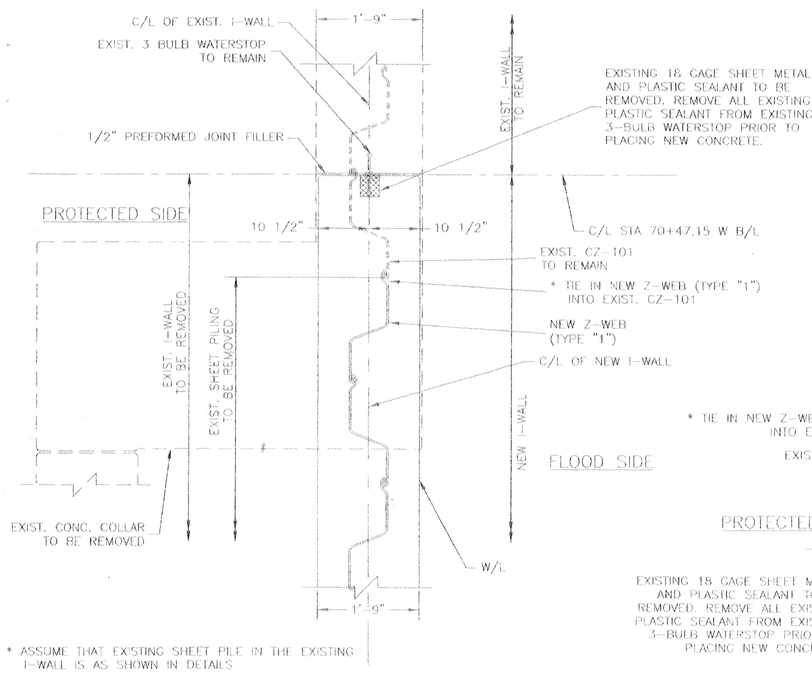

* ASSUME THAT EXISTING SHEET PILE IN THE EXISTING I-WALL IS AS SHOWN IN DETAILS

DETAIL 9/20/21

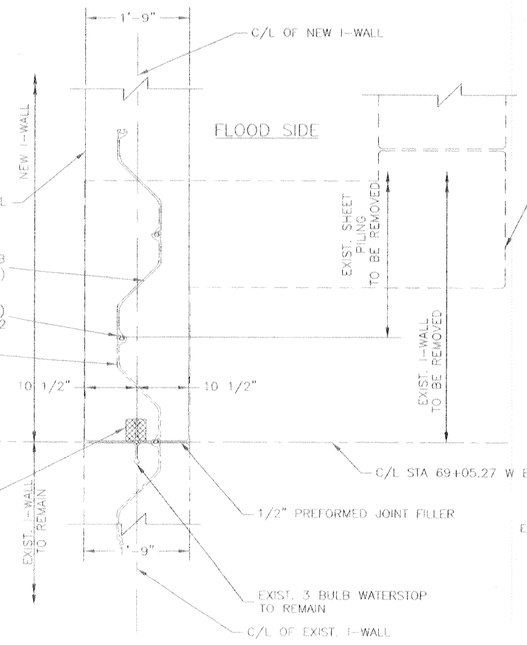

* ASSUME THAT EXISTING SHEET PILE IN THE EXISTING I-WALL IS AS SHOWN IN DETAILS

DETAIL 11/20/21

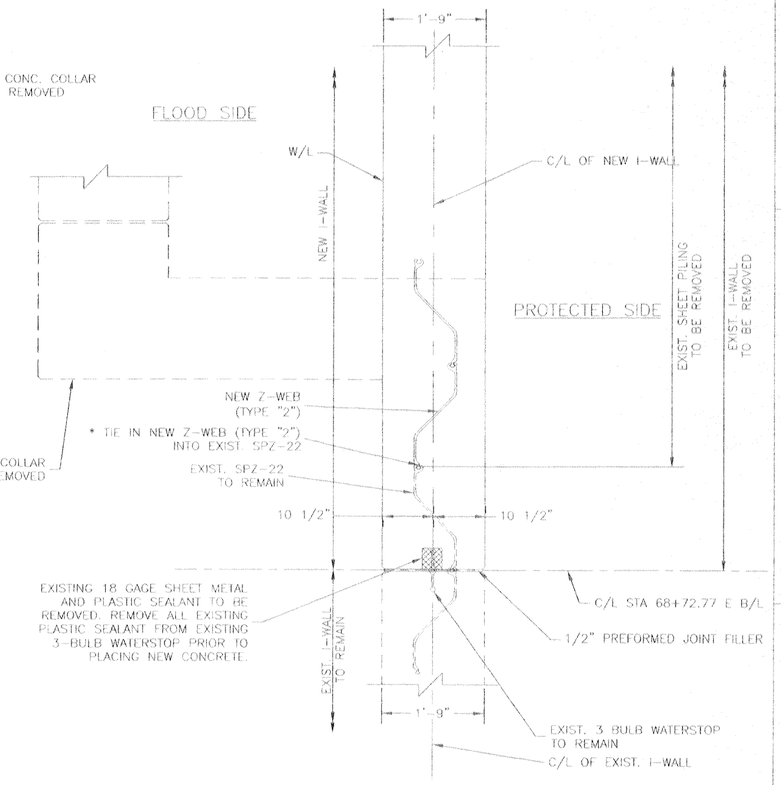

* ASSUME THAT EXISTING SHEET PILE IN THE EXISTING I-WALL IS AS SHOWN IN DETAILS

DETAIL 12/20/21

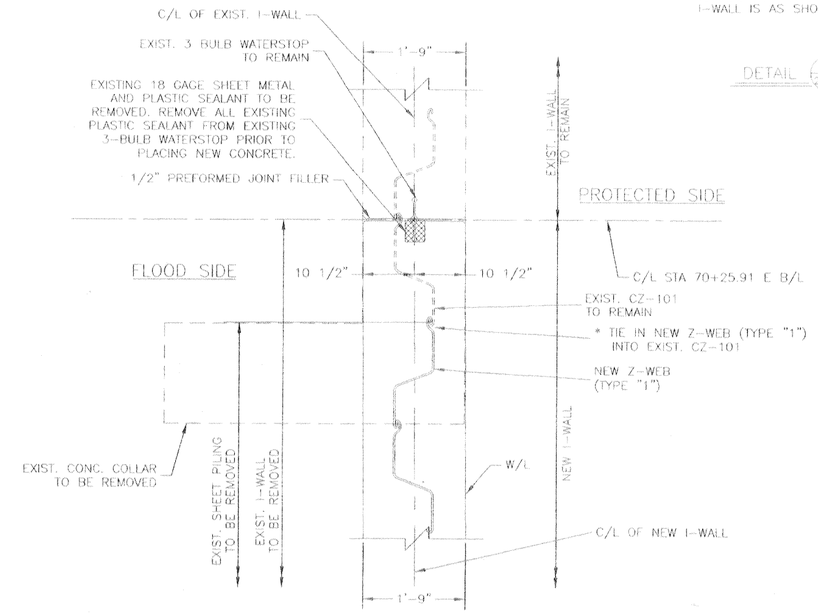

* ASSUME THAT EXISTING SHEET PILE IN THE EXISTING I-WALL IS AS SHOWN IN DETAILS

DETAIL 10/20/21

SCALE: 1" = 1'-0"

12" 0 1' 2' 3' 4' 5'

Safety is a Part of Your Contract

REFERENCE DRAWINGS

FOR GENERAL NOTES, SEE DWG. NO. 4
FOR FLOODWALL PLAN, SEE DWG. NO. 18a
FOR DETAILED FLOODWALL PLAN, SEE DWG. NO. 20
FOR FLOODWALL DETAILS, SEE DWG. NO. 21 - 24
FOR I-WALL REINFORCING, SEE DWG. NO. 25a
FOR GATE DETAILS, SEE DWG. NOS. 84-87

NOTE: - CONTRACTOR IS TO SUBMIT SHOP DRAWINGS FOR APPROVAL FROM THE CONTRACTING OFFICER, PRIOR TO FABRICATION OF ANY MATERIALS. THESE SHOP DRAWINGS ARE TO SHOW ALL DIMENSIONS, REINFORCEMENT, AND SHEET PILE PIECES FOR THE CONNECTION.

- S&WB FEEDER LINE NOT SHOWN FOR CLARITY. FOR DETAILS, SEE DWG. NOS. 15 & 16.
- BURN HOLES IN SHEET PILING TO PASS REINFORCEMENT SEE NOTE 1, DWG. 22.

VALUE ENGINEERING INCENTIVE CLAUSES — YOUR KEY TO HIGHER PROFITS

SYMBOL	DESCRIPTION	DATE	APPROVED
	REVISIONS		

U.S. ARMY ENGINEER DISTRICT, NEW ORLEANS
CORPS OF ENGINEERS
NEW ORLEANS, LOUISIANA

BOARD OF LEVEE COMMISSIONERS
ORLEANS LEVEE DISTRICT
NEW ORLEANS, LOUISIANA

MEYER ENGINEERS, LTD. METAIRIE, LOUISIANA
LAKE PONTCHARTRAIN, LA. AND VICINITY
HIGH LEVEL PLAN

LONDON AVE. OUTFALL CANAL, PARALLEL PROTECTION FLOODPROOFING OF MIRABEAU AVE. & FILMORE AVE. BRIDGES
ORLEANS PARISH, LOUISIANA

MIRABEAU AVENUE SEALED BRIDGE JOINT DETAILS

DESIGNED BY: JCS	DATE: 3-12-01	PLOT SCALE: 1"=1'	PLOT DATE: 6-27-01
DRAWN BY: MJF			
CHECKED BY: JCS	CADD FILE: 9362821		FILE NO. H-4-44674
SUBMITTED BY: MEYER ENGINEERS, LTD. DESIGN ENGINEER	SOLICITATION NO.: DACW29-01-B-0092		DWG 21 OF 97

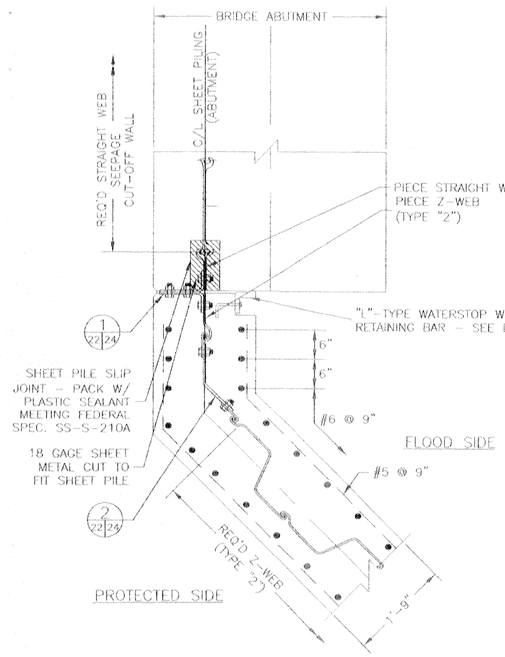

SECTION THROUGH SHEET PILE

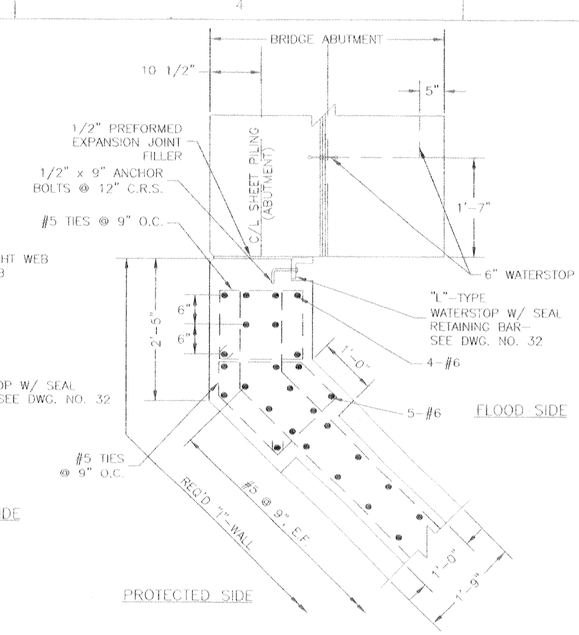

SECTION ABOVE SHEET PILE

DETAIL 7 20|22

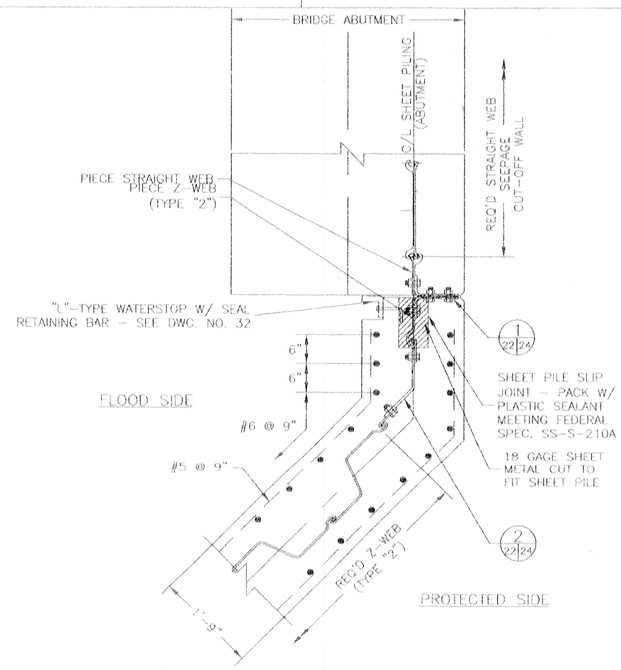

SECTION THROUGH SHEET PILE

DETAIL 8 20|22

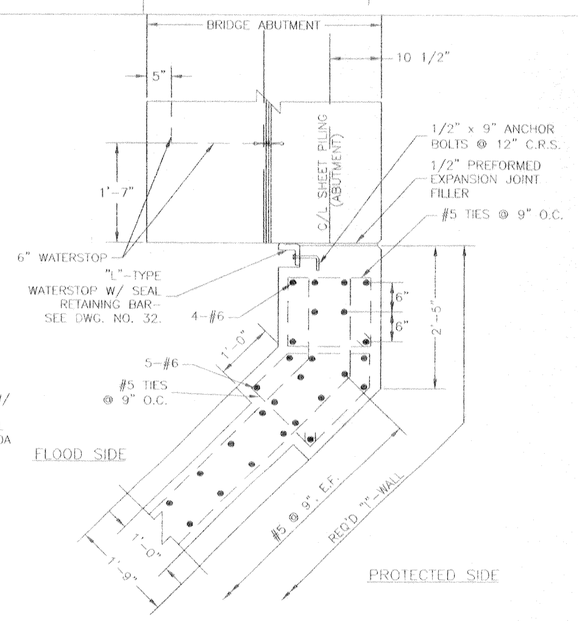

SECTION ABOVE SHEET PILE

PROTECTED SIDE

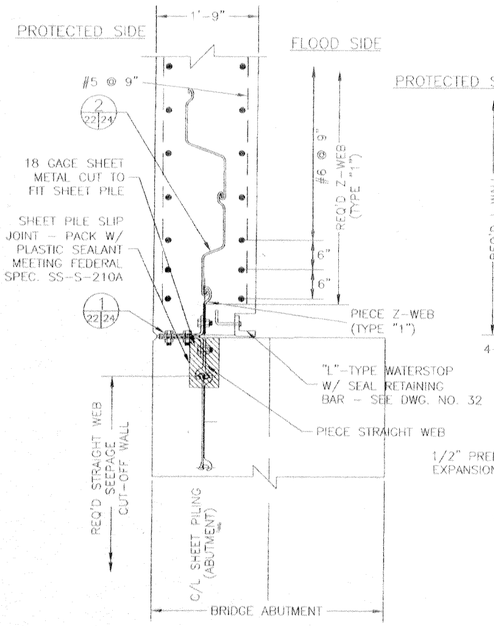

SECTION THROUGH SHEET PILE

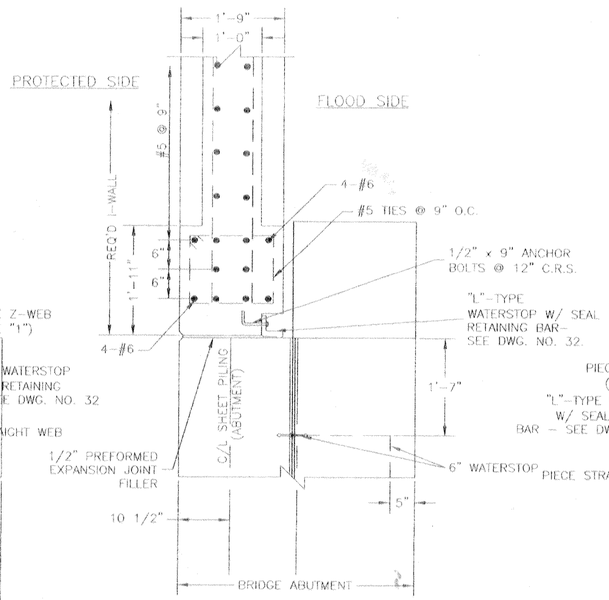

SECTION ABOVE SHEET PILE

DETAIL 5 20|22

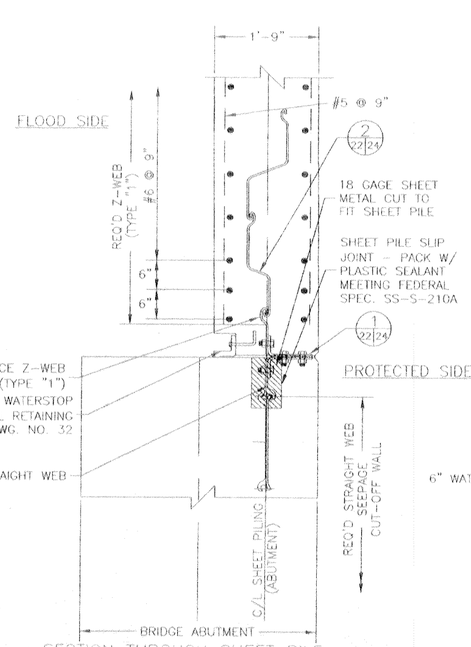

SECTION THROUGH SHEET PILE

DETAIL 6 20|22

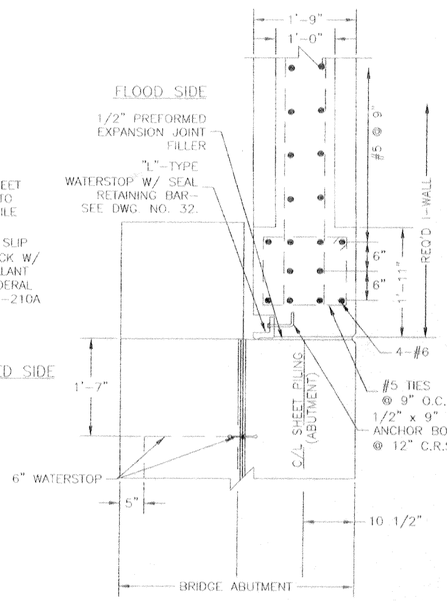

SECTION ABOVE SHEET PILE

SHEET PILE NOTES:

1. HOLES CUT IN STEEL SHEET PILING FOR PASSING REINFORCING BARS SHALL NOT EXCEED 2"ø. WHERE HOLES FALL WITHIN THE WEB OF THE STEEL SHEET PILE, THE HOLE SHALL BE SLOTTED 4" HORIZONTALLY TO ACCOMMODATE PASSING THE REINFORCING BARS.
2. ANY SUBSTITUTIONS SHALL BE SUBMITTED TO THE CONTRACTING OFFICER FOR APPROVAL.
3. STEEL SHEET PILE SURFACE PREPARATION AND PAINTING SHALL BE IN ACCORDANCE WITH SECTION 09940 OF THE SPECIFICATIONS.

REFERENCE DRAWINGS

FOR GENERAL NOTES, SEE DWG. NO. 4
FOR PLAN AND PROFILE, SEE DWG. NO. 7
FOR DETAILED FLOODWALL PLAN, SEE DWG. NO. 20

SCALE: 1" = 1'- 0"

12" 0 1' 2' 3' 4' 5'

SYMBOL	DESCRIPTION	DATE	APPROVED

REVISIONS

U.S. ARMY ENGINEER DISTRICT, NEW ORLEANS
CORPS OF ENGINEERS
NEW ORLEANS, LOUISIANA

BOARD OF LEVEE COMMISSIONERS
ORLEANS LEVEE DISTRICT
NEW ORLEANS, LOUISIANA

MEYER ENGINEERS, LTD. METAIRIE, LOUISIANA
LAKE PONTCHARTRAIN, LA. AND VICINITY

HIGH LEVEL PLAN

LONDON AVE. OUTFALL CANAL, PARALLEL PROTECTION FLOODPROOFING OF MIRABEAU AVE. & FILMORE AVE. BRIDGES
ORLEANS PARISH, LOUISIANA

MIRABEAU AVENUE SEALED BRIDGE JOINT DETAILS

DESIGNED BY: JCS	DATE: 3-12-01	PLOT SCALE: 1"=1'	PLOT DATE: 6-27-01
DRAWN BY: MJF	CADD FILE: 9362822		FILE NO. H-4-44674
CHECKED BY: JCS	SOLICITATION NO. DACW29-01-B-0092		DWG. 22 OF 97
SUBMITTED BY: MEYER ENGINEERS, LTD. DESIGN ENGINEER			

VALUE ENGINEERING INCENTIVE CLAUSES - YOUR KEY TO HIGHER PROFITS

Safety is a Part of Your Contract

C•A•D

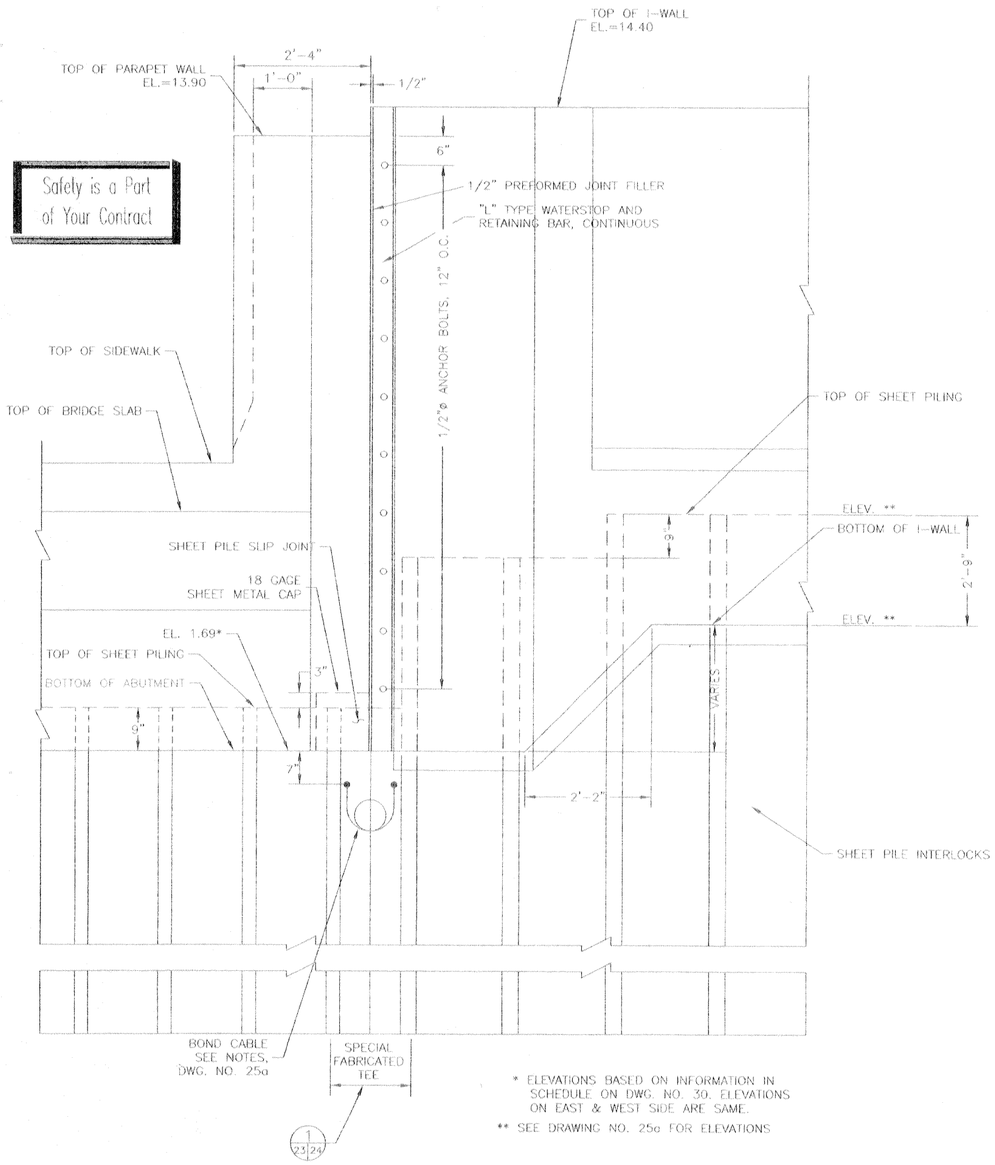

FLOOD SIDE ELEVATION
I-WALL TO ABUTMENT
(SOUTHEAST CORNER SHOWN, OTHERS SIMILAR)
SCALE: 1" = 1'-0"

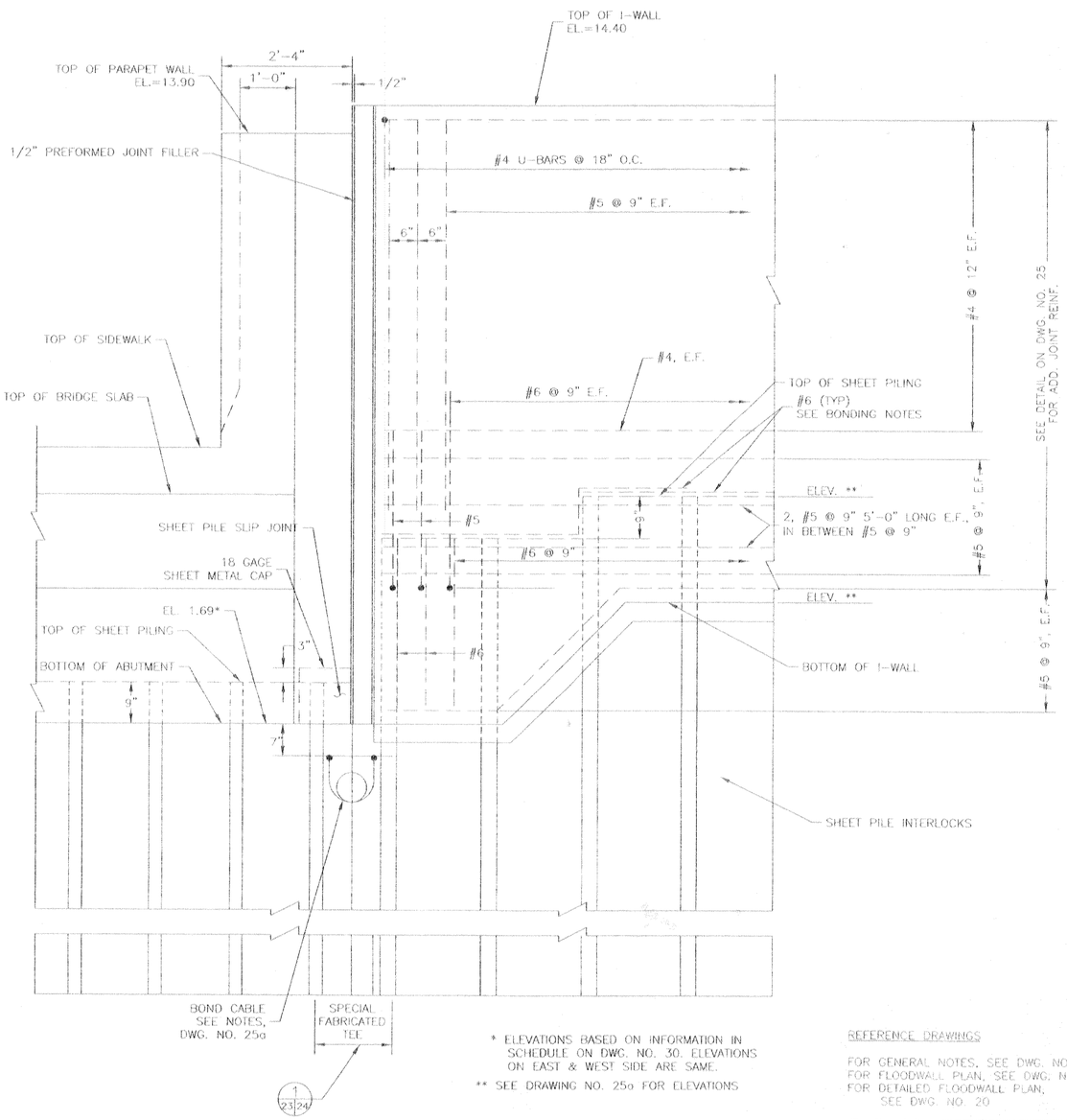

FLOOD SIDE ELEVATION
REINFORCEMENT
I-WALL TO ABUTMENT
(SOUTHEAST CORNER SHOWN, OTHERS SIMILAR)
SCALE: 1" = 1'-0"

Safety is a Part of Your Contract

NOTES:

ALL ELEVATIONS ARE 1964 EPOCH, UNLESS OTHERWISE NOTED.

SCALE: 1" = 1'-0"

12" 0 1' 2' 3' 4' 5'

REFERENCE DRAWINGS

FOR GENERAL NOTES, SEE DWG. NO. 4
FOR FLOODWALL PLAN, SEE DWG. NO. 18
FOR DETAILED FLOODWALL PLAN, SEE DWG. NO. 20

VALUE ENGINEERING — INCENTIVE CLAUSES — YOUR KEY TO HIGHER PROFITS

C•A•D

SYMBOL	DESCRIPTION	DATE	APPROVED
	REVISIONS		

U.S. ARMY ENGINEER DISTRICT, NEW ORLEANS
CORPS OF ENGINEERS
NEW ORLEANS, LOUISIANA

BOARD OF LEVEE COMMISSIONERS
ORLEANS LEVEE DISTRICT
NEW ORLEANS, LOUISIANA

MEYER ENGINEERS, LTD. METAIRIE, LOUISIANA
LAKE PONTCHARTRAIN, LA. AND VICINITY
HIGH LEVEL PLAN

LONDON AVE. OUTFALL CANAL, PARALLEL PROTECTION FLOODPROOFING OF MIRABEAU AVE. & FILMORE AVE. BRIDGES
ORLEANS PARISH, LOUISIANA

MIRABEAU AVENUE SEALED BRIDGE JOINT DETAILS

DESIGNED BY: JCS	DATE: 3-12-01	PLOT SCALE: 1"=1'	PLOT DATE: 6-27-01
DRAWN BY: MJF	CADD FILE: 936203		FILE NO. H-4-44674
CHECKED BY: JCS	SOLICITATION NO. DACW29-01-B-0092		DWG. 23 OF 97
SUBMITTED BY: MEYER ENGINEERS, LTD. DESIGN ENGINEER			

Safety is a Part of Your Contract

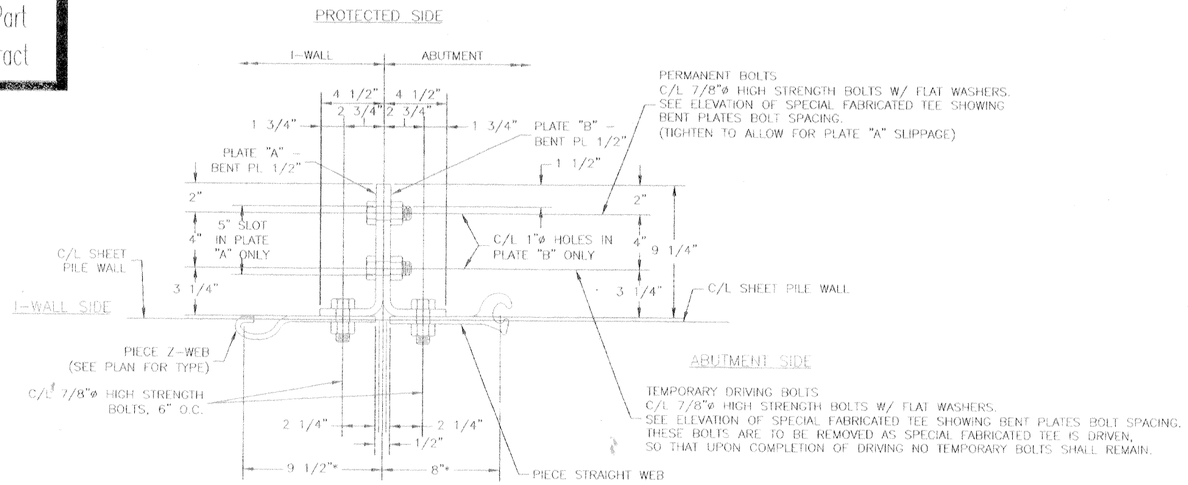

* DIMENSION VARIES WITH SHEET PILE MANUFACTURER. CONFIRM OR REVISE ON SHOP DRAWING SUBMITTAL AS REQ'D.

DETAIL 1/22|23|24

SPECIAL FABRICATED TEE
SCALE: 3" = 1'-0"

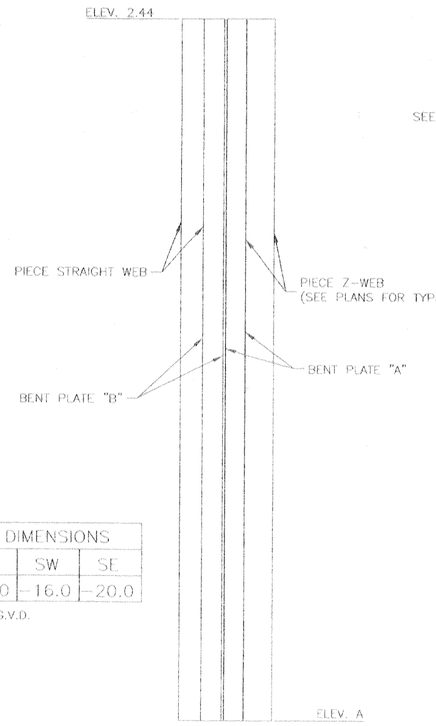

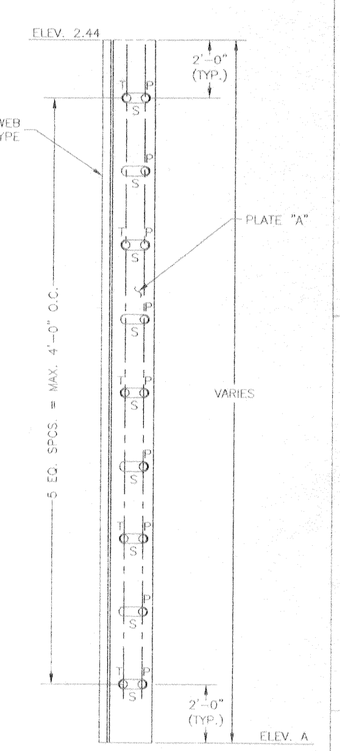

SHEETING DIMENSIONS				
	NW	NE	SW	SE
A*	-16.0	-16.0	-16.0	-20.0

*ELEVATIONS IN N.G.V.D.

LEGEND

P=PERMANENT BOLT
T=TEMPORARY BOLT
S=SLOTTED HOLE (PLATE "A" ONLY)

NOTE:
TEMPORARY BOLTS ALTERNATE EACH SLOT

PROTECTED SIDE ELEVATION

I-WALL SIDE ELEVATION

ELEVATION OF SPECIAL FABRICATED TEE SHOWING BENT PLATES BOLT SPACING
SCALE: HORIZ. 1" = 1'-0"
VERT. 1/2" = 1'-0"

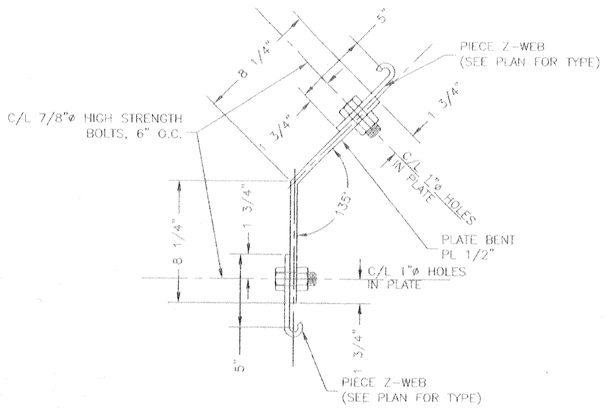

VALUE ENGINEERING INCENTIVE CLAUSES — YOUR KEY TO HIGHER PROFITS

DETAIL 2/22|24

SPECIAL FABRICATED CORNER
(NORTHWEST, SOUTHWEST, SOUTHEAST CORNERS)
SCALE: 3" = 1'-0"

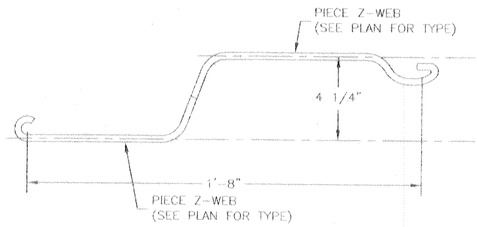

DETAIL 3/22|24

SPECIAL FABRICATED Z-WEB
(NORTHEAST CORNER)
SCALE: 3" = 1'-0"

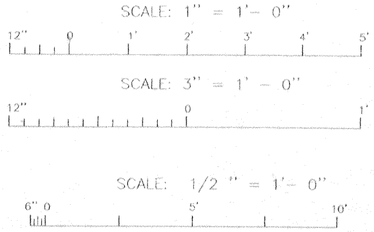

REFERENCE DRAWINGS

FOR GENERAL NOTES, SEE DWG. NO. 4
FOR FLOODWALL PLAN, SEE DWG. NO. 18a
FOR FLOODWALL PROFILES, SEE DWG. NO. 19
FOR DETAILED FLOODWALL PLAN, SEE DWG. NO. 20

SYMBOL	DESCRIPTION	DATE	APPROVED
	REVISIONS		

U.S. ARMY ENGINEER DISTRICT, NEW ORLEANS
CORPS OF ENGINEERS
NEW ORLEANS, LOUISIANA

BOARD OF LEVEE COMMISSIONERS
ORLEANS LEVEE DISTRICT
NEW ORLEANS, LOUISIANA

MEYER ENGINEERS, LTD. METAIRIE, LOUISIANA
LAKE PONTCHARTRAIN, LA. AND VICINITY
HIGH LEVEL PLAN
LONDON AVE. OUTFALL CANAL, PARALLEL PROTECTION FLOODPROOFING OF MIRABEAU AVE. & FILMORE AVE. BRIDGES
ORLEANS PARISH, LOUISIANA

MIRABEAU AVENUE SEALED BRIDGE SHEET PILE DETAILS

DESIGNED BY: JCS	DATE: 3-12-01	PLOT SCALE: 1"=1'	PLOT DATE: 6-27-01
DRAWN BY: MJF			
CHECKED BY: JCS	CADD FILE: 9362824		FILE NO. H-4-44674
SUBMITTED BY: MEYER ENGINEERS, LTD. DESIGN ENGINEER	SOLICITATION NO. DACW29-01-B-0092		DWG. 24 OF 97

Safety is a Part of Your Contract

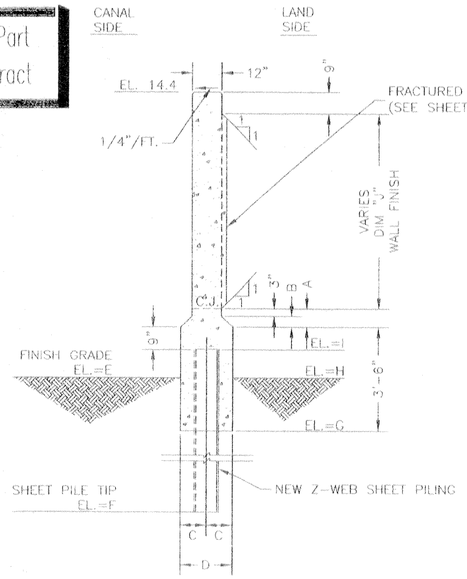

TYPICAL I-WALL DIMENSIONS

SCALE: 1"=1'-0"

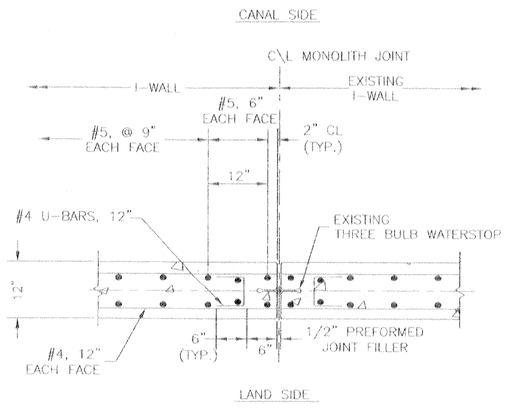

TYPICAL REINFORCEMENT AT MONOLITH JOINTS

SCALE: 1/2"=1'-0"

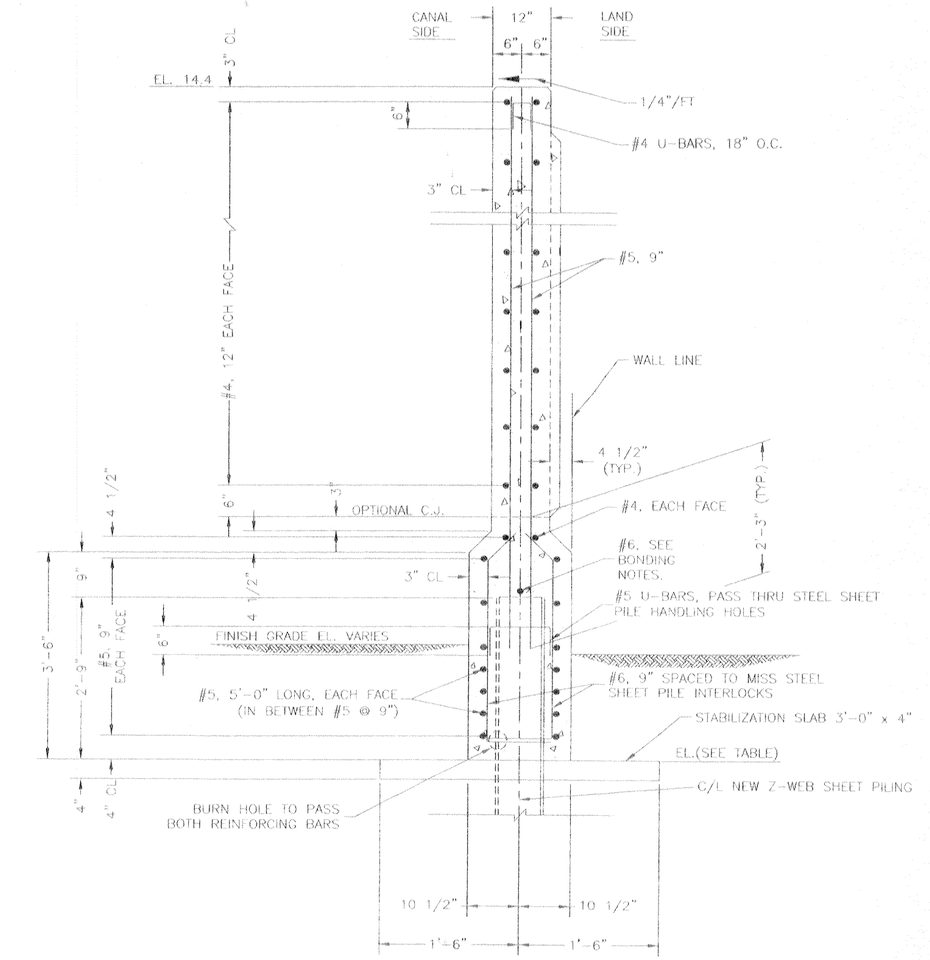

TYPICAL I-WALL SECTION

SCALE: 1/2"=1'-0"

CONCRETE I-WALL DIMENSIONS				
	MIRABEAU			
	NW	NE	SW	SE
A	7 1/2"	7 1/2"	7 1/2"	7 1/2"
B	4 1/2"	4 1/2"	4 1/2"	4 1/2"
C	10 1/2"	10 1/2"	10 1/2"	10 1/2"
D	1'-9"	1'-9"	1'-9"	1'-9"
E *	5.0	5.0	5.5	5.5
F *	-16.0	-16.0	-16.0	-20.0
G *	3.0	3.0	3.5	3.5
H *	5.0	5.0	5.5	5.5
I *	5.75	5.75	6.25	6.25
J	6'-6 5/16"	6'-6 3/8"	6'-0 1/4"	6'-0 1/4"
TYPE OF SHEETING **	TYPE "1"	TYPE "1"	TYPE "2"	TYPE "2"

* ELEVATIONS IN N.G.V.D.
** SEE SPECIFICATIONS FOR TYPE OF SHEET PILE

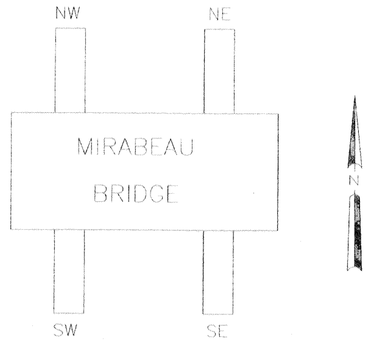

KEY PLAN

N.T.S.

BONDING NOTES:

#6 REINFORCING BAR TO BE WELDED TO THE TOP OF EACH STEEL SHEET PILE. #6 REINFORCING BAR SHALL NOT EXTEND ACROSS THE MONOLITH JOINT. INSTALL BOND CABLE AT ALL I-WALL JOINTS.

BOND CABLES SHALL HAVE AN 8" DIAMETER LOOP TO ALLOW FOR STRESSES. BOND CABLES SHALL BE WELDED AS SPECIFIED TO ADJACENT STEEL PILES 7" BELOW BOTTOM OF CONCRETE CAP FOR I-WALL JOINTS.

WELDED CONNECTIONS SHALL BE COATED WITH SPLICING EPOXY TO OBTAIN MOISTURE PROOF JOINT.
SEE SPECIFICATIONS.

#6 REINFORCING BARS SHALL BE WELDED TO THE LAST THREE SHEET PILINGS AT EACH END OF THE MONOLITH AS SHOWN FOR CONTINUITY.

SPLICING OF #6 REINFORCING BAR WILL NOT BE ALLOWED, EXCEPT AT THE ENDS OF I-WALL MONOLITHS AS SHOWN.

SCALE: 1" = 1'

1' 6" 0 1' 2' 3' 4' 5'

SCALE: 1/2" = 1'

2' 1' 0 2' 4' 6' 8' 10'

SYMBOL	DESCRIPTION	DATE	APPROVED
REVISIONS			

U.S. ARMY ENGINEER DISTRICT, NEW ORLEANS
CORPS OF ENGINEERS
NEW ORLEANS, LOUISIANA

BOARD OF LEVEE COMMISSIONERS
ORLEANS LEVEE DISTRICT
NEW ORLEANS, LOUISIANA

MEYER ENGINEERS, LTD. METAIRIE, LOUISIANA

LAKE PONTCHARTRAIN, LA. AND VICINITY
HIGH LEVEL PLAN

LONDON AVE. OUTFALL CANAL, PARALLEL PROTECTION FLOODPROOFING OF
MIRABEAU AVE. & FILMORE AVE. BRIDGES
ORLEANS PARISH, LOUISIANA

MIRABEAU AVENUE SEALED BRIDGE I-WALL REINFORCING & DETAILS

DESIGNED BY: JCS	DATE: 3-12-01	PLOT SCALE: 1"=2'	PLOT DATE: 6-27-01
DRAWN BY: BMS			
CHECKED BY: JCS	CADD FILE: 9362025a		FILE NO. H-4-44674
SUBMITTED BY: MEYER ENGINEERS, LTD. DESIGN ENGINEER	SOLICITATION NO. DACW29-01-B-0092		DWG. 25a OF 97

VALUE ENGINEERING INCENTIVE CLAUSES — YOUR KEY TO HIGHER PROFITS

C•A•D

Safety is a Part of Your Contract

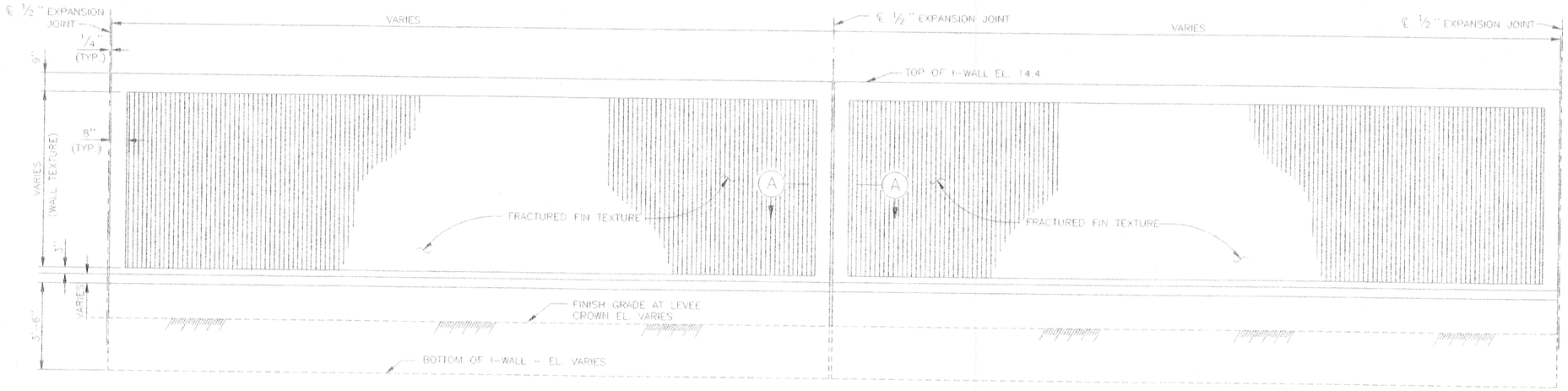

TYPICAL I-WALL
LAND SIDE TEXTURE FINISH
SCALE: ½" = 1'- 0"

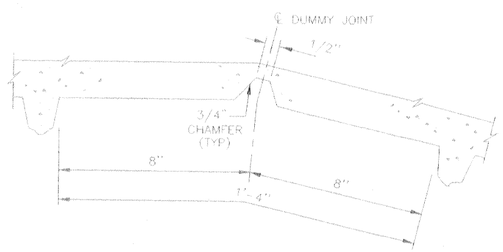

SPECIAL TEXTURE AT P.I.
SCALE: 6" = 1" - 0"

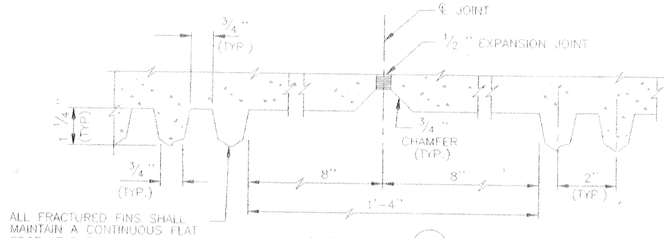

SECTION (A)

TYPICAL TEXTURE AT EXPANSION JOINTS
SCALE: 6" = 1' - 0"

NOTES:

1. FOR GENERAL NOTES, SEE DWG. 2.
2. FOR CONCRETE NOTES, SEE DWG. 2.
3. ALL FORM TIE BOLTS SHALL BE PLACED IN THE VALLEY OF THE FRACTURED FIN TEXTURE (i.e., BETWEEN ADJACENT FINS).
4. CONTRACTOR SHALL MAKE ALL EFFORTS TO MINIMIZE THE OCCURRENCE OF BUTT JOINTS. CONTRACTOR SHALL SUBMIT, FOR PRIOR APPROVAL, DRAWINGS SHOWING THE LOCATION OF ALL BUTT JOINTS IN FORMS USED FOR CONSTRUCTION.

VALUE INCENTIVE PROPOSALS ENGINEER — YOUR KEY TO HIGHER PROFITS

SCALE: ½" = 1'- 0"
12" 0 2' 4' 6' 8'

SCALE: ¾" = 1'- 0"
12" 0 1' 2' 3' 4' 5'

SCALE: 6" = 1' - 0"
6" 3" 0

C-A-D

SYMBOL	DESCRIPTION	DATE	APPROVED
	REVISIONS		

U.S. ARMY ENGINEER DISTRICT, NEW ORLEANS
CORPS OF ENGINEERS
NEW ORLEANS, LOUISIANA

BOARD OF LEVEE COMMISSIONERS
ORLEANS LEVEE DISTRICT
NEW ORLEANS, LOUISIANA

MEYER ENGINEERS, LTD. METAIRIE, LOUISIANA
LAKE PONTCHARTRAIN, LA. AND VICINITY

HIGH LEVEL PLAN

LONDON AVE. OUTFALL CANAL, PARALLEL PROTECTION FLOODPROOFING OF MIRABEAU AVE. & FILMORE AVE. BRIDGE
ORLEANS PARISH, LOUISIANA

ARCHITECTURAL FINISH

DESIGNED BY: JCS	DATE: 3-12-01	PLOT SCALE: 1"=4'	PLOT DATE: 6-27-01
DRAWN BY: BMS			
CHECKED BY: JCS	CADD FILE: 9362b25b		FILE NO. H-4-44674
SUBMITTED BY: MEYER ENGINEERS, LTD. DESIGN ENGINEER	SOLICITATION NO. DACW29-01-B-0092		DWG. 25b OF 97

Safety is a Part of Your Contract

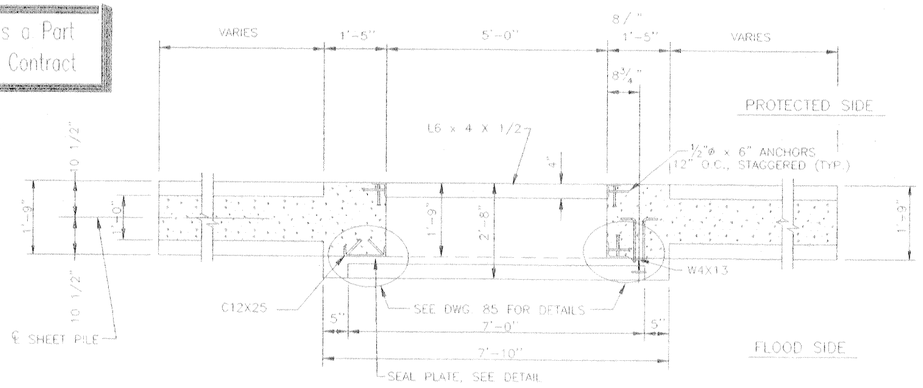

NOTE:
GATE NOT SHOWN FOR CLARITY.

PLAN

SCALE: 3/4" = 1'- 0"

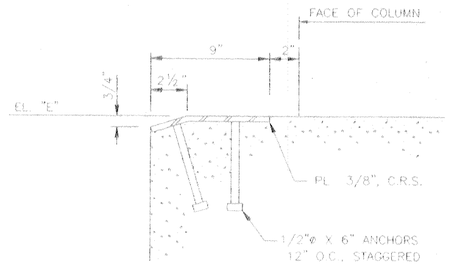

SEAL PLATE DETAIL

SCALE: 3" = 1'-0"

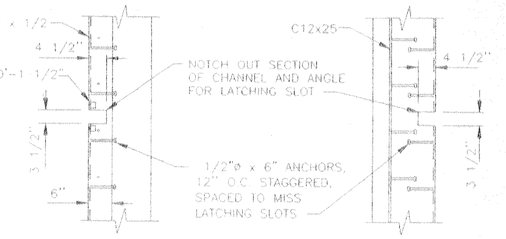

PROTECTED SIDE ELEVATION FLOOD SIDE ELEVATION

TYPICAL DETAIL AT LATCHING SLOTS

SCALE: 3/4" = 1'- 0"

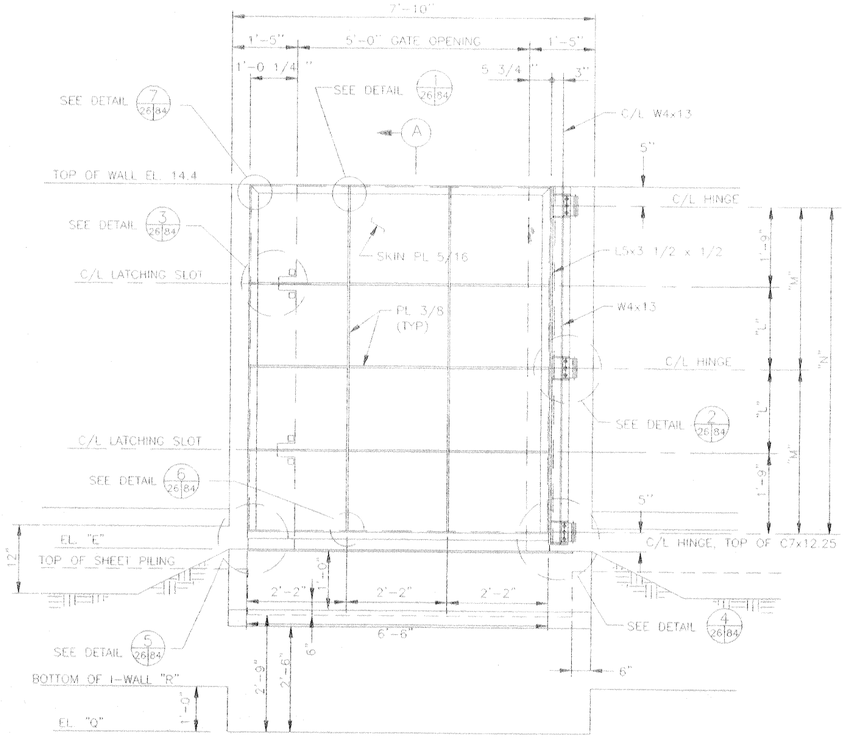

FLOOD SIDE ELEVATION

SCALE: 3/4" = 1'- 0"

GATES	SCHEDULE OF ELEVATIONS								
	E	F	L	M	N	O	P	Q	R
1(NW)	6.00	-16.0	2'-0 3/8"	3'-9 3/8"	7'-6 3/4"	3'-9 1/4"	2'-0 3/8"	2.0	3.0
2(NE)	6.00	-16.0	2'-0 3/8"	3'-9 3/8"	7'-6 3/4"	3'-9 1/4"	2'-0 3/8"	2.0	3.0
3(SW)	6.50	-16.0	1'-9 3/8"	3'-6 3/8"	7'-0 3/4"	3'-3 1/4"	1'-9 3/8"	2.5	3.5
4(SE)	6.50	-20.0	1'-9 3/8"	3'-6 3/8"	7'-0 3/4"	3'-3 1/4"	1'-9 3/8"	2.5	3.5

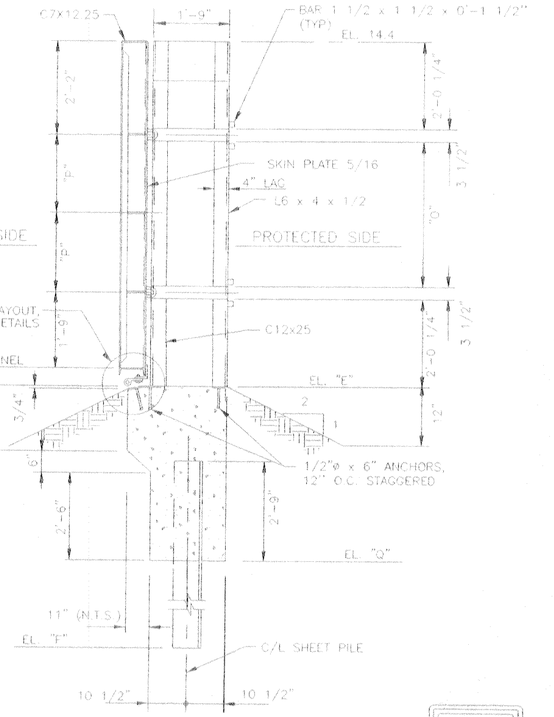

SECTION (A)

SCALE: 3/4" = 1'- 0"

SCALE: 3/4" = 1'- 0"

12" 0 1' 2' 3' 4' 5'

SCALE: 3" = 1'- 0"

12" 0 1'

REFERENCE DRAWINGS:
FOR GENERAL NOTES, SEE DWG. 4
FOR TYPICAL WALL JOINTS, SEE DWGS. 21-24
FOR GATE MONOLITH REINFORCING, SEE DWG. 27
FOR SEAL DETAILS, SEE DWG. 85.

VALUE ENGINEERING INCENTIVE CLAUSES — YOUR KEY TO HIGHER PROFITS

SYMBOL	DESCRIPTION	DATE	APPROVED
	REVISIONS		

U.S. ARMY ENGINEER DISTRICT, NEW ORLEANS
CORPS OF ENGINEERS
NEW ORLEANS, LOUISIANA

BOARD OF LEVEE COMMISSIONERS
ORLEANS LEVEE DISTRICT
NEW ORLEANS, LOUISIANA

MEYER ENGINEERS, LTD. METAIRIE, LOUISIANA

LAKE PONTCHARTRAIN, LA. AND VICINITY
HIGH LEVEL PLAN

LONDON AVE. OUTFALL CANAL, PARALLEL PROTECTION FLOODPROOFING OF MIRABEAU AVE. & FILMORE AVE. BRIDGES
ORLEANS PARISH, LOUISIANA

MIRABEAU AVENUE SEALED BRIDGE PEDESTRIAN GATE DETAILS-1

DESIGNED BY: JCS	DATE: 3-12-01	PLOT SCALE: 1"=2'	PLOT DATE: 6-27-01
DRAWN BY: MJF	CADD FILE: 926226		FILE NO. H-4-44674
CHECKED BY: JCS	SOLICITATION NO. DACW29-01-B-0092		DWG. 26 OF 97
SUBMITTED BY: MEYER ENGINEERS, LTD. DESIGN ENGINEER			

Safety is a Part of Your Contract

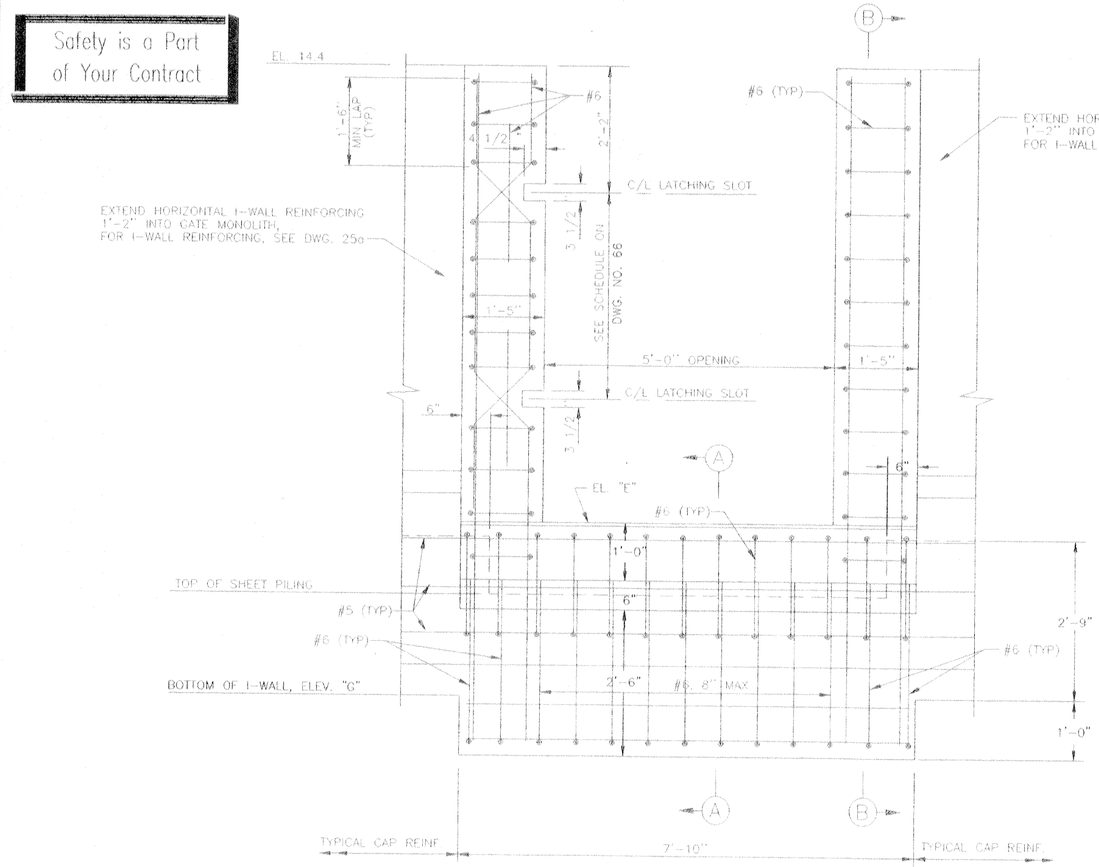

FLOOD SIDE ELEVATION

SCALE: 1" = 1'- 0"

SECTION (A)

SCALE: 1" = 1'- 0"

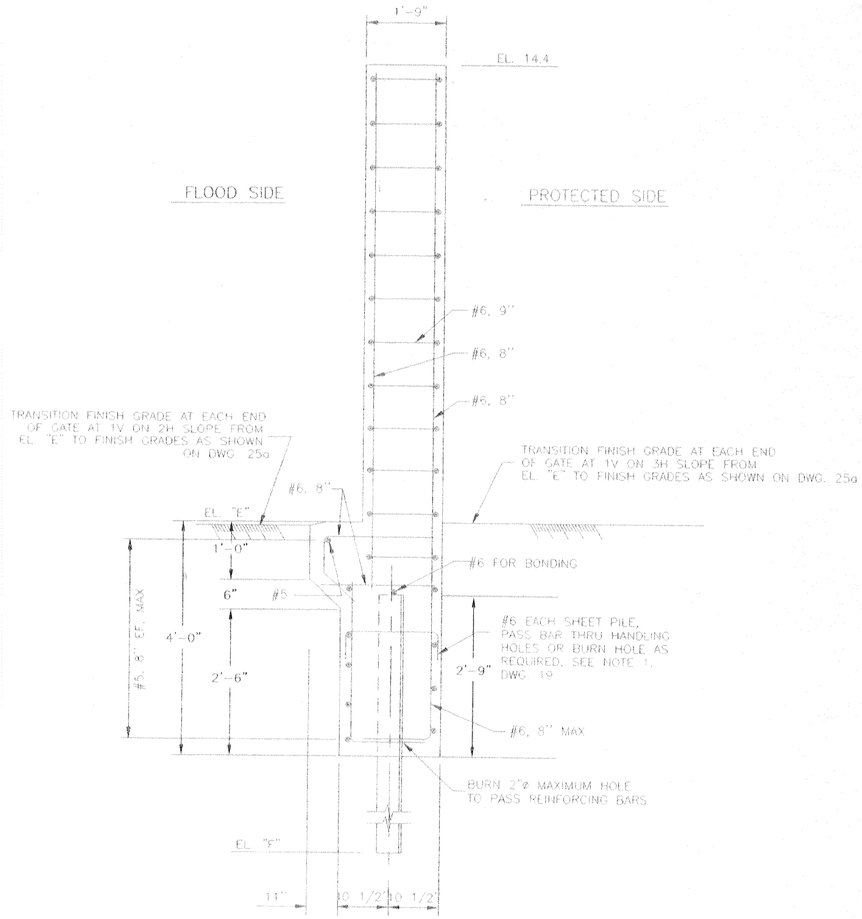

SECTION (B)

SCALE: 1" = 1'- 0"

REFERENCE DRAWINGS

FOR GENERAL NOTES, SEE DWG. 4.
FOR I-WALL REINFORCING, SEE DWG. 25a
FOR GATE MONOLITH MASONRY, SEE DWG. 27.
FOR GATE LATCHING DETAILS, SEE DWG. 86.

GATES	SCHEDULE OF ELEVATIONS		
	E	F	G
1(NW)	6.00	-16.0	3.00
2(NE)	6.00	-16.0	3.00
3(SW)	6.50	-16.0	3.50
4(SE)	6.50	-20.0	3.50

SCALE: 1" = 1'- 0"

12" 0 1' 2' 3' 4' 5'

VALUE ENGINEERING
INCENTIVE CLAUSES
YOUR KEY TO HIGHER PROFITS

SYMBOL	DESCRIPTION	DATE	APPROVED
	REVISIONS		

U.S. ARMY ENGINEER DISTRICT, NEW ORLEANS
CORPS OF ENGINEERS
NEW ORLEANS, LOUISIANA

BOARD OF LEVEE COMMISSIONERS
ORLEANS LEVEE DISTRICT
NEW ORLEANS, LOUISIANA

MEYER ENGINEERS, LTD. METAIRIE, LOUISIANA
LAKE PONTCHARTRAIN, LA. AND VICINITY

HIGH LEVEL PLAN

LONDON AVE. OUTFALL CANAL, PARALLEL PROTECTION FLOODPROOFING OF MIRABEAU AVE. & FILMORE AVE. BRIDGES
ORLEANS PARISH, LOUISIANA

MIRABEAU AVENUE SEALED BRIDGE PEDESTRIAN GATE DETAILS - 2

DESIGNED BY: JCS	DATE: 3-12-01	PLOT SCALE: 1"=1'	PLOT DATE: 6-27-01
DRAWN BY: MJF			
CHECKED BY: JCS	CADD FILE: 936227		FILE NO. H-4-44674
SUBMITTED BY: MEYER ENGINEERS, LTD. DESIGN ENGINEER	SOLICITATION NO. DACW29-01-B-0092		DWG. 27 OF 97

Safety is a Part of Your Contract

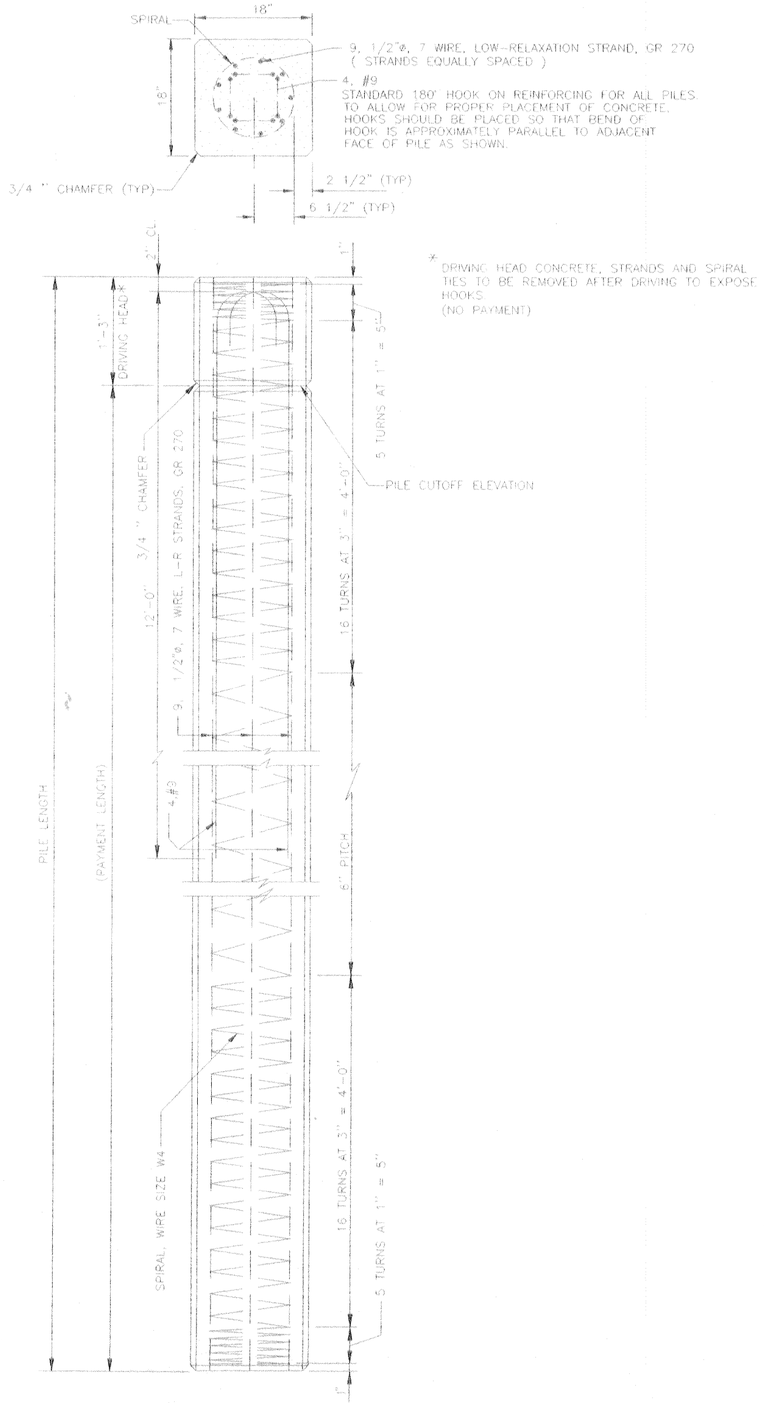

* DRIVING HEAD CONCRETE, STRANDS AND SPIRAL TIES TO BE REMOVED AFTER DRIVING TO EXPOSE HOOKS.
(NO PAYMENT)

NOTE:
GRIND PRESTRESSED STRANDS FLUSH WITH PILE HEAD AND PILE TIP.

18" X 18" PRESTRESSED PRECAST CONCRETE PILE

2 POINT PICKUP (L< 90') 18" X 18" PILE

NOTE: PICKUP POINTS TO BE PLAINLY MARKED ON PILES

PILE SCHEDULE

BFM B/L STATIONS	PILE SIZE	NUMBER OF PILES	PILE LENGTH	PILE BATTER
19+97 (BENT ②)	18" x 18"	10	80'-3"	VERTICAL
		2	80'-3"	12V ON 1H
20+17 (BENT ③)	18" x 18"	10	80'-3"	VERTICAL
		2	80'-3"	12V ON 1H
20+47 (BENT ④)	18" x 18"	10	80'-3"	VERTICAL
		2	80'-3"	12V ON 1H
20+77 (BENT ⑤)	18" x 18"	10	80'-3"	VERTICAL
		2	80'-3"	12V ON 1H
20+97 (BENT ⑥)	18" x 18"	10	80'-3"	VERTICAL
		2	80'-3"	12V ON 1H

NOTES:

1. PILES SHALL BE DRIVEN TO ACHIEVE REQUIRED EMBEDMENT IN PILE CAPS AND TO THE TOLERANCES SPECIFIED IN SECTION 02365 OF THE SPECIFICATIONS.
2. L.R. DENOTES LOW RELAXATION
3. PILE LENGTHS ARE SHOWN FOR ESTIMATING PURPOSES (WITH FACTOR OF SAFETY=2) PILE LOAD TEST SHALL BE PERFORMED PRIOR TO ORDERING PILES. SERVICE LOAD = 30 TONS

REFERENCE DRAWINGS:

FOR GENERAL NOTES, SEE DWG. NO. 4
FOR PLAN/PROFILE, SEE DWG. NO. 7
FOR ABUTMENT PLAN & ELEVATIONS, SEE DWG. NO. 30

SCALE: 1 1/2 " = 1' - 0"

12" 0 1' 2' 3'

VALUE ENGINEERING ○ INCENTIVE CLAUSES ○ YOUR KEY TO HIGHER PROFITS

SYMBOL	DESCRIPTION	DATE	APPROVED
	REVISIONS		

U.S. ARMY ENGINEER DISTRICT, NEW ORLEANS
CORPS OF ENGINEERS
NEW ORLEANS, LOUISIANA

BOARD OF LEVEE COMMISSIONERS
ORLEANS LEVEE DISTRICT
NEW ORLEANS, LOUISIANA

MEYER ENGINEERS, LTD. METAIRIE, LOUISIANA
LAKE PONTCHARTRAIN, LA. AND VICINITY
HIGH LEVEL PLAN

LONDON AVE. OUTFALL CANAL, PARALLEL PROTECTION FLOODPROOFING OF MIRABEAU AVE. & FILMORE AVE. BRIDGES
ORLEANS PARISH, LOUISIANA

MIRABEAU AVENUE SEALED BRIDGE PRESTRESSED CONCRETE PILES

DESIGNED BY: JCS	DATE: 3-12-01	PLOT SCALE: 1"=1'	PLOT DATE: 6-27-01
DRAWN BY: MJF			
CHECKED BY: JCS	CADD FILE: 9302608		FILE NO. H-4-44674
SUBMITTED BY: MEYER ENGINEERS, LTD. DESIGN ENGINEER	SOLICITATION NO. DACW29-01-B-0092		DWG. 28 OF 97

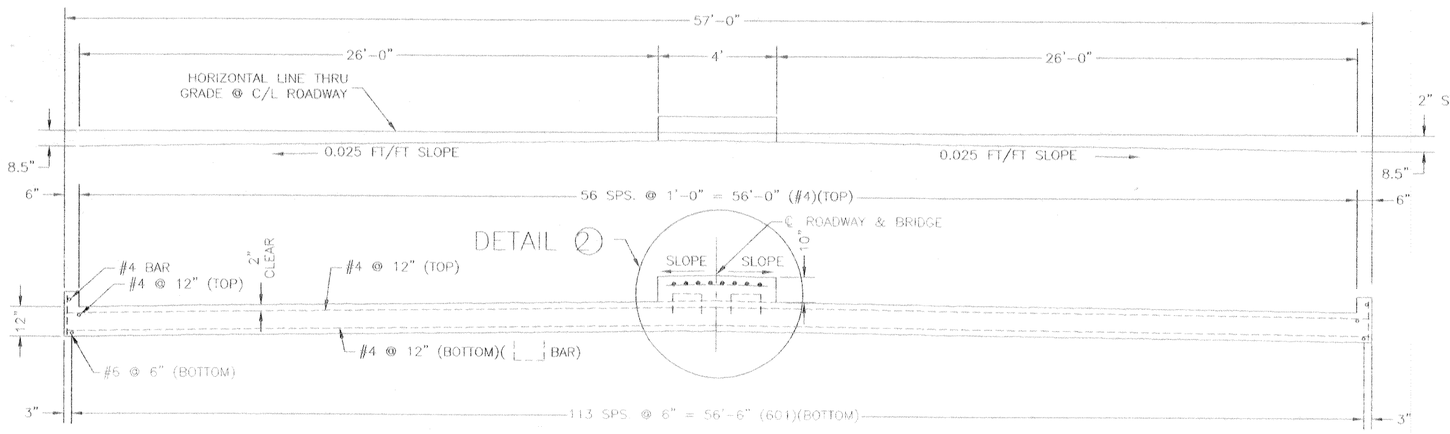

SECTION (A)

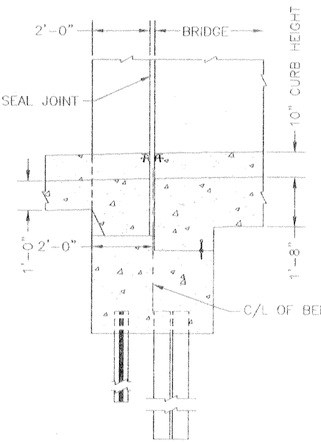

DETAIL (1)

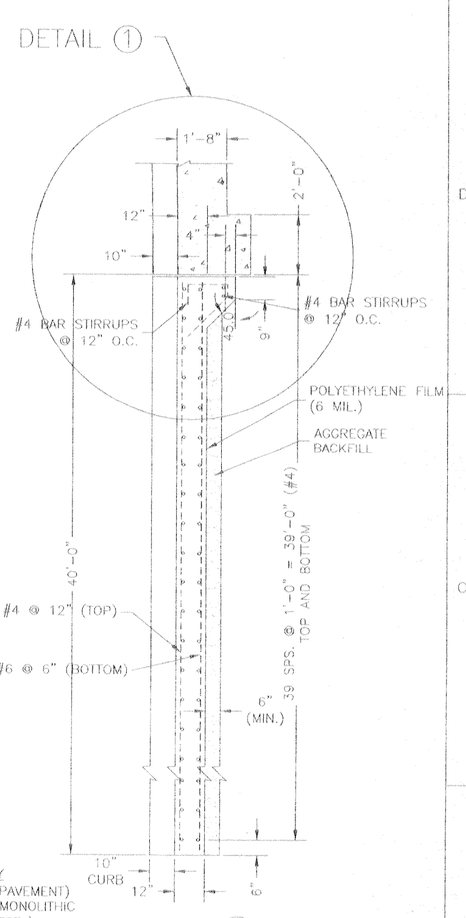

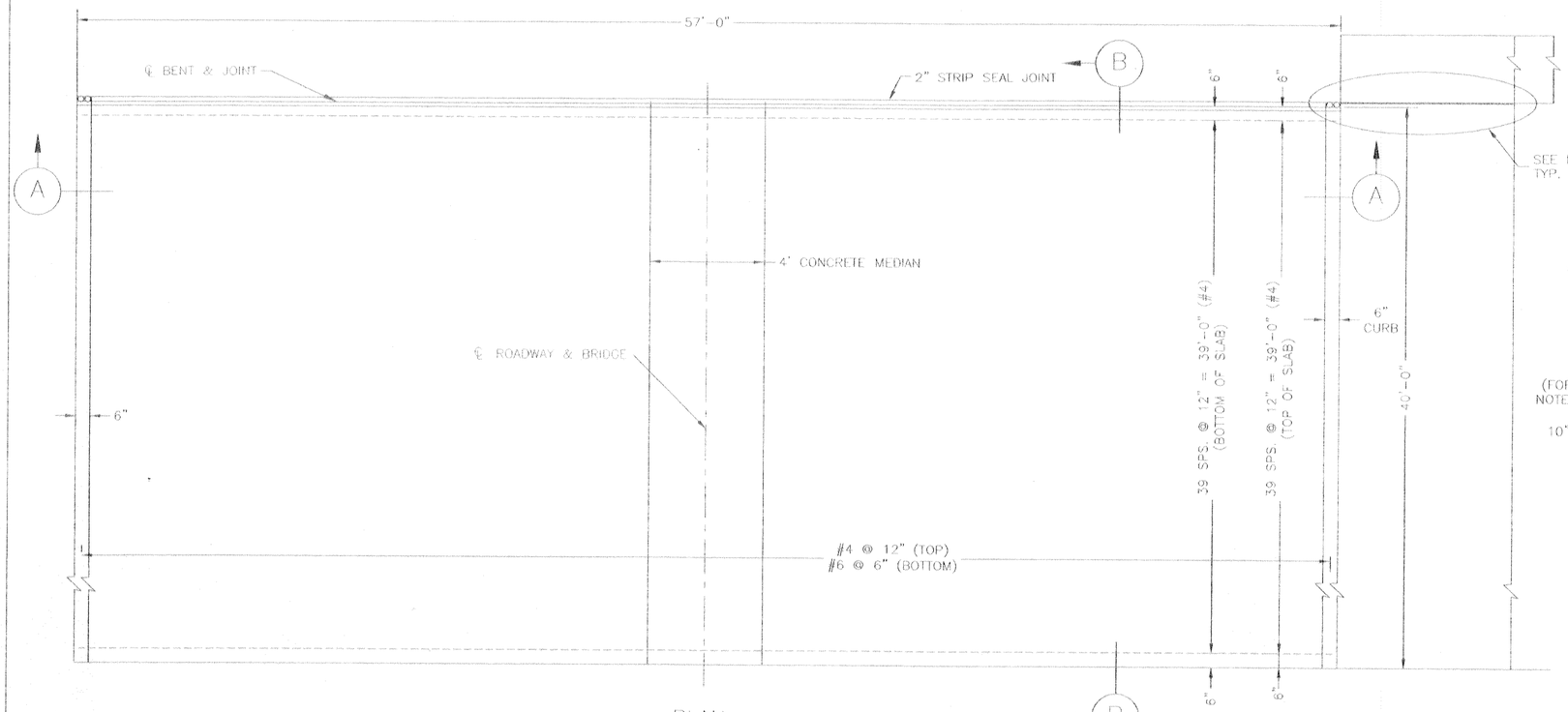

PLAN

SECTION (B)

SECTION ALONG ℄ ROADWAY
(FOR PORTLAND CEMENT CONCRETE PAVEMENT)
NOTE: CURB SHOWN TO BE POURED MONOLITHIC WITH SLAB (NO REINFORCING STEEL)
10" CONC. MEDIAN NOT SHOWN FOR CLARITY

APPROACH SLAB NOTES:

1. THE APPROACH SLAB SHALL BE CONSTRUCTED IN ACCORDANCE WITH THESE DRAWINGS AND SPECIFICATION SECTION 02550 "APPROACH SLAB"
2. STRUCTURAL CONCRETE: ALL CONCRETE SHALL HAVE A 3/4" CHAMFER UNLESS OTHERWISE NOTED.
3. REINFORCING STEEL: ALL REINFORCING STEEL SHALL BE GRADE 60. DIMENSIONS RELATING TO FABRICATION ARE OUT-TO-OUT OF BARS, UNLESS OTHERWISE NOTED. DIMENSIONS RELATING TO SPACING ARE TO BAR CENTERS, UNLESS OTHERWISE NOTED.

SCALE: 1/2" = 1'-0"

2' 1' 0 2' 4' 6' 8' 10'

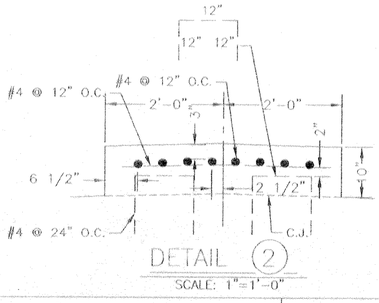

DETAIL (2)
SCALE: 1"=1'-0"

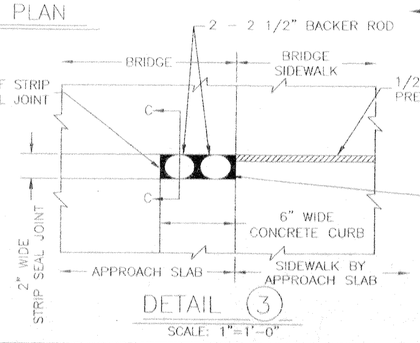

DETAIL (3)
SCALE: 1"=1'-0"

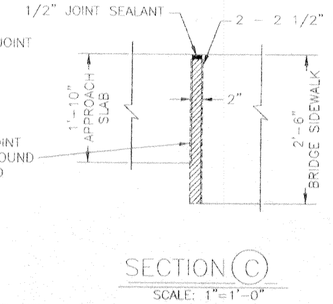

SECTION (C)
SCALE: 1"=1'-0"

Safety is a Part of Your Contract

SYMBOL	DESCRIPTION	DATE	APPROVED
	REVISIONS		

U.S. ARMY ENGINEER DISTRICT, NEW ORLEANS
CORPS OF ENGINEERS
NEW ORLEANS, LOUISIANA

BOARD OF LEVEE COMMISSIONERS
ORLEANS LEVEE DISTRICT
NEW ORLEANS, LOUISIANA

MEYER ENGINEERS, LTD. METAIRIE, LOUISIANA
LAKE PONTCHARTRAIN, LA. AND VICINITY
HIGH LEVEL PLAN

LONDON AVE. OUTFALL CANAL, PARALLEL PROTECTION FLOODPROOFING OF MIRABEAU AVE. & FILMORE AVE. BRIDGES
ORLEANS PARISH, LOUISIANA

MIRABEAU AVENUE SEALED BRIDGE APPROACH SLAB

DESIGNED BY: JCS	DATE: 3-12-01	PLOT SCALE: 1"=2'	PLOT DATE: 6-27-01
DRAWN BY: BMS			
CHECKED BY: JCS	CADD FILE: 9362B29		FILE NO. H-4-44674
SUBMITTED BY: MEYER ENGINEERS, LTD. DESIGN ENGINEER	SOLICITATION NO. DACW29-01-B-0092		DWG. 29 OF 97

Safety is a Part of Your Contract

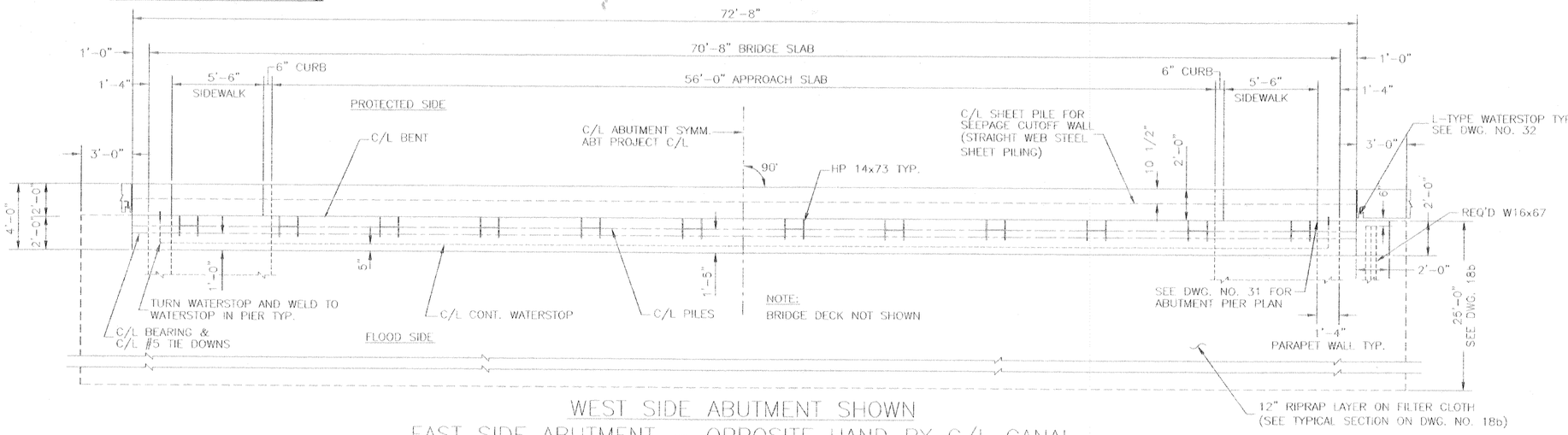

WEST SIDE ABUTMENT SHOWN
EAST SIDE ABUTMENT – OPPOSITE HAND BY C/L CANAL
PLAN
SCALE: 1"=3'

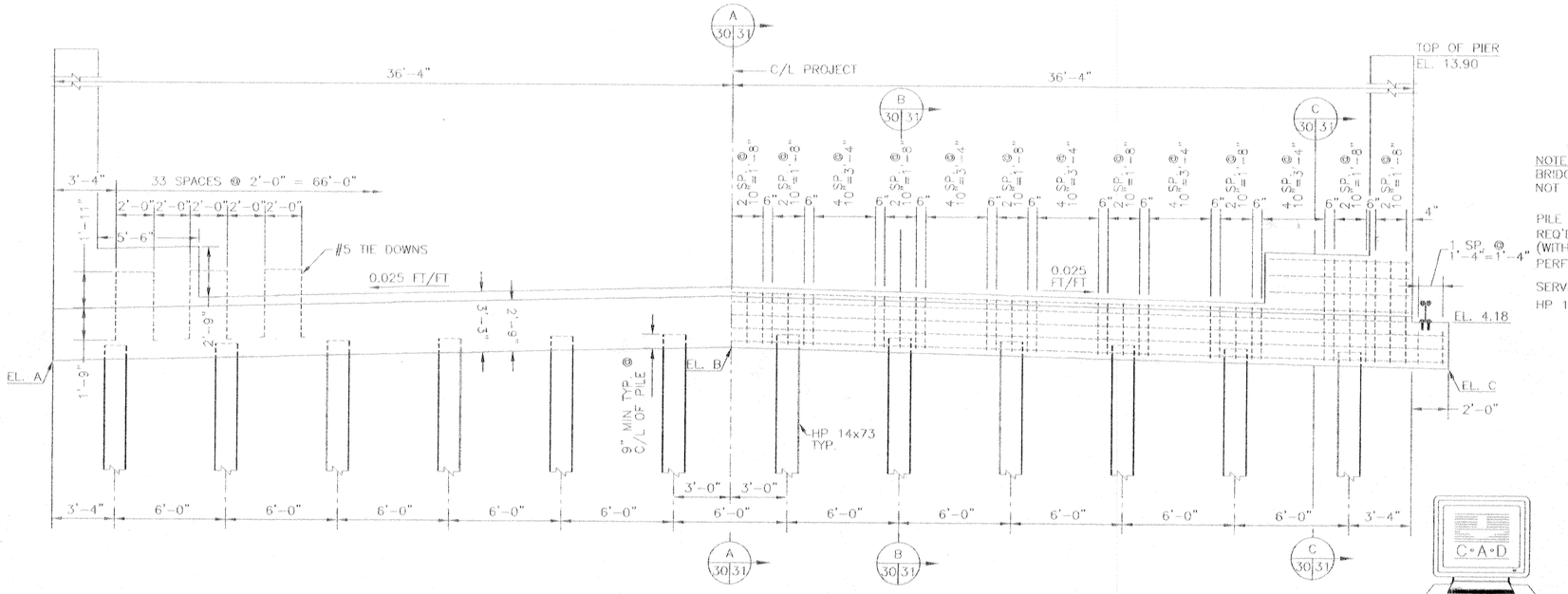

ELEVATION
SCALE: 1"=3'

ABUTMENT	C/L BRG. BFM B/L STATION	ELEV. A	ELEV. B	ELEV. C
WEST ①	19+77	1.69	2.59	1.68
EAST ②	21+17	1.69	2.59	1.68

REFERENCE DRAWINGS
FOR GENERAL NOTES, SEE DWG. NO. 4
FOR BENT LOCATIONS, SEE DWG. NO. 7
FOR STRUCTURE PLAN AND ELEVATION, SEE DWG. NO. 17

NOTE:
BRIDGE DECK AND SHEET PILE NOT SHOWN IN ELEVATION.

PILE LENGTH = ±79.50 FT.
REQ'D PILE LENGTH SHOWN ARE FOR ESTIMATING PURPOSE (WITH FACTOR OF SAFETY=2.00). A PILE TEST SHALL BE PERFORMED PRIOR TO ORDERING PILES.

SERVICE LOAD = 30 TONS
HP 14x73 TIP ELEV. = (±)-76.00 (NGVD)

SCALE: 1" = 3'- 0"
2' 0 2' 4' 6' 8' 10' 12'

SYMBOL	DESCRIPTION	DATE	APPROVED

REVISIONS

U.S. ARMY ENGINEER DISTRICT, NEW ORLEANS
CORPS OF ENGINEERS
NEW ORLEANS, LOUISIANA

BOARD OF LEVEE COMMISSIONERS
ORLEANS LEVEE DISTRICT
NEW ORLEANS, LOUISIANA

MEYER ENGINEERS, LTD. METAIRIE, LOUISIANA
LAKE PONTCHARTRAIN, LA AND VICINITY
HIGH LEVEL PLAN
LONDON AVE. OUTFALL CANAL, PARALLEL PROTECTION FLOODPROOFING OF MIRABEAU AVE. & FILMORE AVE. BRIDGES
ORLEANS PARISH, LOUISIANA

MIRABEAU AVENUE SEALED BRIDGE ABUTMENT PLAN AND ELEVATIONS

DESIGNED BY: JCS	DATE: 3-12-01	PLOT SCALE: 1"=3'	PLOT DATE: 6-27-01
DRAWN BY: BMS			
CHECKED BY: JCS	CADD FILE: 9362B30		FILE NO. H-4-44674
SUBMITTED BY: MEYER ENGINEERS, LTD. DESIGN ENGINEER	SOLICITATION NO. DACW29-01-B-0092		DWG. 30 OF 97

VALUE ENGINEERING INCENTIVE CLAUSES — YOUR KEY TO HIGHER PROFITS

C•A•D

Safety is a Part of Your Contract

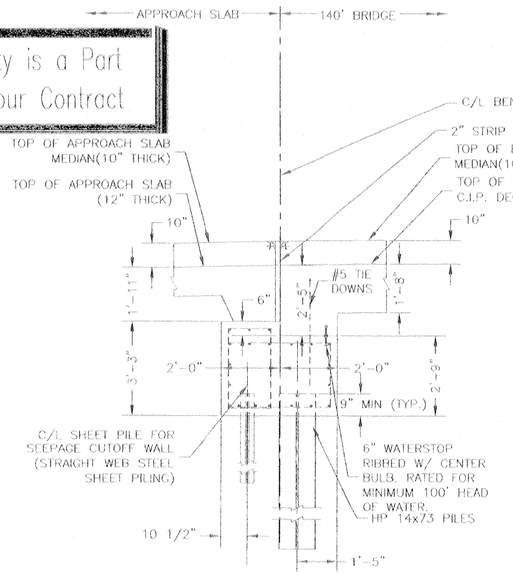

SECTION A (30|31)
SCALE: 1/2"=1'-0"

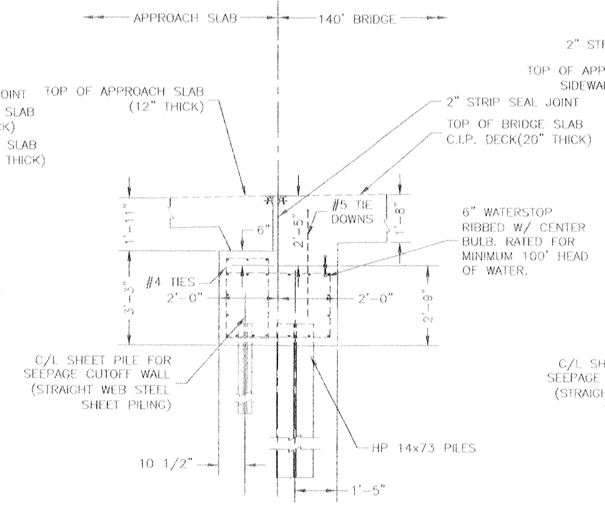

SECTION B (30|31)
SCALE: 1/2"=1'-0"

NOTE:
FOR SPACING OF SETS OF STIRRUPS, SEE ELEVATION, DWG. 81.

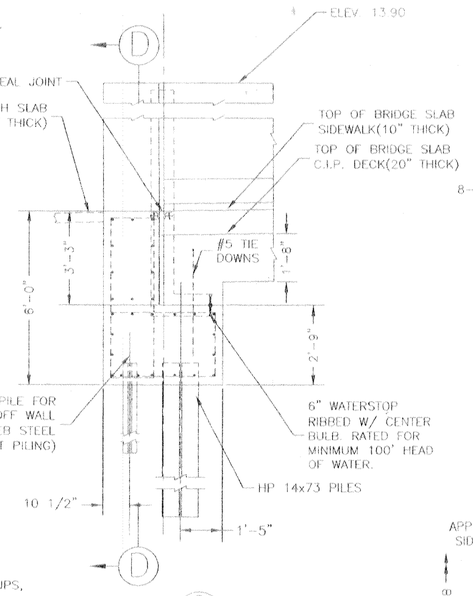

SECTION C (30|31)
SCALE: 1/2"=1'-0"

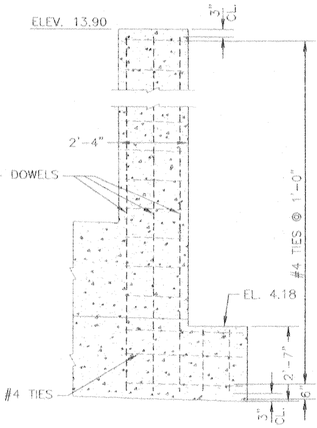

SECTION D
SCALE: 1/2"=1'-0"

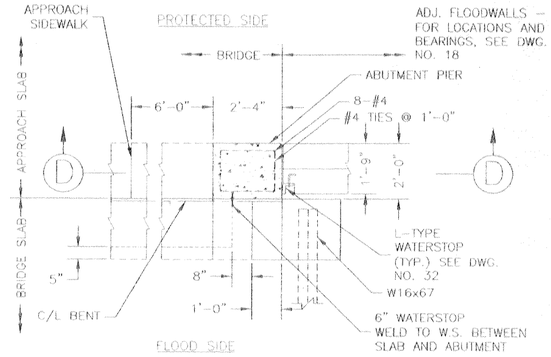

TYPICAL ABUTMENT PIER SECTION
SCALE: 1/2"=1'-0"

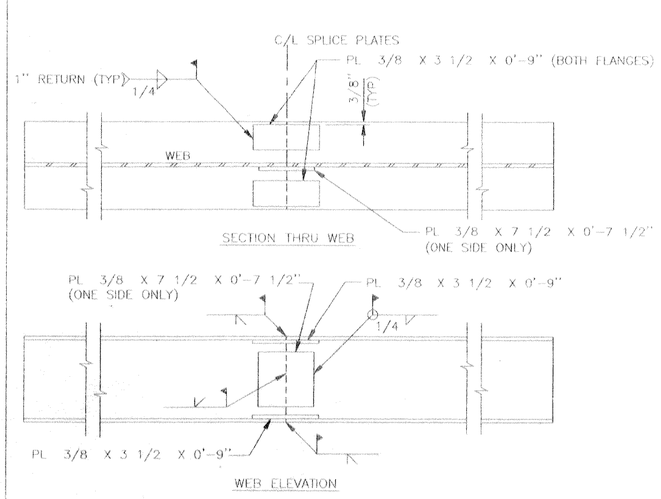

HP PILE SPLICE
SCALE: 1 1/2"=1'

NOTES:
1. GROOVE WELDS SHALL BE GROUND SMOOTH FOR FLUSH FIT OF OVERLAPPING SPLICE PLATES AS REQUIRED.
2. PILES SHALL BE SPLICED AFTER DRIVING EACH PROCEEDING PORTION OF THE POLE.
3. NO MORE THAN TWO SPLICES PER PILE ARE ALLOWABLE.
4. THE MINIMUM DISTANCE BELOW THE PILE CUTOFF ELEVATION TO THE FIRST PILE SPLICE SHALL BE 30'-0".
5. THE FOUR FLANGE PLATES SHALL BE IN PLACE BEFORE THE GROOVE WELDS ARE MADE.

NOTES:
1. UPPER 10 FEET OF HP 14x73 TO RECIEVE PAINTING.

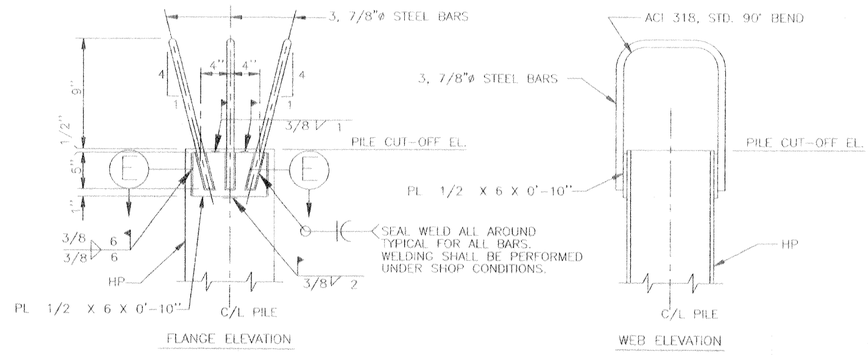

NOTE:
PROVIDE TENSION PILE CONNECTIONS TO ALL HP STEEL PILES.

TENSION PILE CONNECTION DETAIL
SCALE: 1 1/2"=1'

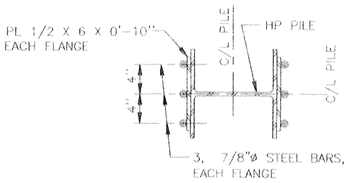

SECTION E
SCALE: 1"=1 1/2"

SCALE: 1/8" = 1'- 0"
8' 4' 0 8' 16' 24' 32' 48'

SCALE: 1/2" = 1'- 0"
24" 12" 0 2' 4' 6' 8' 10'

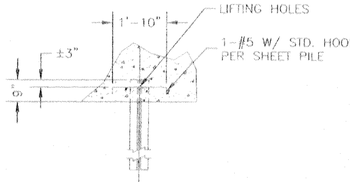

SHEET PILE ANCHOR DETAIL
SCALE: 1/2"=1'-0"

REFERENCE DRAWINGS:
FOR GENERAL NOTES, SEE DWG. NO. 4
FOR STRUCTURE PLAN AND ELEVATION, SEE DWG. NO. 17.

VALUE ENGINEERING INCENTIVE CLAUSES — YOUR KEY TO HIGHER PROFITS

C·A·D

SYMBOL	DESCRIPTION	DATE	APPROVED
REVISIONS			

U.S. ARMY ENGINEER DISTRICT, NEW ORLEANS
CORPS OF ENGINEERS
NEW ORLEANS, LOUISIANA

BOARD OF LEVEE COMMISSIONERS
ORLEANS LEVEE DISTRICT
NEW ORLEANS, LOUISIANA

MEYER ENGINEERS, LTD. METAIRIE, LOUISIANA

LAKE PONTCHARTRAIN, LA AND VICINITY
HIGH LEVEL PLAN

LONDON AVE. OUTFALL CANAL, PARALLEL PROTECTION FLOODPROOFING OF MIRABEAU AVE. & FILMORE AVE. BRIDGES
ORLEANS PARISH, LOUISIANA

MIRABEAU AVENUE SEALED BRIDGE ABUTMENT DETAILS

DESIGNED BY: JCS	DATE: 3-12-01	PLOT SCALE: 1"=4'	PLOT DATE: 6-27-01
DRAWN BY: MJF			
CHECKED BY: JCS	CADD FILE: 930251		FILE NO. H-4-44674
SUBMITTED BY: MEYER ENGINEERS, LTD. DESIGN ENGINEER	SOLICITATION NO. DACW29-01-B-0092		DWG. 31 OF 97

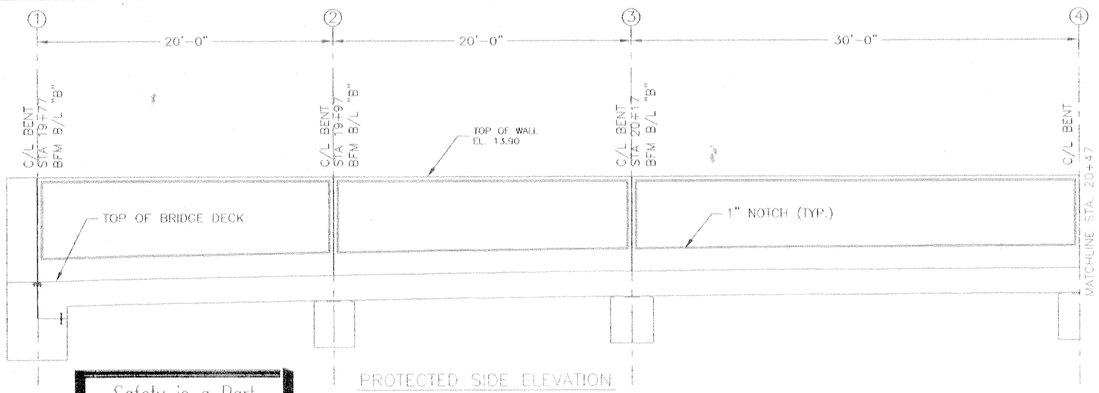

PROTECTED SIDE ELEVATION
SHOWING PARAPET WALL FINISH
SCALE: 1/4" = 1'-0"

Safety is a Part of Your Contract

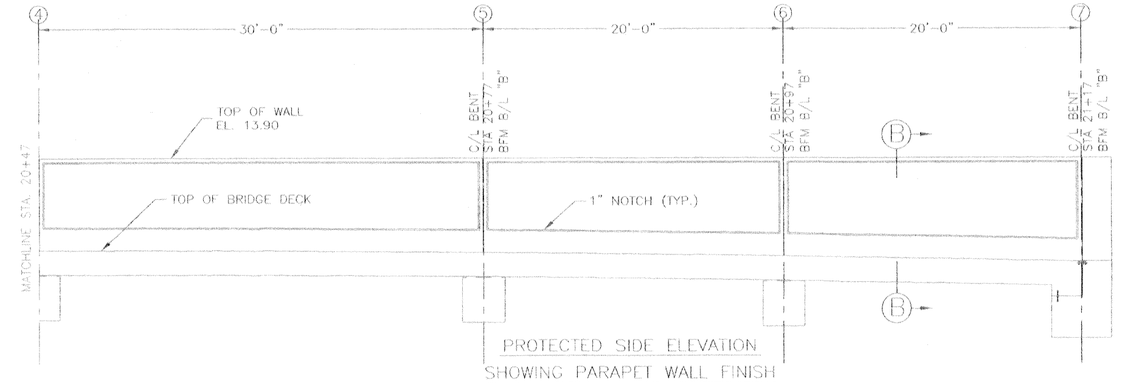

PROTECTED SIDE ELEVATION
SHOWING PARAPET WALL FINISH
SCALE: 1/4" = 1'-0"

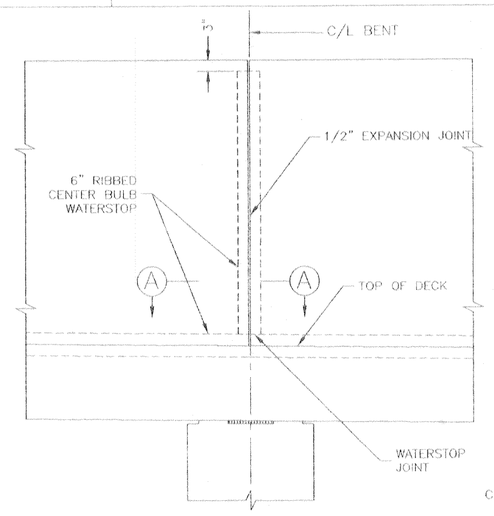

PROTECTED SIDE ELEVATION
PARAPET WALL JOINTS AT BENTS
SCALE: 3/4" = 1'-0"

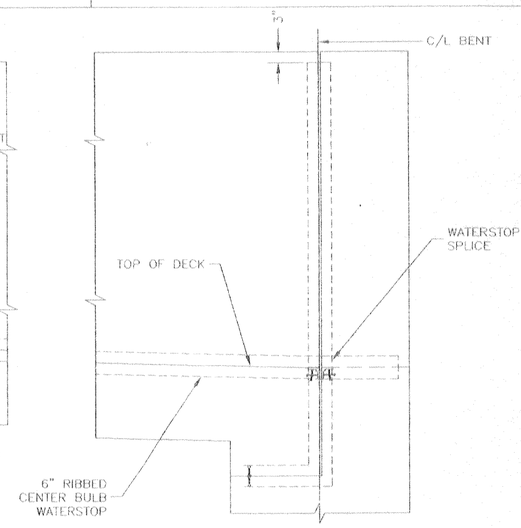

PROTECTED SIDE ELEVATION
DECK/PARAPET WALL SEAL AT ABUTMENTS
SCALE: 3/4" = 1'-0"

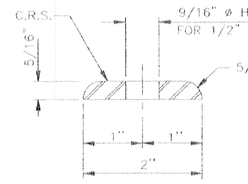

SEAL RETAINING BAR
SCALE: 12" = 1'-0"

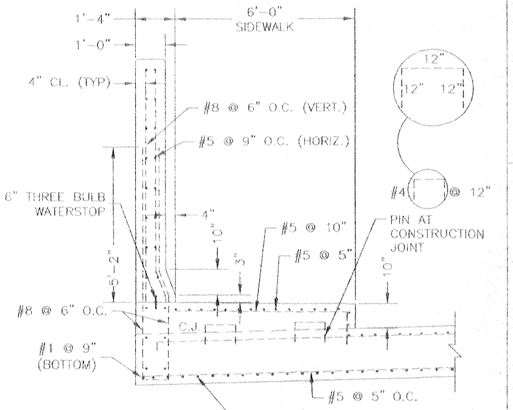

DETAIL 1
SCALE: 1/2"=1'-0"

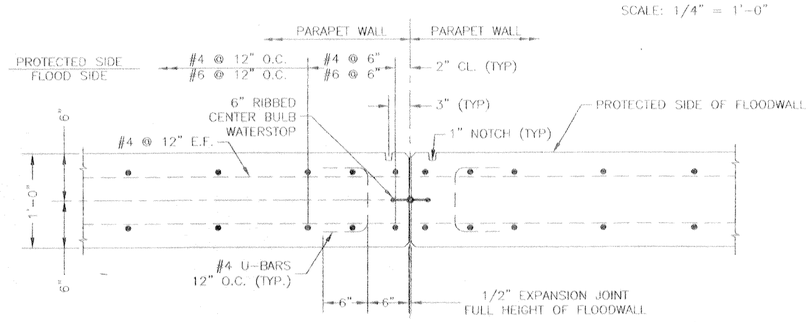

SECTION (A)
SCALE: 6"=1'

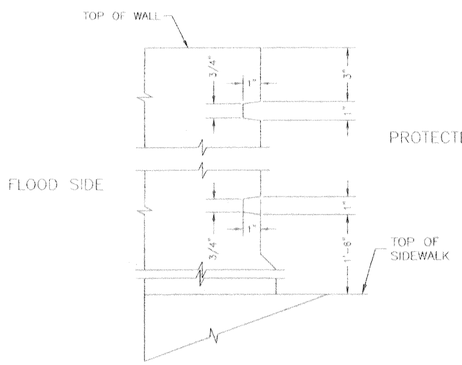

SECTION (B)
SCALE: 3"=1'-0"

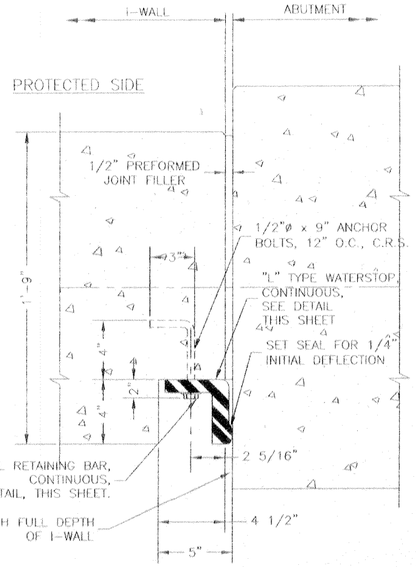

FLOOD SIDE PLAN
I-WALL TO ABUTMENT
SCALE: 3" = 1'-0"

6" THREE BULB WATERSTOP
SCALE: 1" = 2"

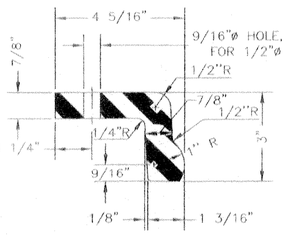

"L" TYPE WATERSTOP
SCALE: 6" = 1'-0"

SCALE: 1" = 1'-0"
12" 0 1' 2' 3' 4' 5'

SCALE: 1/2"=1'-0"
24" 0 2' 4' 6' 8' 10'

SCALE: 4" = 1'-0"
12" 9" 6" 3" 0" 1'

SCALE: 1/4"=1'-0"
24" 12" 0 1' 2' 3' 4' 5'

VALUE INCENTIVE ENGINEERING CLAUSES
YOUR KEY TO HIGHER PROFITS

C•A•D

SYMBOL	DESCRIPTION	DATE	APPROVED
REVISIONS			

U.S. ARMY ENGINEER DISTRICT, NEW ORLEANS
CORPS OF ENGINEERS
NEW ORLEANS, LOUISIANA

BOARD OF LEVEE COMMISSIONERS
ORLEANS LEVEE DISTRICT
NEW ORLEANS, LOUISIANA

MEYER ENGINEERS, LTD. METAIRIE, LOUISIANA
LAKE PONTCHARTRAIN, LA. AND VICINITY
HIGH LEVEL PLAN

LONDON AVE. OUTFALL CANAL, PARALLEL PROTECTION FLOODPROOFING OF MIRABEAU AVE. & FILMORE AVE. BRIDGES
ORLEANS PARISH, LOUISIANA

MIRABEAU AVENUE SEALED BRIDGE ABUTMENT JOINTS & PARAPET WALL DETAILS

DESIGNED BY: JCS	DATE: 3-12-01	PLOT SCALE: 1"=3'	PLOT DATE: 6-27-01
DRAWN BY: MJF			
CHECKED BY: JCS	CADD FILE: 9362632		FILE NO. H-4-44674
SUBMITTED BY: MEYER ENGINEERS, LTD. DESIGN ENGINEER	SOLICITATION NO. DACW29-01-B-0092		DWG. 32 OF 97

Safety is a Part of Your Contract

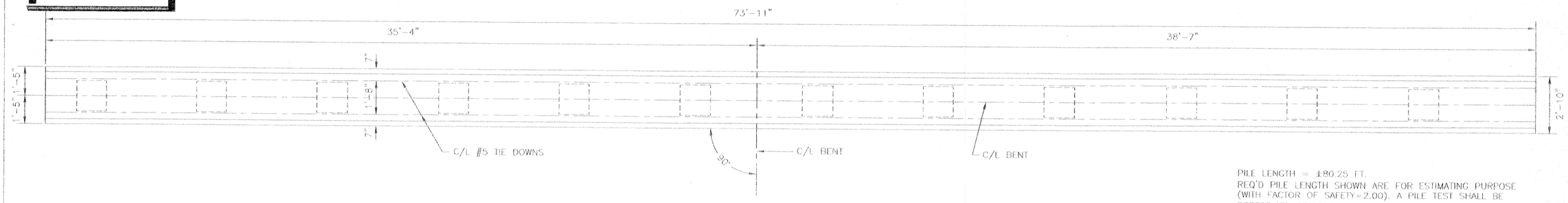

PILE LENGTH = ±80.25 FT.
REQ'D PILE LENGTH SHOWN ARE FOR ESTIMATING PURPOSE (WITH FACTOR OF SAFETY=2.00). A PILE TEST SHALL BE PERFORMED PRIOR TO ORDERING PILES.

SERVICE LOAD = 30 TONS
18"x18" P.C.P. TIP ELEV. = (±)-73.5

PLAN
SCALE: 1/2"=1'-0"

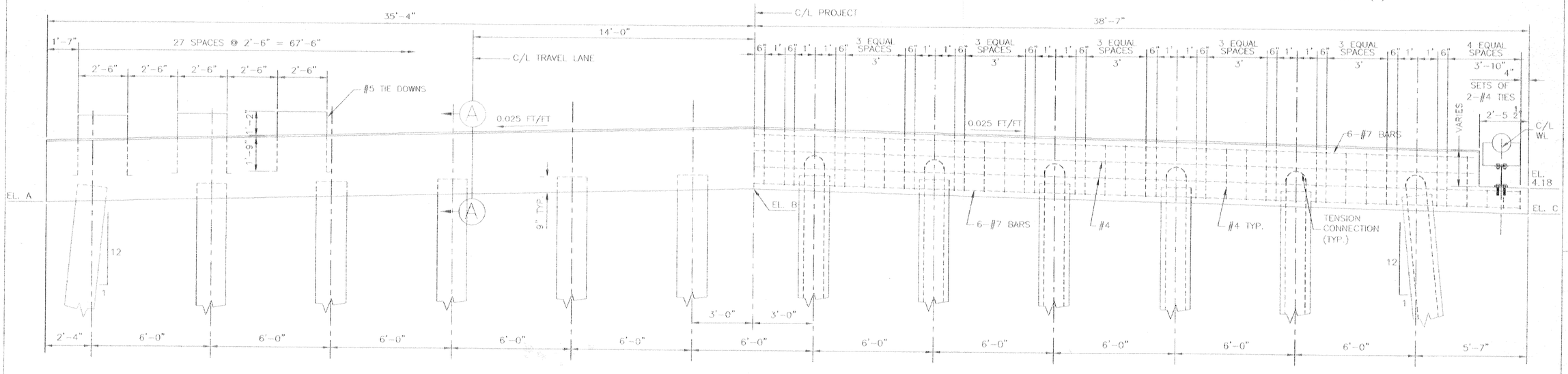

ELEVATION
SCALE: 1/2"=1'-0"

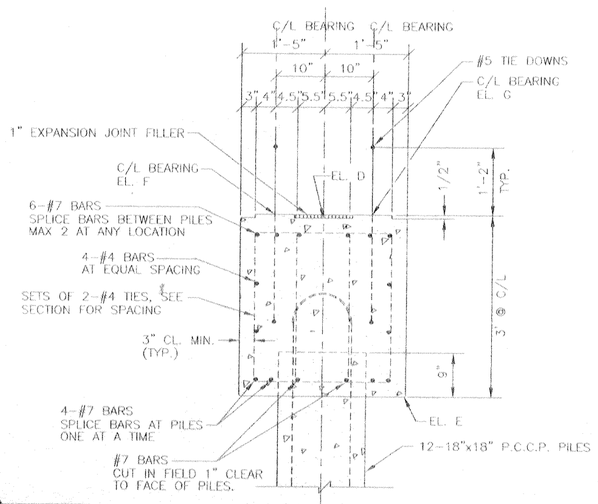

SECTION (A)
SCALE: 1"=1'-0"

C/L BENT	BFM B/L STATION	ELEV. A	ELEV. B	ELEV. C
②	19+97	2.53	3.41	2.45
③	20+17	2.80	3.68	2.72
④	20+47	2.95	3.83	2.87
⑤	20+77	2.80	3.68	2.72
⑥	20+97	2.53	3.41	2.45

C/L BENT	BFM B/L STATION	ELEV. D*	ELEV. E	ELEV. F	ELEV. G
②	19+97	6.06	3.06	6.13	6.16
③	20+17	6.33	3.33	6.40	6.42
④	20+47	6.48	3.48	6.56	6.56
⑤	20+77	6.33	3.33	6.42	6.40
⑥	20+97	6.06	3.06	6.16	6.13

* ELEVATION AT BOTTOM OF EXPANSION JOINT MATERIAL

SCALE: 1/2" = 1'-0"
24" 12" 0 2' 4' 6' 8' 10'

SCALE: 1" = 1'-0"
12" 6" 0 2' 4' 6'

REFERENCE DRAWINGS
FOR GENERAL NOTES, SEE DWG. NO. 4
FOR BENT LOCATIONS, SEE DWG. NO. 7
FOR STRUCTURE PLAN AND ELEVATION, SEE DWG. NO. 17

SYMBOL	DESCRIPTION	DATE	APPROVED

REVISIONS

U.S. ARMY ENGINEER DISTRICT, NEW ORLEANS
CORPS OF ENGINEERS
NEW ORLEANS, LOUISIANA

BOARD OF LEVEE COMMISSIONERS
ORLEANS LEVEE DISTRICT
NEW ORLEANS, LOUISIANA

MEYER ENGINEERS, LTD. METAIRIE, LOUISIANA
LAKE PONTCHARTRAIN, LA. AND VICINITY

HIGH LEVEL PLAN

LONDON AVE. OUTFALL CANAL, PARALLEL PROTECTION FLOODPROOFING OF MIRABEAU AVE. & FILMORE AVE. BRIDGES
ORLEANS PARISH, LOUISIANA

MIRABEAU AVENUE SEALED BRIDGE INTERMED. BENT PLAN AND ELEVATION

DESIGNED BY: JCS	DATE: 3-12-01	PLOT SCALE: 1"=2'	PLOT DATE: 6-27-01
DRAWN BY: MJF			
CHECKED BY: JCS	CADD FILE: 9362033		FILE NO. H-4-44674
SUBMITTED BY: MEYER ENGINEERS, LTD. DESIGN ENGINEER	SOLICITATION NO. DACW29-01-B-0092		DWG. 33 OF 97

VALUE ENGINEERING INCENTIVE CLAUSES 52.248-1 & 52.248-3 — YOUR KEY TO HIGHER PROFITS

C•A•D

Safety is a Part of Your Contract

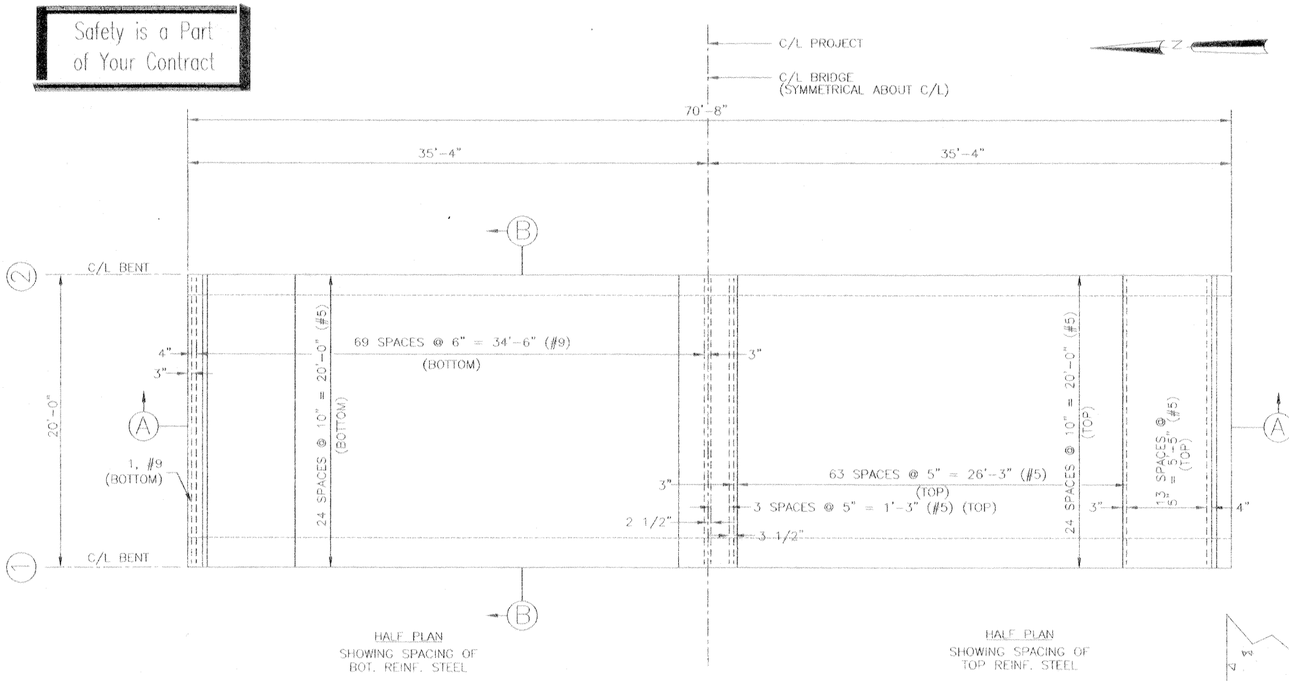

PLAN SHOWING SPACING OF TRANS. REINF. STEEL

SCALE: 1/4"=1'-0"

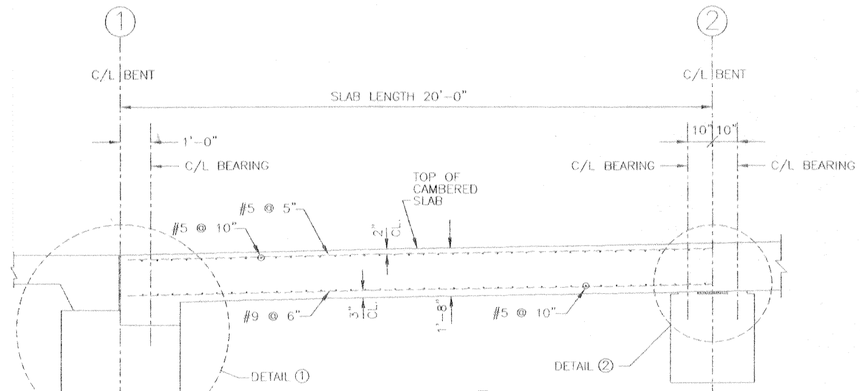

SECTION (B)

SCALE: 1/2"=1'-0"

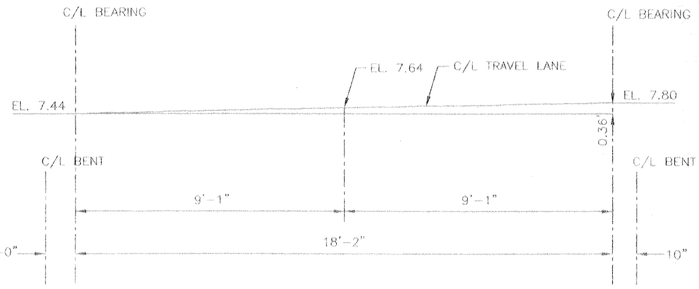

BRIDGE DECK CAMBER (SPAN 1)

SCALE: 1/2"=1'-0"

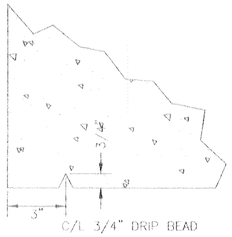

DETAIL (3)

SCALE: 4"=1'-0"

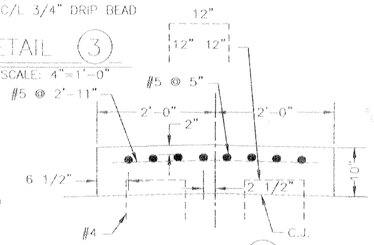

DETAIL (4)

SCALE: 1"=1'-0"

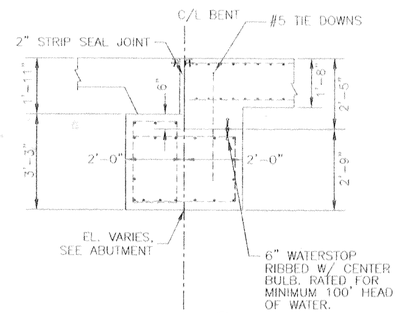

DETAIL (1)

SCALE: 1/2"=1'-0"

REFERENCE DRAWINGS

FOR GENERAL NOTES, SEE DWG. NO. 4
FOR SPAN LAYOUT, SEE DWG. NO. 17

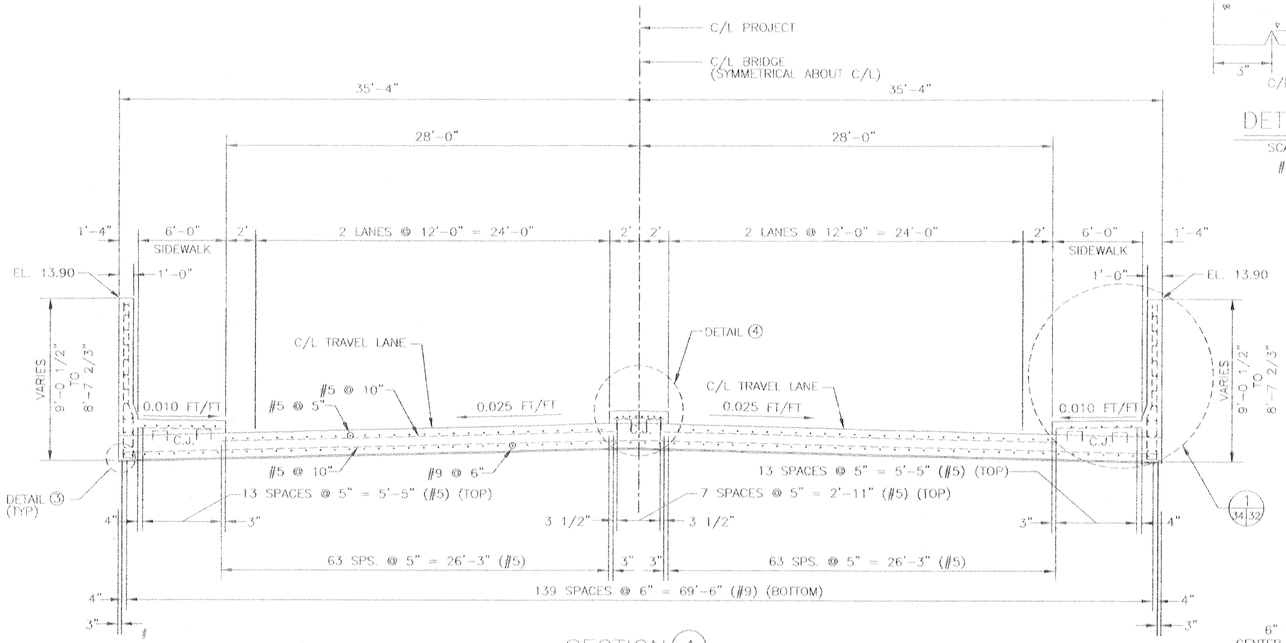

SECTION (A)

SCALE: 1/4"=1'-0"

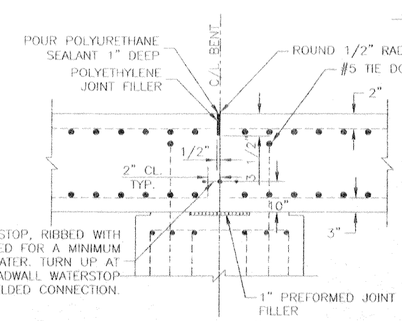

DETAIL (2)

SCALE: 1"=1'-0"

SCALE: 1" = 1'-0"

12" 0 1' 2' 3' 4' 5'

SCALE: 1/2"=1'-0"

24" 0 2' 4' 6' 8' 10'

SCALE: 4" = 1'-0"

12" 9" 6" 3" 0" 1'

SCALE: 1/4"=1'-0"

24" 12" 0 2' 4' 6' 8' 10'

VALUE ENGINEERING — INCENTIVE CLAUSES — YOUR KEY TO HIGHER PROFITS

C+A+D

SYMBOL	DESCRIPTION	DATE	APPROVED
REVISIONS			

U.S. ARMY ENGINEER DISTRICT, NEW ORLEANS
CORPS OF ENGINEERS
NEW ORLEANS, LOUISIANA

BOARD OF LEVEE COMMISSIONERS
ORLEANS LEVEE DISTRICT
NEW ORLEANS, LOUISIANA

MEYER ENGINEERS, LTD. METAIRIE, LOUISIANA

LAKE PONTCHARTRAIN, LA AND VICINITY
HIGH LEVEL PLAN

LONDON AVE. OUTFALL CANAL, PARALLEL PROTECTION FLOODPROOFING OF MIRABEAU AVE. & FILMORE AVE. BRIDGES

ORLEANS PARISH, LOUISIANA

MIRABEAU AVE. BRIDGE 20'-0" CONCRETE SLAB SPAN
70'-8" ROADWAY 90° CROSSING
TWO WAY TANGENT CROWN
(SPAN 1)

DESIGNED BY: JCS	DATE: 3-12-01	PLOT SCALE: 1"=4'	PLOT DATE: 6-27-01
DRAWN BY: HL			
CHECKED BY: JCS	CADD FILE: 9362034		FILE NO. H-4-44674
SUBMITTED BY: MEYER ENGINEERS, LTD. DESIGN ENGINEER	SOLICITATION NO. DACW29-01-B-0092		DWG. 34 OF 97

Safety is a Part of Your Contract

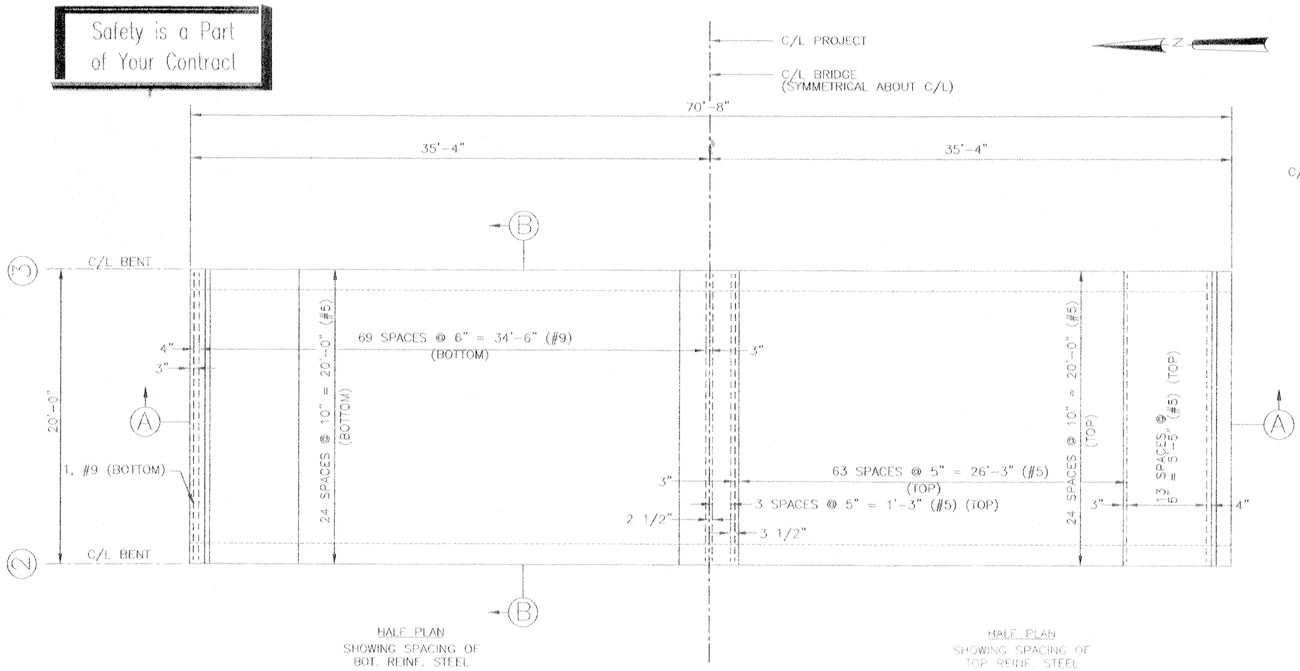

PLAN SHOWING SPACING OF TRANS. REINF. STEEL

SCALE: 1/4"=1'-0"

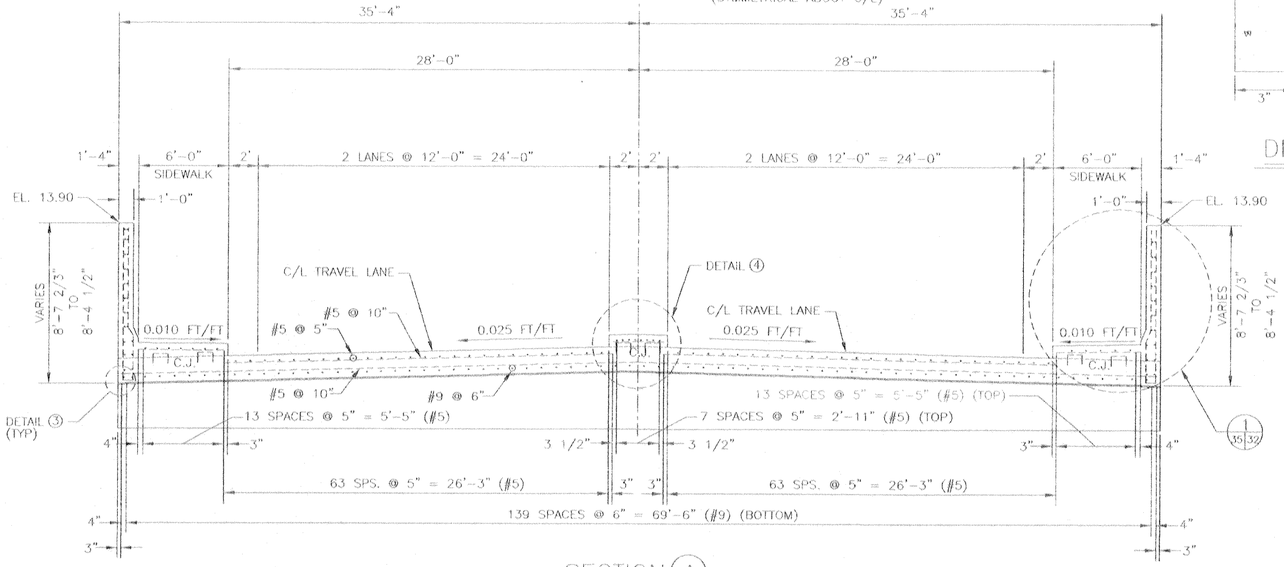

SECTION (A)

SCALE: 1/4"=1'-0"

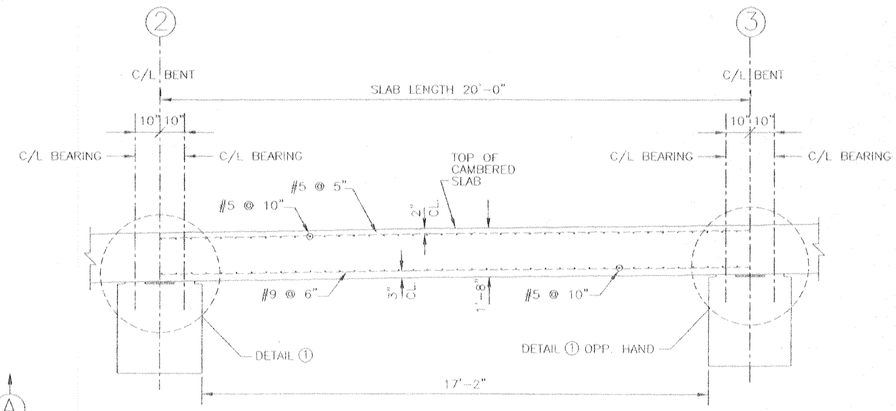

SECTION (B)

SCALE: 1/2"=1'-0"

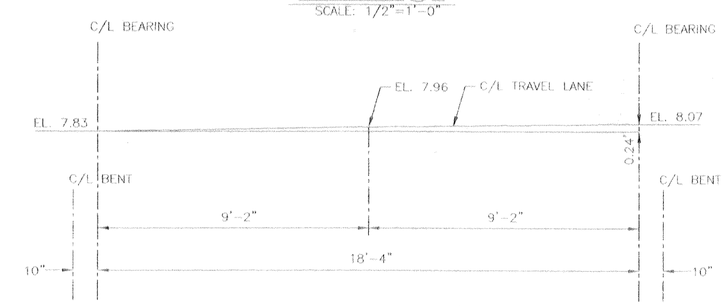

BRIDGE DECK CAMBER (SPAN 2)

SCALE: 1/2"=1'-0"

DETAIL (3)

SCALE: 4"=1'-0"

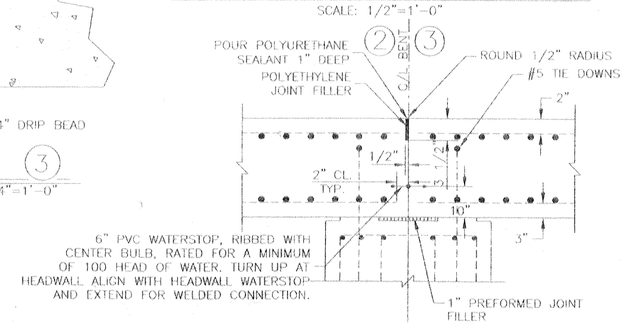

DETAIL (2)

SCALE: 1"=1'-0"

@ BENT (3) OPP. HAND

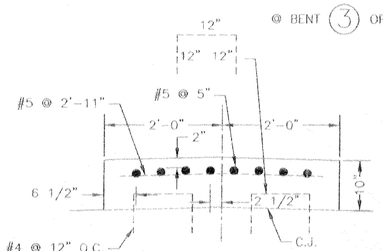

DETAIL (4)

SCALE: 1"=1'-0"

REFERENCE DRAWINGS

FOR GENERAL NOTES, SEE DWG. NO. 4
FOR SPAN LAYOUT, SEE DWG. NO. 17

SYMBOL	DESCRIPTION	DATE	APPROVED

REVISIONS

U.S. ARMY ENGINEER DISTRICT, NEW ORLEANS
CORPS OF ENGINEERS
NEW ORLEANS, LOUISIANA

BOARD OF LEVEE COMMISSIONERS
ORLEANS LEVEE DISTRICT
NEW ORLEANS, LOUISIANA

MEYER ENGINEERS, LTD. METAIRIE, LOUISIANA

LAKE PONTCHARTRAIN, LA. AND VICINITY
HIGH LEVEL PLAN
LONDON AVE. OUTFALL CANAL, PARALLEL PROTECTION FLOODPROOFING OF FILMORE AVE. & MIRABEAU AVE. BRIDGES
ORLEANS PARISH, LOUISIANA

MIRABEAU AVE. BRIDGE 20'-0" CONCRETE SLAB SPAN
70'-8" ROADWAY 90° CROSSING
TWO WAY TANGENT CROWN
(SPAN 2)

DESIGNED BY: JCS	DATE: 3-12-01	PLOT SCALE: 1"=4'	PLOT DATE: 6-27-01
DRAWN BY: HL			
CHECKED BY: JCS	CADD FILE: 9362035		FILE NO. H-4-44674
SUBMITTED BY: MEYER ENGINEERS, LTD. DESIGN ENGINEER	SOLICITATION NO. DACW29-01-B-0092		DWG. 35 OF 97

VALUE ENGINEERING INCENTIVE CLAUSES — YOUR KEY TO HIGHER PROFITS

C*A*D

SCALE: 1" = 1'-0"

12" 0 1' 2' 3' 4' 5'

SCALE: 1/2" = 1'-0"

24" 0 2' 4' 6' 8' 10'

SCALE: 4" = 1'-0"

12" 9" 6" 3" 0" 1'

SCALE: 1/4" = 1'-0"

24" 12" 0 2' 4' 6' 8' 10'

Safety is a Part of Your Contract

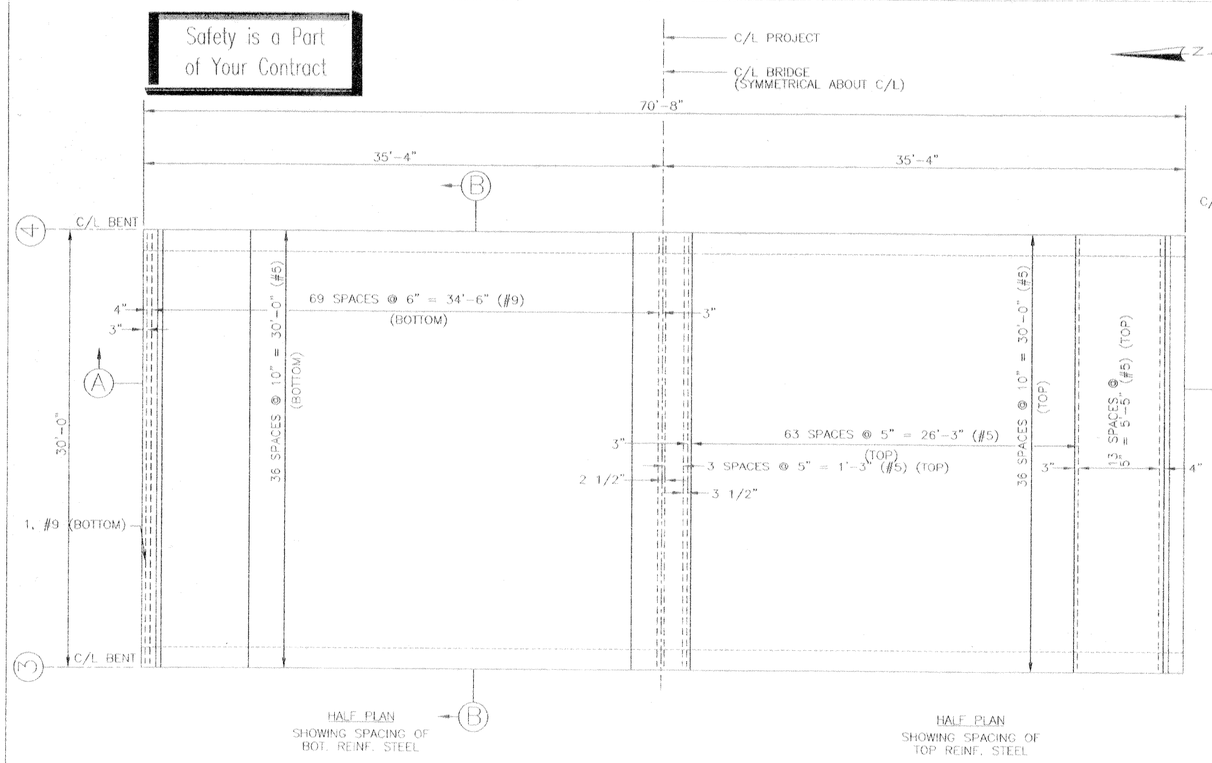

PLAN SHOWING SPACING OF TRANS. REINF. STEEL

SCALE: 1/4"=1'-0"

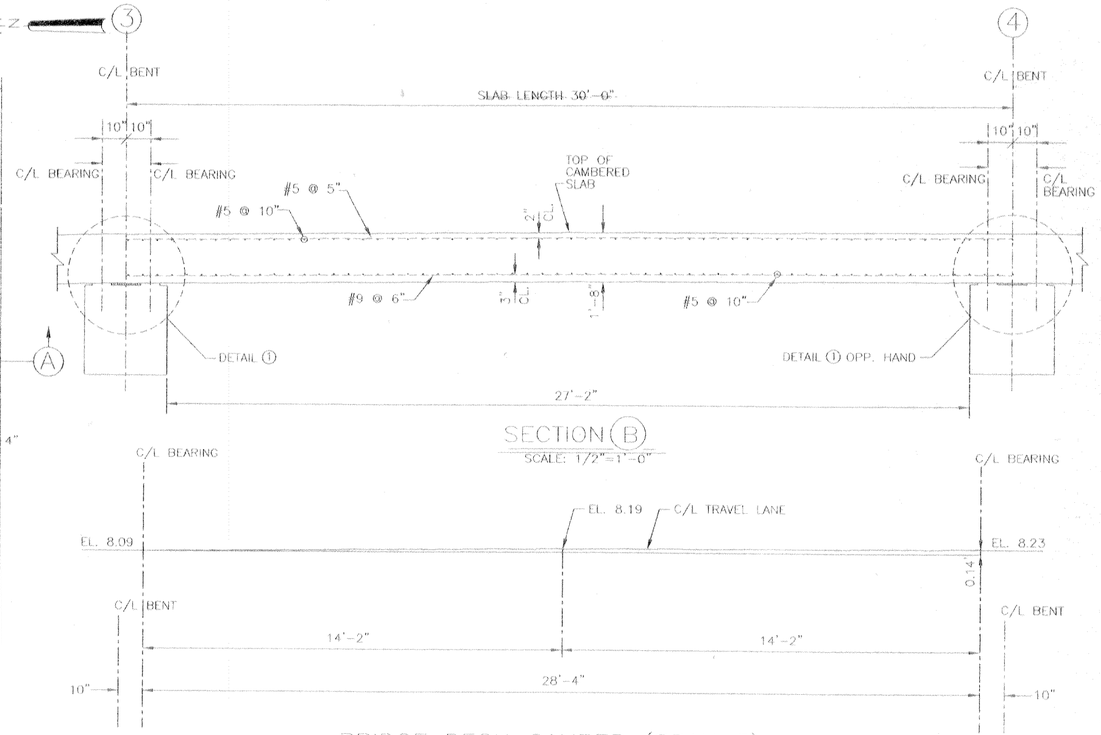

SECTION (B)

SCALE: 1/2"=1'-0"

BRIDGE DECK CAMBER (SPAN 3)

SCALE: 1/2"=1'-0"

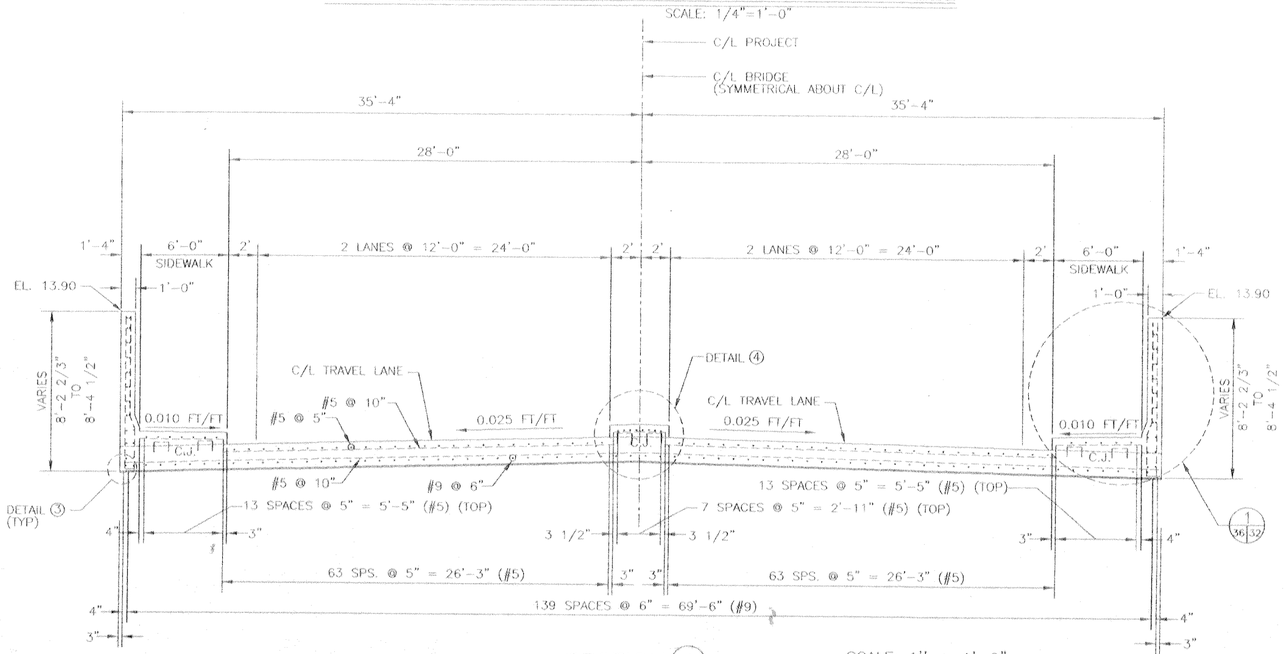

SECTION (A)

SCALE: 1/4"=1'-0"

SCALE: 1" = 1'-0"

12" 0 1' 2' 3' 4' 5'

SCALE: 1/2"=1'-0"

24" 0 2' 4' 6' 8' 10'

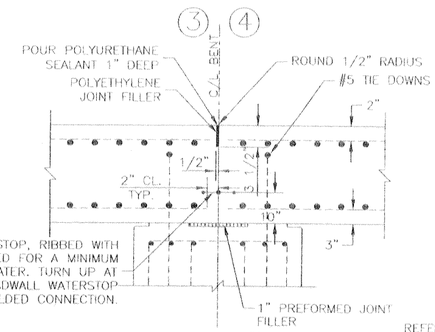

DETAIL (2)

SCALE: 1"=1'-0"

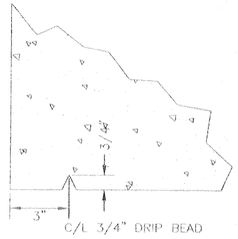

DETAIL (3)

SCALE: 4"=1'-0"

REFERENCE DRAWINGS

FOR GENERAL NOTES, SEE DWG. NO. 4
FOR SPAN LAYOUT, SEE DWG. NO. 17

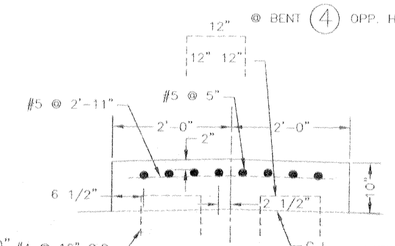

SCALE: 4" = 1'-0" #4 @ 12" O.C.

12" 9" 6" 3" 0" 1'

DETAIL (4)

SCALE: 1"=1'-0"

SCALE: 1/4"=1'-0"

24" 12" 0 2' 4' 6' 8' 10'

VALUE ENGINEERING — INCENTIVE CLAUSES — YOUR KEY TO HIGHER PROFITS

C-A-D

SYMBOL	DESCRIPTION	DATE	APPROVED
	REVISIONS		

U.S. ARMY ENGINEER DISTRICT, NEW ORLEANS
CORPS OF ENGINEERS
NEW ORLEANS, LOUISIANA

BOARD OF LEVEE COMMISSIONERS
ORLEANS LEVEE DISTRICT
NEW ORLEANS, LOUISIANA

MEYER ENGINEERS, LTD. METAIRIE, LOUISIANA

LAKE PONTCHARTRAIN, LA. AND VICINITY
HIGH LEVEL PLAN
LONDON AVE. OUTFALL CANAL, PARALLEL PROTECTION FLOODPROOFING OF FILMORE AVE. & MIRABEAU AVE. BRIDGES
ORLEANS PARISH, LOUISIANA

MIRABEAU AVE. BRIDGE 30'-0" CONCRETE SLAB SPAN
70'-8" ROADWAY 90° CROSSING
TWO WAY TANGENT CROWN
(SPAN 3)

DESIGNED BY: JCS	DATE: 3-12-01	PLOT SCALE: 1"=4'	PLOT DATE: 6-27-01
DRAWN BY: HL			
CHECKED BY: JCS	CADD FILE: 9362836		FILE NO. H-4-44674
SUBMITTED BY: MEYER ENGINEERS, LTD. DESIGN ENGINEER	SOLICITATION NO. DACW29-01-B-0092		DWG. 36 OF 97

Safety is a Part of Your Contract

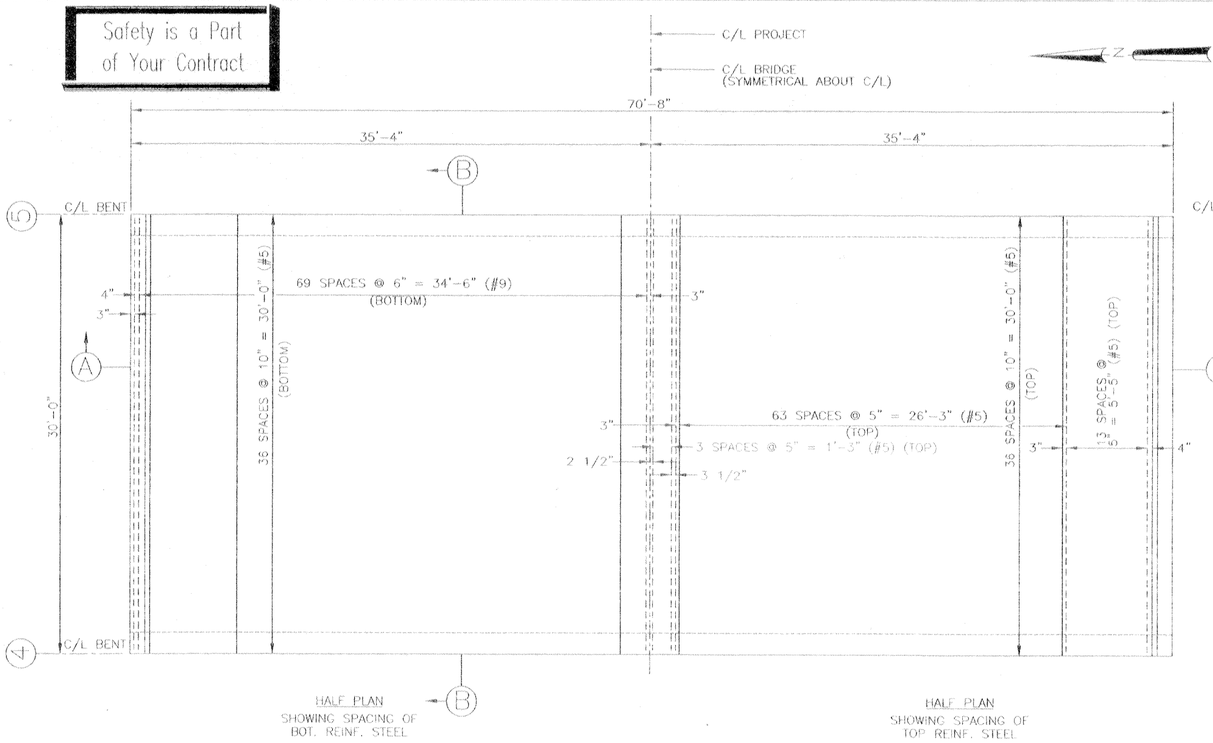

PLAN SHOWING SPACING OF TRANS. REINF. STEEL

SCALE: 1/4"=1'-0"

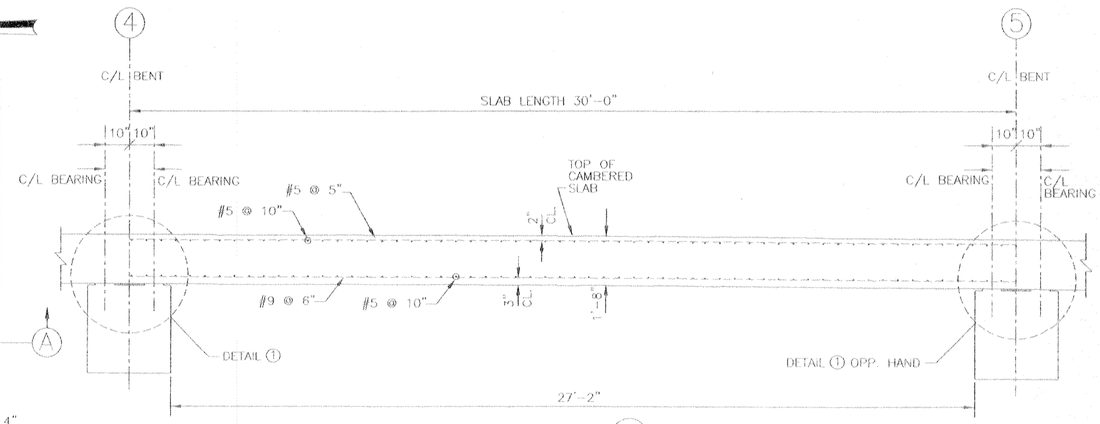

SECTION (B)

SCALE: 1/2"=1'-0"

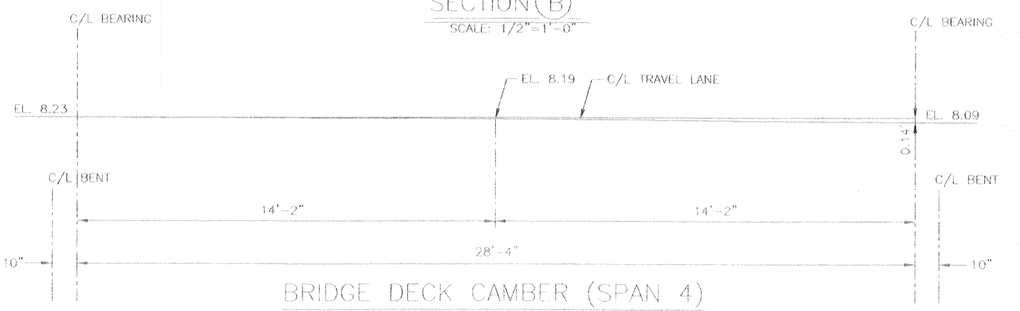

BRIDGE DECK CAMBER (SPAN 4)

SCALE: 1/2"=1'-0"

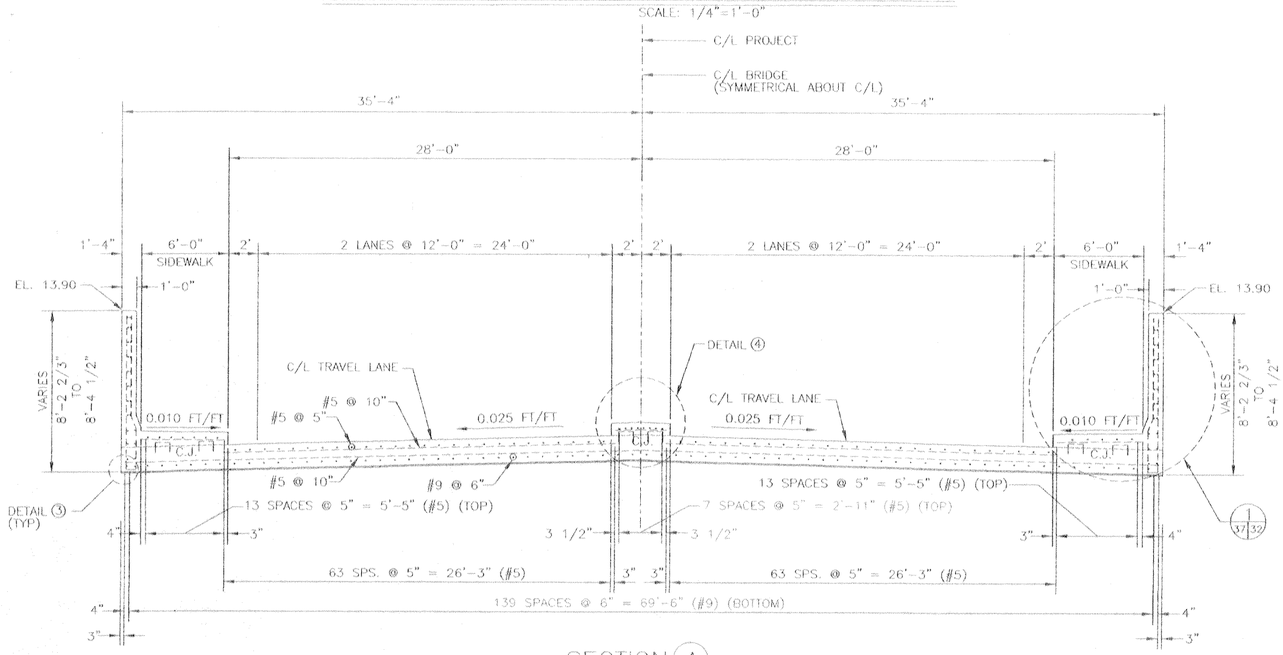

SECTION (A)

SCALE: 1/4"=1'-0"

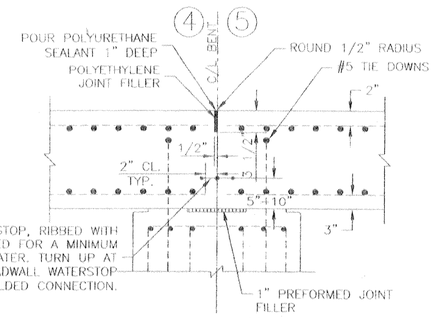

DETAIL (2)

SCALE: 1"=1'-0"

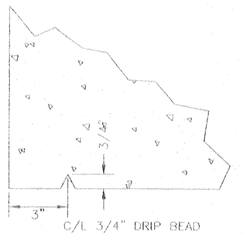

DETAIL (3)

SCALE: 4"=1'-0"

@ BENT (5) OPP. HAND

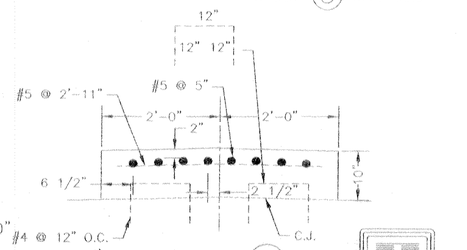

DETAIL (4)

SCALE: 1"=1'-0"

SCALE: 1" = 1'-0"

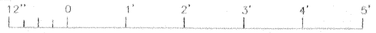

SCALE: 1/2"=1'-0"

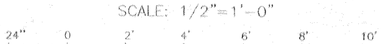

SCALE: 4" = 1'-0"

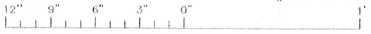

SCALE: 1/4"=1'-0"

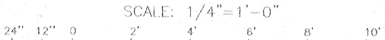

VALUE INCENTIVE CLAUSES TO ENGINEERS
YOUR KEY TO HIGHER PROFITS

REFERENCE DRAWINGS

FOR GENERAL NOTES, SEE DWG. NO. 4
FOR SPAN LAYOUT, SEE DWG. NO. 17

SYMBOL	DESCRIPTION	DATE	APPROVED
	REVISIONS		

U.S. ARMY ENGINEER DISTRICT, NEW ORLEANS
CORPS OF ENGINEERS
NEW ORLEANS, LOUISIANA

BOARD OF LEVEE COMMISSIONERS
ORLEANS LEVEE DISTRICT
NEW ORLEANS, LOUISIANA

MEYER ENGINEERS, LTD. METAIRIE, LOUISIANA

LAKE PONTCHARTRAIN, LA. AND VICINITY
HIGH LEVEL PLAN
LONDON AVE. OUTFALL CANAL, PARALLEL PROTECTION FLOODPROOFING OF FILMORE AVE. & MIRABEAU AVE. BRIDGES
ORLEANS PARISH, LOUISIANA
MIRABEAU AVE. BRIDGE 30'-0" CONCRETE SLAB SPAN
70'-8" ROADWAY 90° CROSSING
TWO WAY TANGENT CROWN
(SPAN 4)

DESIGNED BY: JCS	DATE: 3-12-01	PLOT SCALE: 1"=4'	PLOT DATE: 6-27-01
DRAWN BY: HL			
CHECKED BY: JCS	CADD FILE: 9362B37		FILE NO. H-4-44674
SUBMITTED BY: MEYER ENGINEERS, LTD. DESIGN ENGINEER	SOLICITATION NO. DACW29-01-B-0092		DWG. 37 OF 97

Safety is a Part of Your Contract

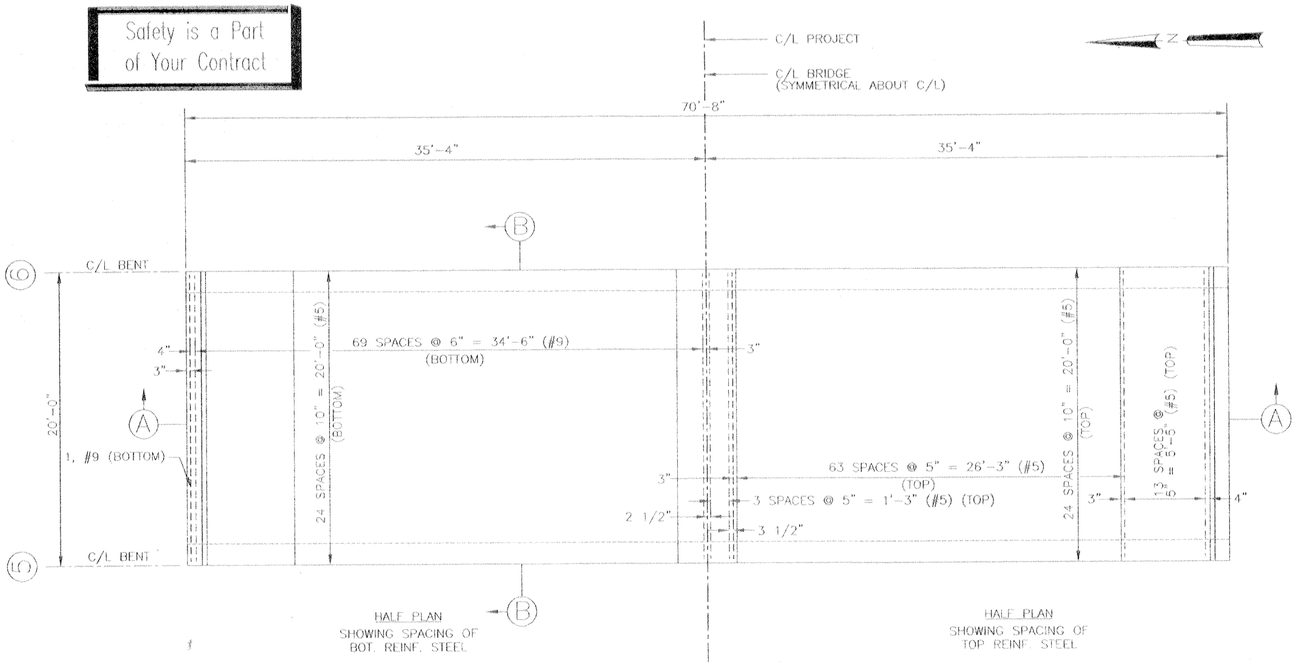

PLAN SHOWING SPACING OF TRANS. REINF. STEEL

SCALE: 1/4"=1'-0"

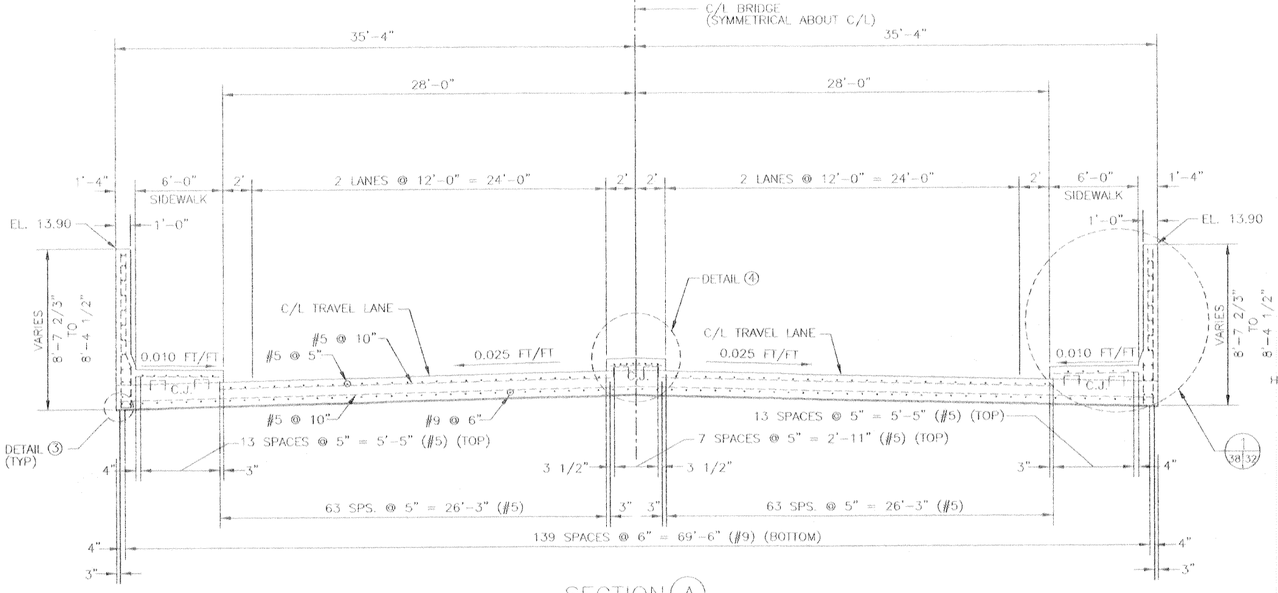

SECTION (A)

SCALE: 1/4"=1'-0"

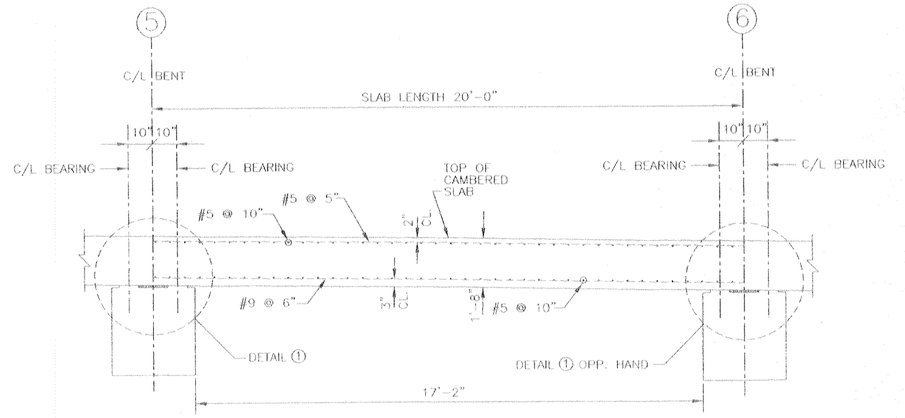

SECTION (B)

SCALE: 1/2"=1'-0"

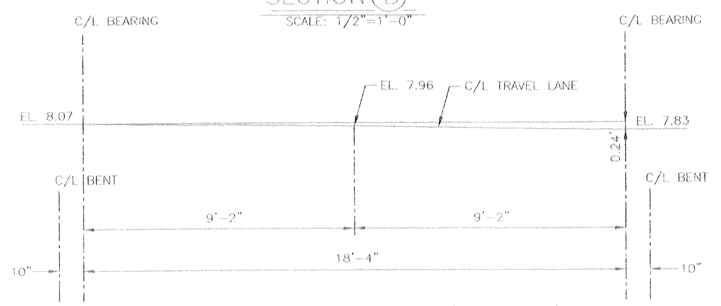

BRIDGE DECK CAMBER (SPAN 5)

SCALE: 1/2"=1'-0"

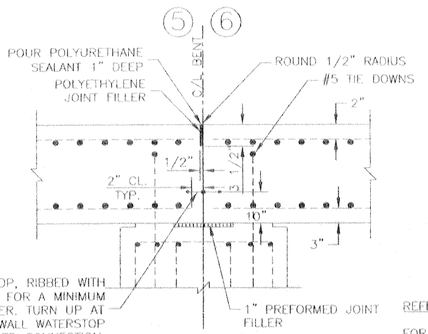

DETAIL (2)

SCALE: 1"=1'-0"

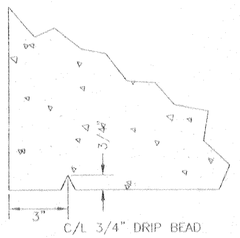

DETAIL (3)

SCALE: 4"=1'-0"

REFERENCE DRAWINGS

FOR GENERAL NOTES, SEE DWG. NO. 4
FOR SPAN LAYOUT, SEE DWG. NO. 17

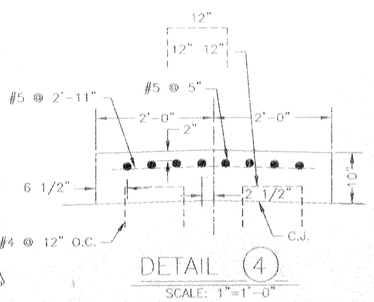

@ BENT (6) OPP. HAND

DETAIL (4)

SCALE: 1"=1'-0"

SYMBOL	DESCRIPTION	DATE	APPROVED
	REVISIONS		

U.S. ARMY ENGINEER DISTRICT, NEW ORLEANS
CORPS OF ENGINEERS
NEW ORLEANS, LOUISIANA

BOARD OF LEVEE COMMISSIONERS
ORLEANS LEVEE DISTRICT
NEW ORLEANS, LOUISIANA

MEYER ENGINEERS, LTD. METAIRIE, LOUISIANA
LAKE PONTCHARTRAIN, LA. AND VICINITY
HIGH LEVEL PLAN
LONDON AVE. OUTFALL CANAL, PARALLEL PROTECTION FLOODPROOFING OF FILMORE AVE. & MIRABEAU AVE. BRIDGES
ORLEANS PARISH, LOUISIANA
MIRABEAU AVE. BRIDGE 20'-0" CONCRETE SLAB SPAN
70'-8" ROADWAY 90° CROSSING
TWO WAY TANGENT CROWN
(SPAN 5)

DESIGNED BY: JCS	DATE: 3-12-01	PLOT SCALE: 1"=4'	PLOT DATE: 6-27-01
DRAWN BY: HL			
CHECKED BY: JCS	CADD FILE: 9362038		FILE NO. H-4-44674
SUBMITTED BY: MEYER ENGINEERS, LTD. DESIGN ENGINEER	SOLICITATION NO. DACW29-01-B-0092		DWG. 38 OF 97

VALUE ENGINEERING: ⊙INCENTIVE ⊙CLAUSES — YOUR KEY TO HIGHER PROFITS

SCALE: 1" = 1'-0"
12" 0 1' 2' 3' 4' 5'

SCALE: 1/2"=1'-0"
24" 0 2' 4' 6' 8' 10'

SCALE: 4" = 1'-0"
12" 9" 6" 3" 0" 1'

SCALE: 1/4"=1'-0"
24" 12" 0 2' 4' 6' 8' 10'

C·A·D

Safety is a Part of Your Contract

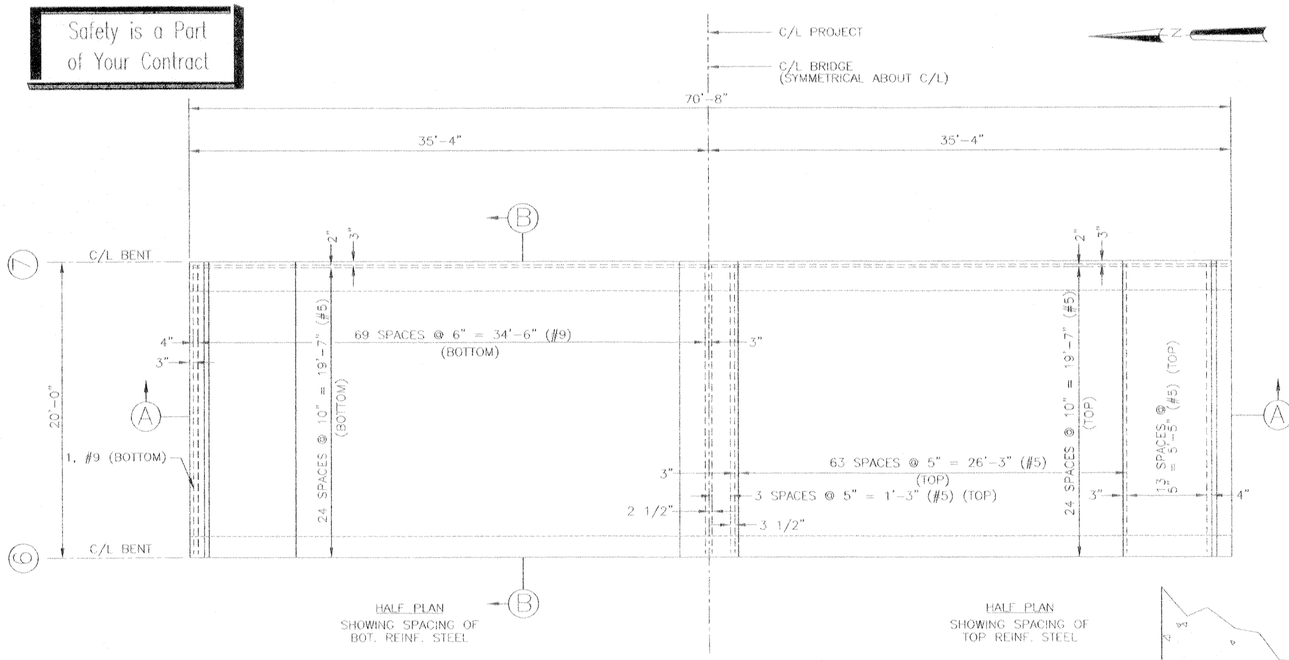

PLAN SHOWING SPACING OF TRANS. REINF. STEEL

SCALE: 1/4"=1'-0"

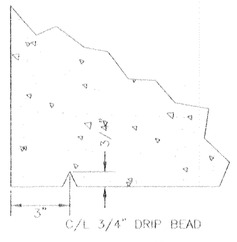

DETAIL (3)

SCALE: 4"=1'-0"

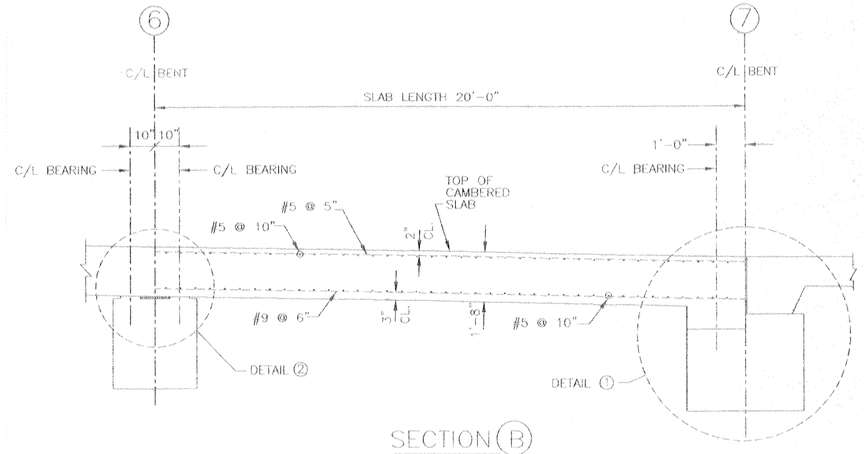

SECTION (B)

SCALE: 1/2"=1'-0"

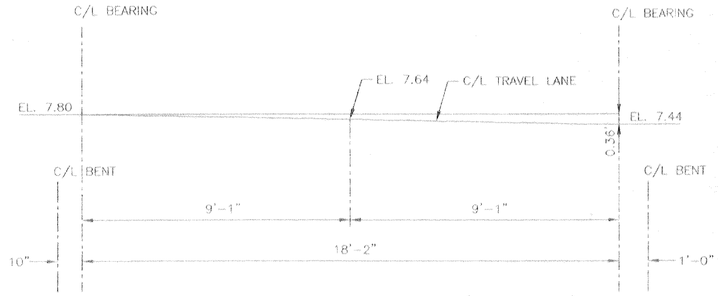

BRIDGE DECK CAMBER (SPAN 6)

SCALE: 1/2"=1'-0"

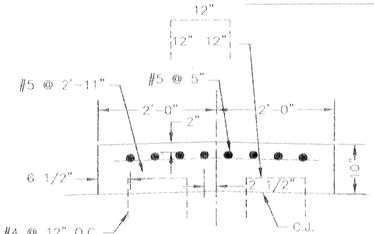

DETAIL (4)

SCALE: 1"=1'-0"

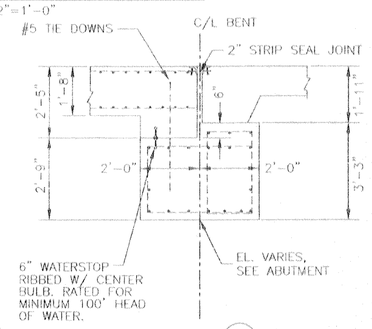

DETAIL (1)

SCALE: 1/2"=1'-0"

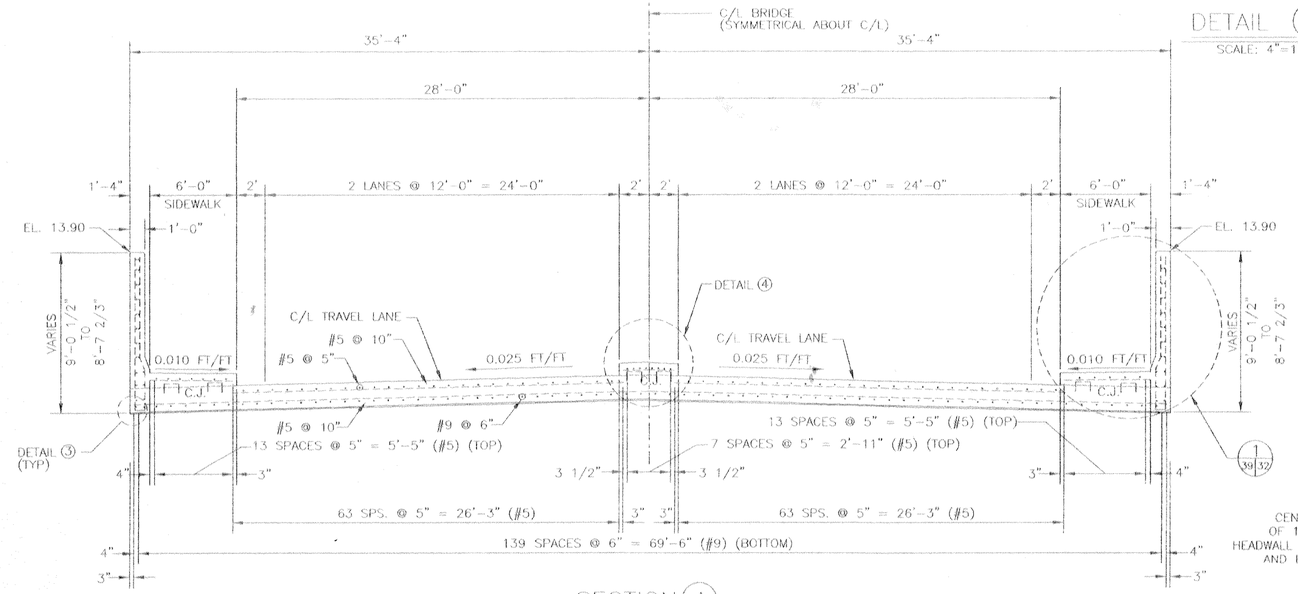

SECTION (A)

SCALE: 1/4"=1'-0"

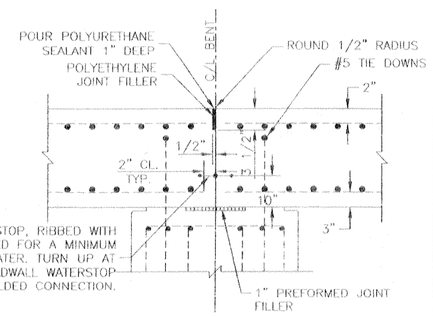

DETAIL (2)

SCALE: 1"=1'-0"

REFERENCE DRAWINGS

FOR GENERAL NOTES, SEE DWG. NO. 4
FOR SPAN LAYOUT, SEE DWG. NO. 17

VALUE ENGINEERING INCENTIVE CLAUSES — YOUR KEY TO HIGHER PROFITS

C·A·D

SCALE: 1" = 1'-0"

12" 0 1' 2' 3' 4' 5'

SCALE: 1/2"=1'-0"

24" 0 2' 4' 6' 8' 10'

SCALE: 4" = 1'-0"

12" 9" 6" 3" 0" 1'

SCALE: 1/4"=1'-0"

24" 12" 0 2' 4' 6' 8' 10'

SYMBOL	DESCRIPTION	DATE	APPROVED
	REVISIONS		

U.S. ARMY ENGINEER DISTRICT, NEW ORLEANS
CORPS OF ENGINEERS
NEW ORLEANS, LOUISIANA

BOARD OF LEVEE COMMISSIONERS
ORLEANS LEVEE DISTRICT
NEW ORLEANS, LOUISIANA

MEYER ENGINEERS, LTD. METAIRIE, LOUISIANA

LAKE PONTCHARTRAIN, LA. AND VICINITY
HIGH LEVEL PLAN

LONDON AVE. OUTFALL CANAL, PARALLEL PROTECTION FLOODPROOFING OF FILMORE AVE. & MIRABEAU AVE. BRIDGES

ORLEANS PARISH, LOUISIANA

MIRABEAU AVE. BRIDGE 20'-0" CONCRETE SLAB SPAN
70'-8" ROADWAY 90° CROSSING
TWO WAY TANGENT CROWN
(SPAN 6)

DESIGNED BY: JCS	DATE: 3-12-01	PLOT SCALE: 1"=4'	PLOT DATE: 6-27-01
DRAWN BY: HL			
CHECKED BY: JCS	CADD FILE: 9362839		FILE NO. H-4-44674
SUBMITTED BY: MEYER ENGINEERS, LTD. DESIGN ENGINEER	SOLICITATION NO. DACW29-01-B-0092		DWG. 39 OF 97

EASTBOUND LANES — FINAL

BFM B/L STATION	C/L PROJECT	INSIDE GUTTER	PROFILE GRADE LINE	EDGE TRAVEL LINE	OUTSIDE GUTTER	EDGE OF SIDEWALK
17+82	*	*	*	*	*	N.A.
18+12	0.20	−0.47	−0.77	−1.07	−1.08	N.A.
18+17	0.52	−0.15	−0.45	−0.75	−0.76	N.A.
18+27	1.17	0.50	0.20	−0.10	−0.11	*
18+37	1.85	1.18	0.88	0.58	0.56	−1.55
18+47	2.53	1.86	1.56	1.26	1.24	−0.72
18+57	3.18	2.51	2.21	1.91	1.89	0.11
18+67	3.80	3.13	2.83	2.53	2.50	0.94
18+77	4.38	3.71	3.41	3.11	3.08	1.77
18+87	4.93	4.26	3.96	3.66	3.63	2.60
18+97	5.45	4.78	4.48	4.18	4.14	3.43
19+07	5.97	5.26	4.96	4.66	4.62	4.26
19+17	6.46	5.71	5.41	5.11	5.07	5.09
19+27	6.92	6.13	5.83	5.53	5.48	5.92
19+37	7.36	6.51	6.21	5.91	5.86	6.75
19+47	7.71	6.86	6.56	6.26	6.21	7.10
19+57	8.03	7.18	6.88	6.58	6.53	7.42
19+67	8.31	7.46	7.16	6.86	6.81	7.70
19+77	8.56	7.71	7.41	7.11	7.06	7.95
19+87	8.78	7.93	7.63	7.33	7.28	8.17
19+97	8.96	8.11	7.81	7.51	7.46	8.35
20+07	9.11	8.26	7.96	7.66	7.61	8.50
20+17	9.23	8.38	8.08	7.78	7.73	8.62
20+27	9.31	8.46	8.16	7.86	7.81	8.70
20+37	9.36	8.51	8.21	7.91	7.86	8.75
20+47	9.38	8.53	8.23	7.93	7.88	8.77
20+57	9.36	8.51	8.21	7.91	7.86	8.75
20+67	9.31	8.46	8.16	7.86	7.81	8.70
20+77	9.23	8.38	8.08	7.78	7.73	8.62
20+87	9.11	8.26	7.96	7.66	7.61	8.50
20+97	8.96	8.11	7.81	7.51	7.46	8.35
21+07	8.78	7.93	7.63	7.33	7.28	8.17
21+17	8.56	7.71	7.41	7.11	7.06	7.95
21+27	8.31	7.46	7.16	6.86	6.81	7.70
21+37	8.03	7.18	6.88	6.58	6.53	7.42
21+47	7.71	6.86	6.56	6.26	6.21	7.10
21+57	7.36	6.51	6.21	5.91	5.86	6.75
21+67	6.92	6.13	5.83	5.53	5.48	5.92
21+77	6.46	5.71	5.41	5.11	5.07	5.09
21+87	5.97	5.26	4.96	4.66	4.62	4.26
21+97	5.45	4.78	4.48	4.18	4.14	3.43
22+07	4.93	4.26	3.96	3.66	3.63	2.60
22+17	4.38	3.71	3.41	3.11	3.08	1.77
22+27	3.80	3.13	2.83	2.53	2.50	0.94
22+37	3.18	2.51	2.21	1.81	1.89	0.11
22+47	2.53	1.86	1.56	1.26	1.24	−0.72
22+57	1.85	1.18	0.88	0.58	0.56	−1.55
22+67	1.17	0.50	0.20	−0.10	−0.11	*
22+77	0.52	−0.15	−0.45	−0.75	−0.76	N.A.
22+87	0.20	−0.47	−0.77	−1.07	−1.08	N.A.
22+97	−1.05	−1.72	−2.02	−2.32	−2.33	N.A.
23+07	−1.89	−2.56	−2.86	−3.16	−3.17	N.A.
23+17	−2.32	−2.99	−3.29	−3.59	−3.60	N.A.
23+27	*	*	*	*	*	N.A.

WESTBOUND LANES — FINAL

BFM B/L STATION	C/L PROJECT	GRADE LINE	PROFILE GRADE LINE	EDGE TRAVEL LINE	OUTSIDE GUTTER	EDGE OF SIDEWALK
17+82	*	*	*	*	*	N.A.
18+12	0.20	−0.47	−0.77	−1.07	−1.08	N.A.
18+17	0.52	−0.15	−0.45	−0.75	−0.76	N.A.
18+27	1.17	0.50	0.20	−0.10	−0.11	N.A.
18+37	1.85	1.18	0.88	0.58	0.56	N.A.
18+47	2.53	1.86	1.56	1.26	1.24	N.A.
18+57	3.18	2.51	2.21	1.91	1.89	N.A.
18+67	3.80	3.13	2.83	2.53	2.50	N.A.
18+77	4.38	3.71	3.41	3.11	3.08	N.A.
18+87	4.93	4.26	3.96	3.66	3.63	N.A.
18+97	5.45	4.78	4.48	4.18	4.14	N.A.
19+07	5.97	5.26	4.96	4.66	4.62	N.A.
19+17	6.46	5.71	5.41	5.11	5.07	N.A.
19+27	6.92	6.13	5.83	5.53	5.48	*
19+37	7.36	6.51	6.21	5.91	5.86	6.75
19+47	7.71	6.86	6.56	6.26	6.21	7.10
19+57	8.03	7.18	6.88	6.58	6.53	7.42
19+67	8.31	7.46	7.16	6.86	6.81	7.70
19+77	8.56	7.71	7.41	7.11	7.06	7.95
19+87	8.78	7.93	7.63	7.33	7.28	8.17
19+97	8.96	8.11	7.81	7.51	7.46	8.35
20+07	9.11	8.26	7.96	7.66	7.61	8.50
20+17	9.23	8.38	8.08	7.78	7.73	8.62
20+27	9.31	8.46	8.16	7.86	7.81	8.70
20+37	9.36	8.51	8.21	7.91	7.86	8.75
20+47	9.38	8.53	8.23	7.93	7.88	8.77
20+57	9.36	8.51	8.21	7.91	7.86	8.75
20+67	9.31	8.46	8.16	7.86	7.81	8.70
20+77	9.23	8.38	8.08	7.78	7.73	8.62
20+87	9.11	8.26	7.96	7.66	7.61	8.50
20+97	8.96	8.11	7.81	7.51	7.46	8.35
21+07	8.78	7.93	7.63	7.33	7.28	8.17
21+17	8.56	7.71	7.41	7.11	7.06	7.95
21+27	8.31	7.46	7.16	6.86	6.81	7.70
21+37	8.03	7.18	6.88	6.58	6.53	7.42
21+47	7.71	6.86	6.56	6.26	6.21	7.10
21+57	7.36	6.51	6.21	5.91	5.86	6.75
21+67	6.92	6.13	5.83	5.53	5.48	*
21+77	6.46	5.71	5.41	5.11	5.07	N.A.
21+87	5.97	5.26	4.96	4.66	4.62	N.A.
21+97	5.45	4.78	4.48	4.18	4.14	N.A.
22+07	4.93	4.26	3.96	3.66	3.63	N.A.
22+17	4.38	3.71	3.41	3.11	3.08	N.A.
22+27	3.80	3.13	2.83	2.53	2.50	N.A.
22+37	3.18	2.51	2.21	1.81	1.89	N.A.
22+47	2.53	1.86	1.56	1.26	1.24	N.A.
22+57	1.85	1.58	0.88	0.58	0.56	N.A.
22+67	1.17	0.50	0.20	−0.10	−0.11	N.A.
22+77	0.52	−0.15	−0.45	−0.75	−0.76	N.A.
22+87	0.20	−0.47	−0.77	−1.07	−1.08	N.A.
22+97	−0.89	−1.56	−1.86	−2.16	−2.17	N.A.
23+07	−1.44	−2.11	−2.41	−2.71	−2.72	N.A.
23+17	−1.95	−2.62	−2.92	−3.22	−3.23	N.A.
23+27	*	*	*	*	*	N.A.

Safety is a Part of Your Contract

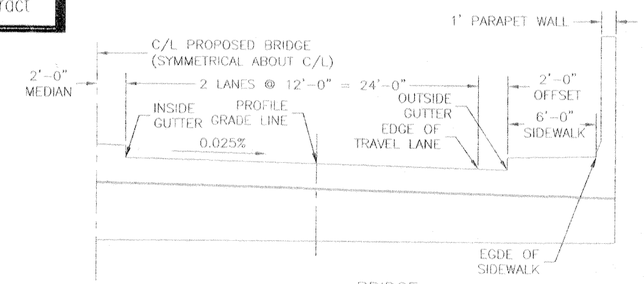

BRIDGE

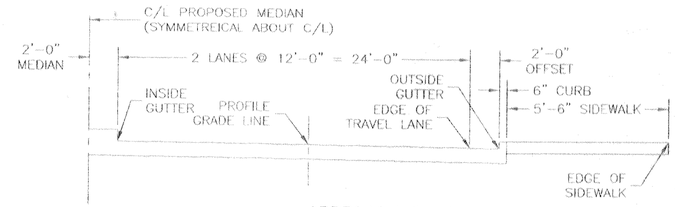

APPROACH SLAB

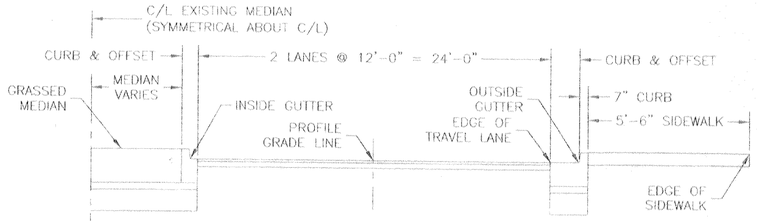

TYPICAL ROADWAY

FINAL ELEVATIONS — KEY PLANS

SCALE: 1/8" = 1'-0"

REFERENCE DRAWINGS
FOR GENERAL NOTES, SEE DWG. NO. 4
FOR PLAN/PROFILE, SEE DWG. NO. 7
FOR PAVEMENT COMPONENTS AND THICKNESSES, SEE DWG. 41

* MATCH EXISTING GRADE

VALUE ENGINEERING INCENTIVE CLAUSES — YOUR KEY TO HIGHER PROFITS

C•A•D

SYMBOL	DESCRIPTION	DATE	APPROVED
	REVISIONS		

U.S. ARMY ENGINEER DISTRICT, NEW ORLEANS
CORPS OF ENGINEERS
NEW ORLEANS, LOUISIANA

BOARD OF LEVEE COMMISSIONERS
ORLEANS LEVEE DISTRICT
NEW ORLEANS, LOUISIANA

MEYER ENGINEERS, LTD. METAIRIE, LOUISIANA
LAKE PONTCHARTRAIN, LA AND VICINITY
HIGH LEVEL PLAN

LONDON AVE. OUTFALL CANAL, PARALLEL PROTECTION FLOODPROOFING OF MIRABEAU AVE. & FILMORE AVE. BRIDGE
ORLEANS PARISH, LOUISIANA

MIRABEAU AVENUE SEALED BRIDGE
ROADWAY ELEVATIONS

DESIGNED BY: JCS	DATE: 3-12-01	PLOT SCALE: 1"=1'	PLOT DATE: 6-27-01
DRAWN BY: MJF	CADD FILE: 9362840		FILE NO. H-4-44674
CHECKED BY: JCS			
SUBMITTED BY: MEYER ENGINEERS, LTD. DESIGN ENGINEER	SOLICITATION NO. DACW29-01-B-0092		DWG: 40 OF 97

Safety is a Part of Your Contract

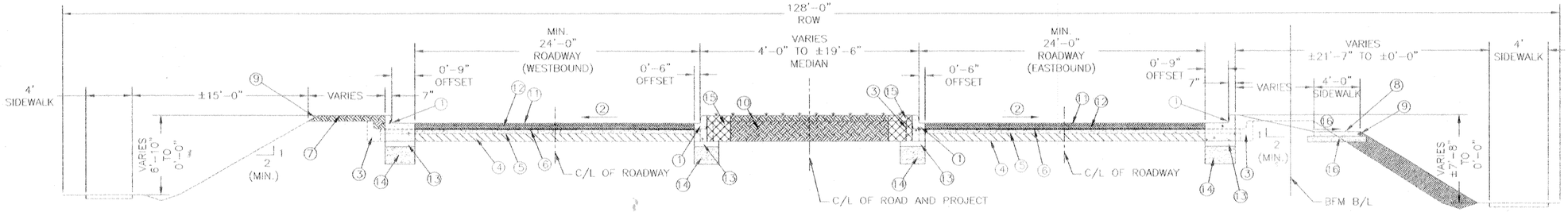

MIRABEAU AVENUE
STA. 17+82 TO 19+37
TYPICAL ROADWAY SECTION

SCALE: 1" = 4'

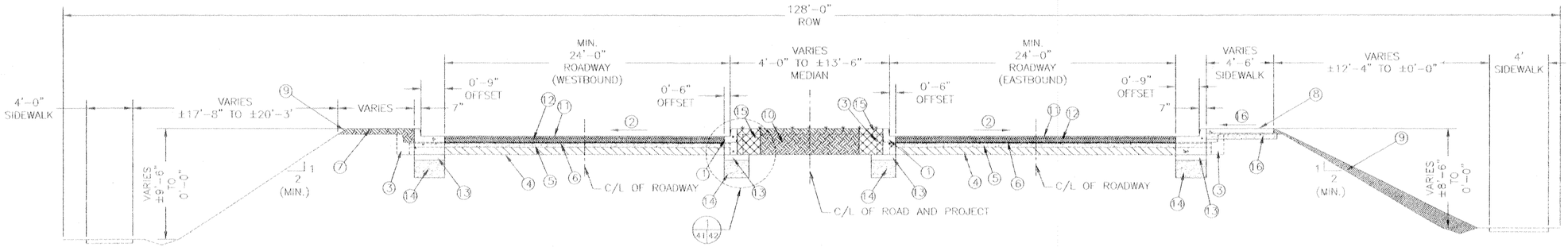

MIRABEAU AVENUE
STA. 21+57 TO 23+27
TYPICAL ROADWAY SECTION

SCALE: 1" = 4'

① REQ'D INTEGRAL BARRIER CURB AND GUTTER *
(8" BARRIER CURB)
FROM STA 18+08 TO STA 19+17 (EASTBOUND LANE)
FROM STA 21+77 TO STA 22+65 (EASTBOUND LANE)
FROM STA 18+16 TO STA 19+17 (WESTBOUND LANE)
FROM STA 12+77 TO STA 22+55 (WESTBOUND LANE)
(CURB VARIES 8" TO 10")
FROM STA 19+17 TO STA 19+37 (EASTBOUND & WESTBOUND LANES)
FROM STA 21+57 TO STA 21+77 (EASTBOUND & WESTBOUND LANES)

② SLOPE VARIES
③ EXISTING 8" BARRIER CURB AND GUTTER
④ EXISTING COMPACTED SHELLS
(APPROX. 8" THICKNESS)
⑤ EXISTING PAVEMENT BASE
(APPROX. 5" THICKNESS)
⑥ EXISTING PAVEMENT SURFACE
(APPROX. 1" THICKNESS)
⑦ REQ'D GRADING TO TOP OF CURB
⑧ REQ'D 4" SIDEWALK
⑨ REQ'D GRADING TO MEET EXIST. ELEVATIONS (1:2 MIN.)
⑩ GRASSED MEDIAN
⑪ REQ'D 2" TYPE 8F WEARING COURSE
⑫ REQ'D TYPE 8F BINDER COURSE **
(THICKNESS VARIES)
⑬ REQ'D 8 1/2" CRUSHED STONE BASE
⑭ REQ'D 18" SAND SUBBASE
⑮ REQ'D EXCAVATION
⑯ SLOPE VARIES (2% MAX.)

* EXISTING CURB AND GUTTER TO REMAIN AT THE FOLLOWING LOCATIONS:
FROM STA 17+82 TO STA 18+08 (EASTBOUND LANE)
FROM STA 22+65 TO STA 23+27 (EASTBOUND LANE)
FROM STA 17+82 TO STA 18+16 (WESTBOUND LANE)
FROM STA 22+55 TO STA 23+23 (WESTBOUND LANE)

** THE BINDER COURSE SHALL BE PROVIDED AS NEEDED TO BRING THE ROADWAY SURFACE AT THE REQ'D ELEVATION.

SCALE: 1" = 4'

24" 12" 0 2' 4' 6' 8' 10'

C-A-D

REFERENCE DRAWINGS

FOR GENERAL NOTES, SEE DWG. NO. 4
FOR PLAN/PROFILE, SEE DWG. NO. 7
FOR DEMOLITION PLAN, SEE DWG. NO. 10
FOR ROADWAY ELEVATIONS, SEE DWG. NO. 40
5FOR TYPICAL ROADWAY AND SIDEWALK DETAILS SEE DWG. NO. 42
FOR ROADWAY CROSS SECTIONS, SEE DWG. NO. 43

SYMBOL	DESCRIPTION	DATE	APPROVED
	REVISIONS		

U.S. ARMY ENGINEER DISTRICT, NEW ORLEANS
CORPS OF ENGINEERS
NEW ORLEANS, LOUISIANA

BOARD OF LEVEE COMMISSIONERS
ORLEANS LEVEE DISTRICT
NEW ORLEANS, LOUISIANA

MEYER ENGINEERS, LTD. METAIRIE, LOUISIANA
LAKE PONTCHARTRAIN, LA. AND VICINITY
HIGH LEVEL PLAN

LONDON AVE. OUTFALL CANAL, PARALLEL PROTECTION FLOODPROOFING OF MIRABEAU AVE. & FILMORE AVE. BRIDGES
ORLEANS PARISH, LOUISIANA

MIRABEAU AVENUE SEALED BRIDGE TYPICAL ROADWAY SECTIONS

DESIGNED BY: JCS	DATE: 3-12-01	PLOT SCALE: 1"=4'	PLOT DATE: 6-27-01
DRAWN BY: MJF	CADD FILE: 9362841		FILE NO: H-4-44674
CHECKED BY: JCS			
SUBMITTED BY: MEYER ENGINEERS, LTD. DESIGN ENGINEER	SOLICITATION NO. DACW29-01-B-0092		DWG. 41 OF 97

VALUE ENGINEERING INCENTIVE CLAUSES — YOUR KEY TO HIGHER PROFITS

Safety is a Part of Your Contract

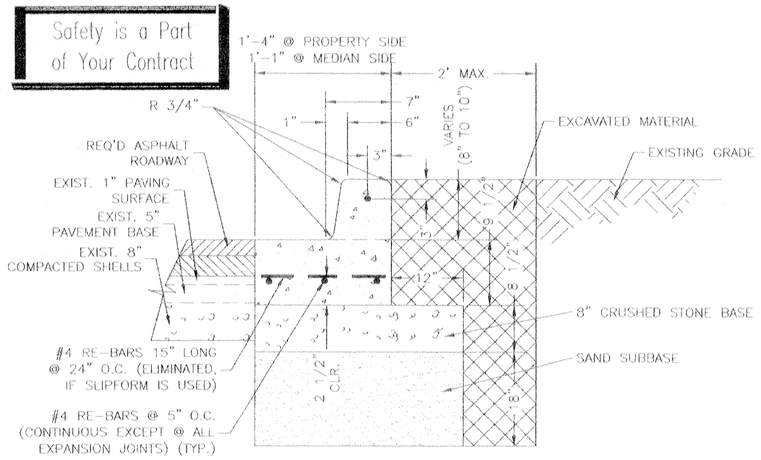

BARRIER CURB & GUTTERBOTTOM

SCALE: N.T.S.

DETAIL 1/40|41

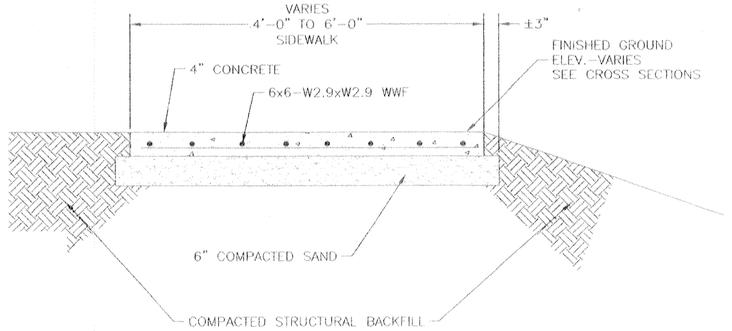

TYPICAL SIDEWALK SECTION

SCALE: N.T.S.

NOTES:
1. REQUIRED WALKS TO BE CONSTRUCTED TO GRADES AS SHOWN ON ROADWAY ELEVATIONS SHEET.

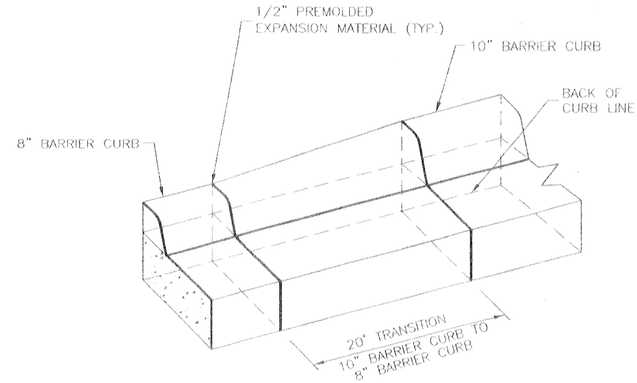

8" BARRIER CURB - 10" BARRIER CURB TRANSITION

SCALE: N.T.S.

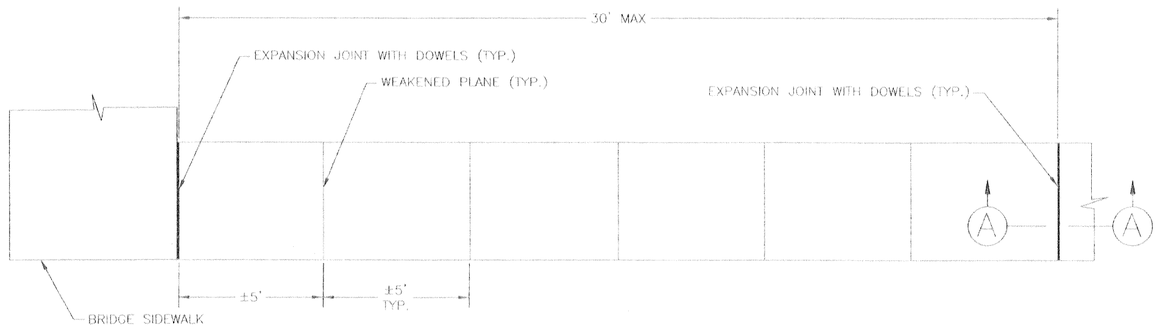

PLAN

SCALE: N.T.S.

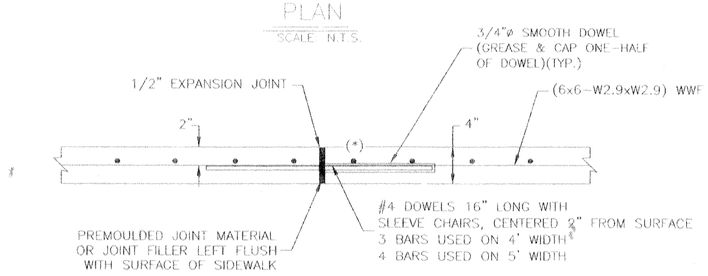

SECTION A

SCALE: N.T.S.

(*) THIS HALF OF DOWEL SHALL BE GREASED UNLESS PLASTIC OR EPOXY COATED DOWEL IS USED.

PORTLAND CEMENT CONCRETE SIDEWALK PAVEMENT

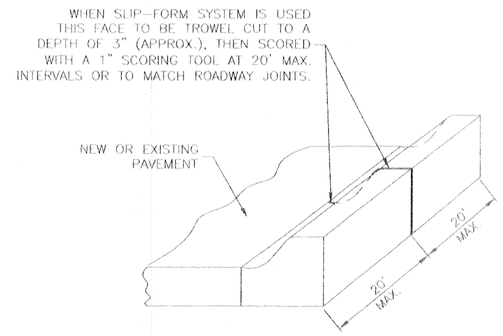

DETAIL SHOWING JOINTS IN CONCRETE CURB AND GUTTER

SCALE: N.T.S.

REFERENCE DRAWINGS

FOR GENERAL NOTES, SEE DWG. NO. 4
FOR PLAN/PROFILE, SEE DWG. NO. 7
FOR DEMOLITION PLAN, SEE DWG. NO. 10
FOR TYPICAL ROADWAY SECTIONS, SEE DWG. NO. 41

SYMBOL	DESCRIPTION	DATE	APPROVED
	REVISIONS		

U.S. ARMY ENGINEER DISTRICT, NEW ORLEANS
CORPS OF ENGINEERS
NEW ORLEANS, LOUISIANA

BOARD OF LEVEE COMMISSIONERS
ORLEANS LEVEE DISTRICT
NEW ORLEANS, LOUISIANA

MEYER ENGINEERS, LTD. METAIRIE, LOUISIANA
LAKE PONTCHARTRAIN, LA. AND VICINITY
HIGH LEVEL PLAN

LONDON AVE. OUTFALL CANAL, PARALLEL PROTECTION FLOODPROOFING OF MIRABEAU AVE. & FILMORE AVE. BRIDGES
ORLEANS PARISH, LOUISIANA

MIRABEAU AVENUE SEALED BRIDGE TYP. ROADWAY AND SIDEWALK DETAILS

DESIGNED BY: JCS	DATE: 3-12-01	PLOT SCALE: 1"=1'	PLOT DATE: 6-27-01
DRAWN BY: MJF			
CHECKED BY: JCS	CADD FILE: 936842		FILE NO. H-4-44674
SUBMITTED BY: MEYER ENGINEERS, LTD. DESIGN ENGINEER	SOLICITATION NO: DACW29-01-B-0092		DWG: 42 OF 97

VALUE ENGINEERING INCENTIVE CLAUSES YOUR KEY TO HIGHER PROFITS

Safety is a Part of Your Contract

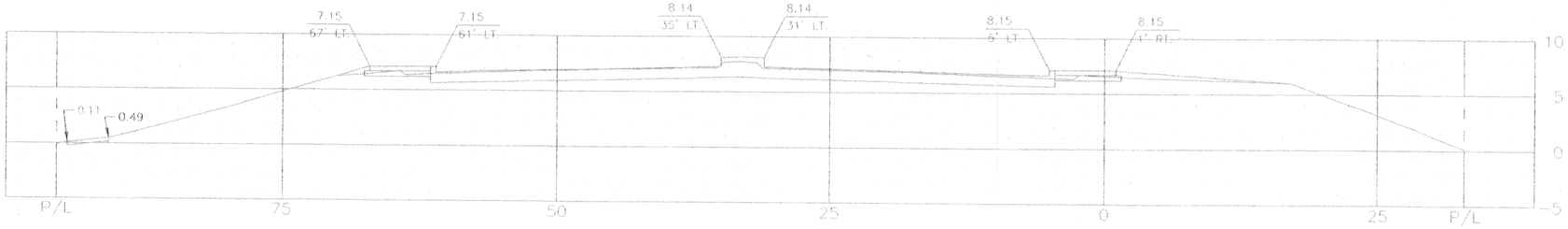

STA 19+50

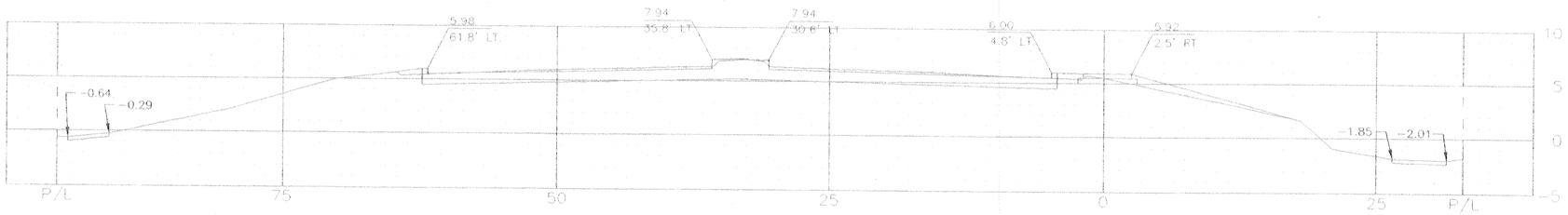

STA 19+25

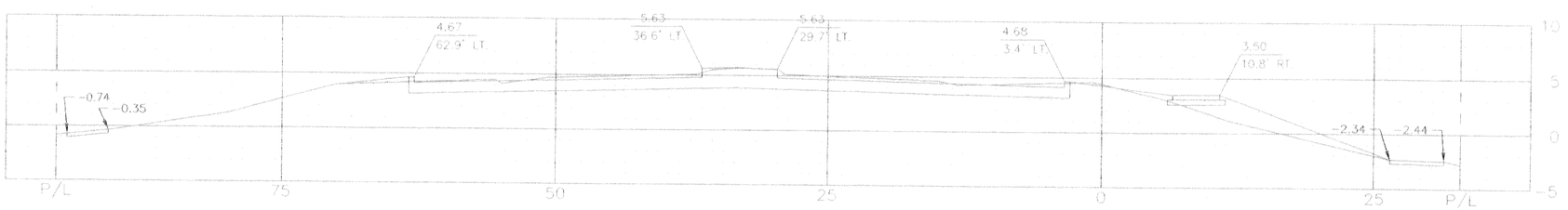

STA 19+00

MIRABEAU AVENUE

SCALE: 1" = 5'- 0"

5' 0 5' 10' 20' 30' 40'

VALUE ENGINEERING INCENTIVE CLAUSES — YOUR KEY TO HIGHER PROFITS

C·A·D

SYMBOL	DESCRIPTION	DATE	APPROVED
	REVISIONS		

U.S. ARMY ENGINEER DISTRICT, NEW ORLEANS
CORPS OF ENGINEERS
NEW ORLEANS, LOUISIANA

BOARD OF LEVEE COMMISSIONERS
ORLEANS LEVEE DISTRICT
NEW ORLEANS, LOUISIANA

MEYER ENGINEERS, LTD. METAIRIE, LOUISIANA

LAKE PONTCHARTRAIN, LA. AND VICINITY
HIGH LEVEL PLAN

LONDON AVE. OUTFALL CANAL, PARALLEL PROTECTION FLOODPROOFING OF MIRABEAU AVE. & FILMORE AVE. BRIDGES
ORLEANS PARISH, LOUISIANA

MIRABEAU AVENUE SEALED BRIDGE ROADWAY CROSS SECTIONS

DESIGNED BY: JCS	DATE: 3-12-01	PLOT SCALE: 1"=10'	PLOT DATE: 6-27-01
DRAWN BY: MJF			
CHECKED BY: JCS	CADD FILE: 9362043A		FILE NO. H-4-44674
SUBMITTED BY: MEYER ENGINEERS, LTD. DESIGN ENGINEER	SOLICITATION NO. DACW29-01-B-0092		DWG. 43A OF 97

Safety is a Part of Your Contract

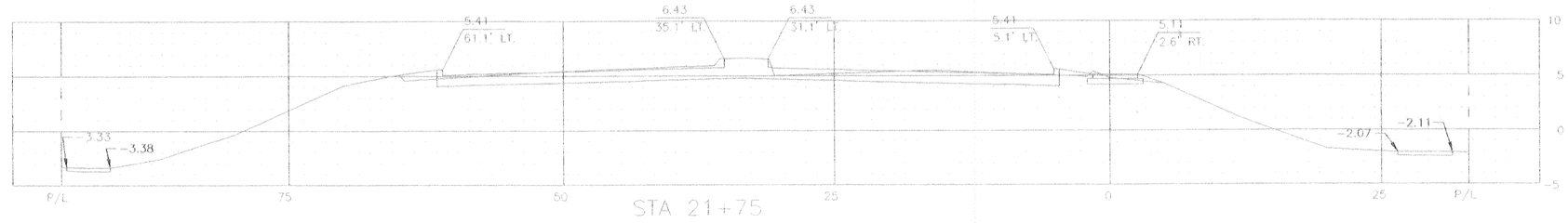

STA 21+75

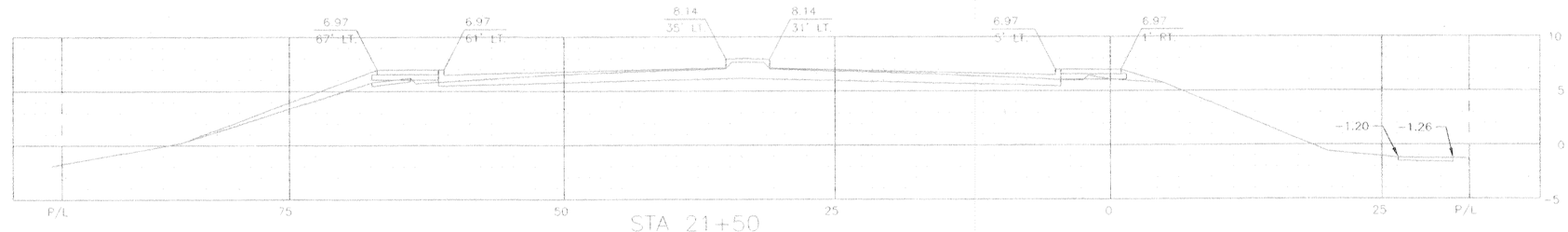

STA 21+50

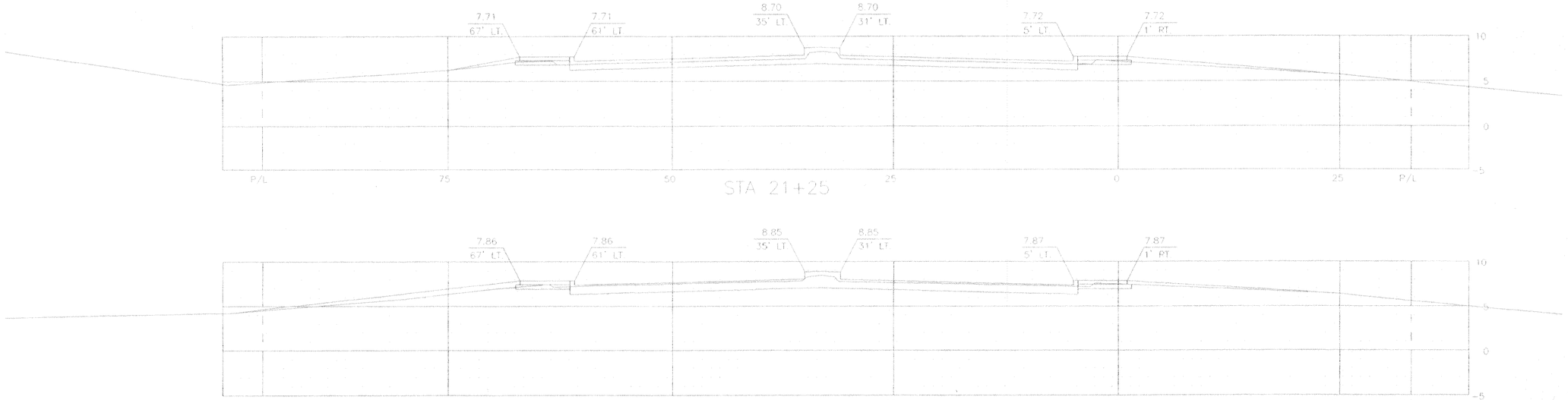

STA 21+25

STA 19+75

MIRABEAU AVENUE

SCALE: 1" = 5'- 0"

5' 0 5' 10' 20' 30' 40'

VALUE ENGINEERING — INCENTIVE CLAUSES — YOUR KEY TO HIGHER PROFITS

C-A-D

SYMBOL	DESCRIPTION	DATE	APPROVED
	REVISIONS		

U.S. ARMY ENGINEER DISTRICT, NEW ORLEANS
CORPS OF ENGINEERS
NEW ORLEANS, LOUISIANA

BOARD OF LEVEE COMMISSIONERS
ORLEANS LEVEE DISTRICT
NEW ORLEANS, LOUISIANA

MEYER ENGINEERS, LTD. METAIRIE, LOUISIANA
LAKE PONTCHARTRAIN, LA. AND VICINITY
HIGH LEVEL PLAN

LONDON AVE. OUTFALL CANAL, PARALLEL PROTECTION FLOODPROOFING OF MIRABEAU AVE. & FILMORE AVE. BRIDGES
ORLEANS PARISH, LOUISIANA

MIRABEAU AVENUE SEALED BRIDGE ROADWAY CROSS SECTIONS

DESIGNED BY: JCS	DATE: 3-12-01	PLOT SCALE: 1"=20'	PLOT DATE: 6-27-01
DRAWN BY: MJF			
CHECKED BY: JCS	CADD FILE: 93628430		FILE NO. H-4-44674
SUBMITTED BY: MEYER ENGINEERS, LTD. DESIGN ENGINEER	SOLICITATION NO. DACW29-01-B-0092		DWG. 43B OF 97

Safety is a Part of Your Contract

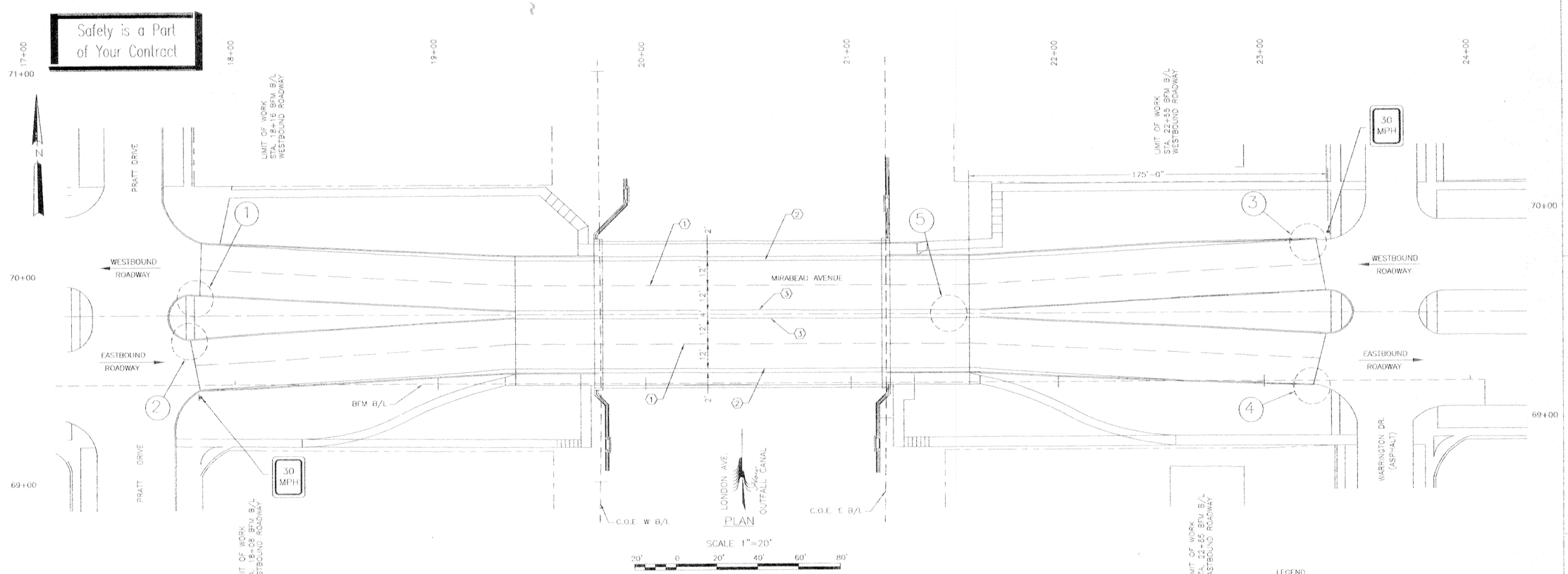

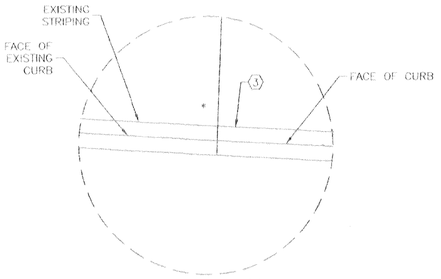

SECTION (1)
SCALE: 1" = 10' - 0"

* MATCH EXISTING STRIPING

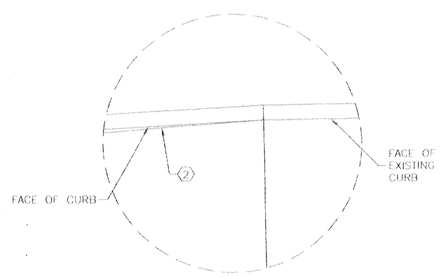

SECTION (3)
SCALE: 1" = 10' - 0"

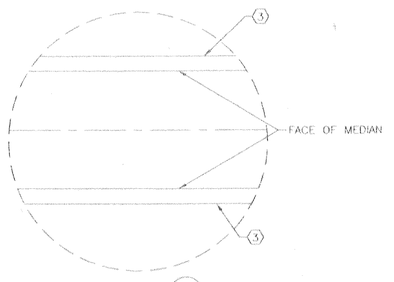

SECTION (5)
SCALE: 1" = 10' - 0"

* MATCH EXISTING STRIPING

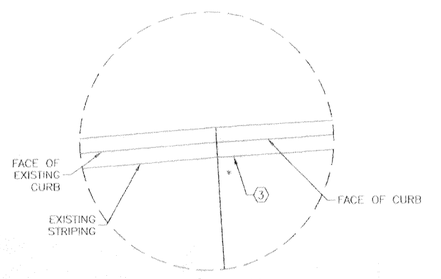

SECTION (2)
SCALE: 1" = 10' - 0"

* MATCH EXISTING STRIPING

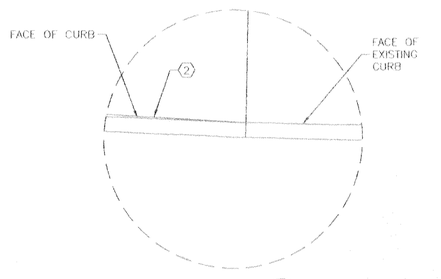

SECTION (4)
SCALE: 1" = 10' - 0"

LEGEND

(1) 4" BROKEN WHITE LINE (15' LINE, 25' SKIP PATTERN)

(2) 4" SOLID WHITE LINE

(3) 4" SOLID YELLOW LINE

NOTES:
1. ALL PAVEMENT MARKINGS SHALL BE INSTALLED AS PER THE MANUAL ON UNIFORM TRAFFIC CONTROL DEVICES.

2. ALL PAVEMENT MARKINGS SHALL BE PREFORMED PLASTIC OR HOT APPLIED PAINT.

REFERENCE DRAWINGS
FOR GENERAL NOTES, SEE DWG. 4
FOR PLAN/PROFILE, SEE DWG. 7

SYMBOL	DESCRIPTION	DATE	APPROVED
	REVISIONS		

U.S. ARMY ENGINEER DISTRICT, NEW ORLEANS
CORPS OF ENGINEERS
NEW ORLEANS, LOUISIANA

BOARD OF LEVEE COMMISSIONERS
ORLEANS LEVEE DISTRICT
NEW ORLEANS, LOUISIANA

MEYER ENGINEERS, LTD. METAIRIE, LOUISIANA

LAKE PONTCHARTRAIN, LA. AND VICINITY
HIGH LEVEL PLAN
LONDON AVE. OUTFALL CANAL, PARALLEL PROTECTION FLOODPROOFING OF MIRABEAU AVE. & FILMORE AVE. BRIDGES
ORLEANS PARISH, LOUISIANA

MIRABEAU AVENUE SEALED BRIDGE PERMANENT PAVEMENT MARKINGS

DESIGNED BY: JCS	DATE: 3-12-01	PLOT SCALE: 1"=20'	PLOT DATE: 6-27-01
DRAWN BY: MJF			
CHECKED BY: JCS	CADD FILE: 9362044		FILE NO. H-4-44674
SUBMITTED BY: MEYER ENGINEERS, LTD. DESIGN ENGINEER	SOLICITATION NO. DACW29-01-B-0092		DWG. 44 OF 97

VALUE ENGINEERING INCENTIVE CLAUSES — YOUR KEY TO HIGHER PROFITS

C•A•D

Safety is a Part of Your Contract

P.I. STA. 101+12.99
C.O.E. WEST BASELINE
(NOT FOUND)

P.I. STA. 99+96.67
C.O.E. WEST BASELINE
(NOT FOUND)

SQ. 4 | SQ. 5 | SQ. 6 | SQ. 5

PRATT DRIVE (64' R.O.W.)

LONDON OUTFALL CANAL (194' R.O.W.)

WARRINGTON DRIVE (48.68' A. 50' R.O.W.)

FILMORE AVENUE (120' R.O.W.)

PROPERTY OF GUADALUPE SUAREZ YODER COB 722/495

PROPERTY OF PATRICK JAMES BARBARO & STACEY ANN ZUNDEL C/# 68648

PROPERTY OF SHIRLEY TAYLOR RICHARDSON C/# 129258

PROPERTY OF LYNDA CRESSON

PROPERTY OF WORLD WIDE TRADE, INC. C/# 67848

PROPERTY OF IDA PETTY COB 720/394

PROPERTY OF FLORITA HESLIN COB 783/424

PROPERTY OF DORIS CRIER COB 720/530

PROPERTY OF MARK ANTHONY ROE & DANIEL PAUL BRAUD C/# 6712

PROPERTY OF JOHN FRANK STOPA & STANLEY BARNES STOPA COB 758/619

PROPERTY OF DOROTHY ELSA SCHERT COB 688/210

PROPERTY OF GWENDOLYN KERR BIERRIA C/# 92783

PROPERTY OF CORA L. JOUBERT COB 614/695

LIMITS OF CONSTRUCTION UNTIL ROADWAY TIE IN INTO EXISTING FILMORE AVENUE IS TO COMMENCE

LIMITS OF CONSTRUCTION AND TEMPORARY CONSTRUCTION EASEMENT

LIMITS OF ROADWAY OVERLAY STA 17+70 (BFM BASELINE "B")

LIMITS OF ROADWAY OVERLAY STA 17+67 SURVEY BASELINE "B"

LIMITS OF CONSTRUCTION AND EXIST. RIGHT-OF-WAY

REQ'D NEW PERMANENT FLOOD CONTROL EASEMENT

EQUATION: CORPS OF ENGINEERS WEST BASELINE STA. 85+52.64 = BFM BASELINE "B" STA. 20+81.68

EQUATION: CORPS OF ENGINEERS EAST BASELINE STA. 85+21.92 = SURVEY BASELINE STA. 22+67.98

SECURITY FENCE

BFM BASELINE "A" N85°25'03"E

BFM BASELINE "B" N85°25'03"E

N85°25'03"E BFM BASELINE "B"

P.I. STA. 84+94.52 C.O.E. WEST BASELINE

P.I. STA. 84+71.30 C.O.E. EAST BASELINE

P.I. STA. 84+02.42 C.O.E. EAST BASELINE

P.I. STA. 69+40.25 C.O.E. WEST BASELINE

P.I. STA. 69+15.97 C.O.E. WEST BASELINE

2' THICK FLOODWALL

BRIDGE

LONDON AVE. OUTFALL CANAL

MIRABEAU AVENUE

PROPERTY CORNERS

WEST SIDE		EAST SIDE	
STATION	DISTANCE MEASURED FROM WB/L	STATION	DISTANCE MEASURED FROM EB/L
87+15.23	20.67 LT	86+54.51	21.73 RT
85+95.23	21.19 LT	85+64.51	22.11 RT
84+75.28	21.75 LT	84+44.43	22.52 RT
83+55.28	22.54 LT	83+24.43	22.58 RT

VALUE ENGINEERING — INCENTIVE CLAUSES TO ENGINEER — YOUR KEY TO HIGHER PROFITS

GRAPHIC SCALE
(IN FEET)
1 inch = 20 ft.

NOTE:
1.) ALL NEW, REQUIRED, TEMPORARY AND PERMANENT RIGHTS-OF-WAY ARE LOCATED WITHIN EXISTING PUBLIC RIGHTS-OF-WAY.
2.) NO TREES ARE TO BE DISTURBED FOR THIS PROJECT.

C-A-D

SYMBOL	DESCRIPTION	DATE	APPROVED
	ADDED EXIST. TOPO, NEW CONSTRUCTION	1/12/98	
	ADJUSTED SCALE, ADDED BEARINGS, DIST.	0/29/98	

REVISIONS

U.S. ARMY ENGINEER DISTRICT, NEW ORLEANS
CORPS OF ENGINEERS
NEW ORLEANS, LOUISIANA

BOARD OF LEVEE COMMISSIONERS
ORLEANS LEVEE DISTRICT
NEW ORLEANS, LOUISIANA

MEYER ENGINEERS, LTD. METAIRIE, LOUISIANA

LAKE PONTCHARTRAIN, LA. AND VICINITY
HIGH LEVEL PLAN

LONDON AVE. OUTFALL CANAL, PARALLEL PROTECTION FLOODPROOFING OF FILMORE AVE. & MIRABEAU AVE. BRIDGES
ORLEANS PARISH, LOUISIANA

FILMORE AVENUE SEALED BRIDGE RIGHTS-OF-WAY PLAN & CONSTRUCTION EASEMENT

DESIGNED BY: JCS	DATE: 3-12-01	PLOT SCALE: 1"=20'	PLOT DATE: 6-27-01
DRAWN BY: MJF	CADD FILE: 9362845		FILE NO. H-4-44674
CHECKED BY: JCS	SOLICITATION NO. DACW29-01-B-0092		DWG. 45 OF 97
SUBMITTED BY: MEYER ENGINEERS, LTD. DESIGN ENGINEER			

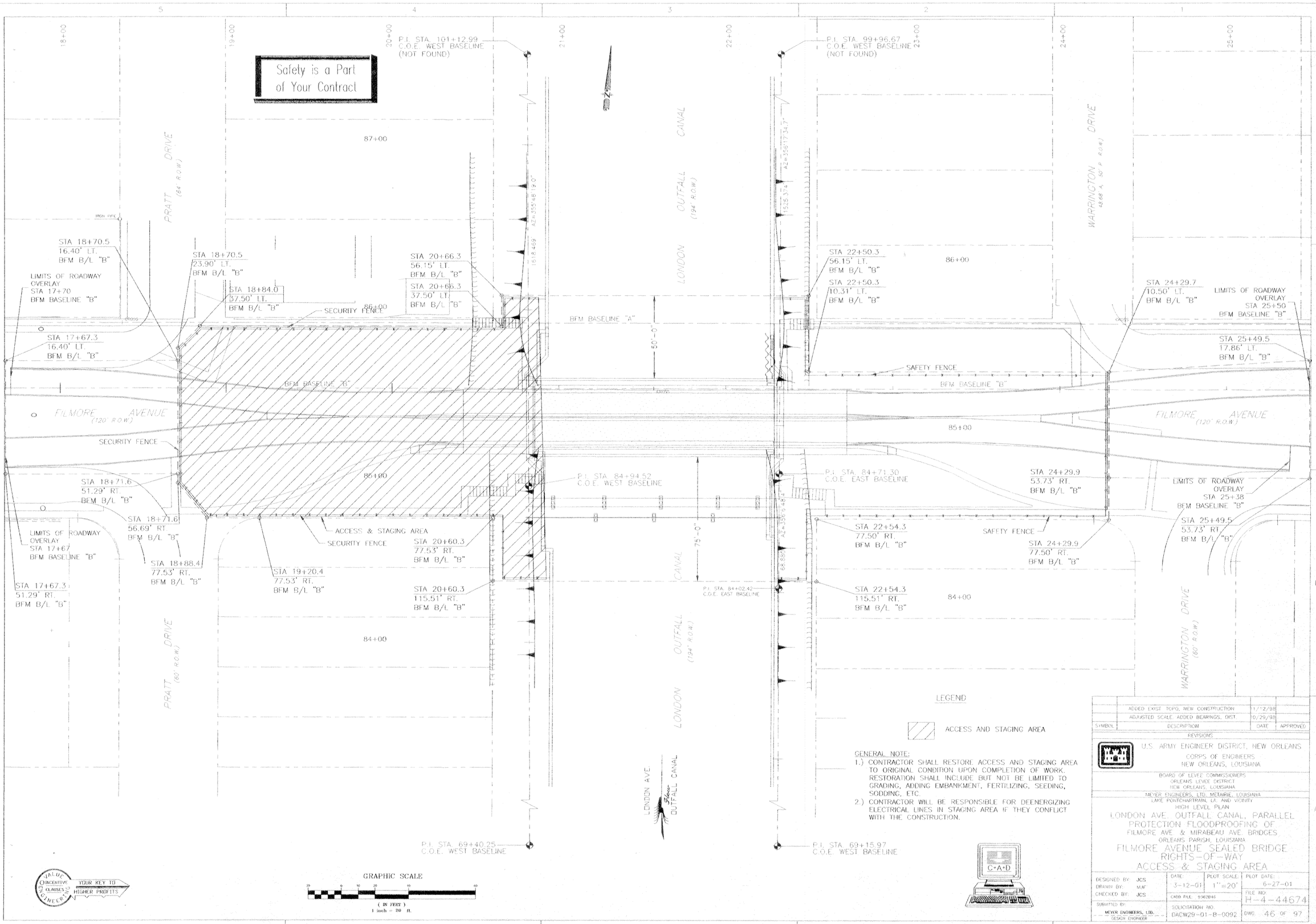

Safety is a Part of Your Contract
P.I. STA. 101+12.99 C.O.E. WEST BASELINE (NOT FOUND)
P.I. STA. 99+96.67 C.O.E. WEST BASELINE (NOT FOUND)
PRATT DRIVE (64' R.O.W.)
LONDON OUTFALL CANAL (194' R.O.W.)
WARRINGTON DRIVE
STA 18+70.5 16.40' LT. BFM B/L "B"
STA 18+70.5 23.90' LT. BFM B/L "B"
STA 18+84.0 37.50' LT. BFM B/L "B"
STA 20+66.3 56.15' LT. BFM B/L "B"
STA 20+66.3 37.50' LT. BFM B/L "B"
STA 22+50.3 56.15' LT. BFM B/L "B"
STA 22+50.3 10.31' LT. BFM B/L "B"
STA 24+29.7 10.50' LT. BFM B/L "B"
LIMITS OF ROADWAY OVERLAY STA 17+70 BFM BASELINE "B"
LIMITS OF ROADWAY OVERLAY STA 25+50 BFM BASELINE "B"
STA 17+67.3 16.40' LT. BFM B/L "B"
STA 25+49.5 17.86' LT. BFM B/L "B"
SECURITY FENCE
SAFETY FENCE
BFM BASELINE "A"
BFM BASELINE "B"
50'-0"
75'-0"
FILMORE AVENUE (120' R.O.W.)
STA 18+71.6 51.29' RT. BFM B/L "B"
STA 18+71.6 56.69' RT. BFM B/L "B"
STA 18+88.4 77.53' RT. BFM B/L "B"
STA 19+20.4 77.53' RT. BFM B/L "B"
STA 20+60.3 77.53' RT. BFM B/L "B"
STA 20+60.3 115.51' RT. BFM B/L "B"
STA 17+67.3 51.29' RT. BFM B/L "B"
STA 24+29.9 53.73' RT. BFM B/L "B"
STA 24+29.9 77.50' RT. BFM B/L "B"
STA 25+49.5 53.73' RT. BFM B/L "B"
STA 22+54.3 77.50' RT. BFM B/L "B"
STA 22+54.3 115.51' RT. BFM B/L "B"
P.I. STA. 84+94.52 C.O.E. WEST BASELINE
P.I. STA. 84+71.30 C.O.E. EAST BASELINE
P.I. STA. 84+02.42 C.O.E. EAST BASELINE
ACCESS & STAGING AREA
LIMITS OF ROADWAY OVERLAY STA 17+67 BFM BASELINE "B"
LIMITS OF ROADWAY OVERLAY STA 25+38 BFM BASELINE "B"
LONDON AVE. OUTFALL CANAL
P.I. STA. 69+40.25 C.O.E. WEST BASELINE
P.I. STA. 69+15.97 C.O.E. WEST BASELINE
87+00
86+00
85+00
84+00
LEGEND
ACCESS AND STAGING AREA
GENERAL NOTE:
1.) CONTRACTOR SHALL RESTORE ACCESS AND STAGING AREA TO ORIGINAL CONDITION UPON COMPLETION OF WORK. RESTORATION SHALL INCLUDE BUT NOT BE LIMITED TO GRADING, ADDING EMBANKMENT, FERTILIZING, SEEDING, SODDING, ETC.
2.) CONTRACTOR WILL BE RESPONSIBLE FOR DEENERGIZING ELECTRICAL LINES IN STAGING AREA IF THEY CONFLICT WITH THE CONSTRUCTION.
GRAPHIC SCALE
(IN FEET)
1 inch = 20 ft.
VALUE ENGINEERING INCENTIVE CLAUSES
YOUR KEY TO HIGHER PROFITS
C·A·D
ADDED EXIST. TOPO, NEW CONSTRUCTION 1/12/98
ADJUSTED SCALE, ADDED BEARINGS, DIST. 10/29/98
SYMBOL DESCRIPTION DATE APPROVED
REVISIONS
U.S. ARMY ENGINEER DISTRICT, NEW ORLEANS
CORPS OF ENGINEERS
NEW ORLEANS, LOUISIANA
BOARD OF LEVEE COMMISSIONERS
ORLEANS LEVEE DISTRICT
NEW ORLEANS, LOUISIANA
MEYER ENGINEERS, LTD. METAIRIE, LOUISIANA
LAKE PONTCHARTRAIN, LA. AND VICINITY
HIGH LEVEL PLAN
LONDON AVE. OUTFALL CANAL, PARALLEL PROTECTION FLOODPROOFING OF FILMORE AVE. & MIRABEAU AVE. BRIDGES
ORLEANS PARISH, LOUISIANA
FILMORE AVENUE SEALED BRIDGE
RIGHTS-OF-WAY
ACCESS & STAGING AREA
DESIGNED BY: JCS
DRAWN BY: MJF
CHECKED BY: JCS
DATE: 3-12-01
PLOT SCALE: 1"=20'
PLOT DATE: 6-27-01
CADD FILE: 9362846
FILE NO. H-4-44674
SUBMITTED BY: MEYER ENGINEERS, LTD. DESIGN ENGINEER
SOLICITATION NO. DACW29-01-B-0092
DWG. 46 OF 97

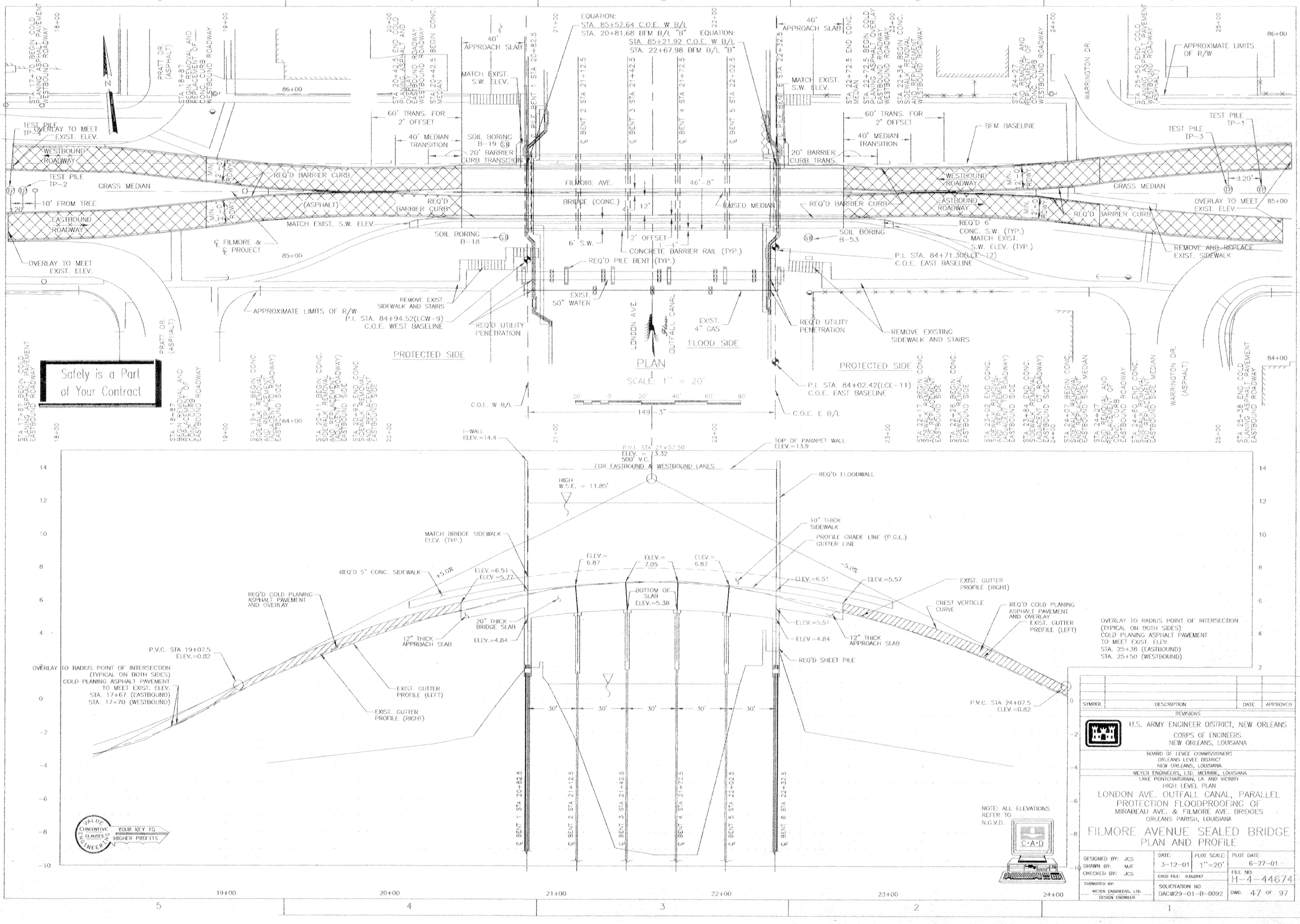

SYMBOL	DESCRIPTION	DATE	APPROVED
	REVISIONS		

U.S. ARMY ENGINEER DISTRICT, NEW ORLEANS
CORPS OF ENGINEERS
NEW ORLEANS, LOUISIANA

BOARD OF LEVEE COMMISSIONERS
ORLEANS LEVEE DISTRICT
NEW ORLEANS, LOUISIANA

MEYER ENGINEERS, LTD. METAIRIE, LOUISIANA
LAKE PONTCHARTRAIN, LA. AND VICINITY

HIGH LEVEL PLAN

LONDON AVE. OUTFALL CANAL, PARALLEL PROTECTION FLOODPROOFING OF MIRABEAU AVE. & FILMORE AVE. BRIDGES
ORLEANS PARISH, LOUISIANA

FILMORE AVENUE SEALED BRIDGE PLAN AND PROFILE

DESIGNED BY: JCS	DATE: 3-12-01	PLOT SCALE: 1"=20'	PLOT DATE: 6-27-01
DRAWN BY: MJF			
CHECKED BY: JCS	CADD FILE: 9362B47		FILE NO. H-4-44674
SUBMITED BY: MEYER ENGINEERS, LTD. DESIGN ENGINEER	SOLICITATION NO. DACW29-01-B-0092		DWG. 47 OF 97

TRAFFIC CONTROL NOTES

Safety is a Part of Your Contract

1. THE DESIGN AND APPLICATION OF ALL SIGNALS , PAVEMENT MARKINGS, CHANNELIZING DEVICES, AND WARNING SIGNS SHALL CONFORM TO "MANUAL ON UNIFORM TRAFFIC CONTROL DEVICES", 1988 EDITION AS REVISED.
2. CHANNELIZING AND DELINEATION DEVICES SHALL BE USED TO MARK ALL CONSTRUCTION AREAS. THESE SHALL BE TYPE III BARRICADES, AND/OR BARRELS, ALL FULLY REFLECTORIZED WITH FLASHING LIGHTS.
3. ANY EXISTING TRAFFIC CONTROL DEVICE THAT IS NOT REQUIRED SHALL IMMEDIATELY BE REMOVED, COVERED AND/OR RELOCATED.
4. SIGNS, BARRELS, BARRICADES, STRIPING, BARRIERS AND ALL OTHER TRAFFIC CONTROL DEVICES SHOWN ON THESE DRAWINGS ARE REQUIRED FOR CONSTRUCTION OF THE PROJECT AND SHALL BE PROVIDED AND MAINTAINED BY THE CONTRACTOR.
5. ALL CONSTRUCTION MATERIAL AND EQUIPMENT SHALL BE STORED OUTSIDE OF THE ROADWAY SURFACE, CREATING NO SIGHT DISTANCE PROBLEMS, AND FULLY DELINEATED AS IN NOTE 2.
6. YELLOW, HIGH VISIBILITY PENNANT BARRIER FLAGGING (NYLON ROPE WITH PLASTIC PENNANTS) SHALL BE STRUNG BETWEEN TYPE III BARRICADES AND BARRELS/DRUMS. YELLOW PENNANT FLAGGING SHALL BE USED ONLY WHERE PEDESTRIAN ACTIVITY IS TO BE PROHIBITED. THIS MATERIAL SHALL BE USED OR PLACED NEAR VEHICULAR TRAFFIC LANES OR USED TO WARN OR DIRECT VEHICULAR TRAFFIC.
7. THIS TRAFFIC CONTROL DEVICE PLAN INDICATES GENERAL TRAFFIC CONTROL DEVICES TO BE USED ON THIS PROJECT. IT IS ANTICIPATED THAT CONDITIONS WILL VARY DEPENDING ON THE PHASE UNDER CONSTRUCTION AND THAT THE ARRANGEMENT OF THOSE DEVICES WILL BE REVIEWED ON A DAY TO DAY BASIS.
8. ALL EXCAVATION SHALL BE COVERED, BACKFILLED, OR PROTECTED AND FULLY DELINEATED (SEE NOTE 2) AT NIGHT AND WHEN WORK IS NOT IN PROGRESS. EXCAVATION PITS, ETC. SHALL BE FULLY FENCED OR BARRICADED (SEE NOTE 2) TO PREVENT ACCESS BY PEDESTRIANS.
9. ALL TRAFFIC SIGNS SHALL BE STAKED OUT BY THE CONTRACTOR IN ACCORDANCE WITH THE TRAFFIC CONTROL PLAN AND APPROVED BY THE CONTRACTING OFFICER PRIOR TO INSTALLATION.
10. THIS PLAN IS PREPARED FOR GUIDANCE. CONTRACTOR SHALL SUBMIT A TRAFFIC CONTROL DEVICE PLAN TO CITY OF NEW ORLEANS, DEPT. OF PUBLIC WORKS FOR THEIR APPROVAL. THE TRAFFIC CONTROL DEVICE PLAN SHALL BE PREPARED BY PROFESSIONAL ENGINEERS.

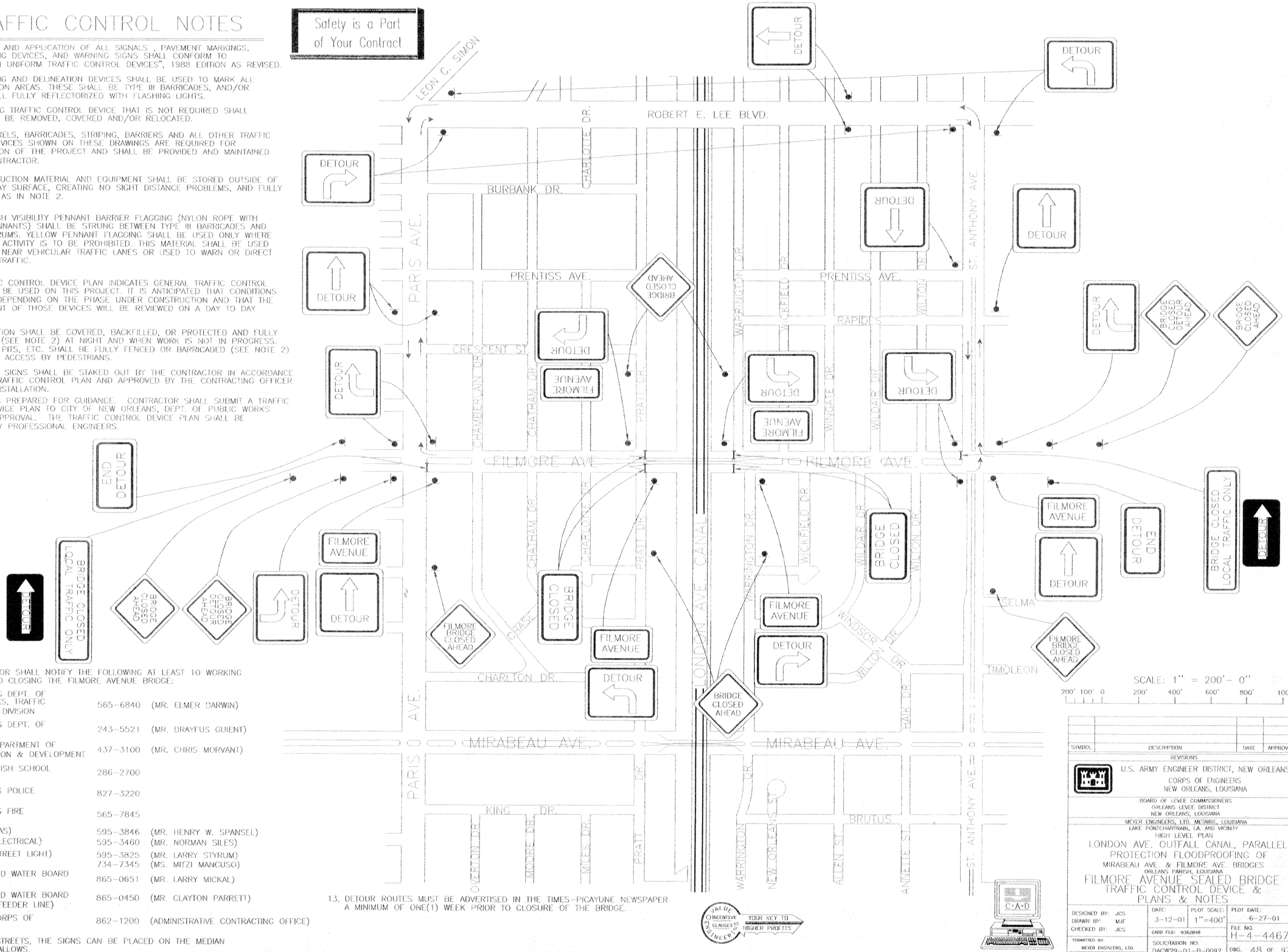

11. THE CONTRACTOR SHALL NOTIFY THE FOLLOWING AT LEAST 10 WORKING DAYS PRIOR TO CLOSING THE FILMORE AVENUE BRIDGE:

· NEW ORLEANS DEPT. OF PUBLIC WORKS, TRAFFIC ENGINEERING DIVISION	565-6840	(MR. ELMER DARWIN)
· NEW ORLEANS DEPT. OF UTILITIES	243-5521	(MR. DRAYFUS GUIENT)
· LOUISIANA DEPARTMENT OF TRANSPORTATION & DEVELOPMENT	437-3100	(MR. CHRIS MORVANT)
· ORLEANS PARISH SCHOOL BOARD	286-2700	
· NEW ORLEANS POLICE DEPARTMENT	827-3220	
· NEW ORLEANS FIRE DEPARTMENT	565-7845	
· ENTERGY (GAS)	595-3846	(MR. HENRY W. SPANSEL)
· ENTERGY (ELECTRICAL)	595-3460	(MR. NORMAN SILES)
· ENTERGY (STREET LIGHT)	595-3825	(MR. LARRY STYRUM)
· COX CABLE	734-7345	(MS. MITZI MANCUSO)
· SEWERAGE AND WATER BOARD (UTILITIES)	865-0651	(MR. LARRY MICKAL)
· SEWERAGE AND WATER BOARD (ELECTRICAL FEEDER LINE)	865-0450	(MR. CLAYTON PARRETT)
· U.S. ARMY CORPS OF ENGINEERS	862-1200	(ADMINISTRATIVE CONTRACTING OFFICE)

12. ON DIVIDED STREETS, THE SIGNS CAN BE PLACED ON THE MEDIAN IF VISIBILITY ALLOWS.

13. DETOUR ROUTES MUST BE ADVERTISED IN THE TIMES-PICAYUNE NEWSPAPER A MINIMUM OF ONE(1) WEEK PRIOR TO CLOSURE OF THE BRIDGE.

VALUE ENGINEERING INCENTIVE CLAUSES — YOUR KEY TO HIGHER PROFITS

SYMBOL	DESCRIPTION	DATE	APPROVED
	REVISIONS		

U.S. ARMY ENGINEER DISTRICT, NEW ORLEANS
CORPS OF ENGINEERS
NEW ORLEANS, LOUISIANA

BOARD OF LEVEE COMMISSIONERS
ORLEANS LEVEE DISTRICT
NEW ORLEANS, LOUISIANA

MEYER ENGINEERS, LTD. METAIRIE, LOUISIANA
LAKE PONTCHARTRAIN, LA. AND VICINITY
HIGH LEVEL PLAN
LONDON AVE. OUTFALL CANAL, PARALLEL PROTECTION FLOODPROOFING OF MIRABEAU AVE. & FILMORE AVE. BRIDGES
ORLEANS PARISH, LOUISIANA

FILMORE AVENUE SEALED BRIDGE TRAFFIC CONTROL DEVICE & PLANS & NOTES

DESIGNED BY: JCS	DATE: 3-12-01	PLOT SCALE: 1"=400'	PLOT DATE: 6-27-01
DRAWN BY: MJF			
CHECKED BY: JCS	CADD FILE: 9362848		FILE NO. H-4-44674
SUBMITTED BY: MEYER ENGINEERS, LTD. DESIGN ENGINEER	SOLICITATION NO. DACW29-01-B-0092		DWG. 48 OF 97

Safety is a Part of Your Contract

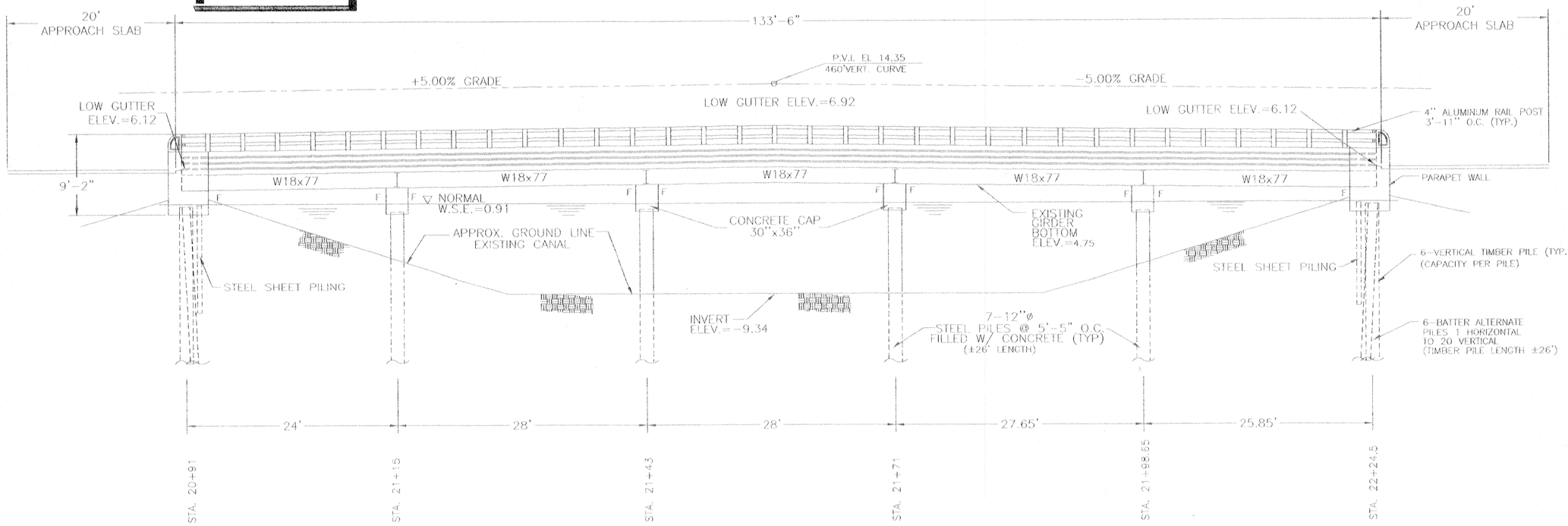

EXISTING BRIDGE ELEVATION - FILMORE AVE BRIDGE
SCALE 1"=5'

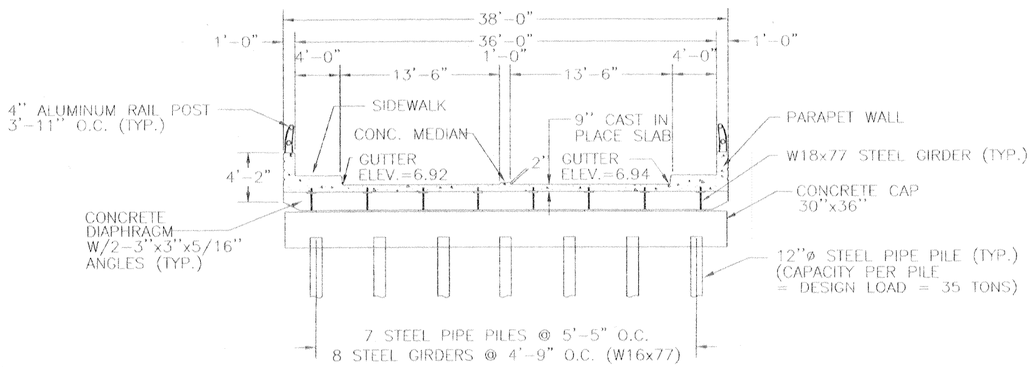

EXISTING BRIDGE SECTION - FILMORE AVE BRIDGE
SCALE 1"=5'

REFERENCE DRAWINGS
FOR GENERAL NOTES, SEE DWG. NO. 4
FOR DEMOLITION PLAN, SEE DWG. NO. 50
FOR UTILITY PLAN, SEE DWG NO. 52

SCALE 1"=5'
5' 0 5' 10' 15' 20'

SYMBOL	DESCRIPTION	DATE	APPROVED
REVISIONS			

U.S. ARMY ENGINEER DISTRICT, NEW ORLEANS
CORPS OF ENGINEERS
NEW ORLEANS, LOUISIANA

BOARD OF LEVEE COMMISSIONERS
ORLEANS LEVEE DISTRICT
NEW ORLEANS, LOUISIANA
MEYER ENGINEERS, LTD. METAIRIE, LOUISIANA

LAKE PONTCHARTRAIN, LA. AND VICINITY
HIGH LEVEL PLAN

LONDON AVE. OUTFALL CANAL, PARALLEL PROTECTION FLOODPROOFING OF MIRABEAU AVE. & FILMORE AVE. BRIDGES
ORLEANS PARISH, LOUISIANA

FILMORE AVENUE SEALED BRIDGE EXISTING BRIDGE

DESIGNED BY: JCS	DATE: 3-12-01	PLOT SCALE: 1"=10'	PLOT DATE: 6-27-01
DRAWN BY: MJF	CADD FILE: 9362b49		FILE NO. H-4-44674
CHECKED BY: JCS	SOLICITATION NO. DACW29-01-B-0092		DWG. 49 OF 97
SUBMITTED BY: MEYER ENGINEERS, LTD. DESIGN ENGINEER			

VALUE ENGINEERING INCENTIVE CLAUSES — KEY TO HIGHER PROFITS

C-A-D

Safety is a Part of Your Contract

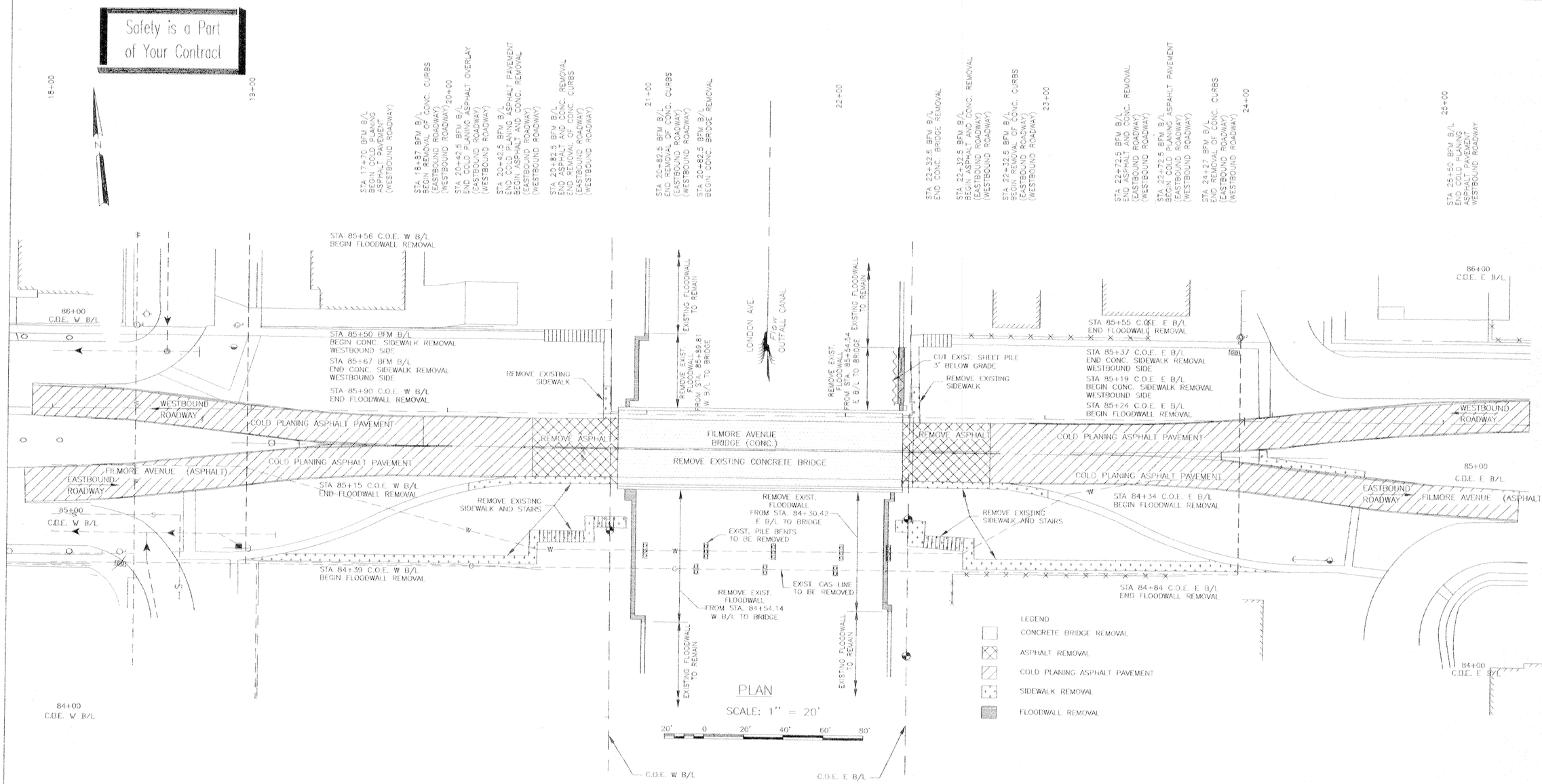

DEMOLITION REQUIREMENTS

1. SEE DWG. NO. 4 FOR SEQUENCE OF BRIDGE CONSTRUCTION.
2. SEE UTILITY RELOCATION PLAN FOR DISPOSITION OF EXISTING UTILITIES.
3. REMOVE EXISTING BRIDGE SUPERSTRUCTURE AND SUBSTRUCTURE. PULL EXISTING BRIDGE PILING.
4. SAWCUT AND REMOVE EXISTING CURBS AND SIDEWALKS WITHIN THE LIMITS SHOWN ON THIS SHEET.
5. REMOVE "I"-WALLS AT ALL CORNERS OF EXISTING BRIDGE AS SHOWN ON PLANS. SEE FLOODWALL DETAILS FOR TIE-IN INFORMATION.
6. REMOVE EXISTING ASPHALT PAVEMENTS WITHIN LIMITS SHOWN.
7. REMOVE EXISTING SHEET PILING UNDERNEATH BRIDGE ABUTMENTS.
8. BRIDGE SUPERSTRUCTURE AND SUBSTRUCTURE, BRIDGE PILING ROADWAY, CONCRETE WALL AND SHEET PILING DEMOLISHED AS A PART OF THIS PROJECT SHALL BECOME THE PROPERTY OF THE CONTRACTOR AND BE REMOVED FROM THE SITE.
9. THE SHEET PILE UNDER EXIST. FLOODWALL SHALL BE REMOVED IF IT CONFLICTS WITH NEW WORK. OTHERWISE CUT OFF THE SHEET PILE 3' BELOW GROUND ELEVATION.
10. THE TIMBER PILE BENTS FOR THE 4" GAS LINE SHALL BE REMOVED AFTER ENTERGY (GAS) HAS REMOVED THE GAS LINE.
11. THE BRONZE PLAQUE SHOULD BE REMOVED AND DELIVERED TO THE CITY PRIOR TO DEMOLITION OF THE FILMORE AVE. BRIDGE.

STA. 17+67 BFM B/L
BEGIN COLD PLANING
ASPHALT PAVEMENT
(EASTBOUND ROADWAY)

STA. 19+17 BFM B/L
BEGIN CONC. SIDEWALK REMOVAL
(ADJACENT TO PROPERTY LINE)
(EASTBOUND ROADWAY)

STA 20+11 BFM B/L
BEGIN CONC. SIDEWALK REMOVAL
(ADJACENT TO ROADWAY)
(EASTBOUND ROADWAY)

STA 20+92 BFM B/L
END CONC. SIDEWALK REMOVAL
(EASTBOUND ROADWAY)

STA 22+17 BFM B/L
BEGIN CONC. SIDEWALK REMOVAL
(EASTBOUND ROADWAY)

STA 22+26 BFM B/L
BEGIN CONC. SIDEWALK REMOVAL
(EASTBOUND ROADWAY)

STA 23+02 BFM B/L
END CONC. SIDEWALK REMOVAL
(ADJACENT TO ROADWAY)
(EASTBOUND ROADWAY)

STA 24+07 BFM B/L
BEGIN CONC. SIDEWALK REMOVAL
(EASTBOUND ROADWAY MEDIAN)

STA 24+20 BFM B/L
END CONC. SIDEWALK REMOVAL
(ADJACENT TO PROPERTY LINE)
(EASTBOUND ROADWAY)

STA 24+60 BFM B/L
END CONC. SIDEWALK REMOVAL
(EASTBOUND ROADWAY MEDIAN)

STA 25+38 BFM B/L
END COLD PLANING
ASPHALT PAVEMENT
(EASTBOUND ROADWAY)

VALUE ENGINEERING INCENTIVE CLAUSES — YOUR KEY TO HIGHER PROFITS

REFERENCE DRAWINGS
FOR GENERAL NOTES, SEE DWG. NO. 4
FOR PLAN/PROFILE, SEE DWG. NO. 47
FOR EXISTING BRIDGE, SEE DWG. NO. 49
FOR DISPOSITION OF UTILITIES, SEE DWG. NOS. 53, 54a, & 54b
FOR TYPICAL ROADWAY SECTIONS, SEE DWG. NO. 80

SYMBOL	DESCRIPTION	DATE	APPROVED
	REVISIONS		

U.S. ARMY ENGINEER DISTRICT, NEW ORLEANS
CORPS OF ENGINEERS
NEW ORLEANS, LOUISIANA

BOARD OF LEVEE COMMISSIONERS
ORLEANS LEVEE DISTRICT
NEW ORLEANS, LOUISIANA

MEYER ENGINEERS, LTD. METAIRIE, LOUISIANA
LAKE PONTCHARTRAIN, LA. AND VICINITY

HIGH LEVEL PLAN

LONDON AVE. OUTFALL CANAL, PARALLEL PROTECTION FLOODPROOFING OF MIRABEAU AVE. & FILMORE AVE. BRIDGES
ORLEANS PARISH, LOUISIANA

FILMORE AVENUE SEALED BRIDGE DEMOLITION PLAN

DESIGNED BY: JCS	DATE: 3-12-01	PLOT SCALE: 1"=20'	PLOT DATE: 6-27-01
DRAWN BY: BMS			
CHECKED BY: JCS	CADD FILE: 9362b50		FILE NO. H-4-44674
SUBMITTED BY: MEYER ENGINEERS, LTD. DESIGN ENGINEER	SOLICITATION NO. DACW29-01-B-0092		DWG: 50 OF 97

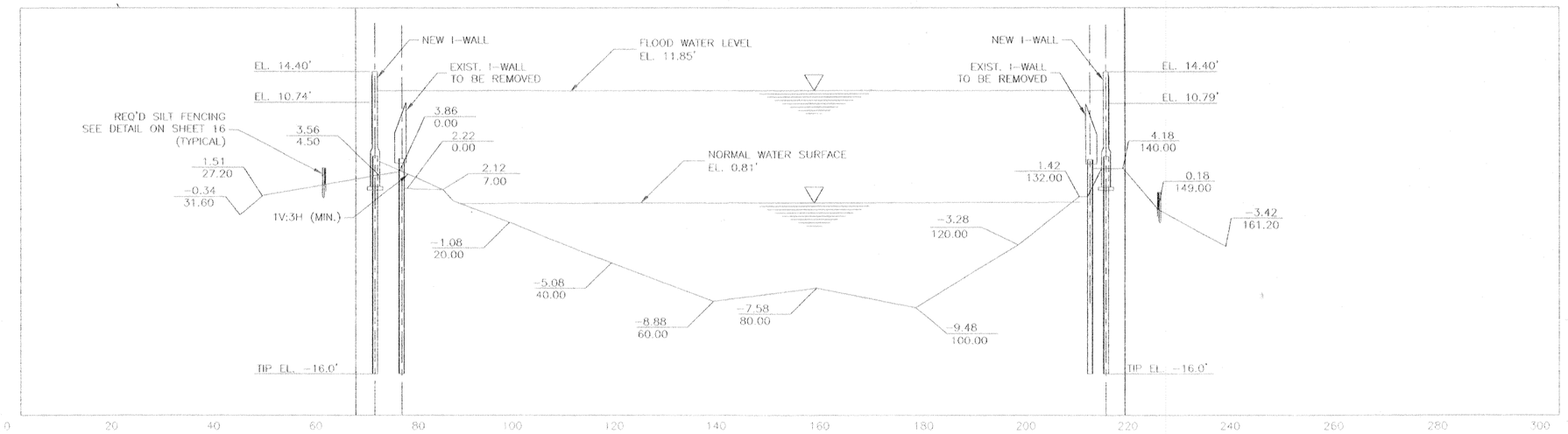

STA 84+89.21 W B/L=
STA 84+59.85 E B/L

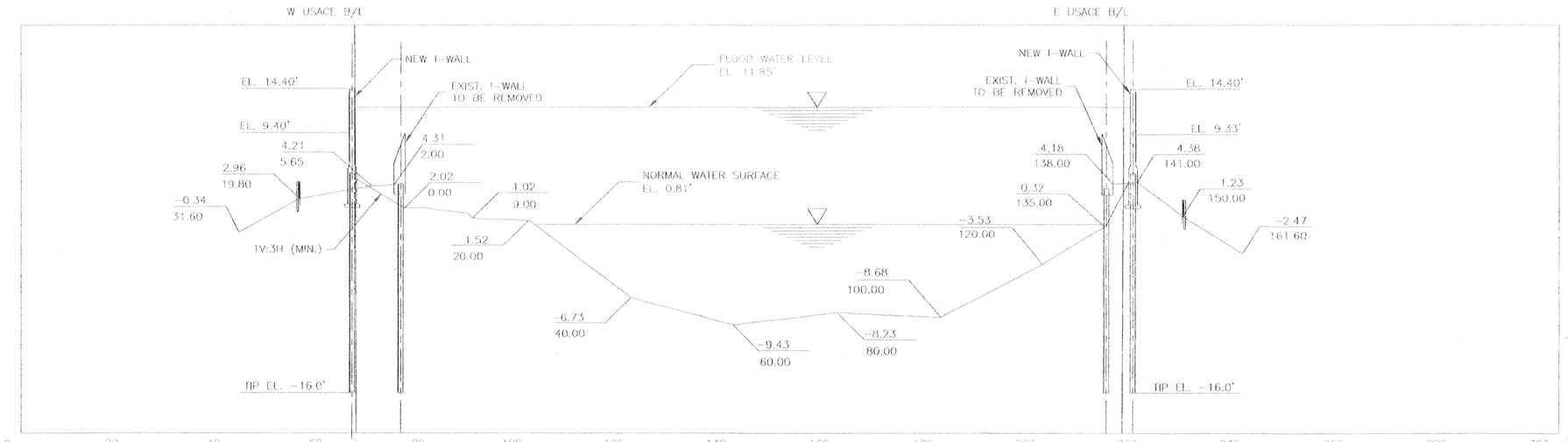

STA 85+14.21 W B/L=
STA 84+84.85 E B/L

Safety is a Part of Your Contract

REFERENCE DRAWINGS

FOR GENERAL NOTES, SEE DWG. NO. 4
FOR FLOODWALL PLAN, SEE DWG. NO. 58a
FOR BRIDGE AND CANAL SECTIONS, SEE DWG. NO. 58b

SYMBOL	DESCRIPTION	DATE	APPROVED
	REVISIONS		

U.S. ARMY ENGINEER DISTRICT, NEW ORLEANS
CORPS OF ENGINEERS
NEW ORLEANS, LOUISIANA

BOARD OF LEVEE COMMISSIONERS
ORLEANS LEVEE DISTRICT
NEW ORLEANS, LOUISIANA

MEYER ENGINEERS, LTD. METAIRIE, LOUISIANA

LAKE PONTCHARTRAIN, LA. AND VICINITY
HIGH LEVEL PLAN
LONDON AVE. OUTFALL CANAL, PARALLEL PROTECTION FLOODPROOFING OF MIRABEAU AVE. & FILMORE AVE. BRIDGES
ORLEANS PARISH, LOUISIANA

FILMORE AVENUE SEALED BRIDGE CROSS SECTIONS

DESIGNED BY: JCS	DATE: 3-12-01	PLOT SCALE: 1"=20'	PLOT DATE: 6-27-01
DRAWN BY: MJF			
CHECKED BY: JCS	CADD FILE: 53626s1a		FILE NO. H-4-44674
SUBMITTED BY: MEYER ENGINEERS, LTD. DESIGN ENGINEER	SOLICITATION NO. DACW29-01-B-0092		DWG. 51a OF 97

SCALE: VERT. 1" = 10'
10' 0 10' 20' 30' 40' 50'

SCALE: HORIZ. 1" = 20'
20' 0 20' 40' 60' 80' 100'

VALUE INCENTIVE CLAUSES IN ENGINEERING — YOUR KEY TO HIGHER PROFITS

C•A•D

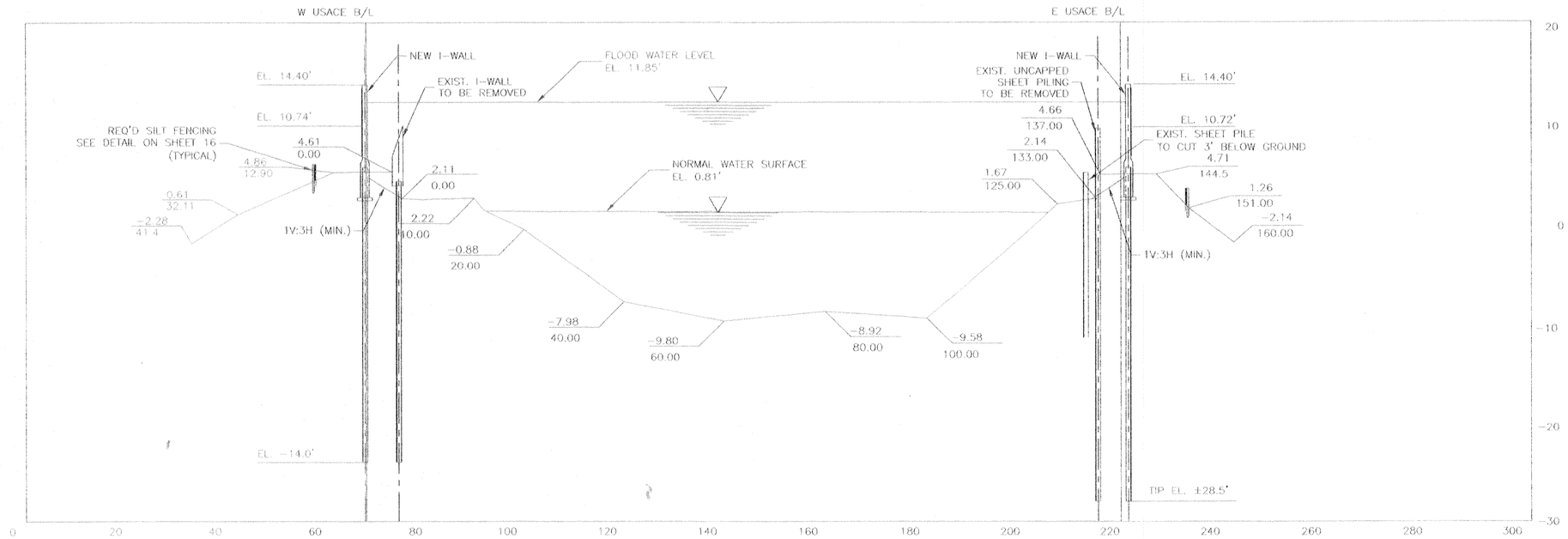

STA 85+55.69 W B/L=
STA 85+24.96 E B/L

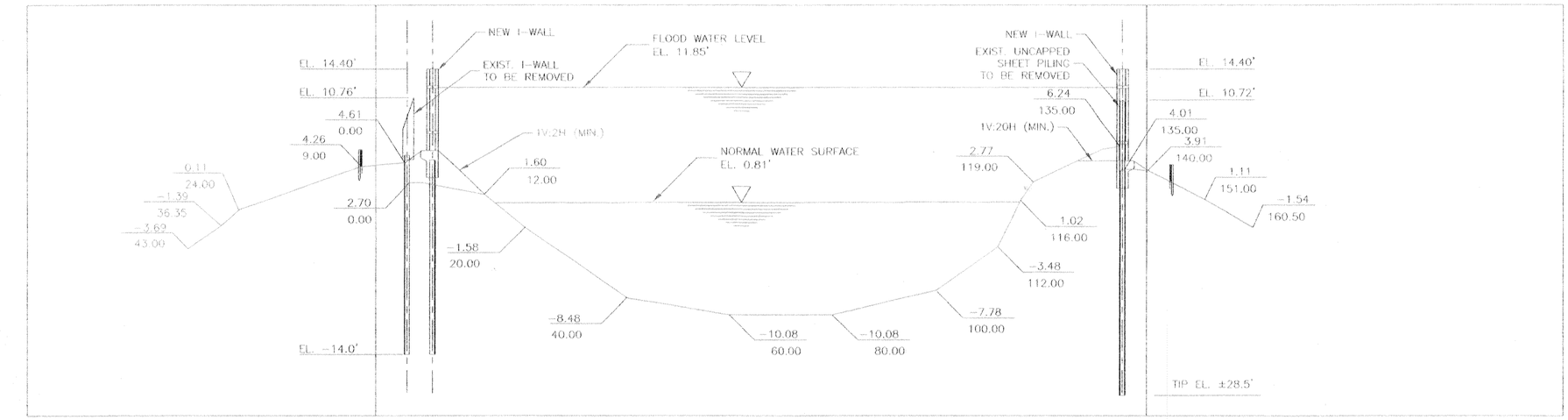

STA 85+75.69 W B/L=
STA 85+44.96 E B/L

Safety is a Part of Your Contract

REFERENCE DRAWINGS

FOR GENERAL NOTES, SEE DWG. NO. 4
FOR FLOODWALL PLAN, SEE DWG. NO. 58a
FOR BRIDGE AND CANAL SECTIONS, SEE DWG. NO. 58b

SYMBOL	DESCRIPTION	DATE	APPROVED
	REVISIONS		

U.S. ARMY ENGINEER DISTRICT, NEW ORLEANS
CORPS OF ENGINEERS
NEW ORLEANS, LOUISIANA

BOARD OF LEVEE COMMISSIONERS
ORLEANS LEVEE DISTRICT
NEW ORLEANS, LOUISIANA

MEYER ENGINEERS, LTD. METAIRIE, LOUISIANA

LAKE PONTCHARTRAIN, LA. AND VICINITY
HIGH LEVEL PLAN

LONDON AVE. OUTFALL CANAL, PARALLEL PROTECTION FLOODPROOFING OF MIRABEAU AVE. & FILMORE AVE. BRIDGES
ORLEANS PARISH, LOUISIANA

FILMORE AVENUE SEALED BRIDGE CROSS SECTIONS

DESIGNED BY: JCS	DATE: 3-12-01	PLOT SCALE: 1"=20'	PLOT DATE: 6-27-01
DRAWN BY: MJF			
CHECKED BY: JCS	CADD FILE: 9362b51b		FILE NO. H-4-44674
SUBMITTED BY: MEYER ENGINEERS, LTD. DESIGN ENGINEER	SOLICITATION NO. DACW29-01-B-0092		DWG. 51b OF 97

SCALE: VERT. 1" = 10'
10' 0 10' 20' 30' 40' 50'

SCALE: HORIZ. 1" = 20'
20' 0 20' 40' 60' 80' 100'

C-A-D

VALUE ENGINEERING INCENTIVE CLAUSES YOUR KEY TO HIGHER PROFITS

Safety is a Part of Your Contract

19+00 20+00 21+00 22+00 23+00 24+00

LONDON AVE. OUTFALL CANAL

FILMORE AVENUE BRIDGE

BFM B/L "B"

EXISTING CABLE SPLICE

C.O.E. E B/L

C.O.E. W B/L

ELEC 4" G 50" W 18" D 8" G 3" G 6" W 15" D

GM-1 E-1 PP-1 LT-1 G-1 E-2 D-1 CB-1 W-1 A-1 PP-2 G-2 E-3 G-3 E-4 PP-3 LT-2 E-5 W-1 E-6 E-7 E-8 E-9 E-10 E-11 E-12 E-13 E-14 LT-3 LT-4 PP-4 PP-5 PP-6 PP-7 G-4 G-5 D-2 S-1 SM-1 D-3 DM-1 SG-1 D-4 D-5 D-6 CB-2 A-2 WM-1 FH-1 W-2 GM-2 GM-3

PLAN

SCALE: 1" = 15'

15' 0 15' 30' 45' 60'

NOTE:
EXISTING UTILITY LOCATIONS BASED ON FIELD SURVEY AND INFORMATION FROM UTILITY AGENCIES. CONTRACTOR SHALL ARRANGE FOR OWNER TO MARK UTILITY LOCATIONS IN FIELD PRIOR TO CONSTRUCTION.

LEGEND

G-3 EXISTING UTILITIES

G-3 RELOCATED UTILITIES

REFERENCE DRAWINGS
FOR GENERAL NOTES, SEE DWG. NO. 4
FOR PLAN/PROFILE, SEE DWG. NO. 47
FOR REQUIRED UTILITY RELOCATION/MODIFICATION CHART AND DESCRIPTION OF UTILITIES, SEE DWG. NO. 53
FOR DETAILS OF UTILITY RELOCATIONS TO NEW BRIDGE, SEE DWG. NO. 54a AND 54b

TOP OF I-WALL, EL. 14.40
SIDEWALK
12" APPROACH SLAB
DESIGN WATER ELEV = 11.85
TOP OF PARAPET WALL ELEV = 13.90
TOP OF I-WALL, EL. 14.40
NORMAL W.S.E.=1.14

STRUCTURE ELEVATION

SCALE: 1" = 15'

15' 0 15' 30' 45' 60'

VALUE ENGINEERING INCENTIVE CLAUSES YOUR KEY TO HIGHER PROFITS

C•A•D

SYMBOL	DESCRIPTION	DATE	APPROVED
	REVISIONS		

U.S. ARMY ENGINEER DISTRICT, NEW ORLEANS
CORPS OF ENGINEERS
NEW ORLEANS, LOUISIANA

BOARD OF LEVEE COMMISSIONERS
ORLEANS LEVEE DISTRICT
NEW ORLEANS, LOUISIANA

MEYER ENGINEERS, LTD. METAIRIE, LOUISIANA
LAKE PONTCHARTRAIN, LA AND VICINITY
HIGH LEVEL PLAN

LONDON AVE. OUTFALL CANAL, PARALLEL PROTECTION FLOODPROOFING OF FILMORE AVE. & MIRABEAU AVE. BRIDGES
ORLEANS PARISH, LOUISIANA

FILMORE AVENUE SEALED BRIDGE UTILITY PLAN

DESIGNED BY: JCS	DATE: 3-12-01	PLOT SCALE: 1"=15'	PLOT DATE: 6-27-01
DRAWN BY: MJF			
CHECKED BY: JCS	CADD FILE: 936252		FILE NO H-4-44674
SUBMITTED BY: MEYER ENGINEERS, LTD. DESIGN ENGINEER	SOLICITATION NO. DACW29-01-B-0092		DWG. 52 OF 97

REQUIRED UTILITY RELOCATION/MODIFICATION

ITEM NO.	DESCRIPTION	LOCATION/B/L STATION	OWNER	DISPOSITION
A-1 A-2	GUY ANCHORS TO POWER POLES	STA. 18+99.00 BFM B/L, 69.00 RT. STA. 24+24.00 BFM B/L, 68.00 RT.	ENTERGY ELEC. OPERATINS	TO REMAIN, DO NOT DISTURB.
CB-1 CB-2	CATCH BASINS	STA. 18+95.50 BFM B/L, 68.00 RT. STA. 24+49.00 BFM B/L, 67.00 RT.	NEW ORLEANS DPW	TO REMAIN, DO NOT DISTURB.
D-1	18" DRAIN LINE	ALONG FILMORE AVENUE E.B. SIDEWALK SIDE AND CROSSING PRATT DRIVE	NEW ORLEANS DPW	TO REMAIN, DO NOT DISTURB.
D-2	12" DRAIN LINE	ALONG FILMORE AVENUE W.B. SIDEWALK SIDE AND CROSSING WARRINGTON DRIVE	NEW ORLEANS DPW	TO REMAIN, DO NOT DISTURB.
D-3	15" DRAIN LINE	ALONG FILMORE AVENUE W.B. SIDEWALK SIDE AND CROSSING WARRINGTON DRIVE	NEW ORLEANS DPW	TO REMAIN, DO NOT DISTURB.
D-4	6" DRAIN LINE	ALONG FILMORE AVENUE E.B. SIDEWALK SIDE AT STA. 24+22.00 BFM B/L TO DM-1	NEW ORLEANS DPW	TO REMAIN, DO NOT DISTURB.
D-5	10" DRAIN LINE	ALONG FILMORE AVENUE E.B. SIDEWALK SIDE 65.00 LT. OF BFM B/L TO DM-1	NEW ORLEANS DPW	TO REMAIN, DO NOT DISTURB.
D-6	15" DRAIN LINE	ALONG FILMORE AVENUE E.B. SIDEWALK SIDE 65.00 LT. OF BFM B/L TO DM-1	NEW ORLEANS DPW	TO REMAIN, DO NOT DISTURB.
DM-1	DRAIN MANHOLE	STA 24+22.00 BFM B/L, 31.00 LT	NEW ORLEANS DPW	TO REMAIN, DO NOT DISTURB.
E-1	OVERHEAD ELECTRICAL LINES	CROSSING FILMORE AVENUE AT STA. 19+04.00 BFM B/L	ENTERGY (STREET LIGHT)	TO REMAIN, DO NOT DISTURB.
E-2	OVERHEAD ELECTRICAL LINES	CROSSING FILMORE AVENUE AT STA. 19+04.00 BFM B/L	ENTERGY (STREET LIGHT)	TO REMAIN, DO NOT DISTURB.
E-3	OVERHEAD ELECTRICAL LINES	ALONG FILMORE AVENUE E.B. SIDEWALK SIDE - WEST OF BRIDGE	ENTERGY (ELECTRICAL)	TO REMAIN, DO NOT DISTURB.
E-4	OVERHEAD ELECTRICAL LINES	AT WEST SIDE OF FILMORE AVENUE BRIDGE, FROM POWER POLE TO STREET LIGHT	ENTERGY (STREET LIGHT)	TO BE REMOVED DURING CONSTRUCTION BY ENTERGY(STREET LIGHT). TO BE REINSTALLED AT ORIGINAL LOCATION BY ENTERGY (STREET LIGHT) UPON BRIDGE WORK COMPLETION. CONTRACTOR SHALL COORDINATE THIS WORK WITH ENTERGY (STREET LIGHT).
E-5	OVERHEAD ELECTRICAL LINES	CROSSING LONDON AVENUE CANAL SOUTH OF EXISTING BRIDGE	ENTERGY (ELECTRICAL)	DEENERGIZED DURING CONSTRUCTION AND REENERGIZED UPON BRIDGE WORK COMPLETION - BY ENTERGY
E-6	OVERHEAD ELECTRICAL LINES	CROSSING FILMORE AVENUE AT STA. 22+56.00 BFM B/L	ENTERGY (STREET LIGHT)	TO BE REMOVED DURING CONSTRUCTION BY ENTERGY(STREET LIGHT). TO BE REINSTALLED AT ORIGINAL LOCATION BY ENTERGY (STREET LIGHT) UPON BRIDGE WORK COMPLETION. CONTRACTOR SHALL COORDINATE THIS WORK WITH ENTERGY (STREET LIGHT).
E-7	OVERHEAD ELECTRICAL LINES	ALONG FILMORE AVENUE E.B. SIDEWALK SIDE - WEST OF BRIDGE	ENTERGY (ELECTRICAL)	TO REMAIN, DO NOT DISTURB.
E-8	OVERHEAD ELECTRICAL LINES	CROSSING FILMORE AVENUE AT STA. 24+00.00 BFM B/L	ENTERGY (STREET LIGHT)	TO REMAIN, DO NOT DISTURB.
E-9	OVERHEAD ELECTRICAL LINES	CROSSING FILMORE AVENUE AT STA. 24+00.00 BFM B/L	ENTERGY (STREET LIGHT)	TO REMAIN, DO NOT DISTURB.
E-10	OVERHEAD ELECTRICAL LINES	ALONG FILMORE AVENUE E.B. SIDEWALK SIDE - EAST OF BRIDGE	ENTERGY (ELECTRICAL)	TO REMAIN, DO NOT DISTURB.
E-11	S&WB PRIMARY ELECTRIC FEEDER CABLE - 340	ALONG LONDON AVENUE CANAL - EAST SIDE OF CANAL ALONG FLOODWALLS	S&WB	CONTRACTOR SHALL MOVE THE ELECT. FEEDER CABLE WITH PRECAUTION DURING CONSTRUCTION. COORDINATE WITH S&WB FOR DEENERGIZING/REENERGIZING OF THE CABLES. CONTRACTOR SHALL ATTACH EXISTING FEEDER TO NEW "I" WALL UPON COMPLETION.
E-12	S&WB PRIMARY ELECTRIC FEEDER CABLE - 400	ALONG LONDON AVENUE CANAL - WEST SIDE OF CANAL ALONG FLOODWALLS	S&WB	CONTRACTOR SHALL TEMPORARILY RELOCATE A NEW FEEDER CABLE. COORDINATE WITH S&WB FOR DEENERGIZING/REENERGIZING OF THE CABLES. CONTRACTOR SHALL ATTACH A NEW PERMANENT FEEDER TO NEW "I" WALL UPON COMPLETION.
E-13	S&WB PRIMARY ELECTRIC FEEDER CABLE - 432	ALONG LONDON AVENUE CANAL - EAST SIDE OF CANAL ALONG LEVEE TOE.	S&WB	TO REMAIN, DO NOT DISTURB. CONTRACTOR SHALL COORDINATE WITH S&WB FOR DEENERGIZING/REENERGIZING OF THE CABLE.
E-14	S&WB UTILITY BOX	STA. 22+51.3 BFM B/L, 57.20 RT.	S&WB	TO REMAIN, DO NOT DISTURB.
FH-1	FIRE HYDRANT	STA. 24+02.00 BFM B/L, 59.00 LT.	S&WB	TO REMAIN, DO NOT DISTURB.
G-1	2" U.P. GAS LINE	CROSSING FILMORE AVENUE AT STA. 18+98.00 BFM B/L	ENTERGY GAS OPERATIONS	TO REMAIN, DO NOT DISTURB.
G-2	2" U.P. GAS LINE	ALONG PRATT DR. AT STA. 19+04.00 BFM B/L	ENTERGY GAS OPERATIONS	TO REMAIN, DO NOT DISTURB.
G-3	4" U.P. GAS LINE	ALONG FILMORE AVENUE E.B. SIDEWALK SIDE AT 75.00 RT. OF BFM B/L CROSSING LONDON AVENUE CANAL	ENTERGY GAS OPERATIONS	TO BE RELOCATED BY ENTERGY GAS OPERATIONS
G-4	3" U.P. GAS LINE	CROSSING FILMORE AVENUE AT STA. 23+97.50 BFM B/L	ENTERGY GAS OPERATIONS	TO REMAIN, DO NOT DISTURB.
G-5	3" U.P. GAS LINE	ALONG FILMORE AVENUE W.B. SIDEWALK SIDE AT 36.00 LT. OF BFM B/L EAST OF BRIDGE	ENTERGY GAS OPERATIONS	TO REMAIN, DO NOT DISTURB.
G-6	3" U.P. GAS LINE	ALONG WARRINGTON DRIVE W.B. SIDEWALK SIDE AT STA. 24+02.00 BFM B/L	ENTERGY GAS OPERATIONS	TO REMAIN, DO NOT DISTURB.

ITEM NO.	DESCRIPTION	LOCATION/B/L STATION	OWNER	DISPOSITION
GM-1 GM-2 GM-3	GAS MANHOLE	STA. 19+93.00 BFM B/L, 42.00 LT. STA. 23+97.50 BFM B/L, 42.00 LT. STA. 23+97.50 BFM B/L, 42.00 LT.	ENTERGY GAS OPERATIONS	TO REMAIN, DO NOT DISTURB.
LT-1	LIGHT POLE	STA. 19+10.00 BFM B/L 17.00 RT.	ENTERGY ELEC.(STREET LIGHT)	TO REMAIN, DO NOT DISTURB.
LT-2	LIGHT POLE	STA. 20+43.00 BFM B/L 37.00 RT.	ENTERGY ELEC.(STREET LIGHT)	TO BE REMOVED DURING CONSTRUCTION AND INSTALLED AT STA. 20+75 UPON COMPLETION OF CONSTRUCTION. (BY ENTERGY (STREET LIGHT) & NEW ORLEANS DEPT. OF UTILITIES). TEMPORARY FLOOD LIGHTS SHALL BE INSTALLED DURING CONSTRUCTION BY ENTERGY (STREET LIGHT) CONTRACTOR SHALL COORDINATE THIS WORK WITH ENTERGY (STREET LIGHT).
LT-3	LIGHT POLE	STA. 22+45.00 BFM B/L 01.00 RT.	ENTERGY ELEC.(STREET LIGHT)	TO BE REMOVED DURING CONSTRUCTION AND INSTALLED AT STA. 20+75 UPON COMPLETION OF CONSTRUCTION. (BY ENTERGY (STREET LIGHT) & NEW ORLEANS DEPT. OF UTILITIES). TEMPORARY FLOOD LIGHTS SHALL BE INSTALLED DURING CONSTRUCTION BY ENTERGY (STREET LIGHT) CONTRACTOR SHALL COORDINATE THIS WORK WITH ENTERGY (STREET LIGHT).
LT-4	LIGHT POLE	STA. 24+05.00 BFM B/L 17.00 RT.	ENTERGY ELEC. OPERATIONS	TO REMAIN, DO NOT DISTURB.
PP-1 PP-2 PP-3 PP-4 PP-5 PP-6 PP-7	POWER POLE	STA. 19+80.00 BFM B/L 21.00 LT. STA. 18+82.00 BFM B/L 69.00 RT. STA. 20+50.00 BFM B/L 71.00 RT. STA. 22+45.00 BFM B/L 78.00 RT. STA. 23+68.00 BFM B/L 53.00 RT. STA. 24+44.00 BFM B/L 68.00 RT. STA. 24+05.00 BFM B/L 31.00 LT.	ENTERGY ELEC. OPERATIONS	LOCATE ALL POWER POLES PER NOS. ON DRAWING PROVIDED. ALL POWER POLES TO REMAIN.
S-1	SEWER LINE	ALONG FILMORE AVENUE W.B. SIDEWALK SIDE AT STA 24+20.00 BFM B/L	S&WB	TO REMAIN, DO NOT DISTURB.
SG-1	STREET SIGN	STA. 24+54.00 BFM B/L 15.00 RT.	NEW ORLEANS DPW	REMOVE AND STORE DURING CONSTRUCTION, REINSTALL DURING FINAL SIGNING AND STRIPING
SM-1	SEWER MANHOLE	STA. 24+20.00 BFM B/L 52.00 LT.	S&WB	TO REMAIN, DO NOT DISTURB.
W-1	50" WATER LINE	CROSSING LONDON CANAL SOUTH OF EXISTING BRIDGE ATTACHED TO PILE SUPPORTS ALONG MIRABEAU AVENUE E.B. SIDEWALK SIDE	S&WB	EXIST. PILE BENTS (SUPPORTS) WILL BE REPLACED. 50" WATERLINE TO REMAIN, DO NOT DISTURB.
W-2	6" WATER LINE	ALONG FILMORE AVENUE W.B. SIDEWALK SIDE AND CROSSING WARRINGTON DRIVE	S&WB	TO REMAIN, DO NOT DISTURB.
WM-1	WATER MANHOLE	STA. 24+43.00 BFM B/L 78.00 LT.	S&WB	TO REMAIN, DO NOT DISTURB.

Safety is a Part of Your Contract

AGENCY CONTACT POINTS

· NEW ORLEANS DEPT. OF PUBLIC WORKS, TRAFFIC ENGINEERING DIVISION	565-6840	(MR. ELMER DARWIN)
· NEW ORLEANS DEPT. OF UTILITIES	243-5521	(MR. DRAYFUS GUIENT)
· LOUISIANA DEPARTMENT OF TRANSPORTATION & DEVELOPMENT	437-3100	(MR. CHRIS MORVANT)
· ENTERGY (GAS)	595-3846	(MR. HENRY W. SPANSEL)
· ENTERGY (ELECTRICAL)	595-3460	(MR. NORMAN SILES)
· ENTERGY (STREET LIGHT)	595-3825	(MR. LARRY STYRUM)
· COX CABLE	734-7345	(MS. MITZI MANCUSO)
· SEWERAGE AND WATER BOARD (UTILITIES)	865-0651	(MR. LARRY MICKAL)
· SEWERAGE AND WATER BOARD (ELECTRICAL FEEDER LINE)	865-0450	(MR. CLAYTON PARRETT)
· U.S. ARMY CORPS OF ENGINEERS	862-1200	(ADMINISTRATIVE CONTRACTING OFFICE)

REFERENCE DRAWINGS
FOR GENERAL NOTES, SEE DWG. NO. 4
FOR UTILITY PLAN, SEE DWG. NO. 52.

SYMBOL	DESCRIPTION	DATE	APPROVED
	REVISIONS		

U.S. ARMY ENGINEER DISTRICT, NEW ORLEANS
CORPS OF ENGINEERS
NEW ORLEANS, LOUISIANA

BOARD OF LEVEE COMMISSIONERS
ORLEANS LEVEE DISTRICT
NEW ORLEANS, LOUISIANA

MEYER ENGINEERS, LTD. METAIRIE, LOUISIANA

LAKE PONTCHARTRAIN, LA. AND VICINITY
HIGH LEVEL PLAN

LONDON AVE. OUTFALL CANAL, PARALLEL PROTECTION FLOODPROOFING OF FILMORE AVE. & MIRABEAU AVE. BRIDGE
ORLEANS PARISH, LOUISIANA

FILMORE AVENUE SEALED BRIDGE UTILITY RELOCATIONS

DESIGNED BY: JCS	DATE: 3-12-01	PLOT SCALE: 1"=2'	PLOT DATE: 6-27-01
DRAWN BY: MJF			
CHECKED BY: JCS	CADD FILE: 9362655		FILE NO. H-4-44674
SUBMITTED BY: MEYER ENGINEERS, LTD. DESIGN ENGINEER	SOLICITATION NO. DACW29-01-8-0092		DWG. 53 OF 97

C·A·D

VALUE ENGINEERS INCENTIVE CLAUSES — YOUR KEY TO HIGHER PROFITS

Safety is a Part of Your Contract

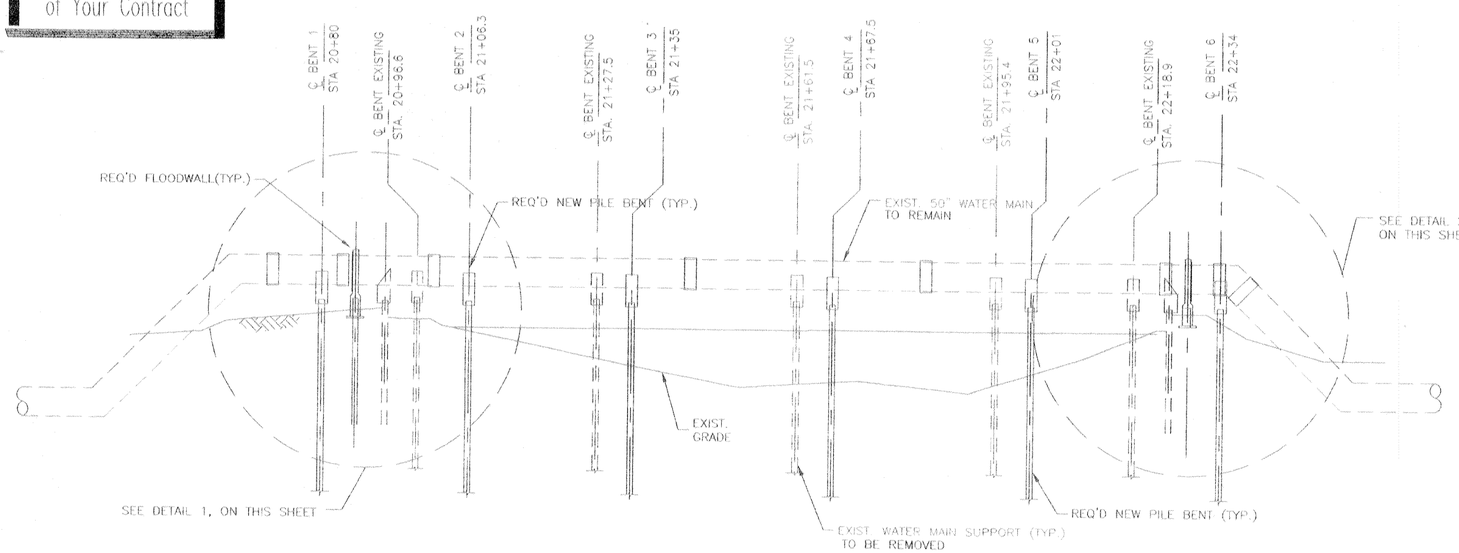

50" WATER MAIN CROSSING ELEVATION

SCALE: 1" = 10'
(LOOKING NORTH)

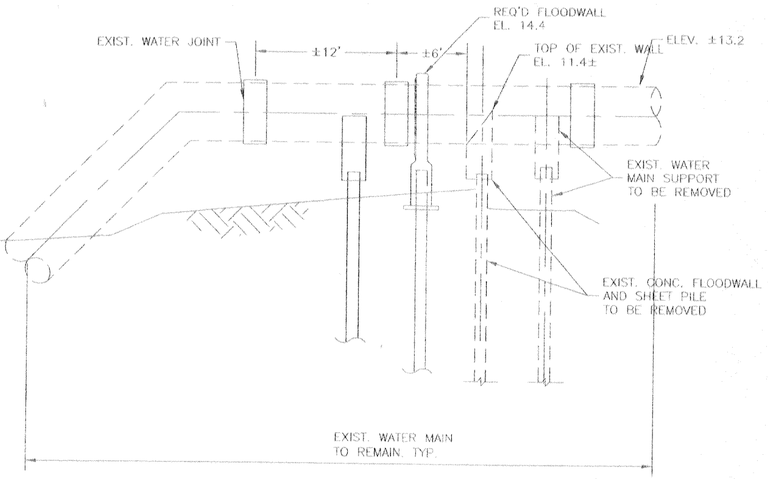

DETAIL 1 (52/54)

SCALE: 1" = 20'

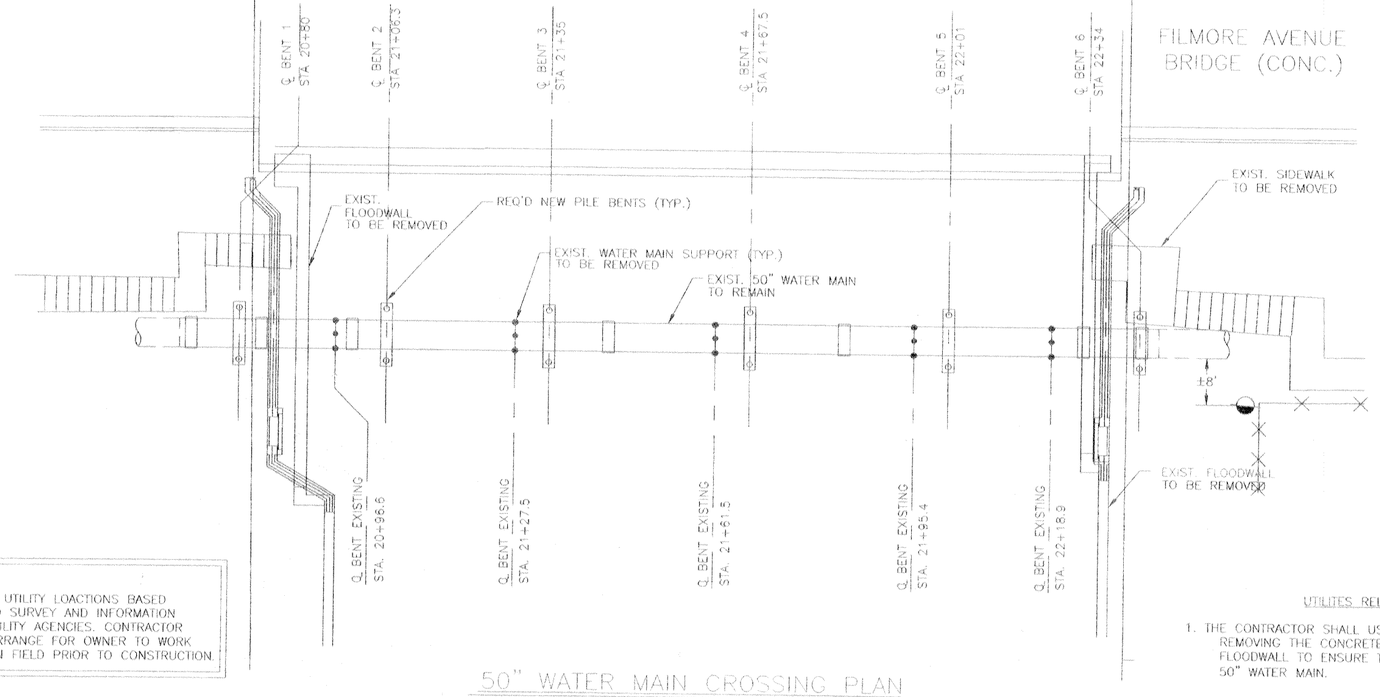

50" WATER MAIN CROSSING PLAN

SCALE: 1" = 10'

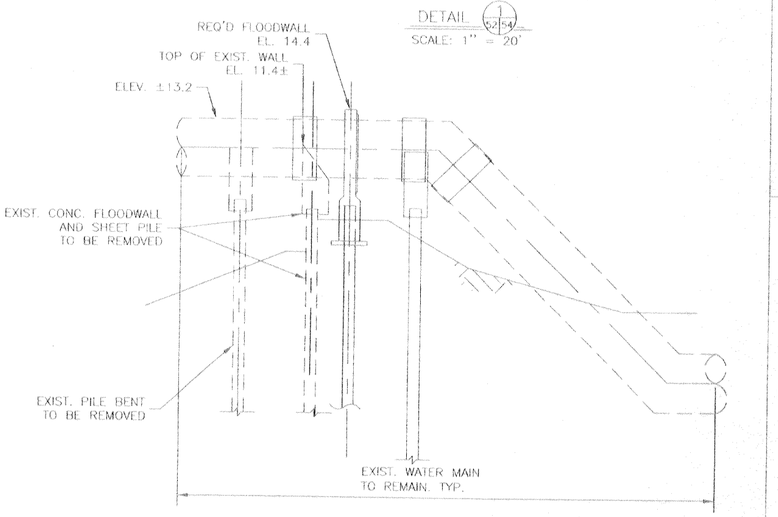

DETAIL 2 (52/54)

SCALE: 1" = 20'

NOTE:

EXISTING UTILITY LOACTIONS BASED ON FIELD SURVEY AND INFORMATION FROM UTILITY AGENCIES. CONTRACTOR SHALL ARRANGE FOR OWNER TO WORK UTILITY IN FIELD PRIOR TO CONSTRUCTION.

UTILITES RELOCATION NOTES:

1. THE CONTRACTOR SHALL USE EXTREME CAUTION WHEN REMOVING THE CONCRETE CAP OF THE EXISTING FLOODWALL TO ENSURE THE QUALITY OF THE EXISTING 50" WATER MAIN.

REFERENCE DRAWINGS:

FOR GENERAL NOTES, SEE DWG. NO. 4
FOR PLAN/PROFILE, SEE DWG. NO. 47
FOR UTILITY RELOCATION SEE DWGS. NOS. 52 & 53

C-A-D

20' 10' 0 10' 20' 30' 40' 50'

SCALE: 1" = 10'

VALUE ENGINEERING O INCENTIVE CLAUSES — YOUR KEY TO HIGHER PROFITS

SYMBOL	DESCRIPTION	DATE	APPROVED
	REVISIONS		

U.S. ARMY ENGINEER DISTRICT, NEW ORLEANS
CORPS OF ENGINEERS
NEW ORLEANS, LOUISIANA

BOARD OF LEVEE COMMISSIONERS
ORLEANS LEVEE DISTRICT
NEW ORLEANS, LOUISIANA

MEYER ENGINEERS, LTD. METAIRIE, LOUISIANA

LAKE PONTCHARTRAIN, LA. AND VICINITY
HIGH LEVEL PLAN

LONDON AVE. OUTFALL CANAL, PARALLEL PROTECTION FLOODPROOFING OF MIRABEAU AVE. & FILMORE AVE. BRIDGES
ORLEANS PARISH, LOUISIANA

FILMORE AVENUE SEALED BRIDGE UTILITY RELOCATIONS

DESIGNED BY: JCS	DATE: 3-12-01	PLOT SCALE: 1"=10'	PLOT DATE: 6-27-01
DRAWN BY: MJF			
CHECKED BY: JCS	CADD FILE: 936254a		FILE NO. H-4-44674
SUBMITTED BY: MEYER ENGINEERS, LTD. DESIGN ENGINEER	SOLICITATION NO. DACW29-01-B-0092		DWG 54a OF 97

Safety is a Part of Your Contract

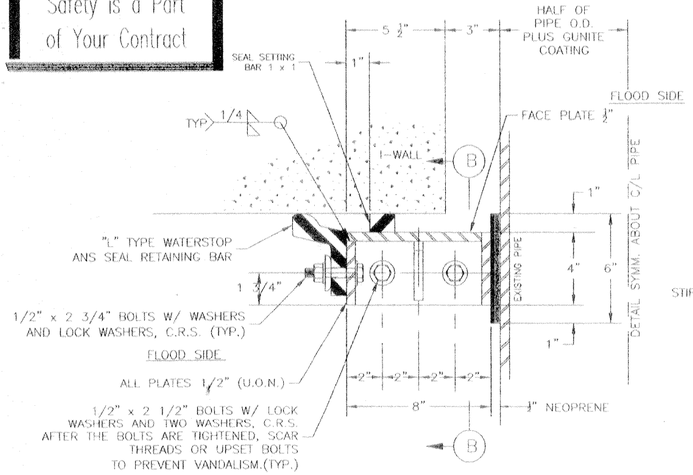

NOTE:
SET SEAL FOR A MINIMUM OF A 1/4" INITIAL DEFLECTION.

SECTION (A)
SCALE: N.T.S.

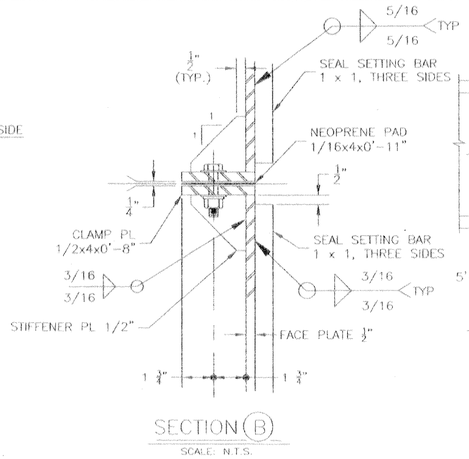

SECTION (B)
SCALE: N.T.S.

NOTE:
WELDS SHOWN ARE TYPICAL FOR SIMILAR JOINTS AND ALL WELDS ON WALL SIDE OF FACE PLATE SHALL BE FLUSH WITH BASE METAL.

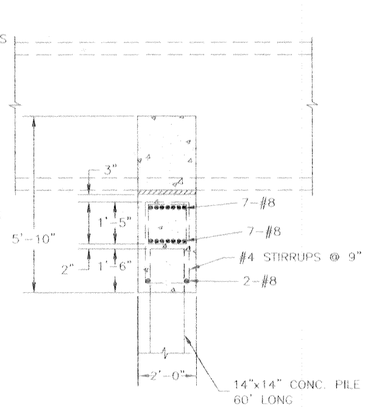

TYPICAL PILE CAP FOR 50" WATER MAIN

SECTION (C)
SCALE: 1"=10'

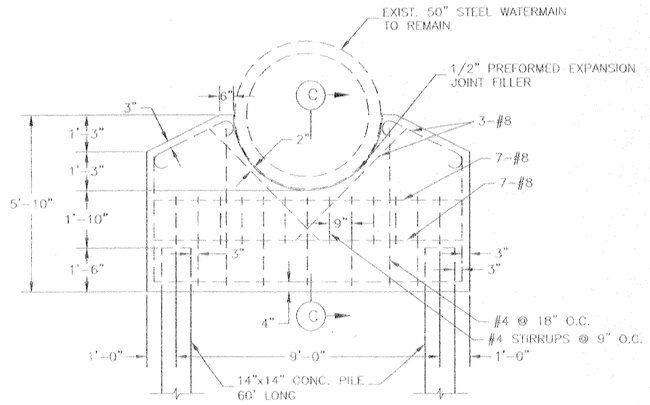

TYPICAL PILE CAP FOR 50" WATER MAIN
SCALE: 1"=10'

NOTE:
1. REMOVE EXIST. PILE BENTS. CUT PILES AT 2' BELOW MUDLINE.
2. CONC. TO BE 4,000 psi AND REBAR TO BE 60,000 psi.
3. PILES TO BE 14" SQUARE PRESTRESSED CONC. x 60' LONG. MINIMUM 20 TON DESIGN LOAD. MINIMUM 5,000 psi @ 28 DAYS. MINIMUM PRESTRESS FORCE AFTER TENSION = 780 psi.

ASSEMBLY SEQUENCE
AFTER THE TWO FRAMES ARE LOOSELY CLAMPED ON THE PIPE, THE TOTAL ASSEMBLY SHALL BE PUSHED AGAINST THE WALL, SETTING THE SEALS, THEN TIGHTEN CLAMP PLATES TO CLOSE THE 1/4" GAP.

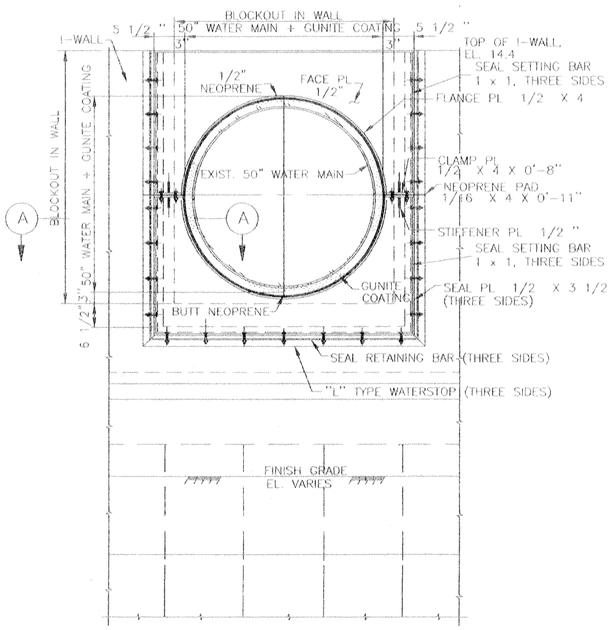

FLOOD SIDE ELEVATION

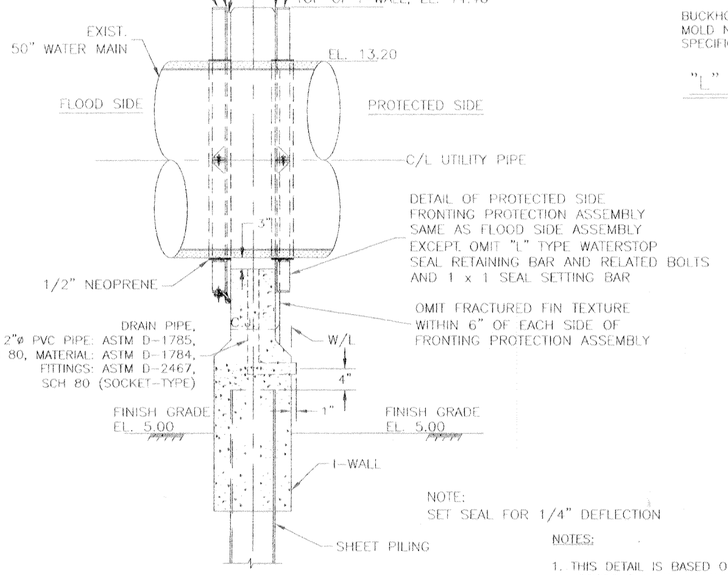

NOTE:
SET SEAL FOR 1/4" DEFLECTION

SECTION THRU FLOODWALL

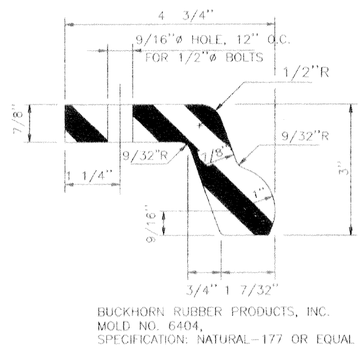

BUCKHORN RUBBER PRODUCTS, INC.
MOLD NO. 6404,
SPECIFICATION: NATURAL-177 OR EQUAL

"L" TYPE WATERSTOP
SCALE: N.T.S.

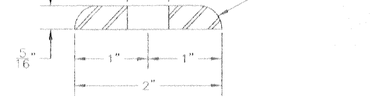

SEAL RETAINING BAR
SCALE: N.T.S.

NOTES:
1. THIS DETAIL IS BASED ON THE NEW WALL FACE BEING PERPENDICULAR TO THE PIPE.
2. ALL MATERIAL FOR FRONTING PROTECTION SHALL BE ALUMINUM, UNLESS NOTED OTHERWISE.
3. ALL STRUCTURAL ALUMINUM PLATES AND BARS SHALL BE ASTM B 209, TYPE 6061-T6.
4. ALL COROSION RESISTANT STEEL (C.R.S.) SHALL BE TYPE 316.

20' 10' 0 10' 20' 30' 40' 50'
SCALE: 1" = 10'

C-A-D

REFERENCE DRAWINGS:
FOR GENERAL NOTES, SEE DWG. NO. 4
FOR PLAN/PROFILE, SEE DWG. NO. 47
FOR UTILITY RELOCATION SEE DWGS. NOS. 52 & 53

SYMBOL	DESCRIPTION	DATE	APPROVED

REVISIONS

U.S. ARMY ENGINEER DISTRICT, NEW ORLEANS
CORPS OF ENGINEERS
NEW ORLEANS, LOUISIANA

BOARD OF LEVEE COMMISSIONERS
ORLEANS LEVEE DISTRICT
NEW ORLEANS, LOUISIANA

MEYER ENGINEERS, LTD. METAIRIE, LOUISIANA

LAKE PONTCHARTRAIN, LA. AND VICINITY
HIGH LEVEL PLAN

LONDON AVE. OUTFALL CANAL, PARALLEL PROTECTION FLOODPROOFING OF MIRABEAU AVE. & FILMORE AVE. BRIDGES
ORLEANS PARISH, LOUISIANA

FILMORE AVENUE SEALED BRIDGE UTILITY RELOCATIONS

DESIGNED BY: JCS	DATE: 3-12-01	PLOT SCALE: 1"=10'	PLOT DATE: 6-27-01
DRAWN BY: MJF			
CHECKED BY: JCS	CADD FILE: 9362b54b		FILE NO. H-4-44674
SUBMITTED BY: MEYER ENGINEERS, LTD. DESIGN ENGINEER	SOLICITATION NO. DACW29-01-B-0092		DWG. 54b OF 97

VALUE INCENTIVE CLAUSES IN ENGINEERING — YOUR KEY TO HIGHER PROFITS

FRONTING PROTECTION UTILITY DETAIL

SCALE: N.T.S.

Safety is a Part of Your Contract

N

PROPERTY LINE

C.O.E. W B/L
356°48'19.0"

21+00

EXIST. ELECTRIC FEEDER CABLE TO REMAIN

NEW LEAD SPLICE STA. 86+14 (TEMPORARY AND PERMANENT)

LIMIT OF EXIST. ELEC. FEEDER CABLE TO BE RELOCATED STA. 86+14 W B/L

86+00

PROPERTY LINE

BFM B/L "A"

PROTECTED SIDE

FEEDER CABLE (ATTACH TO NEW FLOODWALL), SEE FLOODWALL DETAIL 3 ON DWG. 56

FLOOD SIDE

W/L

EQUATION:
STA. 85+52.64 C.O.E. W B/L
STA. 20+81.68 BFM B/L "B"

TEMPORARY ELEC. FEEDER (FL-400) C.L.X. CABLE SEE NOTE 2

BFM B/L "B"

EXISTING ELECTRICAL FEEDER CABLE (FL-400) TO BE RELOCATED SEE NOTE 1

C/L OF BRIDGE AND PROJECT

FILMORE BRIDGE

LOCATION OF RELOCATED PERMANENT ELECTRICAL FEEDER CABLE (FL-400) SEE NOTE 3

P.I. STA. 84+94.52(LCW-9)
C.O.E. WEST BASELINE

85+00

50" WATER

EXISTING SPLICE

W/L

PROPERTY LINE

RELOCATED PERMANENT ELECTRICAL FEEDER CABLE (FL-400) (ATTACHED TO NEW FLOODWALL) SEE DETAIL 3 ON DWG. 56

4" GAS

RELOCATED EXISTING ELECTRICAL FEEDER CABLE (FL-340) (ATTACHED TO NEW FLOODWALL) SEE DETAIL 3 ON DWG. 56

LONDON AVE. Flow OUTFALL CANAL

C.O.E. W B/L
355°40'22.3"

NEW LEAD SPLICE STA. 84+30 (TEMPORARY AND PERMANENT)

EXIST. ELECTRIC FEEDER CABLE TO REMAIN

LIMIT OF EXIST. ELEC. FEEDER CABLE TO BE RELOCATED STA. 84+30 W B/L

PROPERTY LINE

84+00

U.S. ARMY CORPS. OF ENGINEERS W B/L

ELECTRIC FEEDER KEY PLAN
SCALE 1"=20'
20' 0 20' 40' 60' 80'

22+00

EXIST. ELECTRIC FEEDER CABLE TO REMAIN

C.O.E. E B/L
356°17'34.7"

86+00

PROPERTY LINE

LIMIT OF EXIST. ELEC. FEEDER CABLE TO BE RELOCATED STA. 85+75 E B/L

PROTECTED SIDE

W/L

EQUATION:
STA. 85+21.91 C.O.E. E B/L
STA. 22+67.98 BFM B/L "B"

EXISTING ELECTRICAL FEEDER CABLE (FL-340) SEE NOTES 1&4

LOCATION OF RELOCATED EXISTING ELECTRICAL FEEDER CABLE (FL-340) SEE NOTE 4

85+00

P.I. STA. 84+71.30(LCE-12)
C.O.E. EAST BASELINE

EXISTING ELECTRICAL FEEDER CABLE (FL-432) SEE NOTE 7

W/L

PROPERTY LINE

C.O.E. E B/L
356°48'48.4"

LIMIT OF EXIST. ELEC. FEEDER CABLE TO BE RELOCATED STA. 84+10 E B/L

84+00

C.O.E. E B/L
356°43'37.9"

P.I. STA. 84+02.42(LCE-11)
C.O.E. EAST BASELINE

U.S. ARMY CORPS. OF ENGINEERS E B/L

PROPERTY LINE

NOTES:

1. EACH EXISTING FEEDERS FL-340 AND FL-400 CONSIST OF A THREE CONDUCTOR STEEL ARMORED SUBMARINE, 400 MCM COPPER, RUBBER INSULATED, LEAD COVERED 15 KV POWER CABLE.
2. THE EXISTING FEEDER FL-400 BETWEEN STA. 84+30 AND 86+14 C.O.E. W/BL SHALL BE TEMPORARILY REROUTED FROM IT'S EXISTING POSITION INTO A TRENCH ON THE CANAL SIDE OF THE EXISTING FLOODWALL PRIOR TO DEMOLITION OF THE EXISTING FLOODWALL. THE TEMPORARY FEEDER SHALL BE COVERED WITH A STRIP OF ONE-QUARTER INCH THICK STEEL PLATE. THE TEMPORARY FEEDER SHALL CONSIST OF A 15 KV, TYPE MV-105, OKOGUARD, 133% INSULATION LEVEL, 500 MCM, 3/COND. C-L-X CABLE WITH OKOSEAL JACKET. THE FEEDER SHALL BE ATTACHED ALONG THE NEW AND EXISTING FLOODWALL ON BOTH THE NORTH AND SOUTH SIDES OF THE BRIDGE AS SHOWN. ONE (1) TEMPORARY 15 KV STANDARD CABLE SPLICE KIT (RAYCHEM-TYPE HVS WITH SHRINKABLE BREAKOUT BOOT) SHALL BE REQUIRED AT STA. 84+30 AND 86+14. REMOVE THE OLD SECTION OF CABLE ONCE THE TEMPORARY CABLE IS OPERATIONAL.
3. AFTER THE NEW FLOODWALL IS COMPLETED, THE NEW PERMANENT FEEDER FL-400 SHALL BE INSTALLED AS SHOWN. THE NEW FEEDER SHALL CONSIST OF A 15 KV, TYPE MV-105, OKOGUARD-OKOSEAL, 133% INSULATION LEVEL, 500 MCM, 3/COND., SHIELDED, LEAD COVERED PVC JACKET CABLE INSTALL IN A FIVE (5") GALV. STEEL CONDUIT AND ATTACH TO FLOODWALL WITH 5" MALLEABLE IRON ONE-HOLE CLAMPS W/CLAMP BACK. ONE PERMANENT 15 KV STRAIGHT LEAD CABLE SPLICE KIT SHALL BE REQUIRED AT STA. 84+30 AND STA. 86+14. REMOVE THE TEMPORARY CABLE ONCE THE PERMANENT CABLE IS OPERATIONAL.
4. THE EXISTING FEEDER (FL-340) BETWEEN STA. 84+10 AND 85+75 C.O.E. E B/L SHALL REMAIN IN PLACE. AFTER COMPLETION OF NEW BRIDGE AND FLOODWALL, THE EXISTING FEEDER SHALL BE PERMANENTLY ATTACHED TO THE EXISTING AND NEW FLOODWALL WITH FIVE (5") INCH MALLEABLE IRON ONE-HOLE CLAMPS W/CLAMP BACK.
5. THE CONTRACTOR SHALL AVOID EXCESSIVE OR ERRATIC MOVEMENT OF FEEDER CABLE WITH SPECIAL ATTENTION PAID TO THE EXISTING SPLICES WHICH CANNOT WITHSTAND ANY GREAT DEGREE OF MOVEMENT OR BENDING. ANY EXISTING SPLICES DAMAGED SHALL BE REPAIRED BY THE CONTRACTOR AT NO EXPENSE TO THE GOVERNMENT.
6. THE CONTRACTOR SHALL USE EXTREME CAUTION WHEN REMOVING EACH EXISTING FLOODWALL.
7. THE EXISTING FEEDER (FL-432) SHALL REMAIN IN PLACE.

REFERENCE DRAWINGS

FOR GENERAL NOTES, SEE DWG. 4
FOR PLAN/PROFILE, SEE DWG. 47
FOR UTILITY PLAN, SEE DWG. 52
FOR UTILITY DISPOSITION, SEE DWG. 53
FOR ELECTRICAL FEEDER DETAILS, SEE DWG. 55 & 56

SYMBOL	DESCRIPTION	DATE	APPROVED
	REVISIONS		

U.S. ARMY ENGINEER DISTRICT, NEW ORLEANS
CORPS OF ENGINEERS
NEW ORLEANS, LOUISIANA

BOARD OF LEVEE COMMISSIONERS
ORLEANS LEVEE DISTRICT
NEW ORLEANS, LOUISIANA

MEYER ENGINEERS, LTD. METAIRIE, LOUISIANA

LAKE PONTCHARTRAIN, LA. AND VICINITY
HIGH LEVEL PLAN

LONDON AVE. OUTFALL CANAL, PARALLEL PROTECTION FLOODPROOFING OF MIRABEAU AVE. & FILMORE AVE. BRIDGES
ORLEANS PARISH, LOUISIANA

FILMORE AVENUE SEALED BRIDGE ELECTRIC FEEDER RELOCATION PLAN

DESIGNED BY: JCS	DATE: 3-12-01	PLOT SCALE: 1"=20'	PLOT DATE: 6-27-01
DRAWN BY: MJF			
CHECKED BY: JCS	CADD FILE: 93602B55		FILE NO. H-4-4461
SUBMITTED BY: MEYER ENGINEERS, LTD. DESIGN ENGINEER	SOLICITATION NO. DACW29-01-B-0092		DWG. 55 OF 97

VALUE ENGINEERING INCENTIVE CLAUSES — YOUR KEY TO HIGHER PROFITS

C•A•D

Safety is a Part of Your Contract

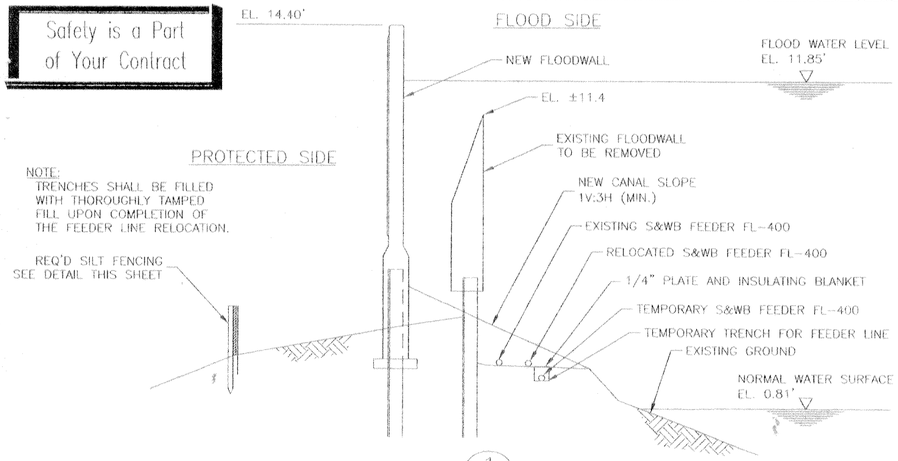

SECTION 1 (55|56)
SCALE: 1/4"=1'-0"

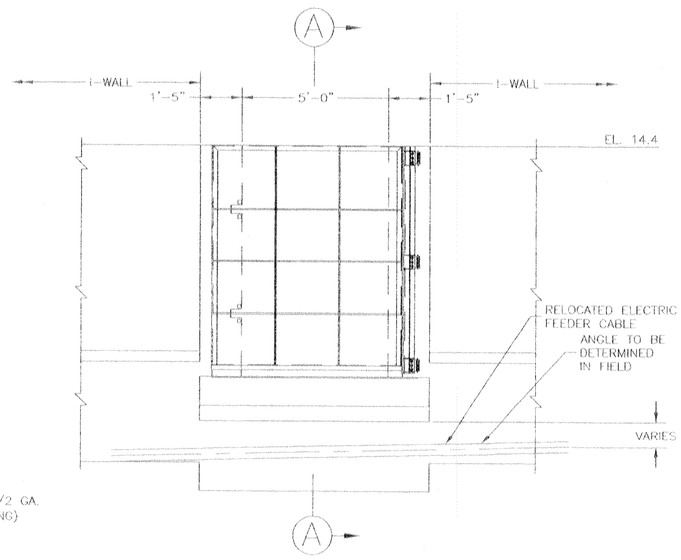

ELECTRIC FEEDER LINE RELOCATED
UNDERNEATH PEDESTRIAN GATE
ELEVATION

DETAIL 2 (55|56)
SCALE: 1/2"=1'-0"

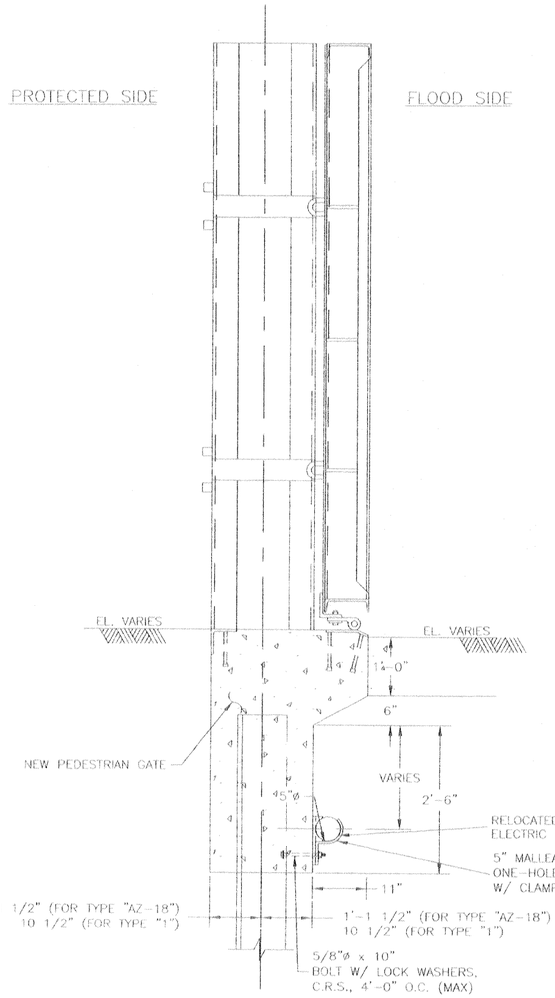

ELECTRIC FEEDER LINE RELOCATED
UNDERNEATH PEDESTRIAN GATE
SECTION

SECTION (A)
SCALE: 1" = 1'-0"

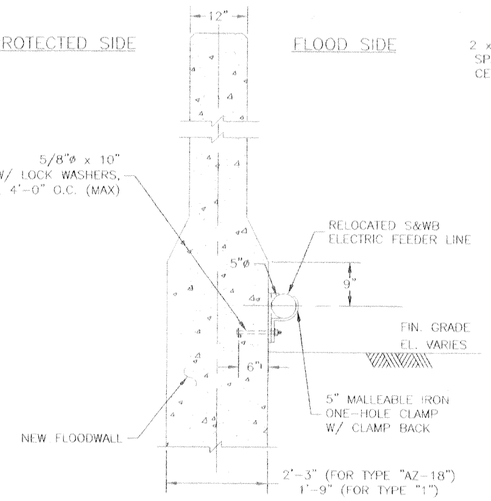

ELECTRIC FEEDER LINE RELOCATED
CONNECTED TO FLOODWALL

DETAIL 3 (55|56)
SCALE: 1"=1'-0"

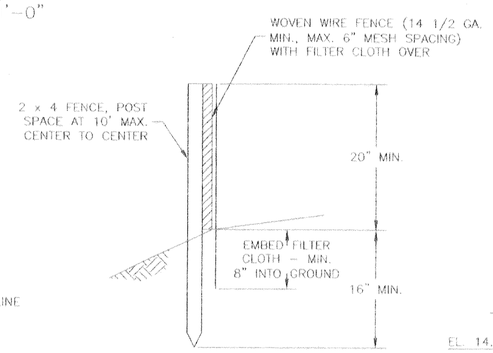

SILT FENCE

DETAIL 4 (55|56)
SCALE: 1"=1'-0"

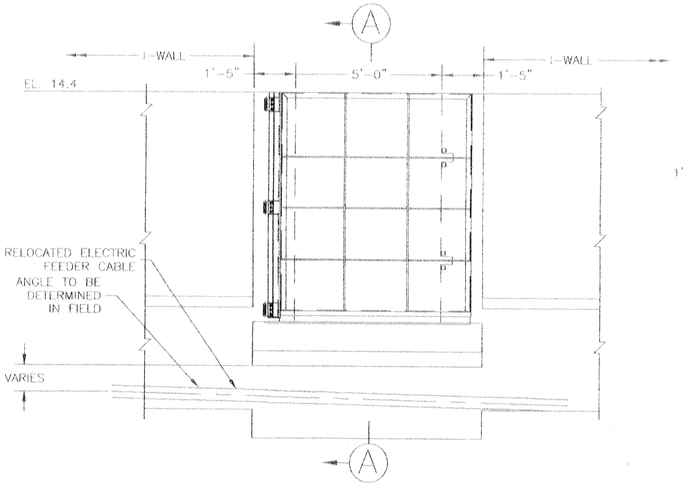

ELECTRIC FEEDER LINE RELOCATED
UNDERNEATH PEDESTRIAN GATE ELEVATION

DETAIL 5 (55|56)
SCALE: 1/2"=1'-0"

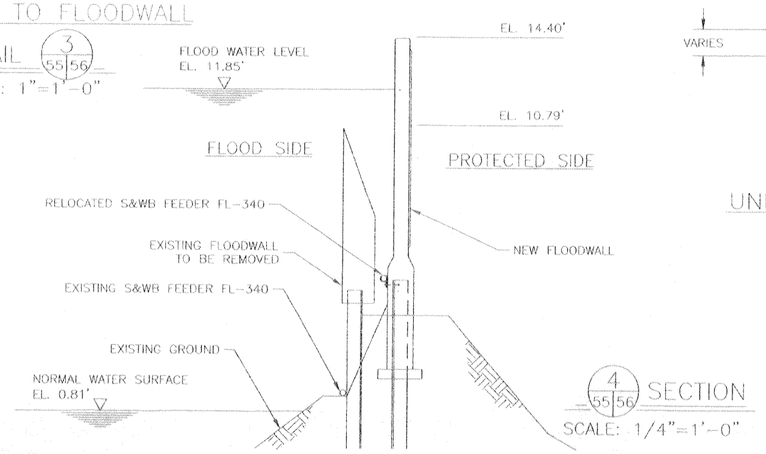

4 (55|56) SECTION
SCALE: 1/4"=1'-0"

REFERENCE DRAWINGS

FOR GENERAL NOTES, SEE DWG. NO. 4
FOR FLOODWALL PLAN, SEE DWG. NO. 47
FOR DETAILED FLOODWALL PLAN, SEE DWG. NO. 60
FOR FLOODWALL DETAILS, SEE DWG. NO. 61-64
FOR I-WALL REINFORCING, SEE DWG. NO. 65
FOR PEDESTRIAN GATE DETAILS, SEE DWG. NO. 66 & 67

SCALE: 1/2 " = 1' - 0"
12" 0 2' 4' 6' 8'

SCALE: 1/4 " = 1'- 0"
12"0 5' 10' 15' 20'

SCALE: 1" = 1'- 0"
12" 0 1' 2' 3' 4' 5'

VALUE ENGINEERING INCENTIVE CLAUSES — YOUR KEY TO HIGHER PROFITS

SYMBOL	DESCRIPTION	DATE	APPROVED
	REVISIONS		

U.S. ARMY ENGINEER DISTRICT, NEW ORLEANS
CORPS OF ENGINEERS
NEW ORLEANS, LOUISIANA

BOARD OF LEVEE COMMISSIONERS
ORLEANS LEVEE DISTRICT
NEW ORLEANS, LOUISIANA

MEYER ENGINEERS, LTD. METAIRIE LOUISIANA
LAKE PONTCHARTRAIN, LA. AND VICINITY
HIGH LEVEL PLAN

LONDON AVE. OUTFALL CANAL, PARALLEL
PROTECTION FLOODPROOFING OF
MIRABEAU AVE. & FILMORE AVE. BRIDGES
ORLEANS PARISH, LOUISIANA

FILMORE AVENUE SEALED BRIDGE
ELECTRIC FEEDER RELOCATION DETAILS

DESIGNED BY: JCS	DATE: 3-12-01	PLOT SCALE: 1"=1'	PLOT DATE: 6-27-01
DRAWN BY: MJF			
CHECKED BY: JCS	CAD FILE: 9363B56		FILE NO. H-4-44674
SUBMITTED BY: MEYER ENGINEERS, LTD. DESIGN ENGINEER	SOLICITATION NO. DACW29-01-B-0092		DWG 56 OF 97

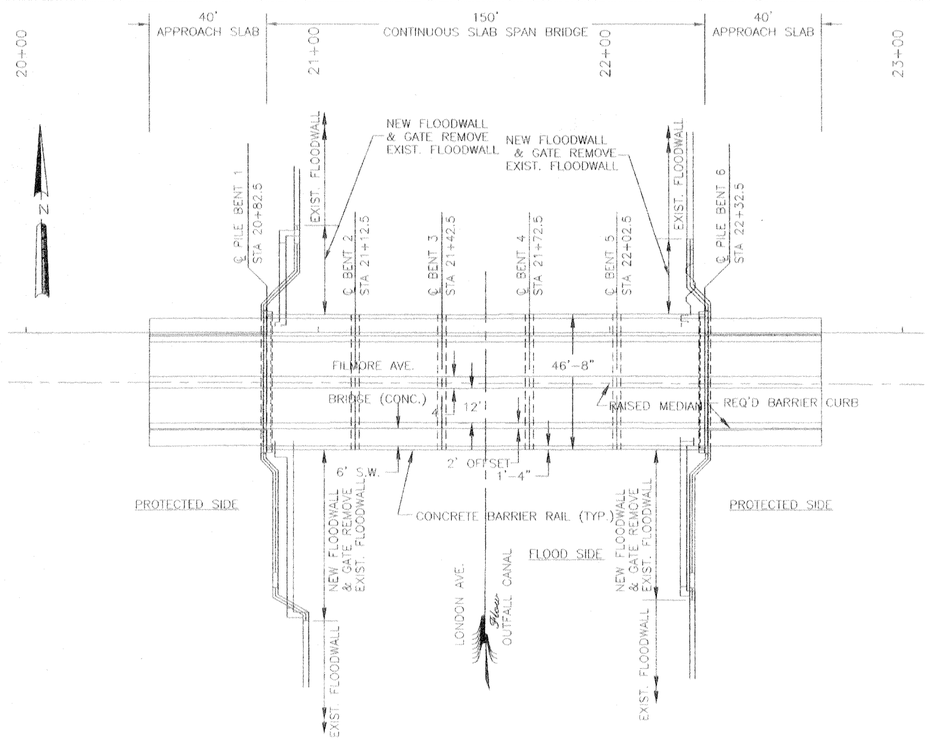

STRUCTURE PLAN

SCALE: 1" = 20'

20' 0 20' 40' 60' 80'

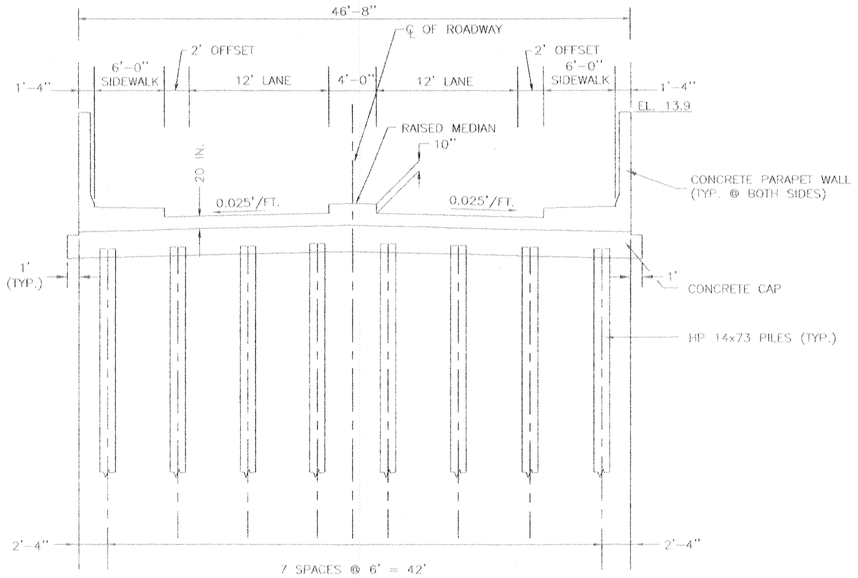

SECTION A-A
STRUCTURE SECTION

SCALE: 1" = 5'

5' 0 5' 10' 15' 20'

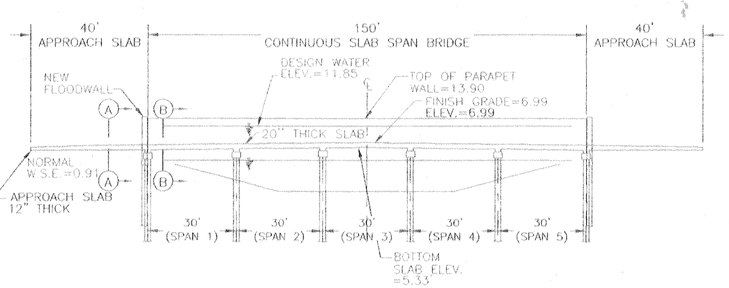

STRUCTURE ELEVATION

SCALE: 1" = 20'

20' 0 20' 40' 60' 80'

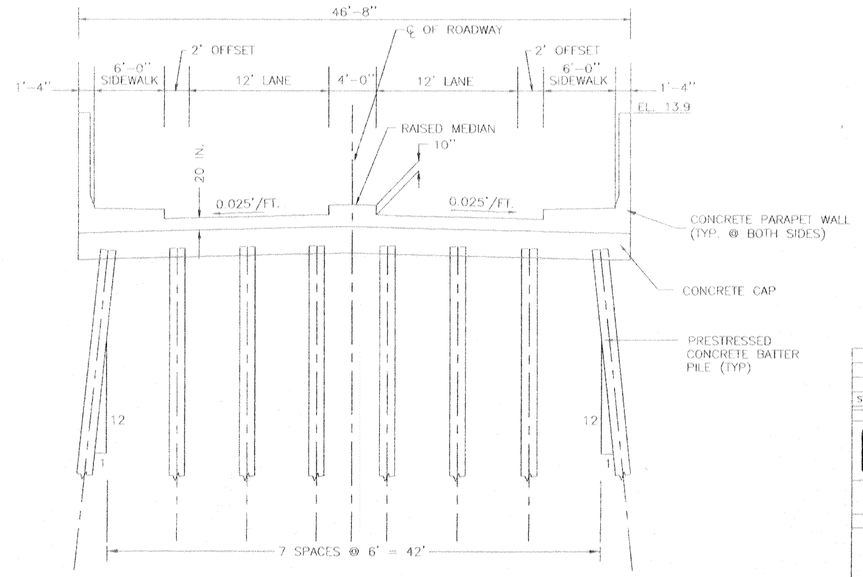

SECTION B-B
STRUCTURE SECTION

SCALE: 1" = 5'

5' 0 5' 10' 15' 20'

Safety is a Part of Your Contract

C•A•D

VALUE ENGINEERING INCENTIVE CLAUSES — YOUR KEY TO HIGHER PROFITS

SYMBOL	DESCRIPTION	DATE	APPROVED
	REVISIONS		

U.S. ARMY ENGINEER DISTRICT, NEW ORLEANS
CORPS OF ENGINEERS
NEW ORLEANS, LOUISIANA

BOARD OF LEVEE COMMISSIONERS
ORLEANS LEVEE DISTRICT
NEW ORLEANS, LOUISIANA

MEYER ENGINEERS, LTD. METAIRIE, LOUISIANA

LAKE PONTCHARTRAIN, LA. AND VICINITY
HIGH LEVEL PLAN
LONDON AVE. OUTFALL CANAL, PARALLEL PROTECTION FLOODPROOFING OF FILMORE AVE. & MIRABEAU AVE. BRIDGES
ORLEANS PARISH, LOUISIANA

FILMORE AVENUE SEALED BRIDGE STRUCTURE PLAN AND ELEVATION

DESIGNED BY: JCS	DATE: 3-12-01	PLOT SCALE: 1"=20'	PLOT DATE: 6-27-01
DRAWN BY: MJF			
CHECKED BY: JCS	CADD FILE: 9362857		FILE NO. H-4-4461
SUBMITTED BY: MEYER ENGINEERS, LTD. DESIGN ENGINEER	SOLICITATION NO. DACW29-01-B-0092		DWG. 57 OF 97

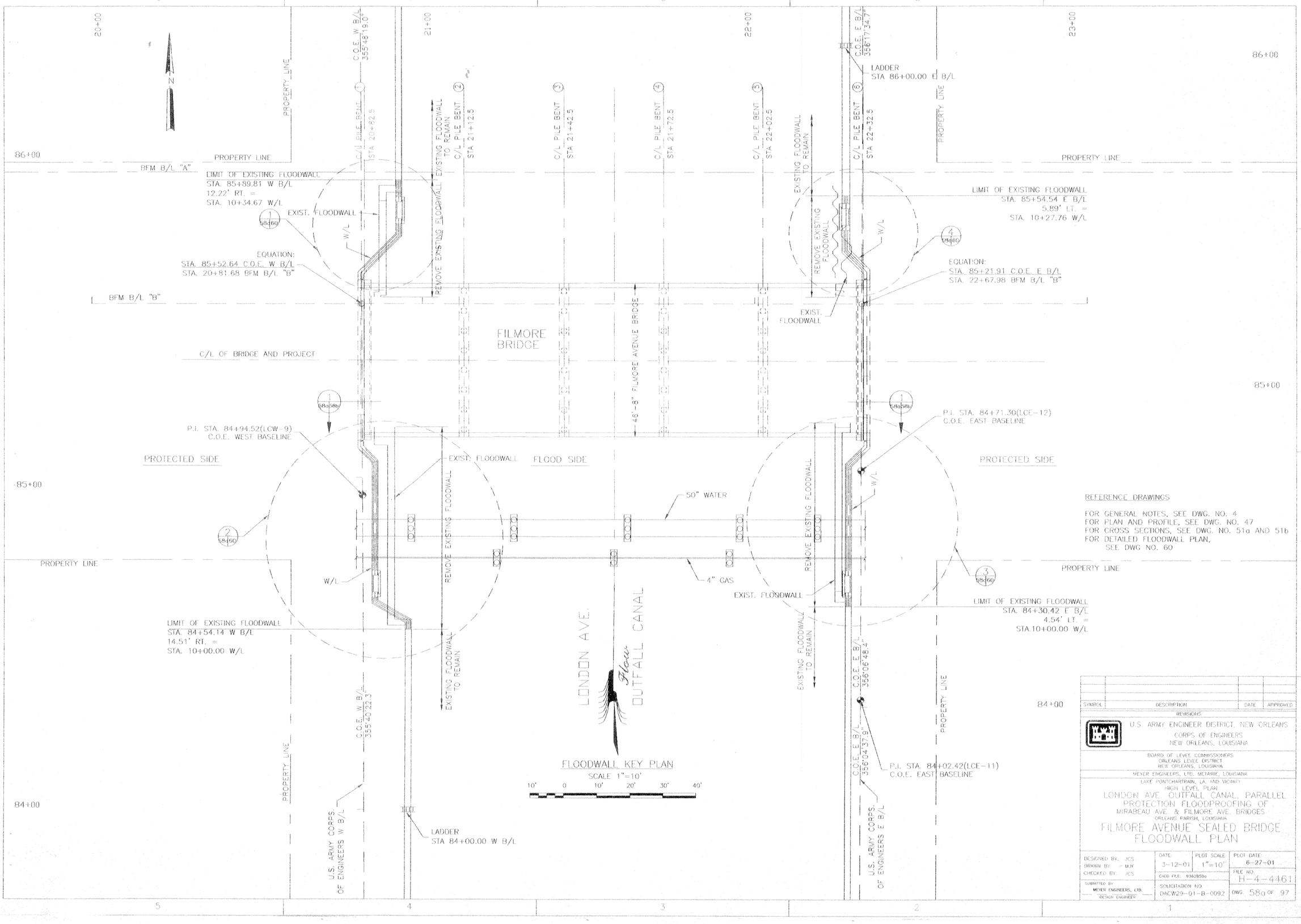

REFERENCE DRAWINGS

FOR GENERAL NOTES, SEE DWG. NO. 4
FOR PLAN AND PROFILE, SEE DWG. NO. 47
FOR CROSS SECTIONS, SEE DWG. NO. 51a AND 51b
FOR DETAILED FLOODWALL PLAN,
SEE DWG NO. 60

SYMBOL	DESCRIPTION	DATE	APPROVED

REVISIONS

U.S. ARMY ENGINEER DISTRICT, NEW ORLEANS
CORPS OF ENGINEERS
NEW ORLEANS, LOUISIANA

BOARD OF LEVEE COMMISSIONERS
ORLEANS LEVEE DISTRICT
NEW ORLEANS, LOUISIANA

MEYER ENGINEERS, LTD. METAIRIE, LOUISIANA

LAKE PONTCHARTRAIN, LA. AND VICINITY
HIGH LEVEL PLAN

LONDON AVE. OUTFALL CANAL, PARALLEL PROTECTION FLOODPROOFING OF MIRABEAU AVE. & FILMORE AVE. BRIDGES

ORLEANS PARISH, LOUISIANA

FILMORE AVENUE SEALED BRIDGE FLOODWALL PLAN

DESIGNED BY: JCS	DATE: 3-12-01	PLOT SCALE: 1"=10'	PLOT DATE: 6-27-01
DRAWN BY: MJF			
CHECKED BY: JCS	CADD FILE: 9362B58a		FILE NO. H-4-4461
SUBMITTED BY: MEYER ENGINEERS, LTD. DESIGN ENGINEER	SOLICITATION NO. DACW29-01-B-0092		DWG. 58a OF 97

Safety is a Part of Your Contract

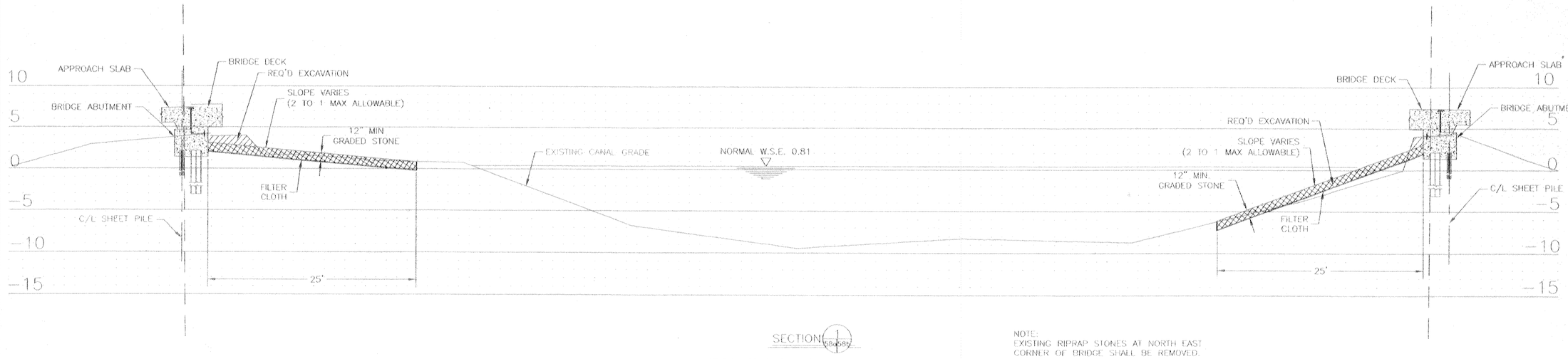

SECTION 1
68+59

STATION 85+08.04 W B/L TO 85+62.90 W B/L
STATION 84+77.40 E B/L TO 85+32.20 E B/L

NOTE:
EXISTING RIPRAP STONES AT NORTH EAST CORNER OF BRIDGE SHALL BE REMOVED.

10' 0 10' 20'
SCALE: 1" = 10'

SYMBOL	DESCRIPTION	DATE	APPROVED

REVISIONS

U.S. ARMY ENGINEER DISTRICT, NEW ORLEANS
CORPS OF ENGINEERS
NEW ORLEANS, LOUISIANA

BOARD OF LEVEE COMMISSIONERS
ORLEANS LEVEE DISTRICT
NEW ORLEANS, LOUISIANA

MEYER ENGINEERS, LTD. METAIRIE, LOUISIANA
LAKE PONTCHARTRAIN, LA. AND VICINITY
HIGH LEVEL PLAN

LONDON AVE. OUTFALL CANAL, PARALLEL PROTECTION FLOODPROOFING OF MIRABEAU AVE. & FILMORE AVE. BRIDGES
ORLEANS PARISH, LOUISIANA

FILMORE AVENUE SEALED BRIDGE
BRIDGE & CANAL - SECTIONS

DESIGNED BY: JCS DRAWN BY: MJF CHECKED BY: JCS	DATE: 3-12-01	PLOT SCALE: 1"=10'	PLOT DATE: 6-27-01
	CADD FILE: 936295lb		FILE NO. H-4-44674
SUBMITTED BY: MEYER ENGINEERS, LTD. DESIGN ENGINEER	SOLICITATION NO. DACW29-01-B-0092		DWG: 58b OF 97

VALUE INCENTIVE CLAUSES ENGINEERING
YOUR KEY TO HIGHER PROFITS

C•A•D

Safety is a Part of Your Contract

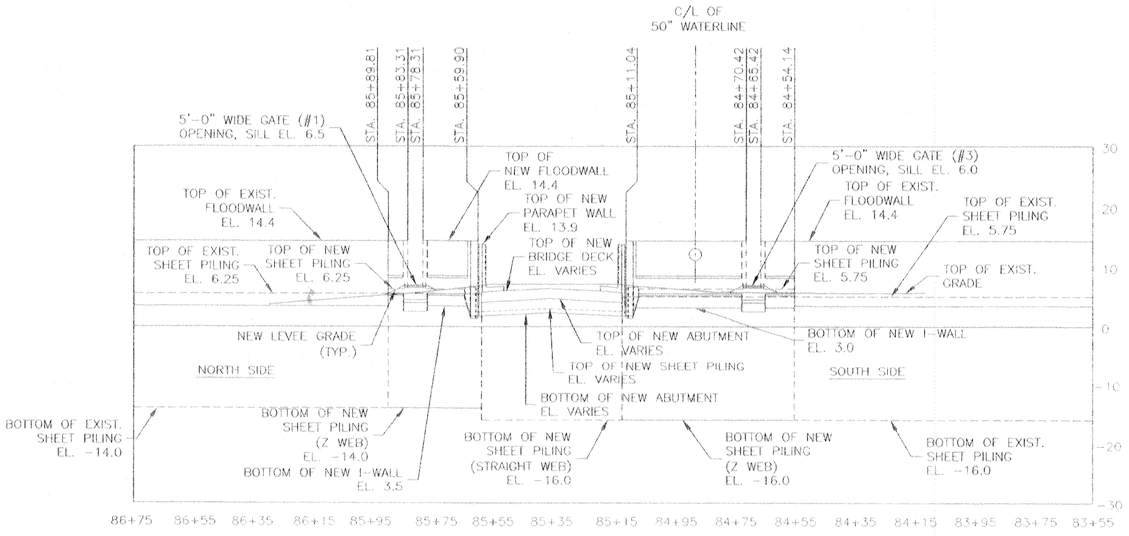

WEST PROFILE – LAND SIDE

SCALE: HOR. 1"=20'
VERT. 1"=10'

NOTE:
ALL ELEVATIONS ARE 1964 EPOCH UNLESS OTHERWISE NOTED.

NOTE:
EXISTING I-WALLS TO BE REMOVED NOT SHOWN FOR CLARITY, SEE DWG.50 FOR LIMITS AND LOCATION OF THESE I-WALLS

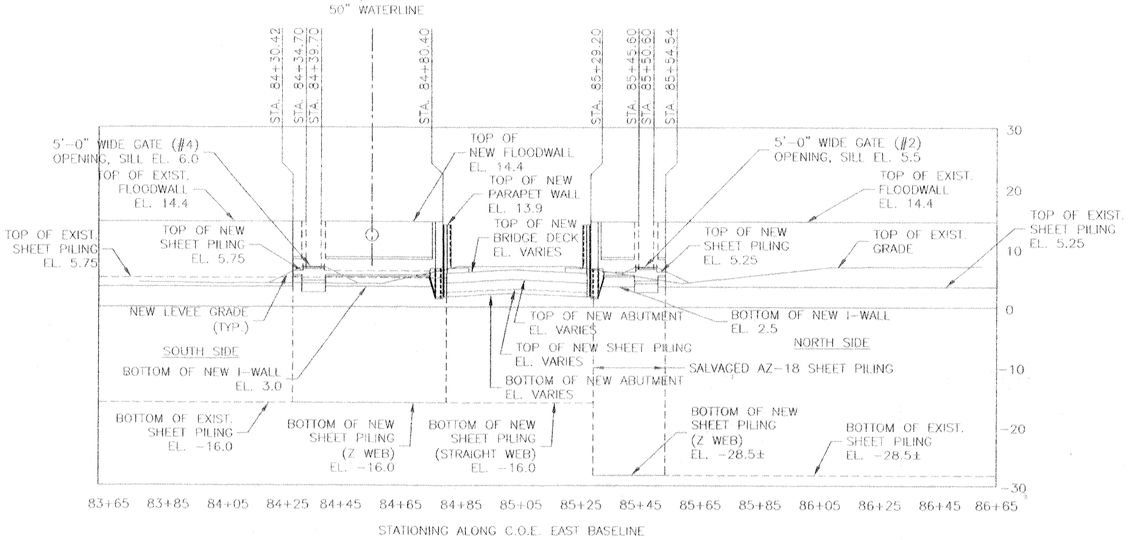

EAST PROFILE – LAND SIDE

SCALE: HOR. 1"=20'
VERT. 1"=10'

NOTE:
ALL ELEVATIONS ARE 1964 EPOCH UNLESS OTHERWISE NOTED.

SCALE 1"=20'
10' 0 10' 20' 30' 40'

SYMBOL	DESCRIPTION	DATE	APPROVED
	REVISIONS		

U.S. ARMY ENGINEER DISTRICT, NEW ORLEANS
CORPS OF ENGINEERS
NEW ORLEANS, LOUISIANA

BOARD OF LEVEE COMMISSIONERS
ORLEANS LEVEE DISTRICT
NEW ORLEANS, LOUISIANA

MEYER ENGINEERS, LTD. METAIRIE, LOUISIANA
LAKE PONTCHARTRAIN, LA. AND VICINITY

HIGH LEVEL PLAN
LONDON AVE. OUTFALL CANAL, PARALLEL PROTECTION FLOODPROOFING OF FILMORE AVE. & MIRABEAU AVE. BRIDGES
ORLEANS PARISH, LOUISIANA

FILMORE AVENUE SEALED BRIDGE ABUTMENT AND I-WALL PROFILES

DESIGNED BY: JCS	DATE: 3-12-01	PLOT SCALE: 1"=20'	PLOT DATE: 6-27-01
DRAWN BY: MJF			
CHECKED BY: JCS	CADD FILE: 936259		FILE NO. H-4-44674
SUBMITTED BY: MEYER ENGINEERS, LTD. DESIGN ENGINEER	SOLICITATION NO. DACW29-01-B-0092		DWG. 59 OF 97

VALUE ENGINEERING INCENTIVE CLAUSES
YOUR KEY TO HIGHER PROFITS

C•A•D

Safety is a Part of Your Contract

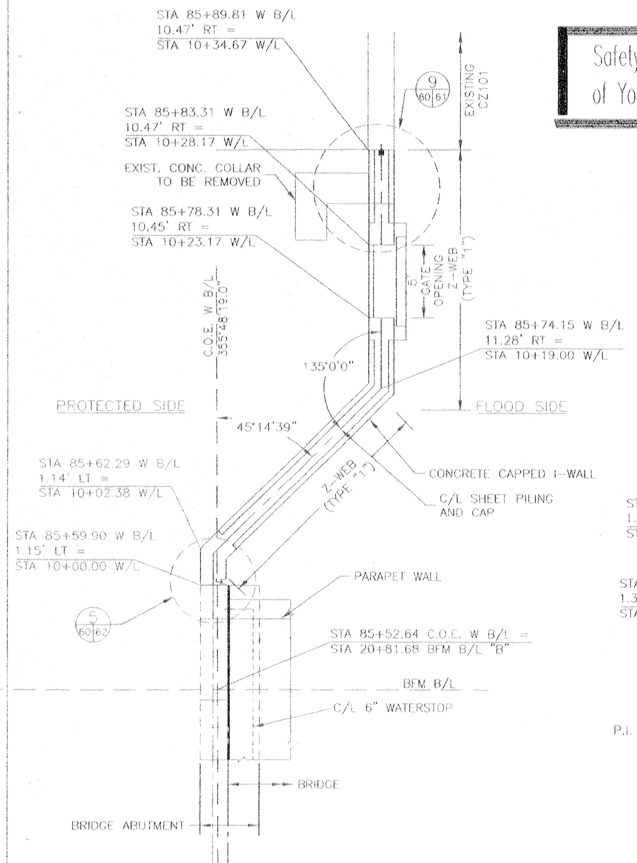

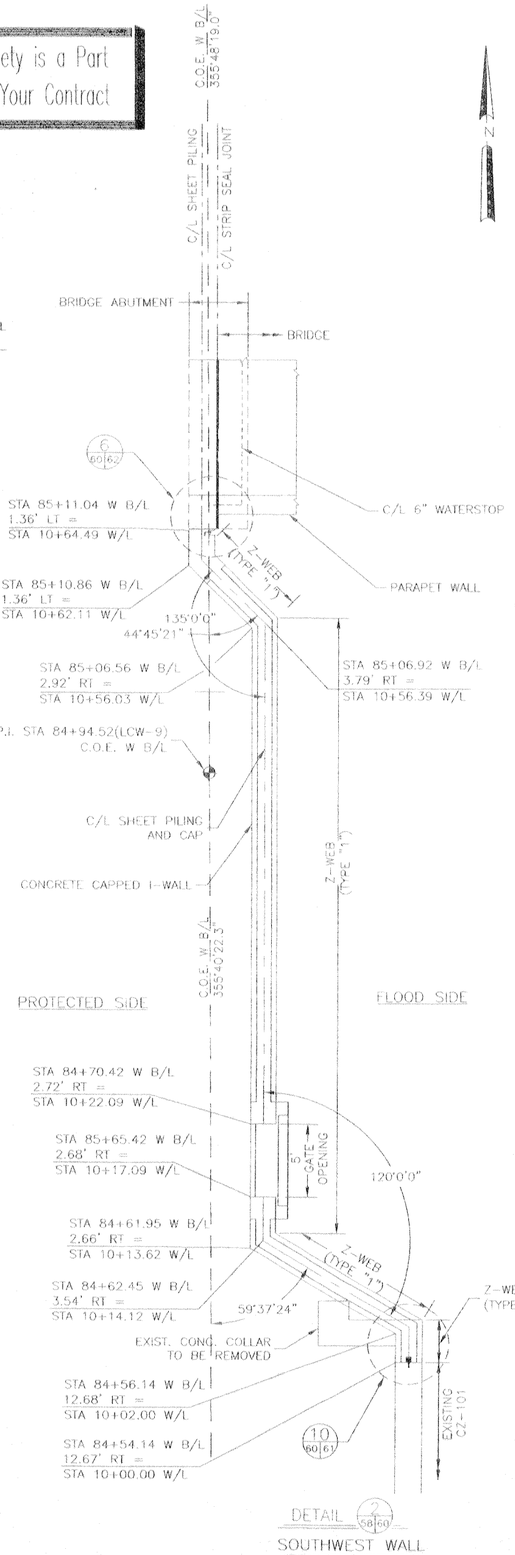

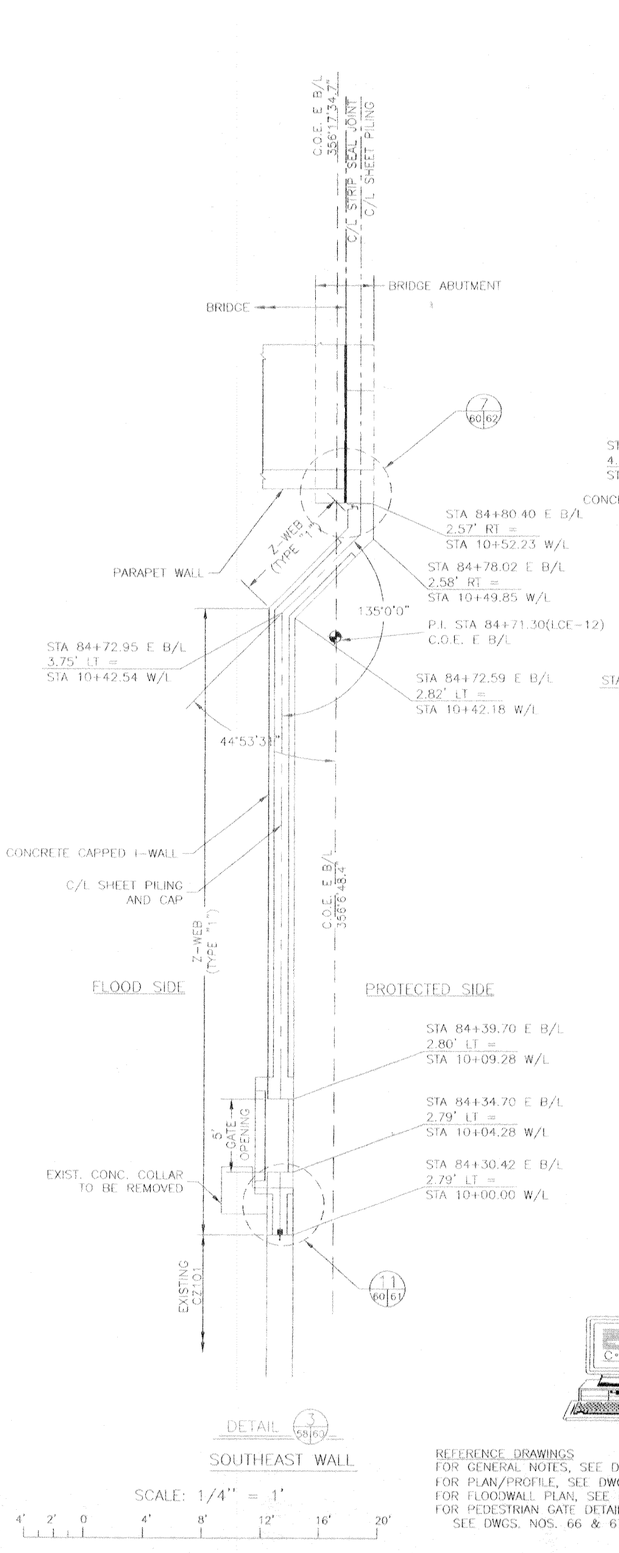

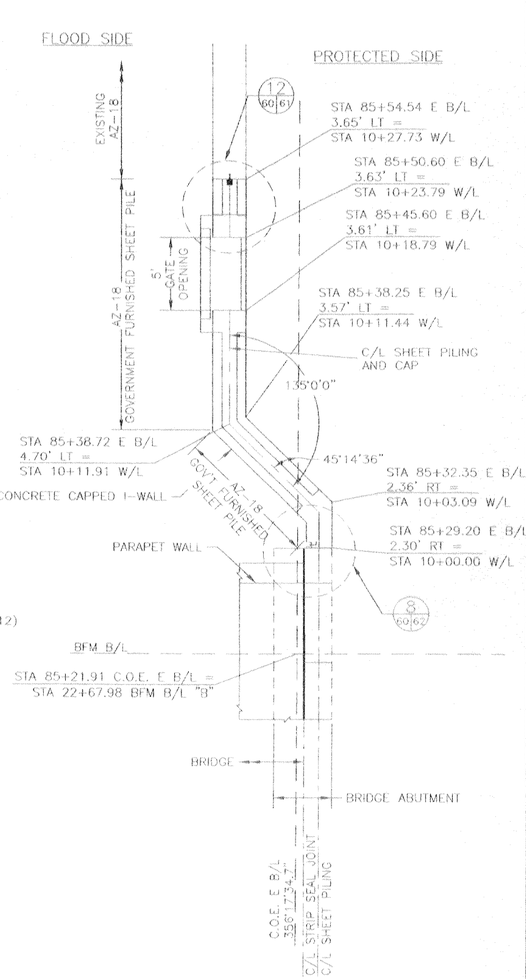

SCALE: 1/4" = 1'

4' 2' 0 4' 8' 12' 16' 20'

REFERENCE DRAWINGS
FOR GENERAL NOTES, SEE DWG. NO. 4
FOR PLAN/PROFILE, SEE DWG. NO. 47
FOR FLOODWALL PLAN, SEE DWG. NO. 58
FOR PEDESTRIAN GATE DETAILS,
SEE DWGS. NOS. 66 & 67

VALUE ENGINEERING INCENTIVE CLAUSES — YOUR KEY TO HIGHER PROFITS

SYMBOL	DESCRIPTION	DATE	APPROVED
	REVISIONS		

U.S. ARMY ENGINEER DISTRICT, NEW ORLEANS
CORPS OF ENGINEERS
NEW ORLEANS, LOUISIANA

BOARD OF LEVEE COMMISSIONERS
ORLEANS LEVEE DISTRICT
NEW ORLEANS, LOUISIANA

MEYER ENGINEERS, LTD. METAIRIE, LOUISIANA
LAKE PONTCHARTRAIN, LA. AND VICINITY
HIGH LEVEL PLAN

LONDON AVE. OUTFALL CANAL, PARALLEL PROTECTION FLOODPROOFING OF MIRABEAU AVE. & FILMORE AVE. BRIDGES
ORLEANS PARISH, LOUISIANA

FILMORE AVENUE SEALED BRIDGE DETAILED FLOODWALL PLAN

DESIGNED BY: JCS	DATE: 3-12-01	PLOT SCALE: 1"=4'	PLOT DATE: 6-27-01
DRAWN BY: MJF			
CHECKED BY: JCS	CADD FILE: 936280		FILE NO. H-4-44674
SUBMITTED BY: MEYER ENGINEERS, LTD. DESIGN ENGINEER	SOLICITATION NO. DACW29-01-B-0092		DWG. 60 OF 97

Safety is a Part of Your Contract

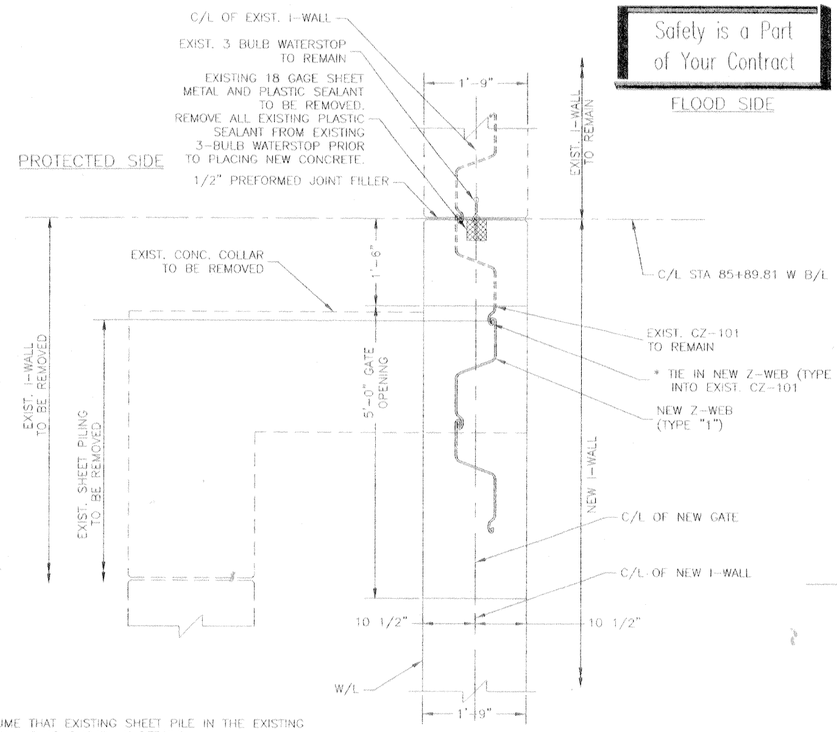

DETAIL 9 (60 61)

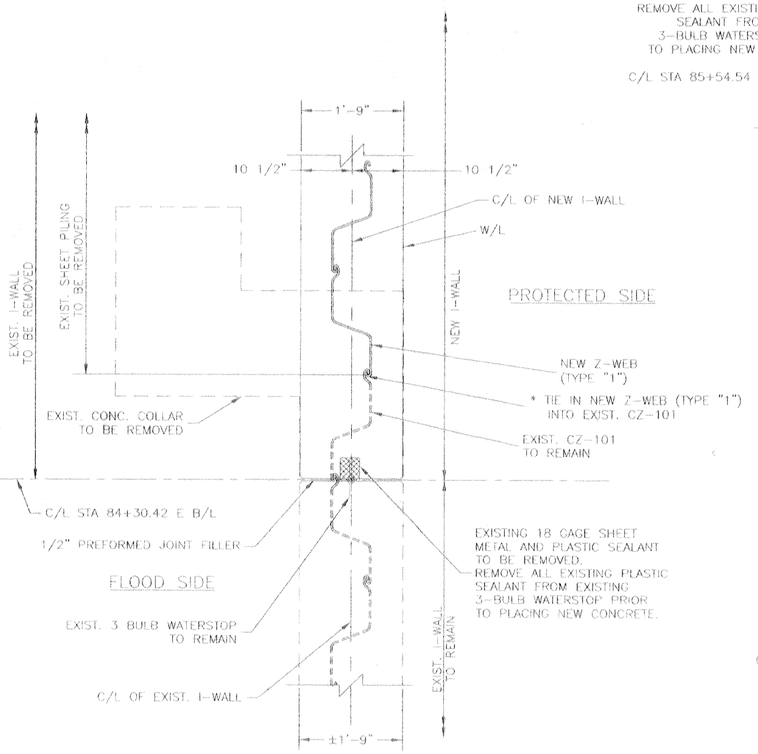

DETAIL 11 (60 61)

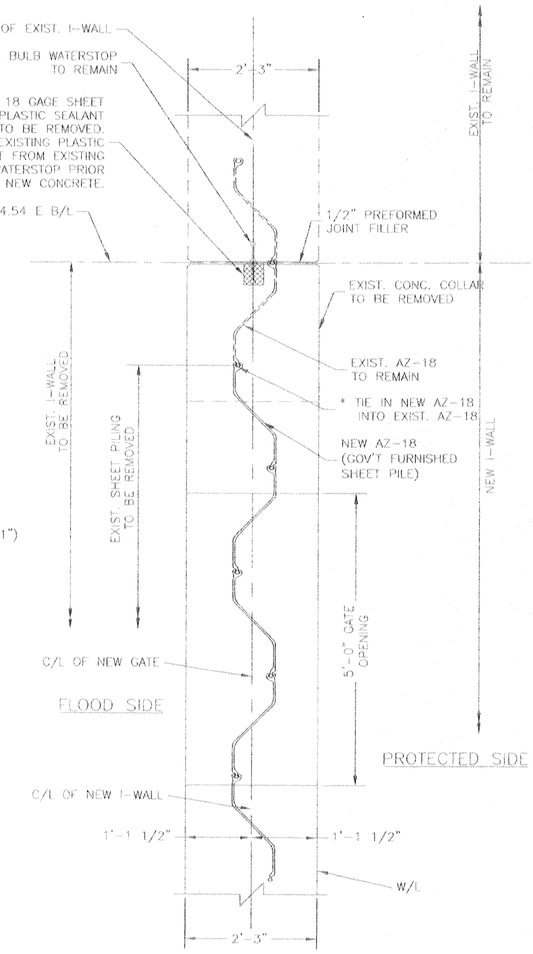

DETAIL 12 (60 61)

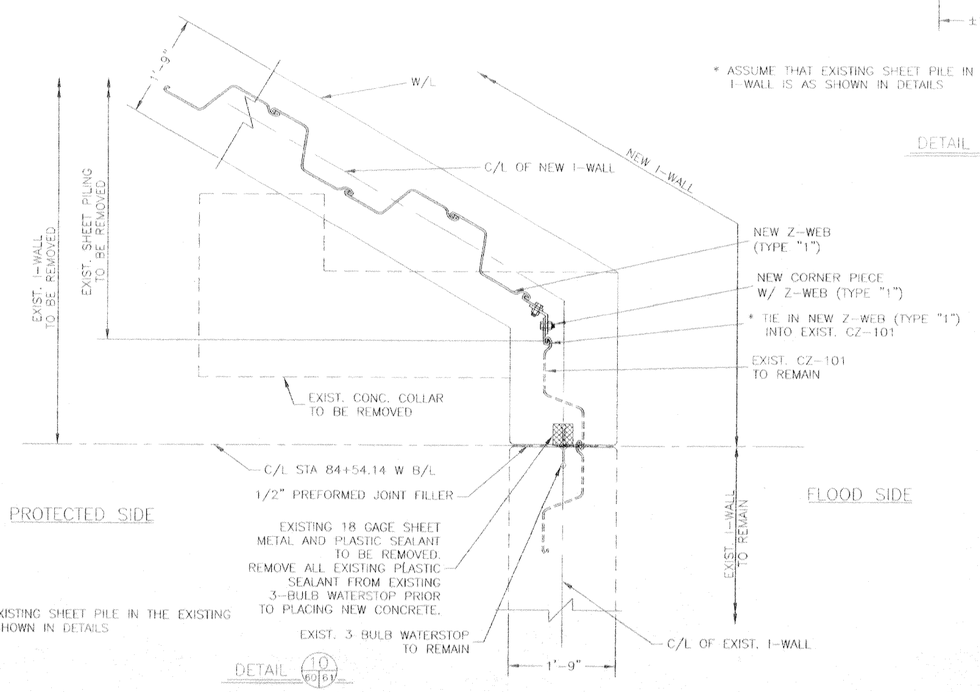

DETAIL 10 (60 61)

VALUE INCENTIVE CLAUSES IN ENGINEER'S — YOUR KEY TO HIGHER PROFITS

REFERENCE DRAWINGS

FOR GENERAL NOTES, SEE DWG. NO. 4
FOR FLOODWALL PLAN, SEE DWG. NO. 58
FOR DETAILED FLOODWALL PLAN, SEE DWG. NO. 60
FOR FLOODWALL DETAILS, SEE DWG. NO. 61 - 63
FOR I-WALL REINFORCING, SEE DWG. NO. 65
FOR GATE DETAILS, SEE DWG. NOS. 66-67

NOTE: - CONTRACTOR IS TO SUBMIT SHOP DRAWINGS FOR APPROVAL TO THE CONTRACTING OFFICER, PRIOR TO FABRICATION OF ANY MATERIALS. THESE SHOP DRAWINGS ARE TO SHOW ALL DIMENSIONS, REINFORCEMENT, AND SHEET PILE PIECES FOR THE CONNECTION.

- S&WB FEEDER LINE NOT SHOWN FOR CLARITY. FOR DETAILS, SEE DWG. NOS. 55 & 56.
- BURN HOLES IN SHEET PILING TO PASS REINFORCEMENT SEE NOTE 1, DWG. 62.

SCALE: 1" = 1'- 0"

12" 0 1' 2' 3' 4' 5'

SYMBOL	DESCRIPTION	DATE	APPROVED
	REVISIONS		

U.S. ARMY ENGINEER DISTRICT, NEW ORLEANS
CORPS OF ENGINEERS
NEW ORLEANS, LOUISIANA

BOARD OF LEVEE COMMISSIONERS
ORLEANS LEVEE DISTRICT
NEW ORLEANS, LOUISIANA

MEYER ENGINEERS, LTD. METAIRIE, LOUISIANA
LAKE PONTCHARTRAIN, LA. AND VICINITY
HIGH LEVEL PLAN

LONDON AVE. OUTFALL CANAL, PARALLEL PROTECTION FLOODPROOFING OF MIRABEAU AVE. & FILMORE AVE. BRIDGES
ORLEANS PARISH, LOUISIANA

FILMORE AVENUE SEALED BRIDGE JOINT DETAILS

DESIGNED BY: JCS	DATE: 3-12-01	PLOT SCALE: 1"=1'	PLOT DATE: 6-27-01
DRAWN BY: MJF			
CHECKED BY: JCS	CADD FILE: 9362861		FILE NO. H-4-44674
SUBMITTED BY: MEYER ENGINEERS, LTD. DESIGN ENGINEER	SOLICITATION NO. DACW29-01-B-0092		DWG. 61 OF 97

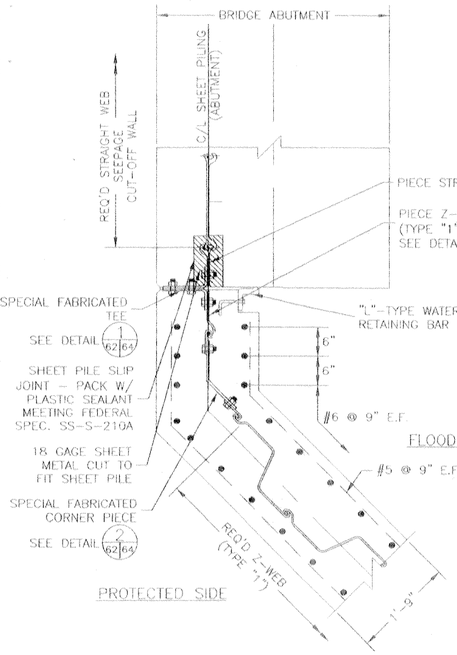

SECTION THROUGH SHEET PILE

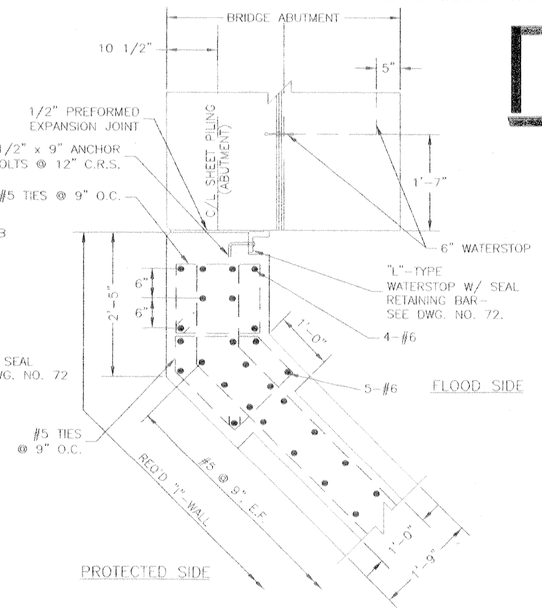

SECTION ABOVE SHEET PILE

DETAIL 5/60/62

Safety is a Part of Your Contract

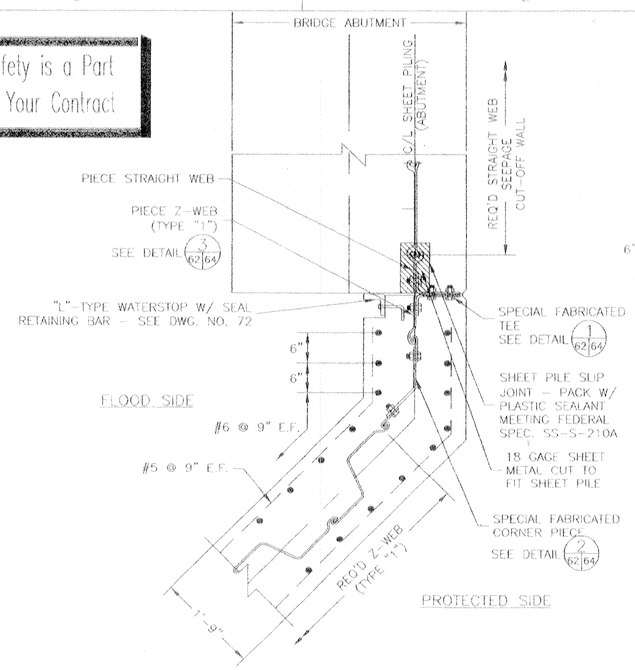

SECTION THROUGH SHEET PILE

DETAIL 7/60/62

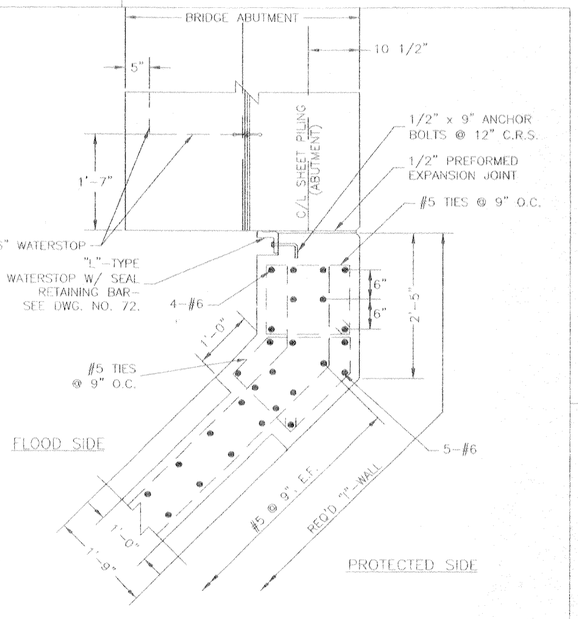

SECTION ABOVE SHEET PILE

SHEET PILE NOTES:

1. HOLES CUT IN STEEL SHEET PILING FOR PASSING REINFORCING BARS SHALL NOT EXCEED 2"ø. WHERE HOLES FALL WITHIN THE WEB OF THE STEEL SHEET PILE, THE HOLE SHALL BE SLOTTED 4" HORIZONTALLY TO ACCOMMODATE PASSING THE REINFORCING BARS.
2. ANY SUBSTITUTIONS SHALL BE SUBMITTED TO THE CONTRACTING OFFICER FOR APPROVAL.
3. STEEL SHEET PILE SURFACE PREPARATION AND PAINTING SHALL BE IN ACCORDANCE WITH SECTION 09940 OF THE SPECIFICATIONS.

REFERENCE DRAWINGS

FOR GENERAL NOTES, SEE DWG. NO. 4
FOR PLAN AND PROFILE, SEE DWG. NO. 47
FOR DETAILED FLOODWALL PLAN, SEE DWG. NO. 60

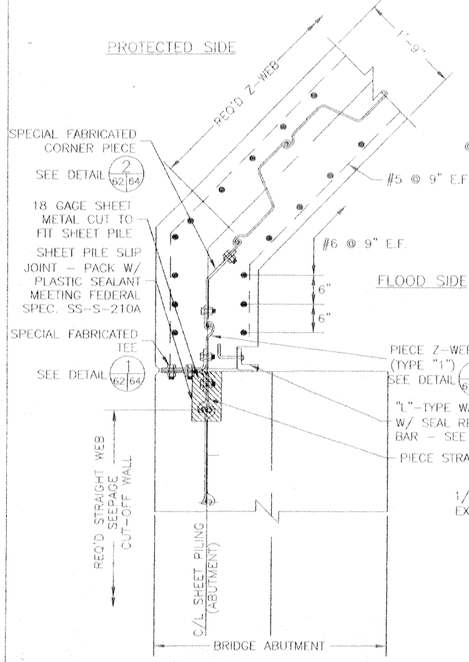

SECTION THROUGH SHEET PILE

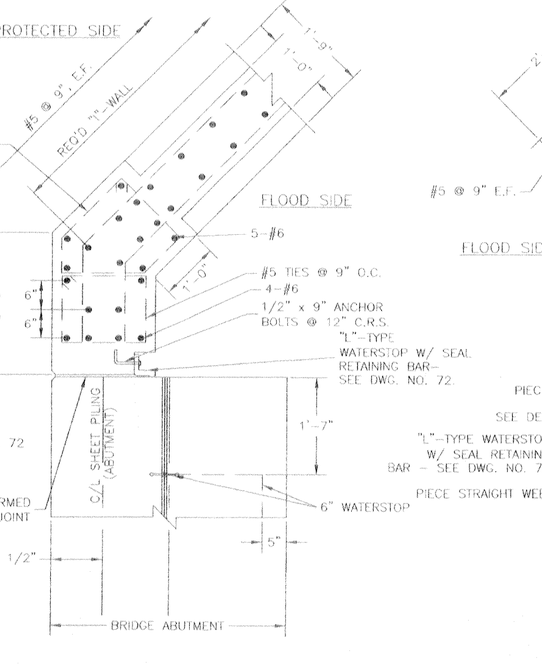

SECTION ABOVE SHEET PILE

DETAIL 5/60/62

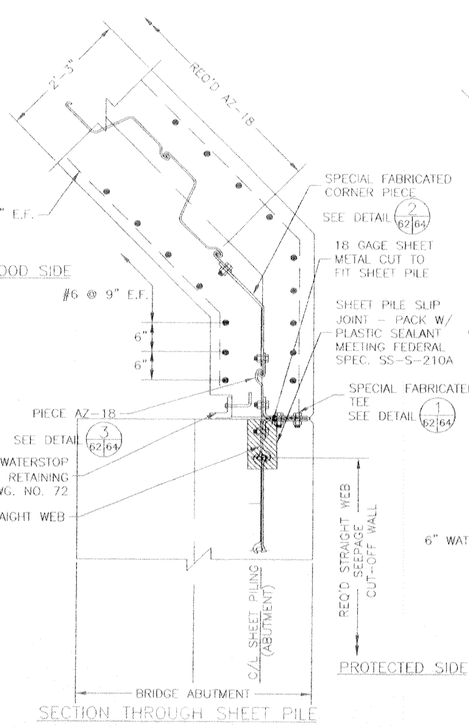

SECTION THROUGH SHEET PILE

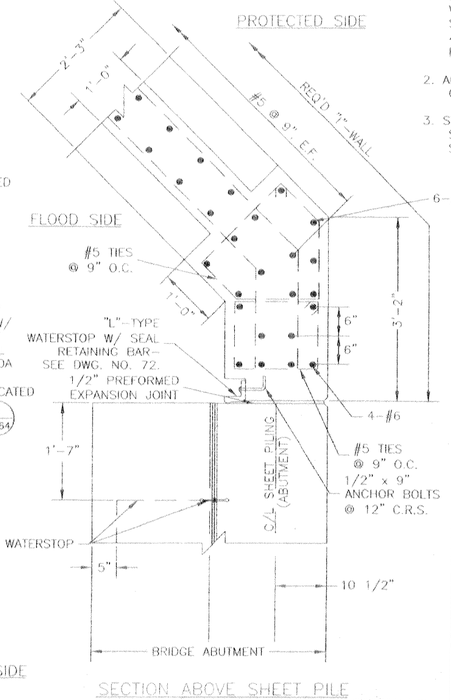

SECTION ABOVE SHEET PILE

SCALE: 1" = 1'- 0"

12" 0 1' 2' 3' 4' 5'

SYMBOL	DESCRIPTION	DATE	APPROVED

REVISIONS

U.S. ARMY ENGINEER DISTRICT, NEW ORLEANS
CORPS OF ENGINEERS
NEW ORLEANS, LOUISIANA

BOARD OF LEVEE COMMISSIONERS
ORLEANS LEVEE DISTRICT
NEW ORLEANS, LOUISIANA

MEYER ENGINEERS, LTD. METAIRIE, LOUISIANA
LAKE PONTCHARTRAIN, LA. AND VICINITY
HIGH LEVEL PLAN

LONDON AVE. OUTFALL CANAL, PARALLEL PROTECTION FLOODPROOFING OF MIRABEAU AVE. & FILMORE AVE. BRIDGES
ORLEANS PARISH, LOUISIANA

FILMORE AVENUE SEALED BRIDGE JOINT DETAILS

DESIGNED BY: JCS	DATE: 3-12-01	PLOT SCALE: 1"=1'	PLOT DATE: 6-27-01
DRAWN BY: MJF			
CHECKED BY: JCS	CADD FILE: 936282		FILE NO. H-4-44674
SUBMITTED BY: MEYER ENGINEERS, LTD. DESIGN ENGINEER	SOLICITATION NO. DACW29-01-B-0092		DWG. 62 OF 97

VALUE ENGINEERING INCENTIVE CLAUSES IN YOUR KEY TO HIGHER PROFITS

C.A.D

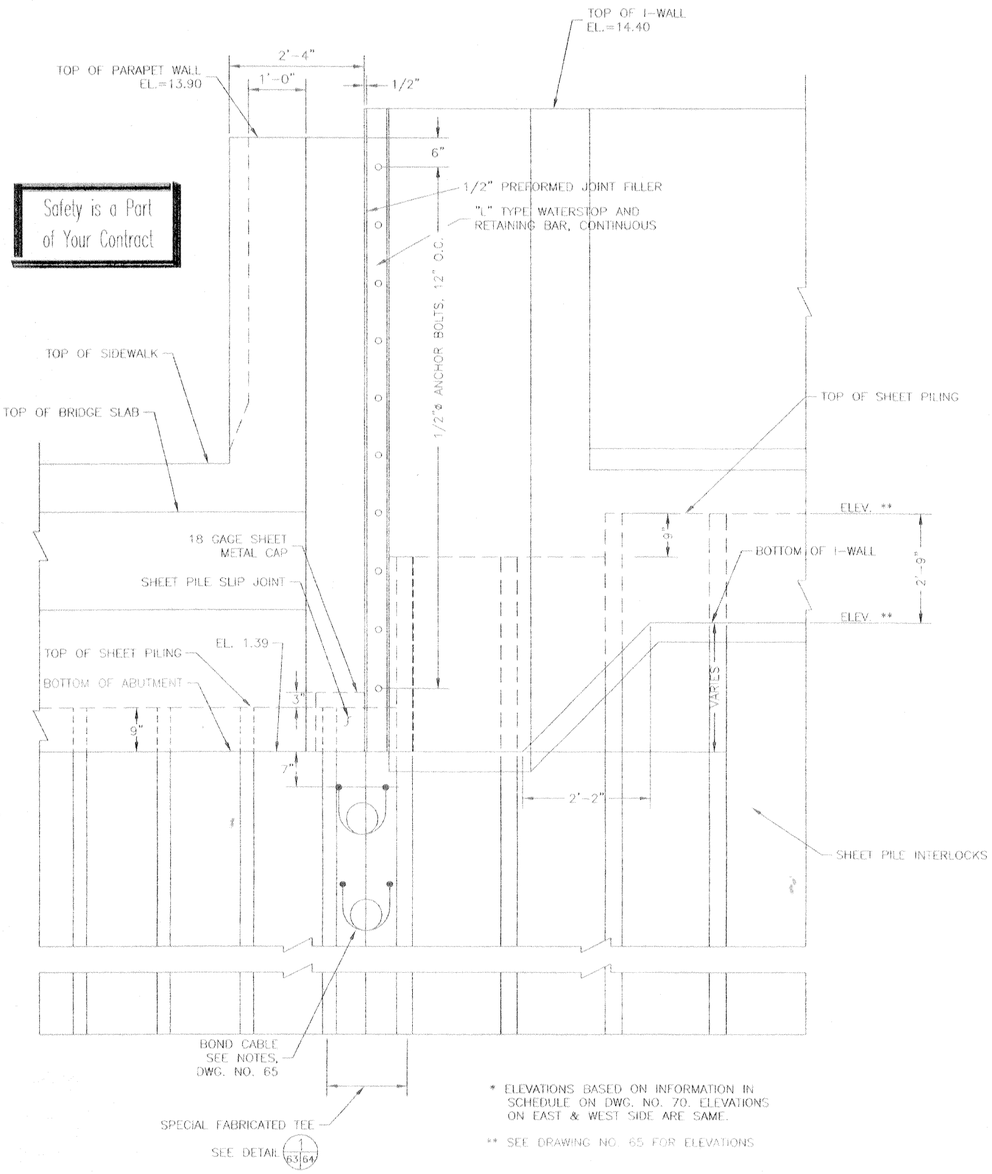

* ELEVATIONS BASED ON INFORMATION IN SCHEDULE ON DWG. NO. 70. ELEVATIONS ON EAST & WEST SIDE ARE SAME.

** SEE DRAWING NO. 65 FOR ELEVATIONS

FLOOD SIDE ELEVATION
I-WALL TO ABUTMENT
(SOUTHEAST CORNER SHOWN, OTHERS SIMILAR)
SCALE: 1" = 1'-0"

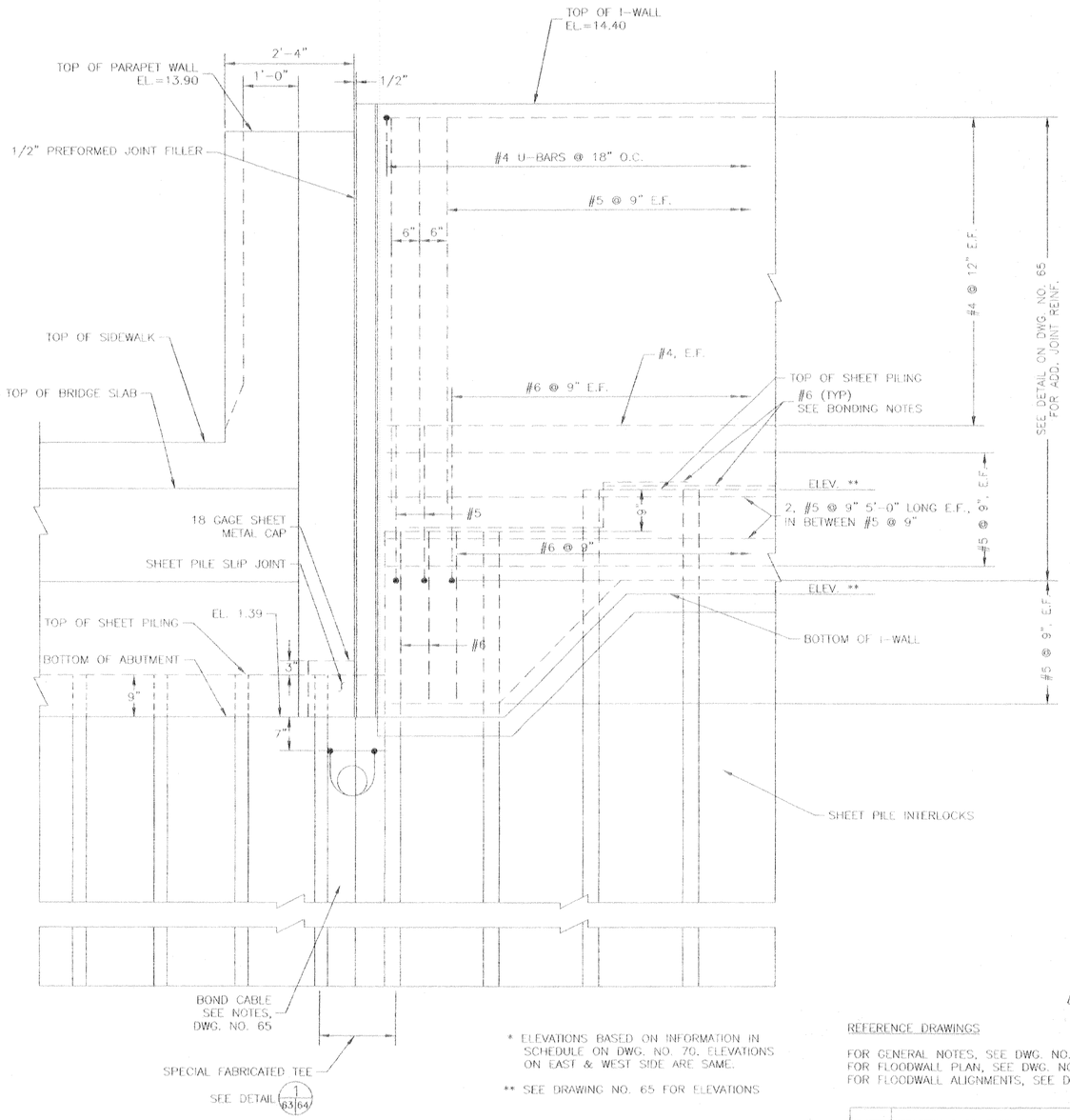

* ELEVATIONS BASED ON INFORMATION IN SCHEDULE ON DWG. NO. 70. ELEVATIONS ON EAST & WEST SIDE ARE SAME.

** SEE DRAWING NO. 65 FOR ELEVATIONS

FLOOD SIDE ELEVATION
REINFORCEMENT
I-WALL TO ABUTMENT
(SOUTHEAST CORNER SHOWN, OTHERS SIMILAR)
SCALE: 1" = 1'-0"

Safety is a Part of Your Contract

NOTES:

ALL ELEVATIONS ARE 1964 EPOCH, UNLESS OTHERWISE NOTED.

SCALE: 1" = 1'-0"

12" 0 1' 2' 3' 4' 5'

C-A-D

REFERENCE DRAWINGS

FOR GENERAL NOTES, SEE DWG. NO. 4
FOR FLOODWALL PLAN, SEE DWG. NO. 58
FOR FLOODWALL ALIGNMENTS, SEE DWG. NO. 60

SYMBOL	DESCRIPTION	DATE	APPROVED
	REVISIONS		

U.S. ARMY ENGINEER DISTRICT, NEW ORLEANS
CORPS OF ENGINEERS
NEW ORLEANS, LOUISIANA

BOARD OF LEVEE COMMISSIONERS
ORLEANS LEVEE DISTRICT
NEW ORLEANS, LOUISIANA

MEYER ENGINEERS, LTD. METAIRIE, LOUISIANA

LAKE PONTCHARTRAIN, LA. AND VICINITY
HIGH LEVEL PLAN

LONDON AVE. OUTFALL CANAL, PARALLEL PROTECTION FLOODPROOFING OF MIRABEAU AVE. & FILMORE AVE. BRIDGES
ORLEANS PARISH, LOUISIANA

FILMORE AVENUE SEALED BRIDGE JOINT DETAILS

DESIGNED BY: JCS	DATE: 3-12-01	PLOT SCALE: 1"=1'	PLOT DATE: 6-27-01
DRAWN BY: MJF			
CHECKED BY: JCS	CADD FILE: 956263		FILE NO. H-4-44674
SUBMITTED BY: MEYER ENGINEERS, LTD. DESIGN ENGINEER	SOLICITATION NO. DACW29-01-B-0092		DWG. 63 OF 97

VALUE ENGINEERING INCENTIVE CLAUSES
YOUR KEY TO HIGHER PROFITS

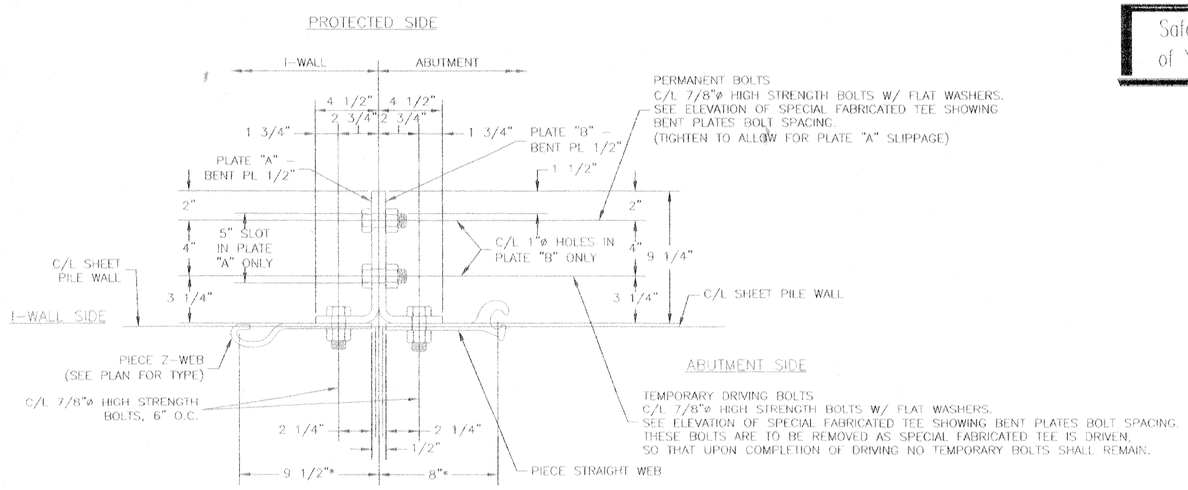

* DIMENSION VARIES WITH SHEET PILE MANUFACTURER. CONFIRM OR REVISE ON SHOP DRAWING SUBMITTAL AS REQ'D.

DETAIL 1/62 64

SPECIAL FABRICATED TEE
SCALE: 3" = 1'-0"

Safety is a Part of Your Contract

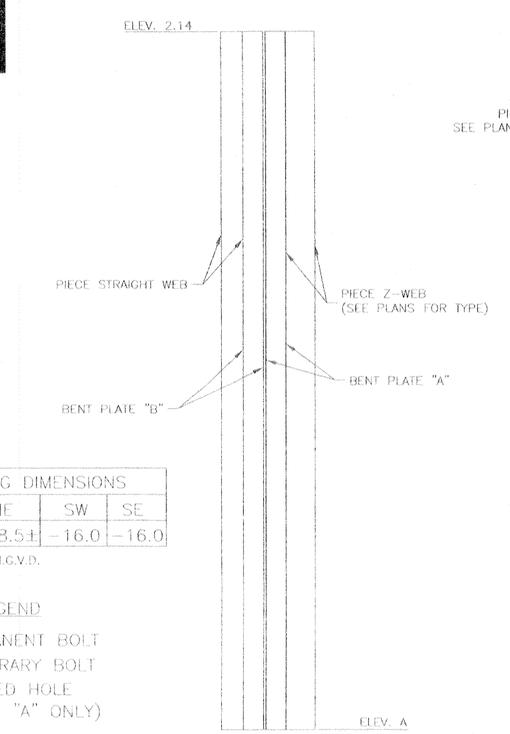

PROTECTED SIDE ELEVATION

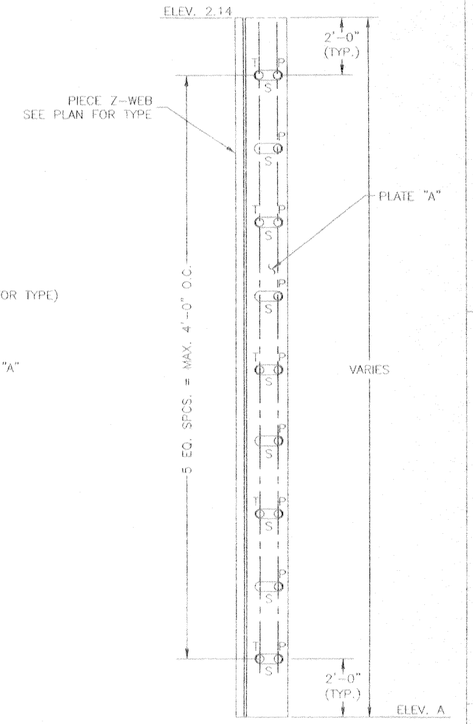

I-WALL SIDE ELEVATION

SHEETING DIMENSIONS				
	NW	NE	SW	SE
A*	-14.0	-28.5±	-16.0	-16.0

*ELEVATIONS IN N.G.V.D.

LEGEND

P=PERMANENT BOLT
T=TEMPORARY BOLT
S=SLOTTED HOLE (PLATE "A" ONLY)

NOTE:
TEMPORARY BOLTS ALTERNATE EACH SLOT

ELEVATION OF SPECIAL FABRICATED TEE SHOWING BENT PLATES BOLT SPACING
SCALE: HORIZ. 1" = 1'-0"
VERT. 1/2" = 1'-0"

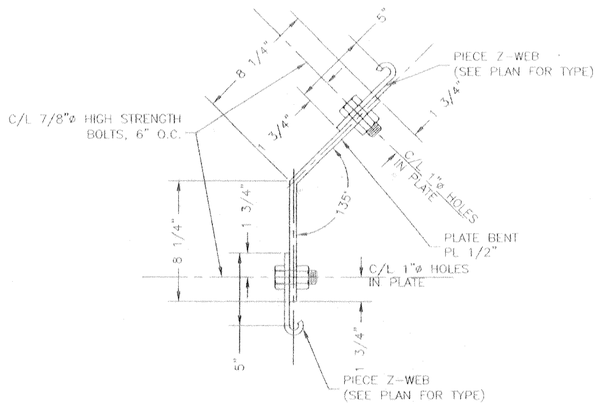

DETAIL 2/62 64

SPECIAL FABRICATED CORNER
(NORTHWEST, SOUTHWEST, SOUTHEAST CORNERS)
SCALE: 3" = 1'-0"

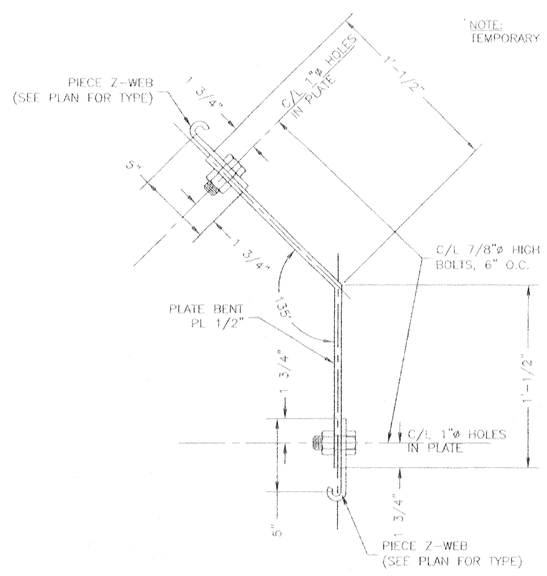

DETAIL 3/62 64

SPECIAL FABRICATED CORNER
(NORTHEAST CORNER)
SCALE: 3" = 1'-0"

SCALE: 1" = 1'- 0"
12" 0 1' 2' 3' 4' 5'

SCALE: 3" = 1' - 0"
12" 0 1'

SCALE: 1/2" = 1'- 0"
6" 0 5' 10'

REFERENCE DRAWINGS

FOR GENERAL NOTES, SEE DWG. NO. 4
FOR FLOODWALL PLAN, SEE DWG. NO. 58
FOR DETAILED FLOODWALL PLAN, SEE DWG. NO. 60
FOR FLOODWALL DETAILS, SEE DWG. NOS. 61 - 64

SYMBOL	DESCRIPTION	DATE	APPROVED
	REVISIONS		

U.S. ARMY ENGINEER DISTRICT, NEW ORLEANS
CORPS OF ENGINEERS
NEW ORLEANS, LOUISIANA

BOARD OF LEVEE COMMISSIONERS
ORLEANS LEVEE DISTRICT
NEW ORLEANS, LOUISIANA

MEYER ENGINEERS, LTD. METAIRIE, LOUISIANA
LAKE PONTCHARTRAIN, LA. AND VICINITY
HIGH LEVEL PLAN
LONDON AVE. OUTFALL CANAL, PARALLEL PROTECTION FLOODPROOFING OF MIRABEAU AVE. & FILMORE AVE. BRIDGES
ORLEANS PARISH, LOUISIANA

FILMORE AVENUE SEALED BRIDGE SHEET PILE DETAILS

DESIGNED BY: JCS	DATE: 3-12-01	PLOT SCALE: 1"=1'	PLOT DATE: 6-27-01
DRAWN BY: MJF			
CHECKED BY: JCS	CADD FILE: 936264		FILE NO. H-4-44674
SUBMITTED BY: MEYER ENGINEERS, LTD. DESIGN ENGINEER	SOLICITATION NO. DACW29-01-B-0092		DWG. 64 OF 97

VALUE ENGINEERING INCENTIVE CLAUSES YOUR KEY TO HIGHER PROFITS

Safety is a Part of Your Contract

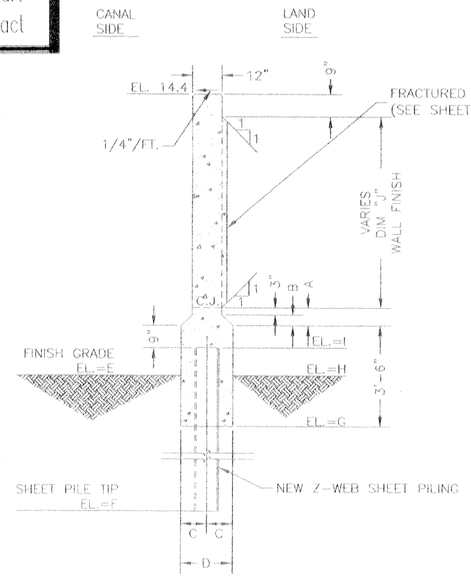

TYPICAL I-WALL DIMENSIONS

SCALE: 1"=1'-0"

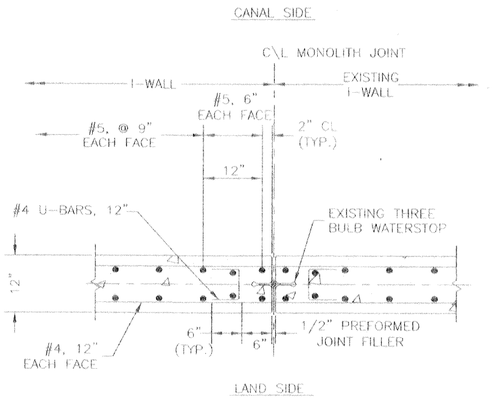

TYPICAL REINFORCEMENT AT MONOLITH JOINTS

SCALE: 1/2"=1'-0"

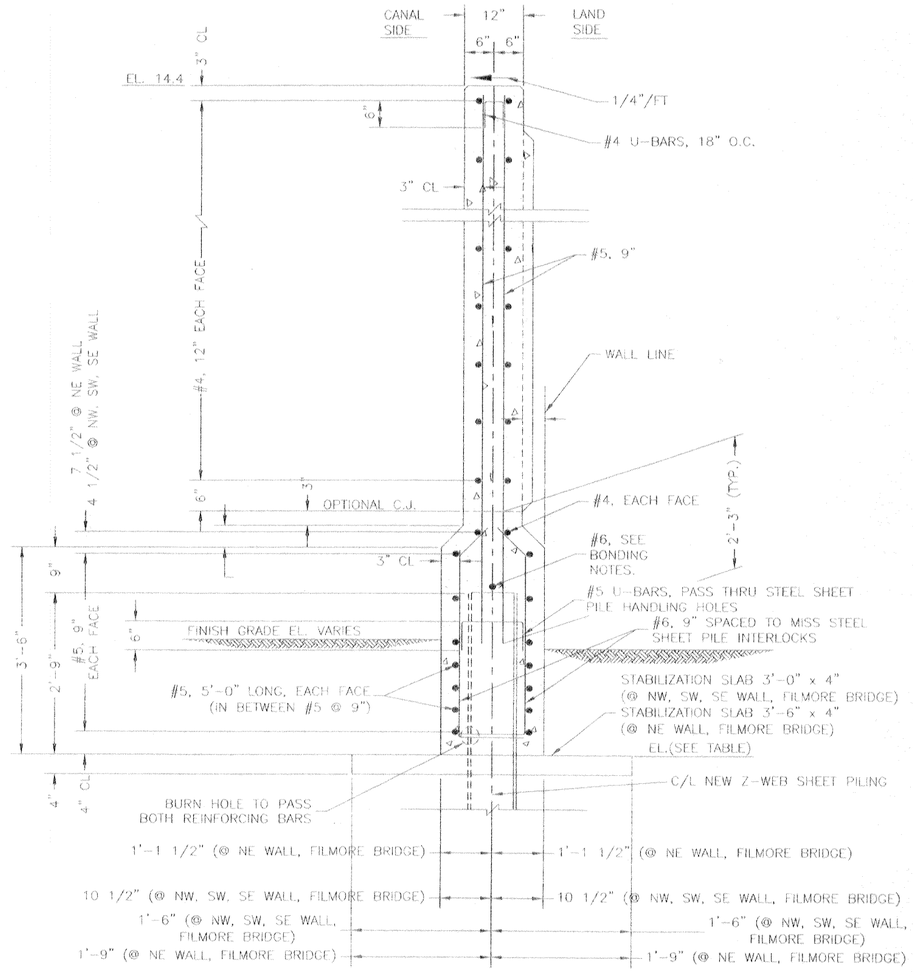

TYPICAL I-WALL SECTION

SCALE: 1/2"=1'-0"

CONCRETE I-WALL DIMENSIONS				
	FILMORE			
	NW	NE	SW	SE
A	7 1/2"	#10 1/2"	7 1/2"	7 1/2"
B	4 1/2"	7 1/2"	4 1/2"	4 1/2"
C	10 1/2"	1'-1 1/2"	10 1/2"	10 1/2"
D	1'-9"	2'-3"	1'-9"	1'-9"
E *	5.5	4.5	5.0	5.0
F *	-14.0	-28.5±	-16.0	-16.0
G *	3.5	2.5	3.0	3.0
H *	5.5	4.5	5.0	5.0
I *	6.25	5.25	5.75	5.75
J	6'-0 5/16"	6'-9 3/8"	6'-6 5/16"	6'-6 3/8"
TYPE OF SHEETING * *	TYPE "1"	AZ-18	TYPE "1"	TYPE "1"

* ELEVATIONS IN N.G.V.D.
** SEE SPECIFICATIONS FOR TYPE OF SHEET PILE

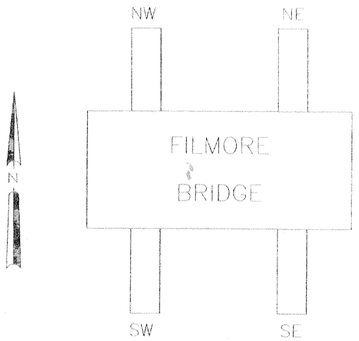

KEY PLAN

N.T.S.

BONDING NOTES:

#6 REINFORCING BAR TO BE WELDED TO THE TOP OF EACH STEEL SHEET PILE. #6 REINFORCING BAR SHALL NOT EXTEND ACROSS THE MONOLITH JOINT. INSTALL BOND CABLE AT ALL I-WALL JOINTS.

BOND CABLES SHALL HAVE AN 8" DIAMETER LOOP TO ALLOW FOR STRESSES. BOND CABLES SHALL BE WELDED AS SPECIFIED TO ADJACENT STEEL PILES 7" BELOW BOTTOM OF CONCRETE CAP FOR I-WALL JOINTS.

WELDED CONNECTIONS SHALL BE COATED WITH SPLICING EPOXY TO OBTAIN MOISTURE PROOF JOINT.
SEE SPECIFICATIONS.

#6 REINFORCING BARS SHALL BE WELDED TO THE LAST THREE SHEET PILINGS AT EACH END OF THE MONOLITH AS SHOWN FOR CONTINUITY.

SPLICING OF #6 REINFORCING BAR WILL NOT BE ALLOWED, EXCEPT AT THE ENDS OF I-WALL MONOLITHS AS SHOWN.

VALUE ENGINEERING INCENTIVE CLAUSES — YOUR KEY TO HIGHER PROFITS

SCALE: 1" = 1'

1/2' 0 1' 2'

SCALE: 1/2" = 1'

2' 1' 0 2' 4' 6' 8' 10'

SYMBOL	DESCRIPTION	DATE	APPROVED

REVISIONS

U.S. ARMY ENGINEER DISTRICT, NEW ORLEANS
CORPS OF ENGINEERS
NEW ORLEANS, LOUISIANA

BOARD OF LEVEE COMMISSIONERS
ORLEANS LEVEE DISTRICT
NEW ORLEANS, LOUISIANA

MEYER ENGINEERS, LTD. METAIRIE, LOUISIANA

LAKE PONTCHARTRAIN, LA. AND VICINITY
HIGH LEVEL PLAN

LONDON AVE. OUTFALL CANAL, PARALLEL PROTECTION FLOODPROOFING OF
MIRABEAU AVE. & FILMORE AVE. BRIDGES
ORLEANS PARISH, LOUISIANA

FILMORE AVENUE SEALED BRIDGE I-WALL REINFORCING & DETAILS

DESIGNED BY: JCS	DATE: 3-12-01	PLOT SCALE: 1"=2'	PLOT DATE: 6-27-01
DRAWN BY: BMS			
CHECKED BY: JCS	CADD FILE: 9362065		FILE NO. H-4-44674
SUBMITTED BY: MEYER ENGINEERS, LTD. DESIGN ENGINEER	SOLICITATION NO. DACW29-01-B-0052		DWG. 65 OF 97

Safety is a Part of Your Contract

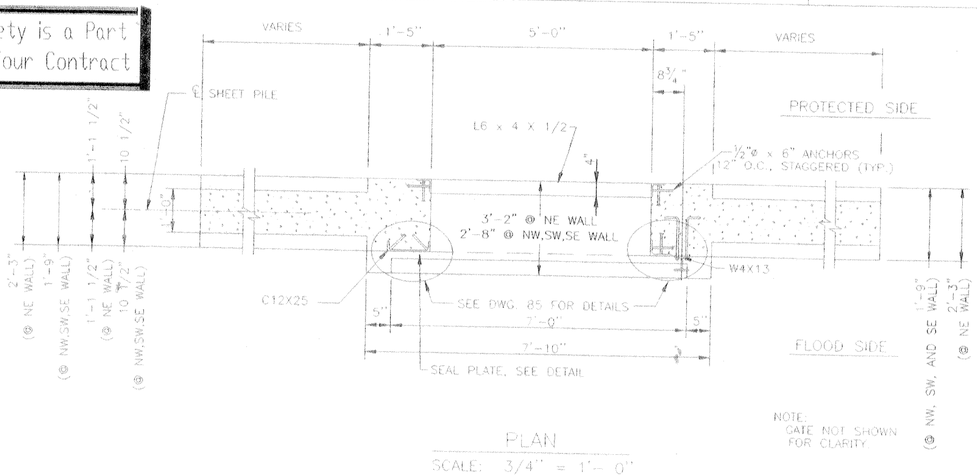

PLAN

SCALE: 3/4" = 1'- 0"

NOTE:
GATE NOT SHOWN FOR CLARITY.

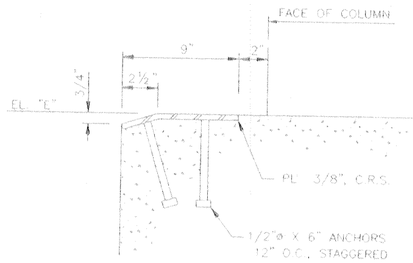

SEAL PLATE DETAIL

SCALE: 3" = 1'-0"

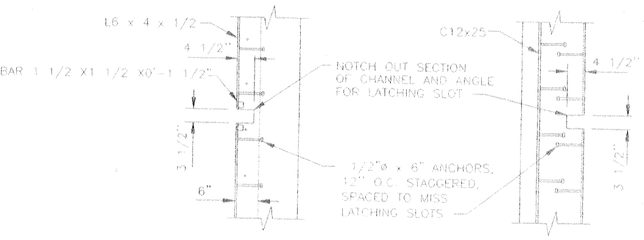

PROTECTED SIDE ELEVATION

FLOOD SIDE ELEVATION

TYPICAL DETAIL AT LATCHING SLOTS

SCALE: 3/4" = 1'- 0"

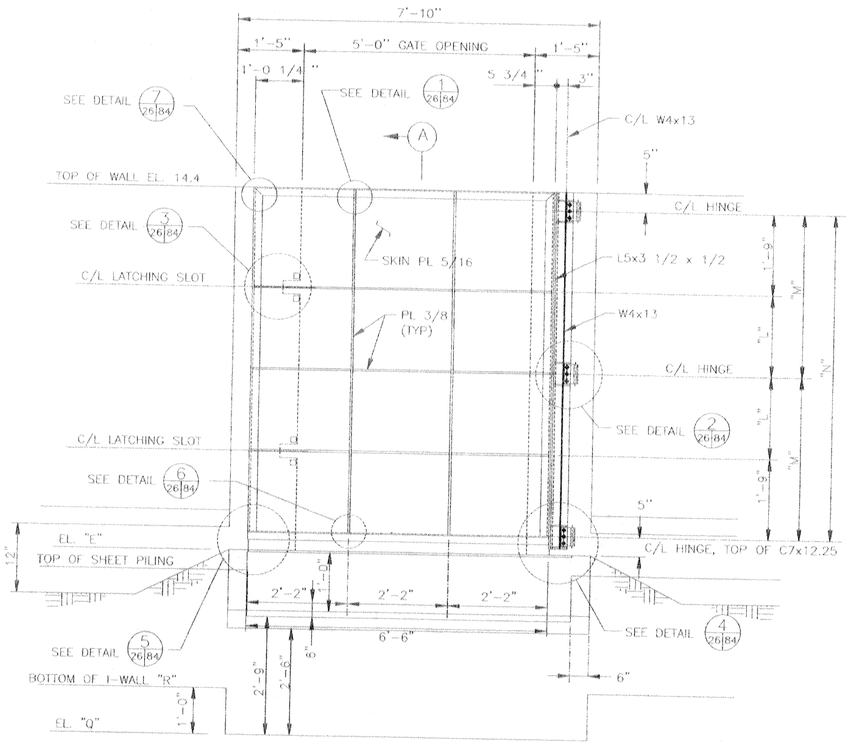

FLOOD SIDE ELEVATION

SCALE: 3/4" = 1'- 0"

GATES	SCHEDULE OF ELEVATIONS								
	E	F	L	M	N	O	P	Q	R
1(NW)	6.50	-14.0	1'-9 3/8"	3'-6 3/8"	7'-0 3/4"	3'-3 1/4"	1'-9 3/8"	2.5	3.5
2(NE)	5.50	-28.5±	2'-3 3/8"	4'-0 3/8"	8'-0 3/4"	4'-3 1/4"	2'-3 3/8"	1.5	2.5
3(SW)	6.00	-16.0	2'-0 3/8"	3'-9 3/8"	7'-6 3/4"	3'-9 1/4"	2'-0 3/8"	2.0	3.0
4(SE)	6.00	-16.0	2'-0 3/8"	3'-9 3/8"	7'-6 3/4"	3'-9 1/4"	2'-0 3/8"	2.0	3.0

SECTION (A)

SCALE: 3/4" = 1'- 0"

SCALE: 3/4" = 1'- 0"

12" 0 1' 2' 3' 4' 5'

SCALE: 3" = 1'- 0"

12" 0 1'

REFERENCE DRAWINGS:
FOR GENERAL NOTES, SEE DWG. 4.
FOR GATE MONOLITH REINFORCING, SEE DWG. 67.
FOR SEAL DETAILS, SEE DWG. 85.

SYMBOL	DESCRIPTION	DATE	APPROVED
	REVISIONS		

U.S. ARMY ENGINEER DISTRICT, NEW ORLEANS
CORPS OF ENGINEERS
NEW ORLEANS, LOUISIANA

BOARD OF LEVEE COMMISSIONERS
ORLEANS LEVEE DISTRICT
NEW ORLEANS, LOUISIANA

MEYER ENGINEERS, LTD. METAIRIE, LOUISIANA
LAKE PONTCHARTRAIN, LA. AND VICINITY
HIGH LEVEL PLAN

LONDON AVE. OUTFALL CANAL, PARALLEL PROTECTION FLOODPROOFING OF MIRABEAU AVE. & FILMORE AVE. BRIDGES
ORLEANS PARISH, LOUISIANA

FILMORE AVENUE SEALED BRIDGE PEDESTRIAN GATE DETAILS-1

DESIGNED BY: JCS	DATE: 3-12-01	PLOT SCALE: 1"=1'	PLOT DATE: 6-27-01
DRAWN BY: MJF			
CHECKED BY: JCS	CADD FILE: 925268		FILE NO. H-4-44674
SUBMITTED BY: MEYER ENGINEERS, LTD. DESIGN ENGINEER	SOLICITATION NO. DACW29-01-B-0092		DWG. 66 OF 97

VALUE ENGINEERING INCENTIVE CLAUSES YOUR KEY TO HIGHER PROFITS

C-A-D

MRSID:gen1:05:Plan1:1.dgn

Safety is a Part of Your Contract

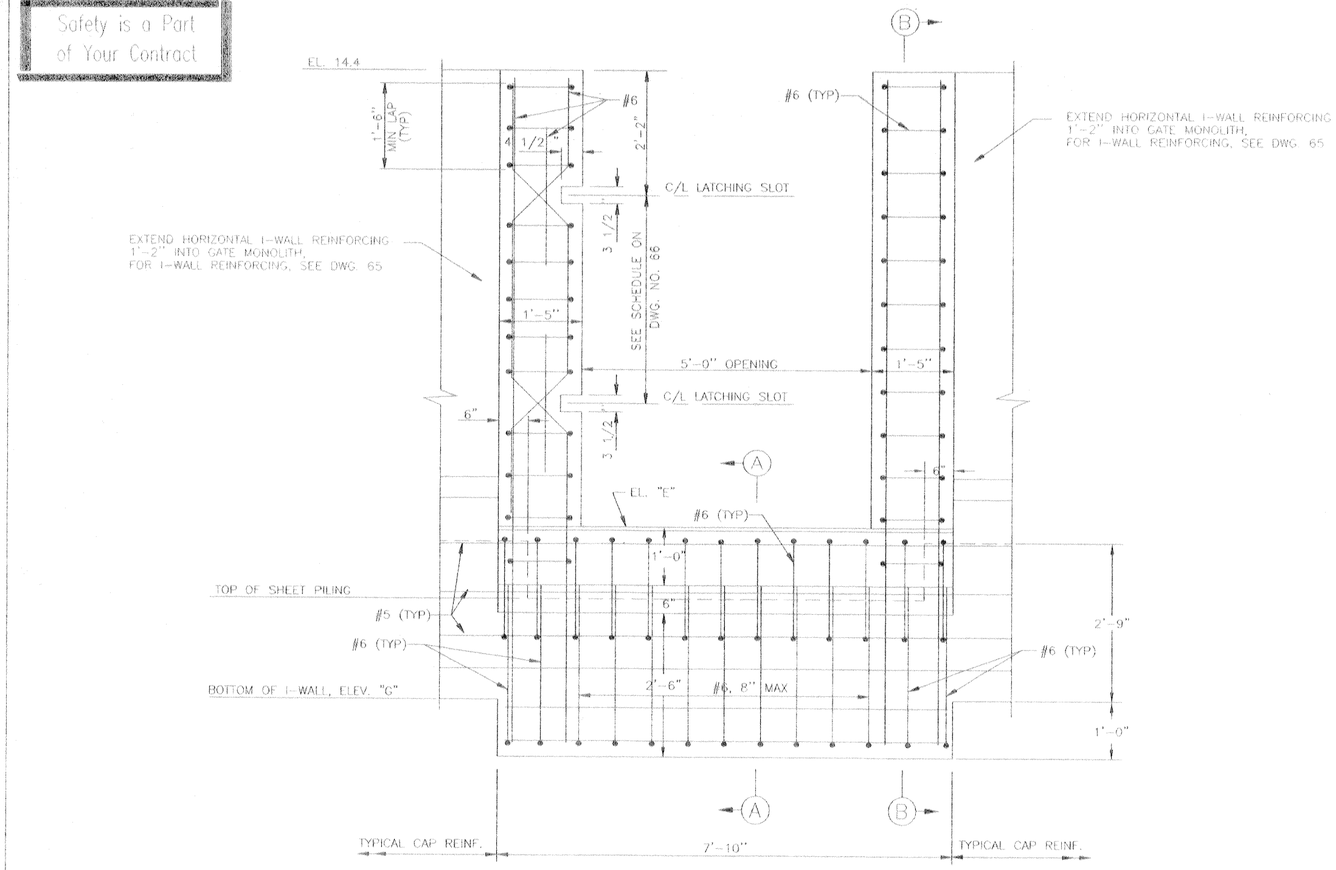

FLOOD SIDE ELEVATION

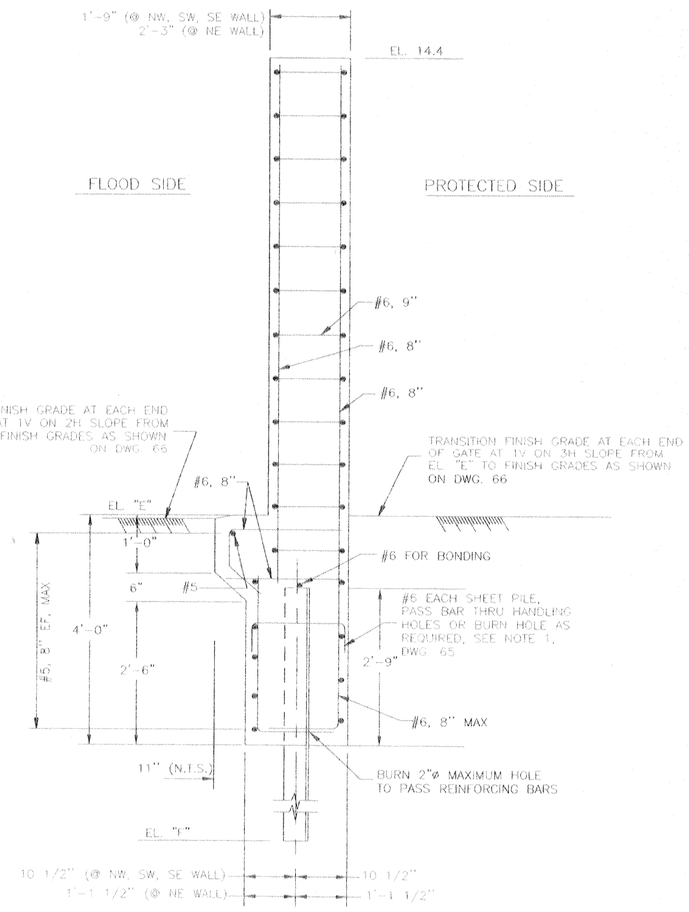

SECTION (B)

SCALE: 1" = 1'- 0"

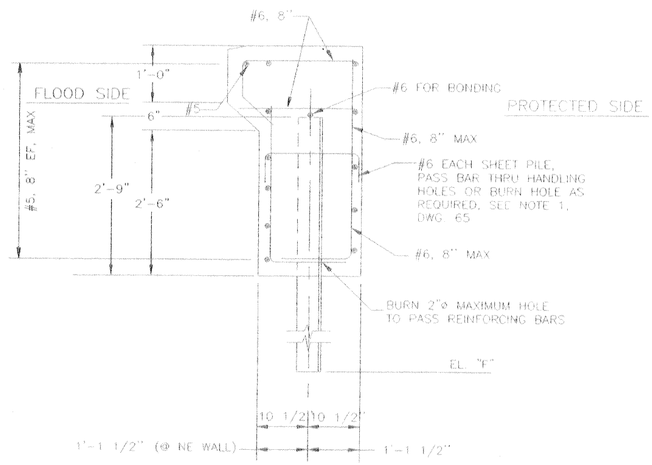

SECTION (A)

SCALE: 1" = 1'- 0"

GATES	SCHEDULE OF ELEVATIONS		
	E	F	G
1(NW)	6.5	-14.0	3.5
2(NE)	5.5	-28.5	2.5
3(SW)	6.0	-16.0	3.0
4(SE)	6.0	-16.0	3.0

SCALE: 1" = 1'- 0"

12" 0 1' 2' 3' 4' 5'

NOTES:
FOR GENERAL NOTES, SEE DWG. 4.
FOR I-WALL REINFORCING, SEE DWG. 65.
FOR GATE MONOLITH MASONRY, SEE DWG. 66.
FOR GATE LATCHING DETAILS, SEE DWG. 86.

SYMBOL	DESCRIPTION	DATE	APPROVED
	REVISIONS		

U.S. ARMY ENGINEER DISTRICT, NEW ORLEANS
CORPS OF ENGINEERS
NEW ORLEANS, LOUISIANA

BOARD OF LEVEE COMMISSIONERS
ORLEANS LEVEE DISTRICT
NEW ORLEANS, LOUISIANA

MEYER ENGINEERS, LTD. METAIRIE, LOUISIANA

LAKE PONTCHARTRAIN, LA. AND VICINITY
HIGH LEVEL PLAN

LONDON AVE. OUTFALL CANAL, PARALLEL PROTECTION FLOODPROOFING OF MIRABEAU AVE. & FILMORE AVE. BRIDGES
ORLEANS PARISH, LOUISIANA

FILMORE AVENUE SEALED BRIDGE PEDESTRIAN GATE DETAILS - 2

DESIGNED BY: JCS	DATE: 3-12-01	PLOT SCALE: 1"=1'	PLOT DATE: 6-27-01
DRAWN BY: MJF			
CHECKED BY: JCS	CADD FILE: 9362867		FILE NO. H-4-44674
SUBMITTED BY: MEYER ENGINEERS, LTD. DESIGN ENGINEER	SOLICITATION NO.: DACW29-01-B-0092		DWG: 67 OF 97

YOUR KEY TO HIGHER PROFITS

Safety is a Part of Your Contract

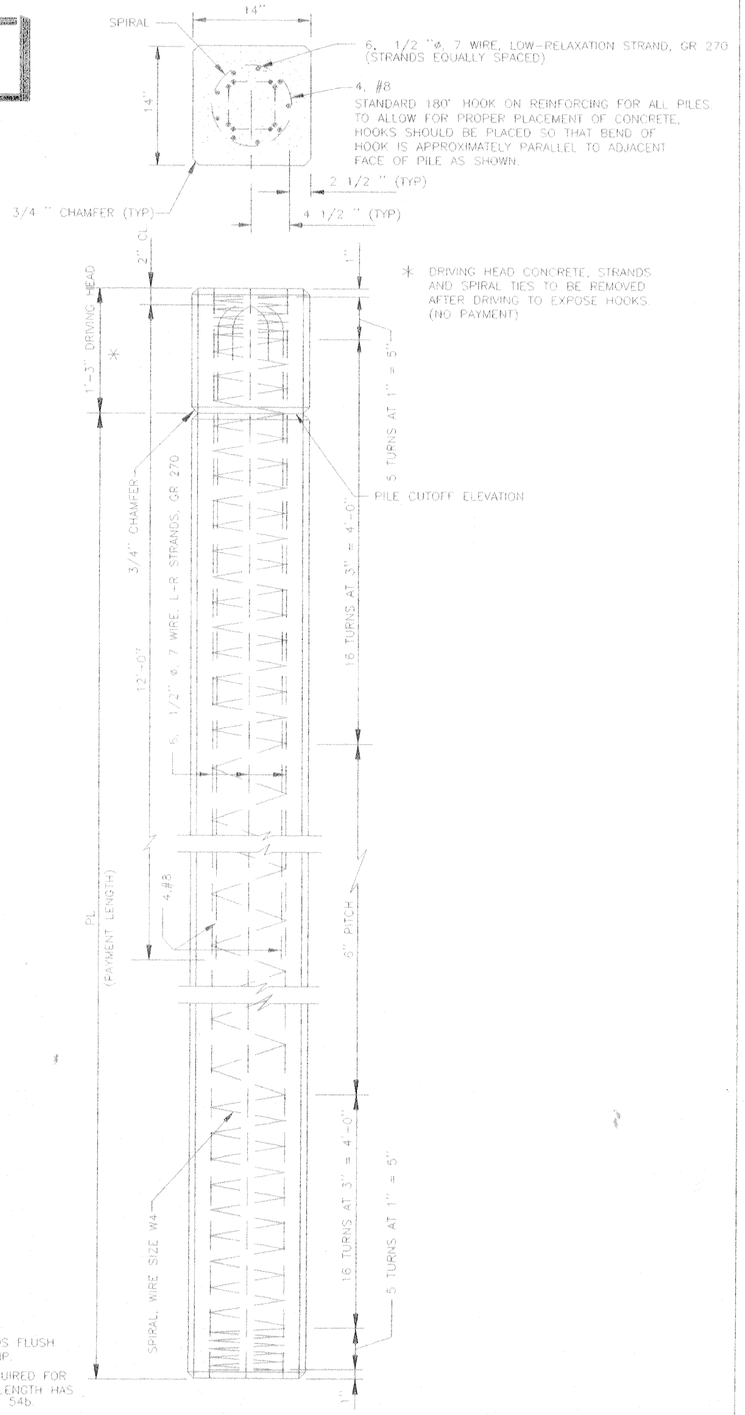

NOTE:
1. GRIND PRESTRESSED STRANDS FLUSH WITH PILE HEAD AND PILE TIP.
2. PILE TEST WILL NOT BE REQUIRED FOR 14"x14" PCCP. REQ'D PILE LENGTH HAS BEEN SHOWN ON SHEET NO. 54b.

14" X 14"
PRESTRESSED PRECAST
CONCRETE PILE
50" WATERMAIN CROSSING'S PILE BENTS

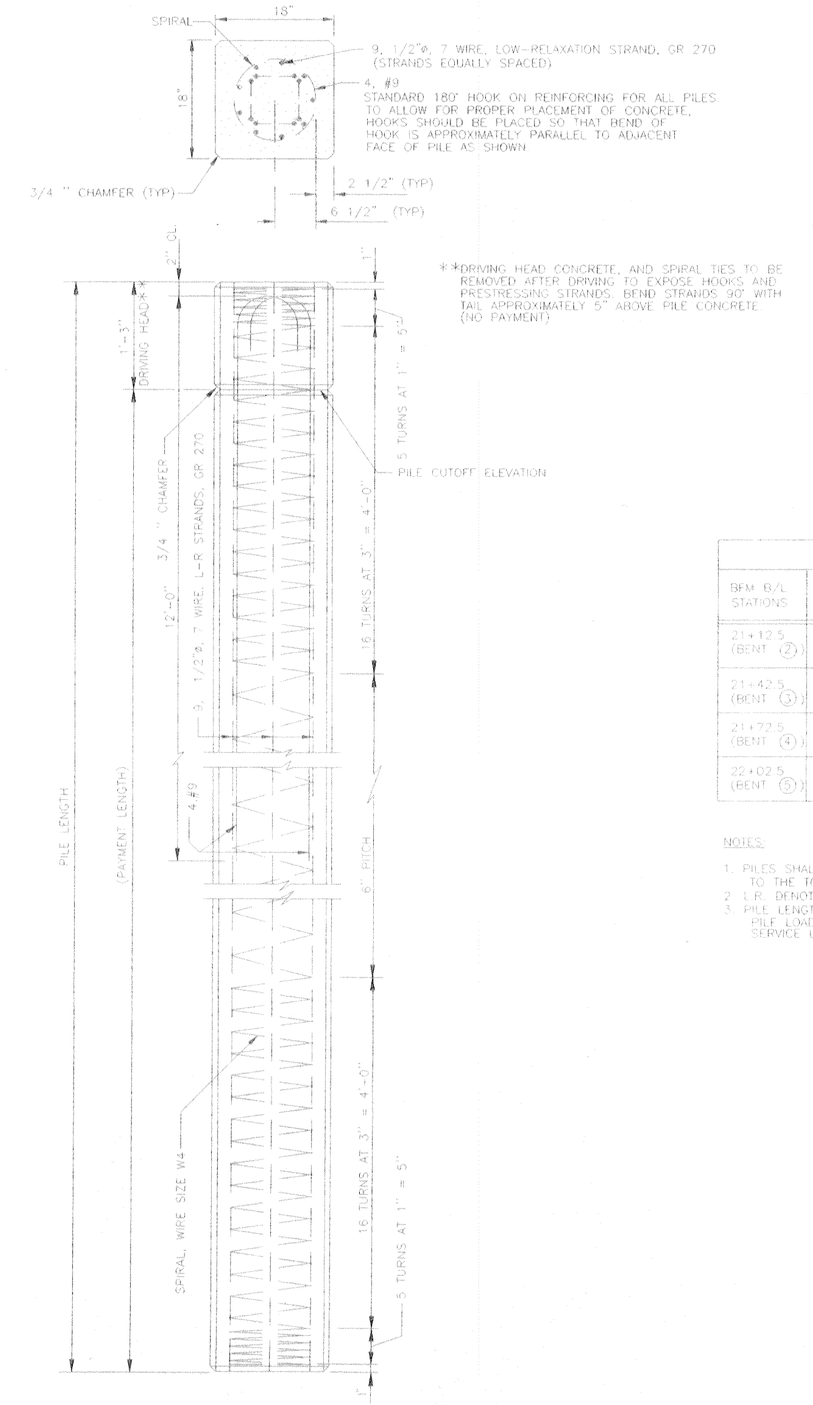

NOTE:
GRIND PRESTRESSED STRANDS FLUSH WITH PILE HEAD AND PILE TIP.

18" X 18"
PRESTRESSED PRECAST
CONCRETE PILE
FOR BRIDGE CONSTRUCTION

1 POINT PICKUP (L≤ 59') 14" X 14" PILE
NOTE: PICKUP POINTS TO BE PLAINLY MARKED ON PILES

2 POINT PICKUP (L< 84') 14" X 14" PILE

2 POINT PICKUP (L≤ 90') 18" X 18" PILE
NOTE: PICKUP POINTS TO BE PLAINLY MARKED ON PILES

PILE SCHEDULE

BEM B/L STATIONS	PILE SIZE	NUMBER OF PILES	PILE LENGTH	PILE BATTER
21+12.5 (BENT ②)	18" x 18"	6	81'-6"	VERTICAL
		2	81'-6"	12V ON 1H
21+42.5 (BENT ③)	18" x 18"	6	81'-6"	VERTICAL
		2	81'-6"	12V ON 1H
21+72.5 (BENT ④)	18" x 18"	6	81'-6"	VERTICAL
		2	81'-6"	12V ON 1H
22+02.5 (BENT ⑤)	18" x 18"	6	81'-6"	VERTICAL
		2	81'-6"	12V ON 1H

NOTES:
1. PILES SHALL BE DRIVEN TO ACHIEVE REQUIRED EMBEDMENT IN PILE CAPS AND TO THE TOLERANCES SPECIFIED IN SECTION 02365 OF THE SPECIFICATIONS.
2. L.R. DENOTES LOW RELAXATION.
3. PILE LENGTH ARE SHOWN FOR ESTIMATING PURPOSES (WITH FACTOR OF SAFETY=2) PILE LOAD TEST SHALL BE PERFORMED PRIOR TO ORDERING PILES. SERVICE LOAD = 30 TONS

REFERENCE DRAWINGS

FOR GENERAL NOTES, SEE DWG. NO. 4
FOR PLAN/PROFILE, SEE DWG. NO. 47
FOR BENT DETAILS, SEE DWG. NO. 73

SCALE: 1 1/2 " = 1' - 0"

SYMBOL	DESCRIPTION	DATE	APPROVED
	REVISIONS		

U.S. ARMY ENGINEER DISTRICT, NEW ORLEANS
CORPS OF ENGINEERS
NEW ORLEANS, LOUISIANA

BOARD OF LEVEE COMMISSIONERS
ORLEANS LEVEE DISTRICT
NEW ORLEANS, LOUISIANA
MEYER ENGINEERS, LTD. METAIRIE, LOUISIANA
LAKE PONTCHARTRAIN, LA. AND VICINITY
HIGH LEVEL PLAN
LONDON AVE. OUTFALL CANAL, PARALLEL PROTECTION FLOODPROOFING OF MIRABEAU AVE. & FILMORE AVE. BRIDGES
ORLEANS PARISH, LOUISIANA

FILMORE AVENUE SEALED BRIDGE PRESTRESSED CONCRETE PILES

DESIGNED BY: JCS	DATE: 3-12-01	PLOT SCALE: 1"=1'	PLOT DATE: 6-27-01
DRAWN BY: MJF			
CHECKED BY: JCS	CADD FILE: 9362B8		FILE NO. H-4-44674
SUBMITTED BY: MEYER ENGINEERS, LTD. DESIGN ENGINEER	SOLICITATION NO. DACW29-01-B-0092		DWG. 68 OF 97

VALUE ENGINEERING INCENTIVE CLAUSES — YOUR KEY TO HIGHER PROFITS

C-A-D

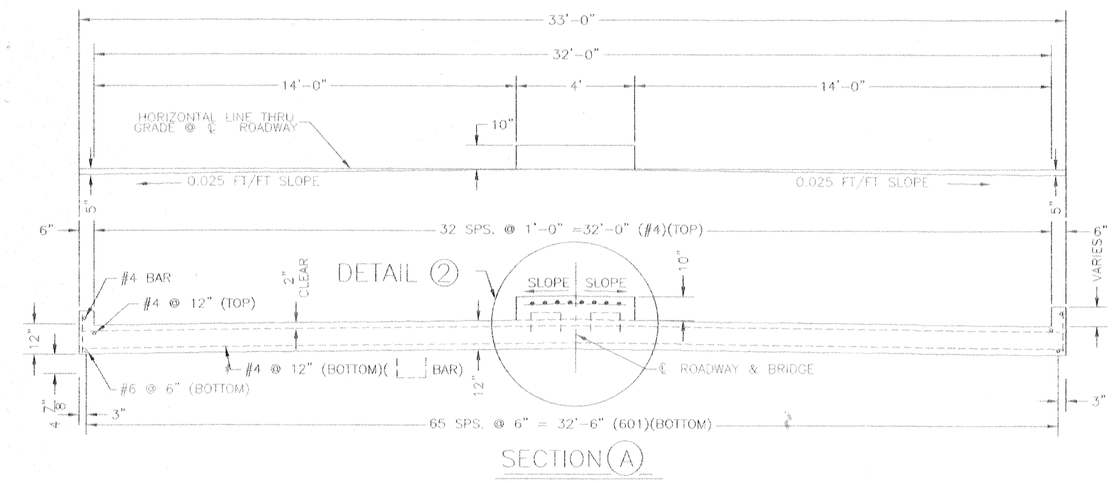

SECTION (A)

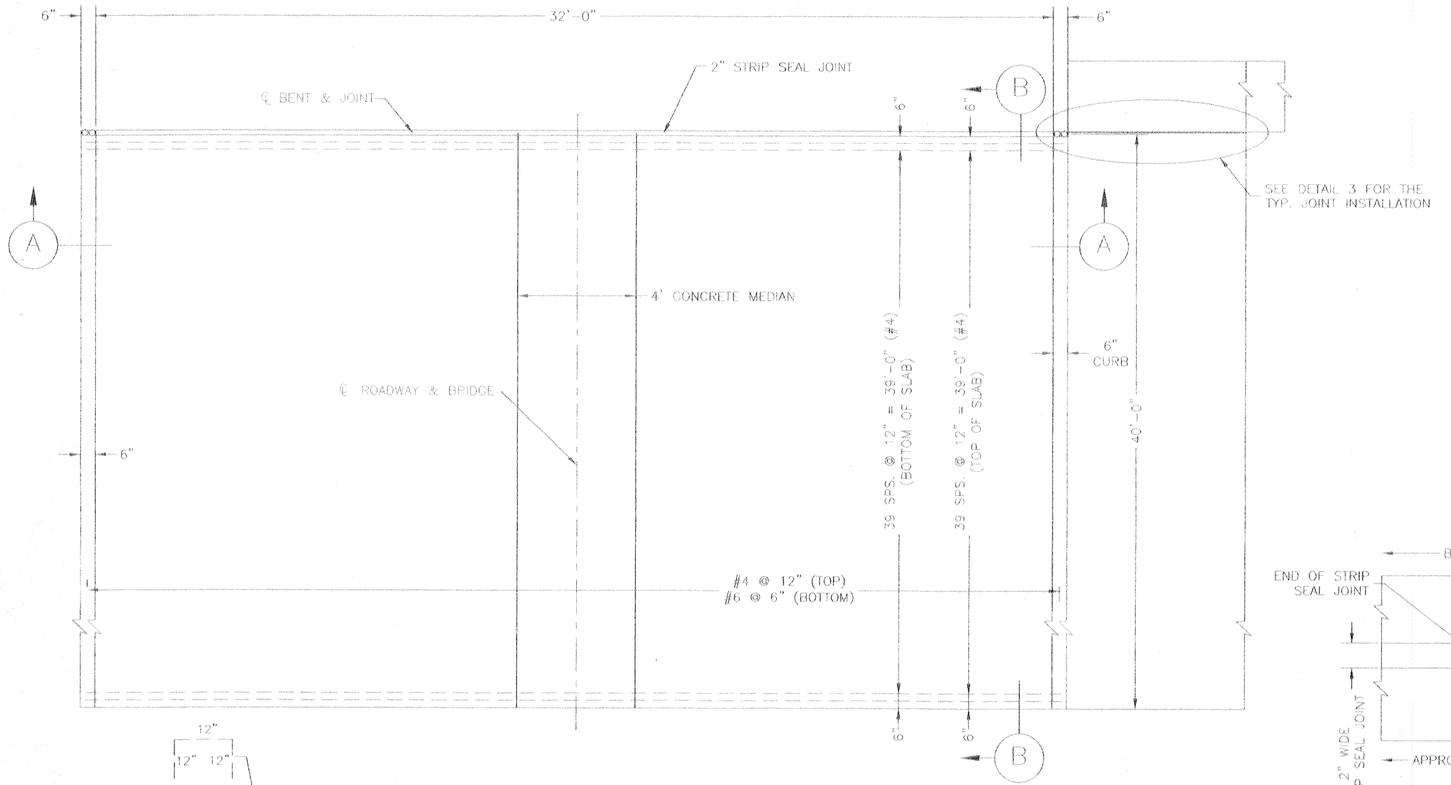

PLAN

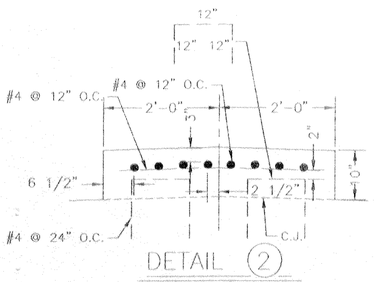

DETAIL (2)
SCALE: 1"=1'-0"

Safety is a Part of Your Contract

APPROACH SLAB NOTES:

1. THE APPROACH SLAB SHALL BE CONSTRUCTED IN ACCORDANCE WITH THESE DRAWINGS AND SPECIFICATION SECTION 02550 "APPROACH SLAB"
2. STRUCTURAL CONCRETE: ALL CONCRETE SHALL HAVE A 3/4" CHAMFER UNLESS OTHERWISE NOTED.
3. REINFORCING STEEL: ALL REINFORCING STEEL SHALL BE GRADE 60. DIMENSIONS RELATING TO FABRICATION ARE OUT-TO-OUT OF BARS, UNLESS OTHERWISE NOTED. DIMENSIONS RELATING TO SPACING ARE TO BAR CENTERS, UNLESS OTHERWISE NOTED.

DETAIL (1)

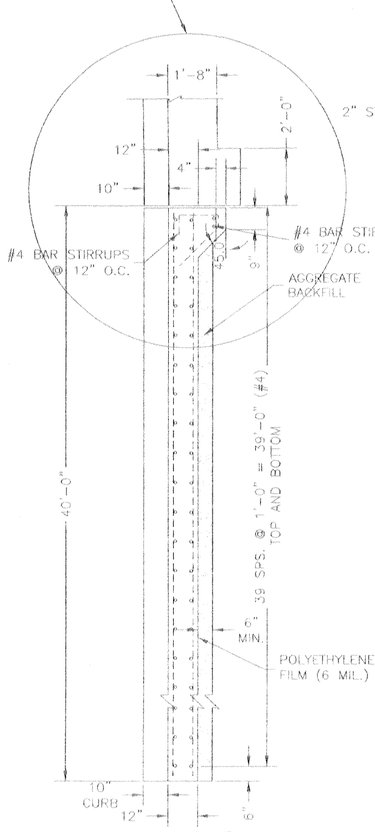

SECTION (B)
SCALE: 1"=1'-0"

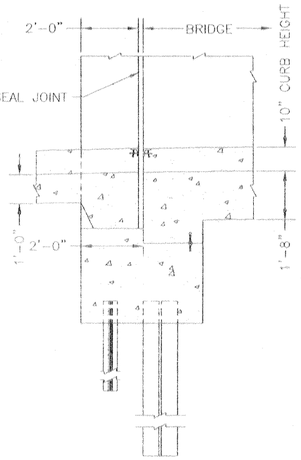

DETAIL (1)
SCALE: 1"=1'-0"

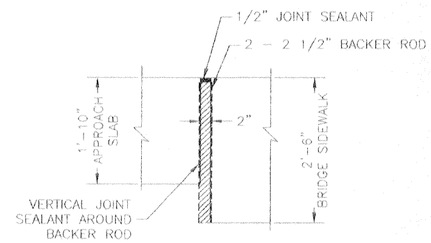

SECTION (C)
SCALE: 1"=1'-0"

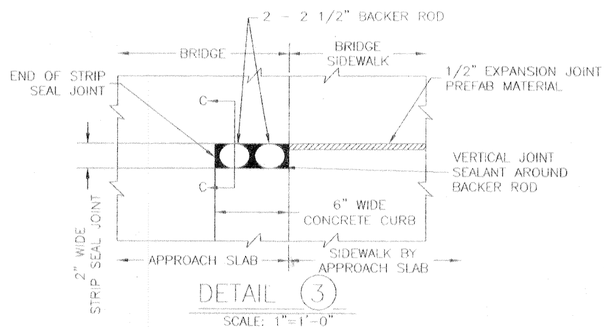

DETAIL (3)
SCALE: 1"=1'-0"

C•A•D

SECTION ALONG ℄ ROADWAY
(FOR PORTLAND CEMENT CONCRETE PAVEMENT)
NOTE: CURB SHOWN TO BE POURED MONOLITHIC WITH SLAB (NO REINFORCING STEEL)
10" CONC. MEDIAN NOT SHOWN FOR CLARITY

TALOS INCENTIVE CLAUSES IN ENGINEERING — YOUR KEY TO HIGHER PROFITS

SCALE: 1/2" = 1'-0"

2' 1' 0 2' 4' 6' 8' 10'

SYMBOL	DESCRIPTION	DATE	APPROVED
REVISIONS			

U.S. ARMY ENGINEER DISTRICT, NEW ORLEANS
CORPS OF ENGINEERS
NEW ORLEANS, LOUISIANA

BOARD OF LEVEE COMMISSIONERS
ORLEANS LEVEE DISTRICT
NEW ORLEANS, LOUISIANA

MEYER ENGINEERS, LTD, METAIRIE, LOUISIANA
LAKE PONTCHARTRAIN, LA AND VICINITY

HIGH LEVEL PLAN

LONDON AVE. OUTFALL CANAL, PARALLEL PROTECTION FLOODPROOFING OF MIRABEAU AVE. & FILMORE AVE. BRIDGES
ORLEANS PARISH, LOUISIANA

FILMORE AVENUE SEALED BRIDGE APPROACH SLAB

DESIGNED BY: JCS	DATE: 3-12-01	PLOT SCALE: 1"=2'	PLOT DATE: 6-27-01
DRAWN BY: MJF			
CHECKED BY: JCS	CADD FILE: 9362060		FILE NO. H-4-44674
SUBMITTED BY: MEYER ENGINEERS, LTD. DESIGN ENGINEER	SOLICITATION NO. DACW29-01-B-0092		DWG. 69 OF 97

Safety is a Part of Your Contract

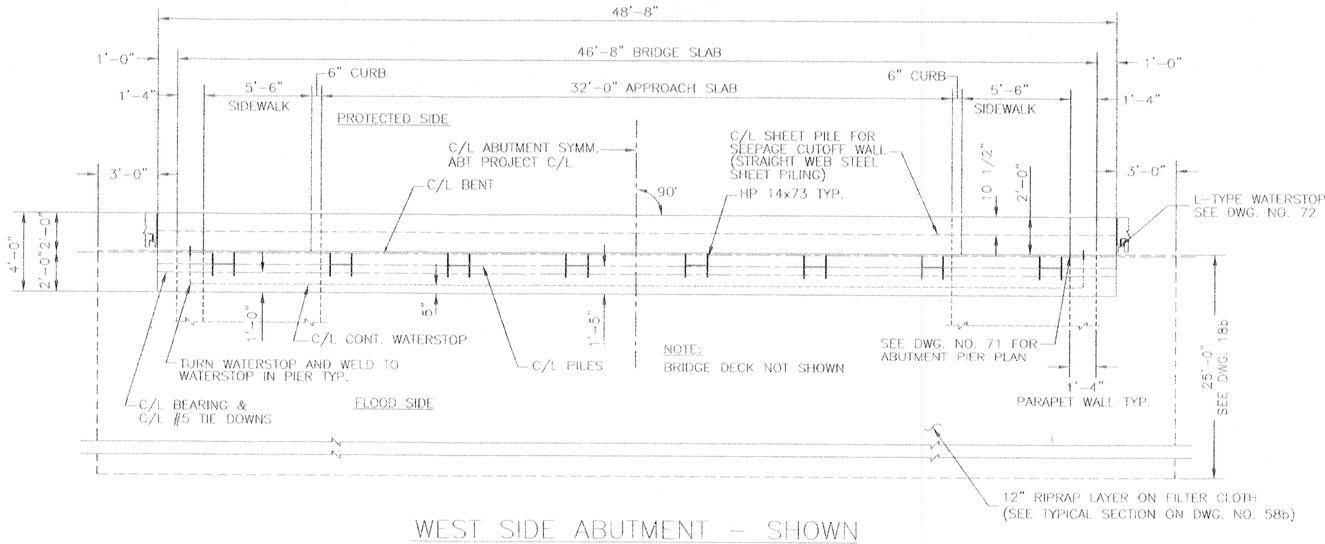

WEST SIDE ABUTMENT – SHOWN
EAST SIDE ABUTMENT – OPPOSITE HAND BY C/L CANAL

PLAN

SCALE: 1"=3'

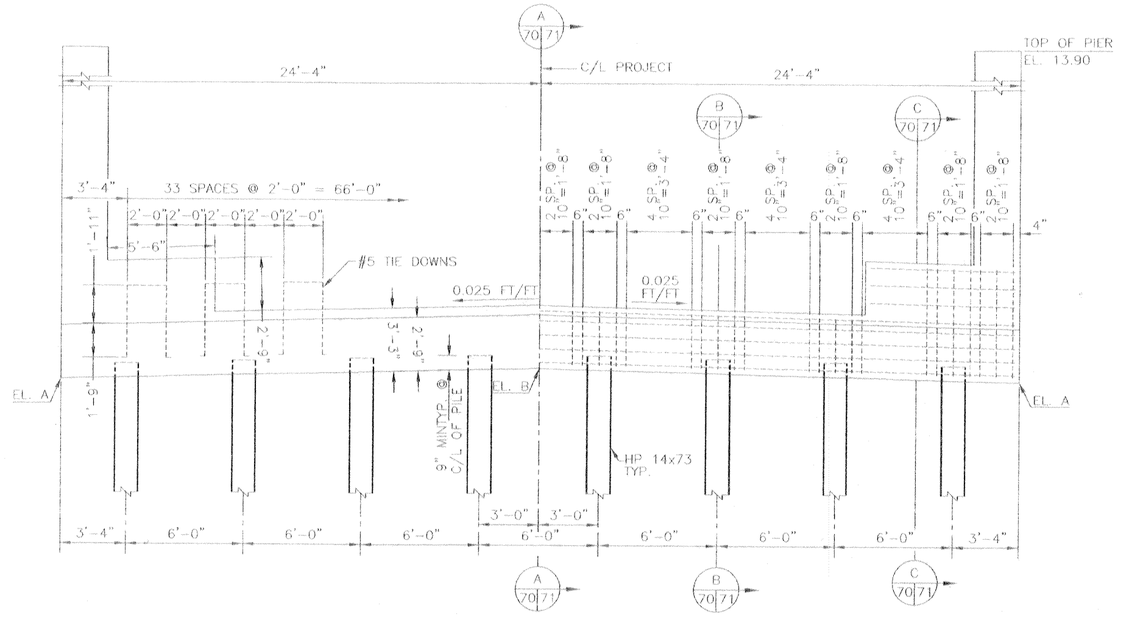

ELEVATION

SCALE: 1"=3'

ABUTMENT	C/L BRG. BFM B/L STATION	ELEV. A	ELEV. B
WEST ①	20+82.5	1.39	1.99
EAST ⑥	22+32.5	1.39	1.99

REFERENCE DRAWINGS
FOR GENERAL NOTES, SEE DWG. NO. 4
FOR BENT LOCATIONS, SEE DWG. NO. 47
FOR STRUCTURE PLAN AND ELEVATION, SEE DWG. NO. 57

NOTE:
BRIDGE DECK AND SHEET PILE NOT SHOWN IN ELEVATION.

PILE LENGTH = ±80.50 FT.
REQ'D PILE LENGTH SHOWN ARE FOR ESTIMATING PURPOSE (WITH FACTOR OF SAFETY=2.00). A PILE TEST SHALL BE PERFORMED PRIOR TO ORDERING PILES.

SERVICE LOAD = 30 TONS

HP 14x73 SHEET PILE TIP ELEV. = (±)-78.00

SCALE: 1" = 3'-0"

2' 0 2' 4' 6' 8' 10' 12'

VALUE ENGINEERING INCENTIVE CLAUSES — YOUR KEY TO HIGHER PROFITS

SYMBOL	DESCRIPTION	DATE	APPROVED

REVISIONS

U.S. ARMY ENGINEER DISTRICT, NEW ORLEANS
CORPS OF ENGINEERS
NEW ORLEANS, LOUISIANA

BOARD OF LEVEE COMMISSIONERS
ORLEANS LEVEE DISTRICT
NEW ORLEANS, LOUISIANA

MEYER ENGINEERS, LTD. METAIRIE, LOUISIANA

LAKE PONTCHARTRAIN, LA. AND VICINITY
HIGH LEVEL PLAN
LONDON AVE. OUTFALL CANAL, PARALLEL PROTECTION FLOODPROOFING OF MIRABEAU AVE. & FILMORE AVE. BRIDGES
ORLEANS PARISH, LOUISIANA

FILMORE AVENUE SEALED BRIDGE
ABUTMENT PLAN AND ELEVATIONS

DESIGNED BY: JCS	DATE: 3-12-01	PLOT SCALE: 1"=3'	PLOT DATE: 6-27-01
DRAWN BY: BMS			
CHECKED BY: JCS	CADD FILE: 9362B70		FILE NO. H-4-44674
SUBMITTED BY: MEYER ENGINEERS, LTD. DESIGN ENGINEER	SOLICITATION NO. DACW29-01-B-0092		DWG. 70 OF 97

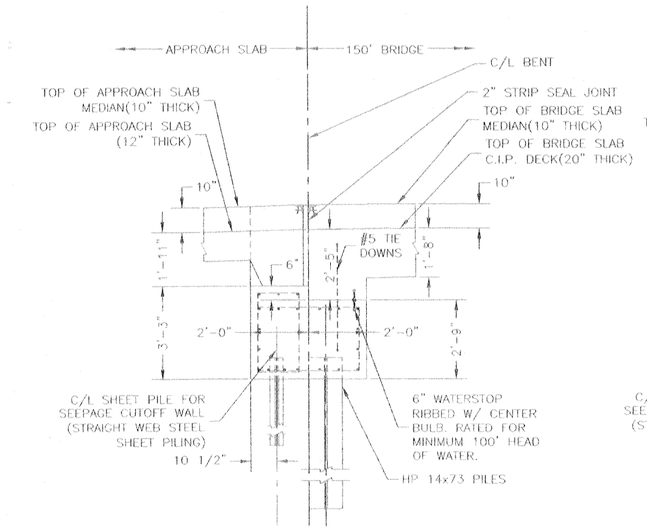

SECTION A (70|71)
SCALE: 1/2"=1'-0"

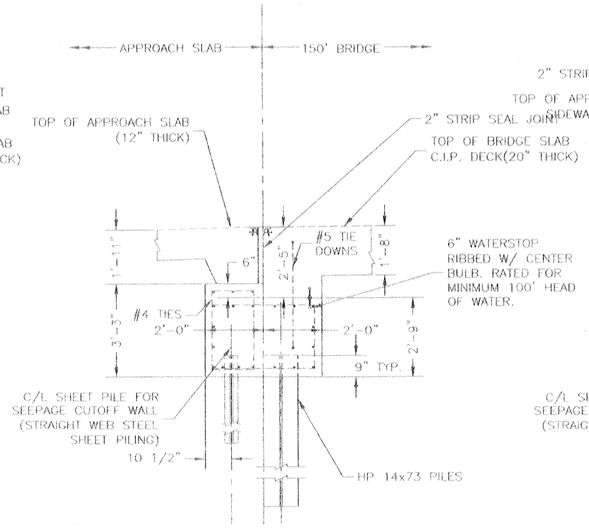

SECTION B (70|71)
SCALE: 1/2"=1'-0"

NOTE:
FOR SPACING OF SETS OF STIRRUPS, SEE ELEVATION, DWG. 70.

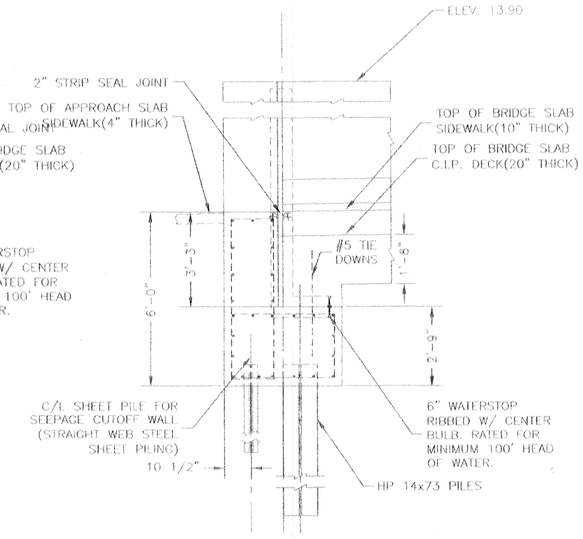

SECTION C (70|71)
SCALE: 1/2"=1'-0"

NOTES:
1. UPPER 10 FEET OF HP 14x73 TO RECIEVE COATING.

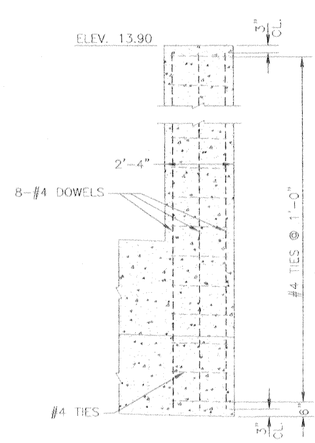

SECTION D
SCALE: 1/2"=1'-0"

Safety is a Part of Your Contract

FOR PIER REINF., SEE ABUTMENT PIER SECTION.

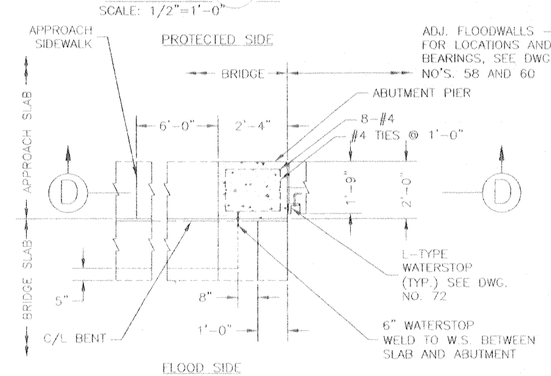

TYPICAL ABUTMENT PIER SECTION
SCALE: 1/2"=1'-0"

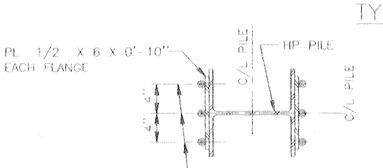

SECTION E
SCALE: 1 1/2"=1'

SCALE: 1/2" = 1'- 0"
24" 12" 0 2' 4' 6' 8' 10'

SCALE: 1 1/2 " = 1' - 0"
12" 0 1' 2' 4' 8'

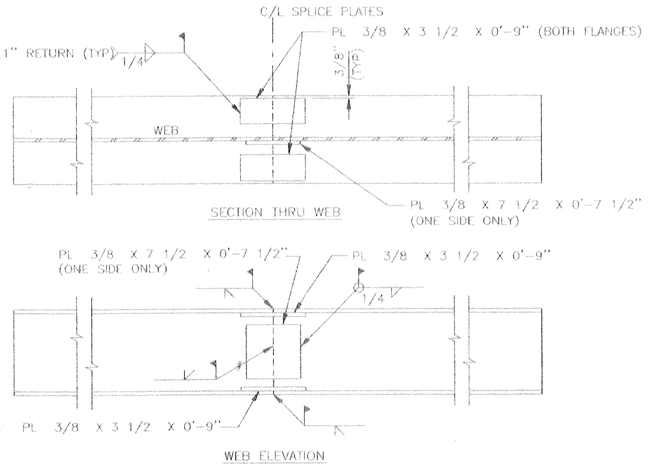

HP PILE SPLICE
SCALE: 1/2"=1'-0"

NOTES:
1. GROOVE WELDS SHALL BE GROUND SMOOTH FOR FLUSH FIT OF OVERLAPPING SPLICE PLATES AS REQUIRED.
2. PILES SHALL BE SPLICED AFTER DRIVING EACH PROCEEDING PORTION OF THE POLE.
3. NO MORE THAN TWO SPLICES PER PILE ARE ALLOWABLE.
4. THE MINIMUM DISTANCE BELOW THE PILE CUTOFF ELEVATION TO THE FIRST PILE SPLICE SHALL BE 30'-0".
5. THE FOUR FLANGE PLATES SHALL BE IN PLACE BEFORE THE GROOVE WELDS ARE MADE.

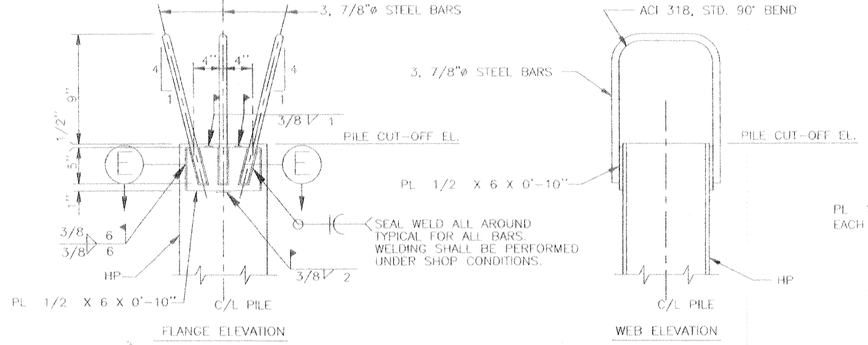

NOTE: PROVIDE TENSION PILE CONNECTIONS TO ALL HP PILES.

TENSION PILE CONNECTION DETAIL
SCALE: 1"=1 1/2"

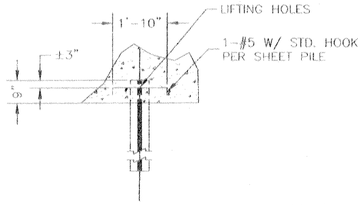

SHEET PILE ANCHOR DETAIL
SCALE: 1/2"=1'-0"

REFERENCE DRAWINGS:
FOR GENERAL NOTES, SEE DWG. NO. 4
FOR STRUCTURE PLAN AND ELEVATION, SEE DWG. NO. 57.

C-A-D

SYMBOL	DESCRIPTION	DATE	APPROVED
REVISIONS			

U.S. ARMY ENGINEER DISTRICT, NEW ORLEANS
CORPS OF ENGINEERS
NEW ORLEANS, LOUISIANA

BOARD OF LEVEE COMMISSIONERS
ORLEANS LEVEE DISTRICT
NEW ORLEANS, LOUISIANA

MEYER ENGINEERS, LTD. METAIRIE, LOUISIANA
LAKE PONTCHARTRAIN, LA. AND VICINITY
HIGH LEVEL PLAN

LONDON AVE. OUTFALL CANAL, PARALLEL PROTECTION FLOODPROOFING OF MIRABEAU AVE. & FILMORE AVE. BRIDGES
ORLEANS PARISH, LOUISIANA

FILMORE AVENUE SEALED BRIDGE ABUTMENT DETAILS

DESIGNED BY: JCS	DATE: 3-12-01	PLOT SCALE: 1"=4'	PLOT DATE: 6-27-01
DRAWN BY: MJF	CARD FILE: 9362671		FILE NO. H-4-44674
CHECKED BY: JCS	SOLICITATION NO. DACW29-01-B-0092		DWG: 71 OF 97
SUBMITTED BY: MEYER ENGINEERS, LTD. DESIGN ENGINEER			

UNIQUE INCENTIVE CLAUSES TO ENGINEER YIELD KEY TO HIGHER PROFITS

Safety is a Part of Your Contract

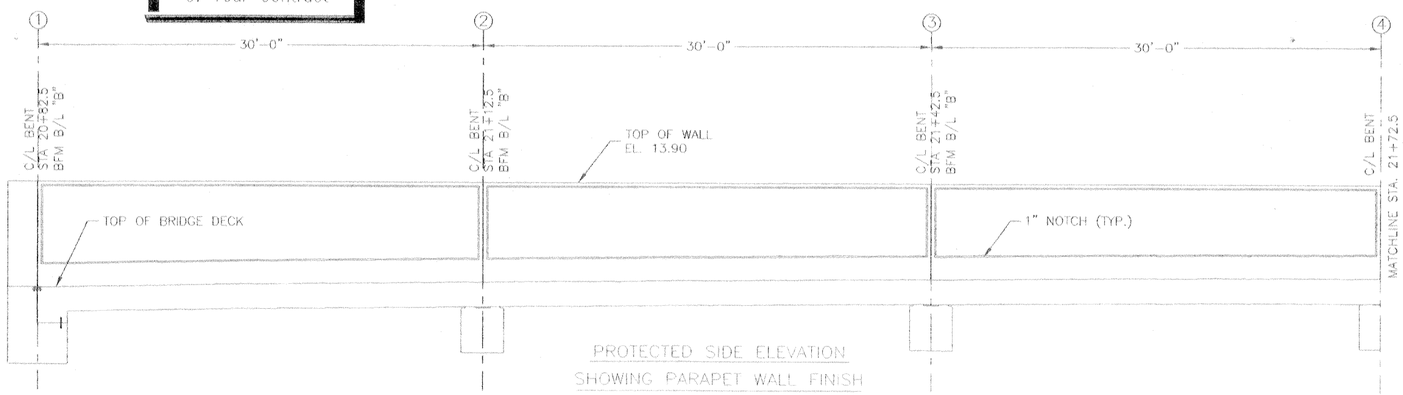

PROTECTED SIDE ELEVATION
SHOWING PARAPET WALL FINISH
SCALE: 1" = 1'-0"

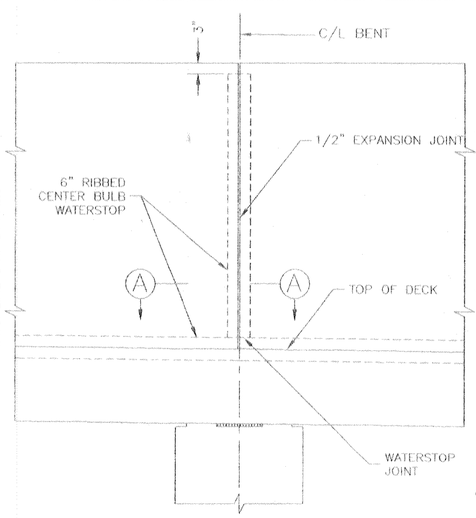

PROTECTED SIDE ELEVATION
PARAPET WALL JOINTS AT BENTS
SCALE: 3/4" = 1'-0"

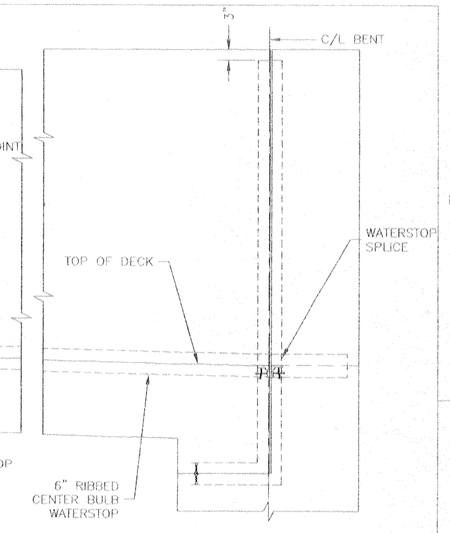

PROTECTED SIDE ELEVATION
DECK/PARAPET WALL SEAL AT ABUTMENTS
SCALE: 3/4" = 1'-0"

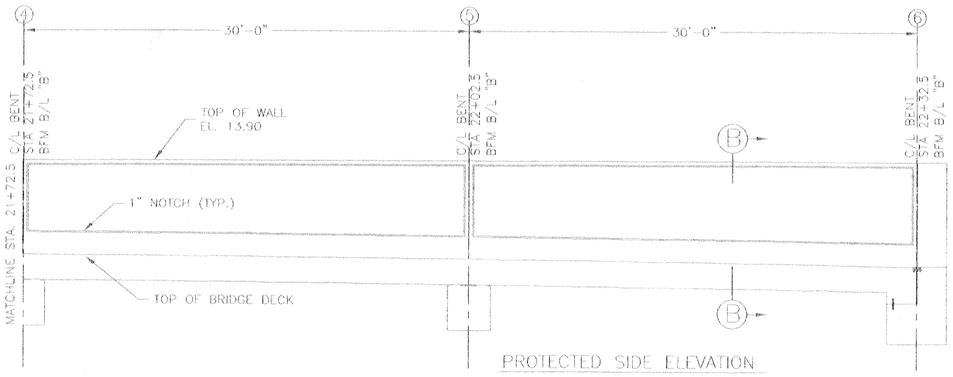

PROTECTED SIDE ELEVATION
SHOWING PARAPET WALL FINISH
SCALE: 1" = 1'-0"

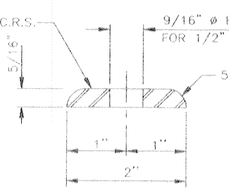

SEAL RETAINING BAR
SCALE: 12" = 1'-0"

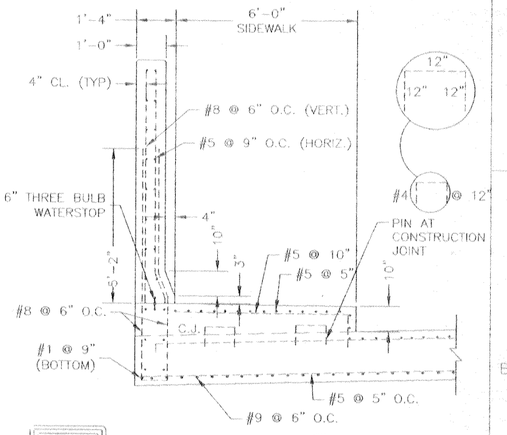

DETAIL
SCALE: 1/2"=1'

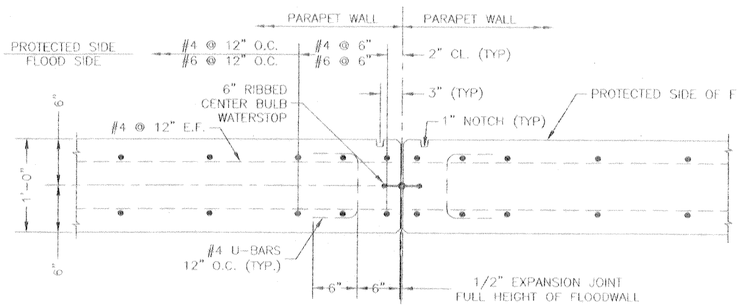

6" THREE BULB WATERSTOP
SCALE: 1" = 2"

SECTION (A)
SCALE: 6"=1'

SCALE: 1" = 1'-0"

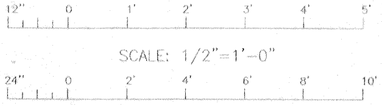

SCALE: 1/2"=1'-0"

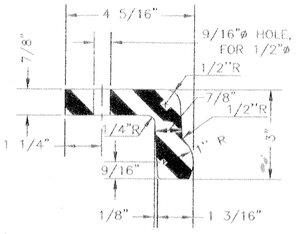

"L" TYPE WATERSTOP
SCALE: 6" = 1'-0"

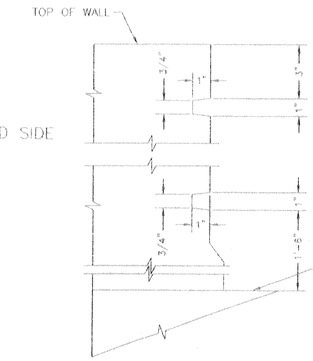

FLOOD SIDE

SECTION (B)
SCALE: 3"=1'-0"

SCALE: 4" = 1'-0"

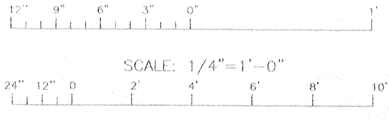

SCALE: 1/4"=1'-0"

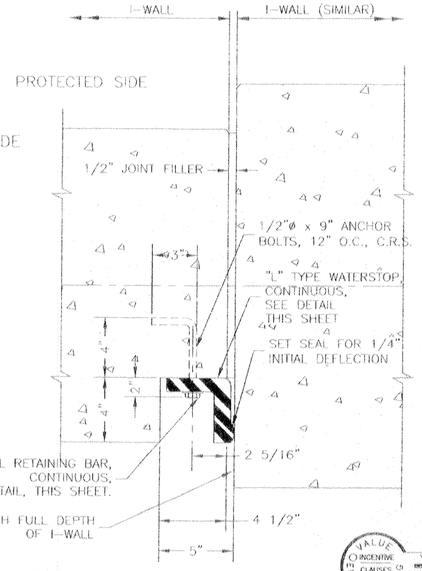

FLOOD SIDE PLAN
I-WALL TO ABUTMENT
SCALE: 3" = 1'-0"

SYMBOL	DESCRIPTION	DATE	APPROVED
	REVISIONS		

U.S. ARMY ENGINEER DISTRICT, NEW ORLEANS
CORPS OF ENGINEERS
NEW ORLEANS, LOUISIANA

BOARD OF LEVEE COMMISSIONERS
ORLEANS LEVEE DISTRICT
NEW ORLEANS, LOUISIANA

MEYER ENGINEERS, LTD. METAIRIE, LOUISIANA
LAKE PONTCHARTRAIN, LA AND VICINITY
HIGH LEVEL PLAN

LONDON AVE. OUTFALL CANAL, PARALLEL PROTECTION FLOODPROOFING OF MIRABEAU AVE. & FILMORE AVE. BRIDGES
ORLEANS PARISH, LOUISIANA

FILMORE AVENUE SEALED BRIDGE ABUTMENT JOINTS & PARAPET WALL DETAILS

DESIGNED BY: JCS	DATE: 3-12-01	PLOT SCALE: 1"=3'	PLOT DATE: 6-27-01
DRAWN BY: MJF			
CHECKED BY: JCS	CADD FILE: 9362672		FILE NO. H-4-44674
SUBMITTED BY: MEYER ENGINEERS, LTD. DESIGN ENGINEER	SOLICITATION NO. DACW29-01-B-0092		DWG. 72 OF 97

Safety is a Part of Your Contract

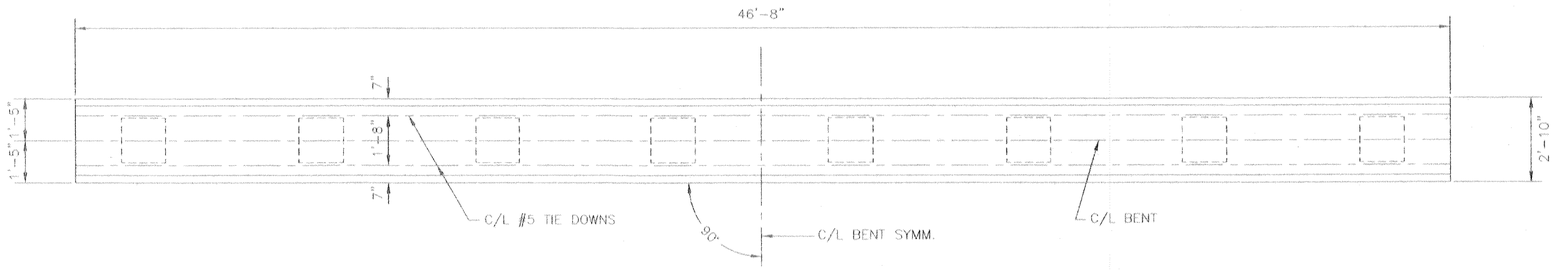

PLAN
SCALE: 1/2"=1'-0"

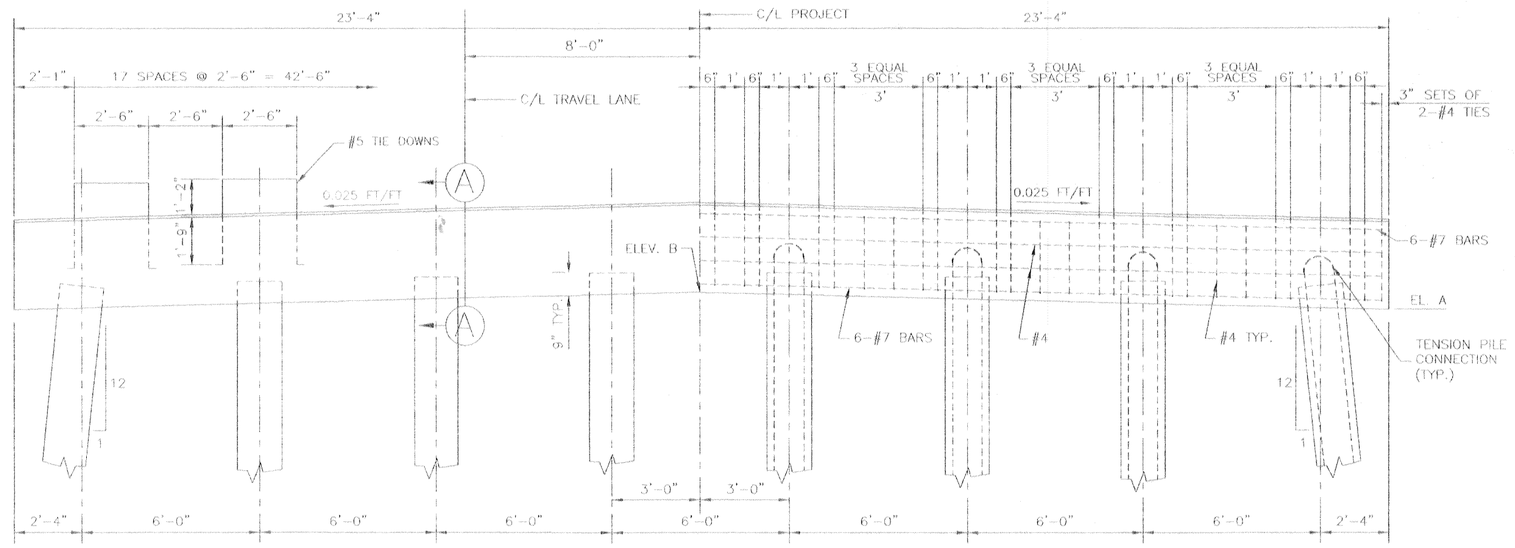

ELEVATION
SCALE: 1/2"=1'-0"

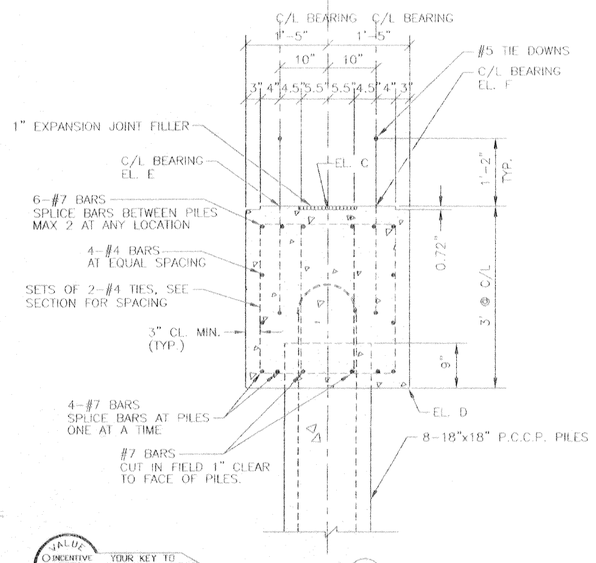

SECTION (A)
SCALE: 1"=1'-0"

C/L BENT	BFM B/L STATION	ELEV. A	ELEV. B
②	21+12.5	1.93	2.52
③	21+42.5	2.11	2.70
④	21+72.5	2.11	2.70
⑤	22+02.5	1.93	2.52

C/L BENT	BFM B/L STATION	ELEV. C*	ELEV. D	ELEV. E	ELEV. F
②	21+12.5	5.32	2.32	5.39	5.40
③	21+42.5	5.50	2.50	5.58	5.58
④	21+72.5	5.50	2.50	5.58	5.58
⑤	22+02.5	5.32	2.32	5.40	5.39

* ELEVATION AT BOTTOM OF EXPANSION JOINT MATERIAL

REFERENCE DRAWINGS
FOR GENERAL NOTES, SEE DWG. NO. 4
FOR BENT LOCATIONS, SEE DWG. NO. 47
FOR STRUCTURE PLAN AND ELEVATION, SEE DWG. NO. 57

NOTE:
BRIDGE DECK AND SHEET PILE NOT SHOWN IN ELEVATION

PILE LENGTH = ±81.50 FT.
REQ'D PILE LENGTH SHOWN ARE FOR ESTIMATING PURPOSE (WITH FACTOR OF SAFETY=2.00). A PILE TEST SHALL BE PERFORMED PRIOR TO ORDERING PILES.

SERVICE LOAD = 30 TONS
18"x18" P.C.P. TIP ELEV. = -75.5

SCALE: 1" = 1'-0"
12" 0 1' 2' 3' 4' 5'

SCALE: 1/2" = 1'-0"
24" 12" 0 2' 4' 6' 8' 10'

C-A-D

SYMBOL	DESCRIPTION	DATE	APPROVED

REVISIONS

U.S. ARMY ENGINEER DISTRICT, NEW ORLEANS
CORPS OF ENGINEERS
NEW ORLEANS, LOUISIANA

BOARD OF LEVEE COMMISSIONERS
ORLEANS LEVEE DISTRICT
NEW ORLEANS, LOUISIANA

MEYER ENGINEERS, LTD. METAIRIE, LOUISIANA
LAKE PONTCHARTRAIN, LA. AND VICINITY

HIGH LEVEL PLAN
LONDON AVE. OUTFALL CANAL, PARALLEL PROTECTION FLOODPROOFING OF MIRABEAU AVE. & FILMORE AVE. BRIDGES
ORLEANS PARISH, LOUISIANA

FILMORE AVENUE SEALED BRIDGE INTERMED. BENT PLAN AND ELEVATION

DESIGNED BY: JCS	DATE: 3-12-01	PLOT SCALE: 1"=2'	PLOT DATE: 6-27-01
DRAWN BY: MJE			
CHECKED BY: JCS	CADD FILE: 9362073		FILE NO. H-4-44674
SUBMITTED BY: MEYER ENGINEERS, LTD. DESIGN ENGINEER	SOLICITATION NO. DACW29-01-B-0092		DWG. 73 OF 97

VALUE ENGINEERING INCENTIVE CLAUSES — YOUR KEY TO HIGHER PROFITS

Safety is a Part of Your Contract

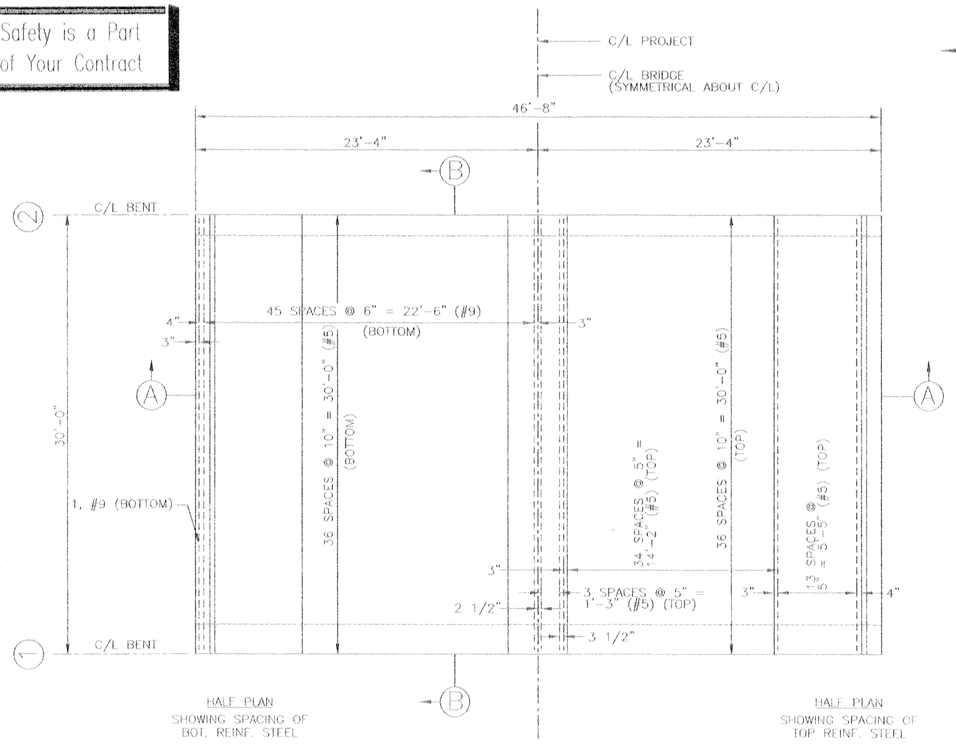

PLAN SHOWING SPACING OF TRANS. REINF. STEEL

SCALE: 1/4"=1'-0"

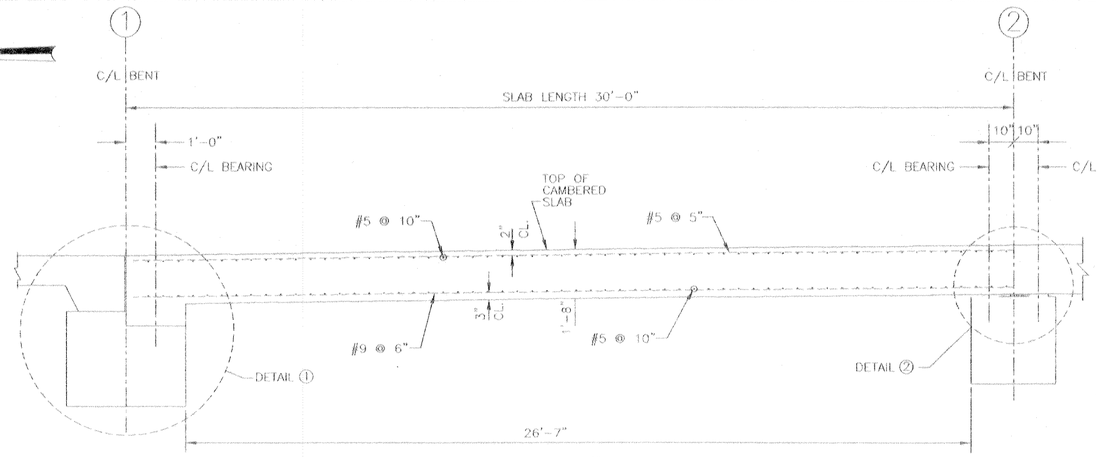

SECTION (B)

SCALE: 1/2"=1'-0"

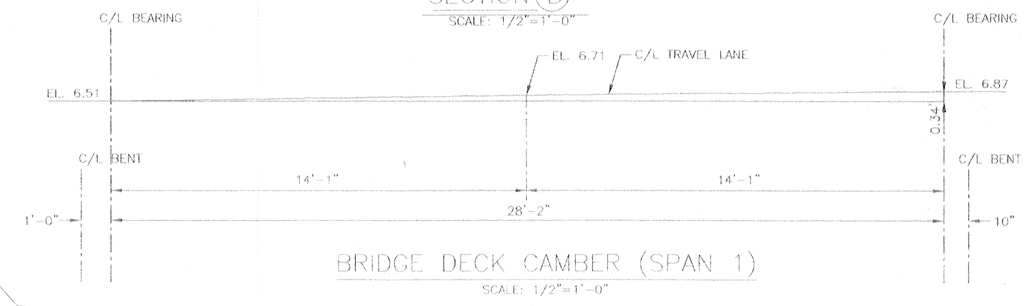

BRIDGE DECK CAMBER (SPAN 1)

SCALE: 1/2"=1'-0"

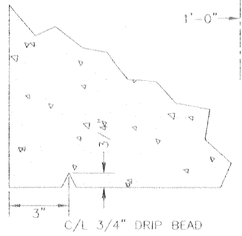

DETAIL (3)

SCALE: 4"=1'-0"

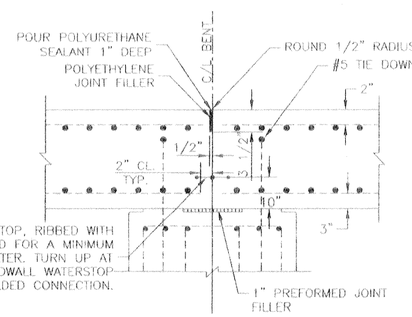

DETAIL (2)

SCALE: 1"=1'-0"

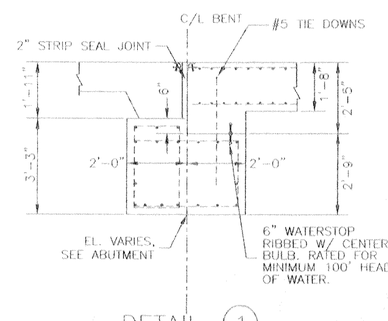

DETAIL (1)

SCALE: 1/2"=1'-0"

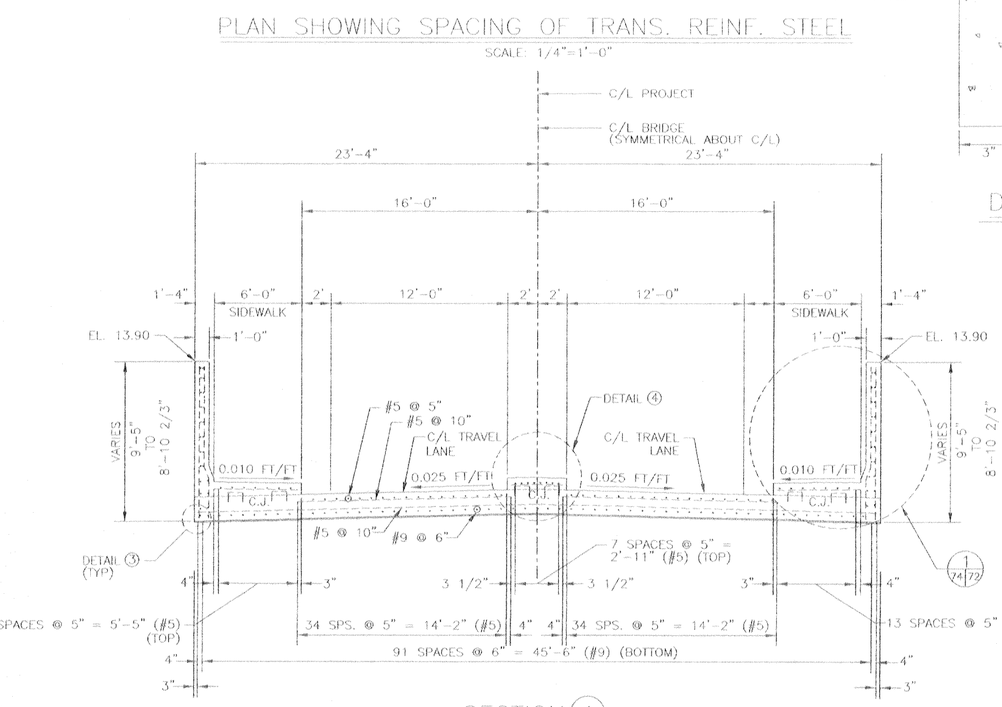

SECTION (A)

SCALE: 1/4"=1'-0"

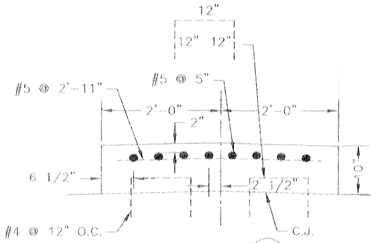

DETAIL (4)

SCALE: 1"=1'-0"

REFERENCE DRAWINGS

FOR GENERAL NOTES, SEE DWG. NO. 4
FOR SPAN LAYOUT, SEE DWG. NO. 57

SCALE: 1" = 1'-0"

SCALE: 1/2" = 1'-0"

SCALE: 4" = 1'-0"

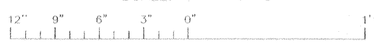

SCALE: 1/4" = 1'-0"

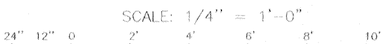

THE GUIDE TO INCENTIVE CLAUSES FOR ENGINEERS
YOUR KEY TO HIGHER PROFITS

SYMBOL	DESCRIPTION	DATE	APPROVED
	REVISIONS		

U.S. ARMY ENGINEER DISTRICT, NEW ORLEANS
CORPS OF ENGINEERS
NEW ORLEANS, LOUISIANA

BOARD OF LEVEE COMMISSIONERS
ORLEANS LEVEE DISTRICT
NEW ORLEANS, LOUISIANA

MEYER ENGINEERS, LTD. METAIRIE, LOUISIANA
LAKE PONTCHARTRAIN, LA. AND VICINITY
HIGH LEVEL PLAN

LONDON AVE. OUTFALL CANAL, PARALLEL PROTECTION FLOODPROOFING OF MIRABEAU AVE. & FILMORE AVE. BRIDGES

ORLEANS PARISH, LOUISIANA

FILMORE AVE. BRIDGE 30'-0" CONCRETE SLAB SPAN 46'-8" ROADWAY 90° CROSSING TWO WAY TANGENT CROWN (SPAN 1)

DESIGNED BY: JCS	DATE: 3-12-01	PLOT SCALE: 1"=4'	PLOT DATE: 6-27-01
DRAWN BY: HL			
CHECKED BY: JCS	CADD FILE: 9362874		FILE NO. H-4-44674
SUBMITTED BY: MEYER ENGINEERS, LTD. DESIGN ENGINEER	SOLICITATION NO. DACW29-01-B-0092		DWG. 74 OF 97

Safety is a Part of Your Contract

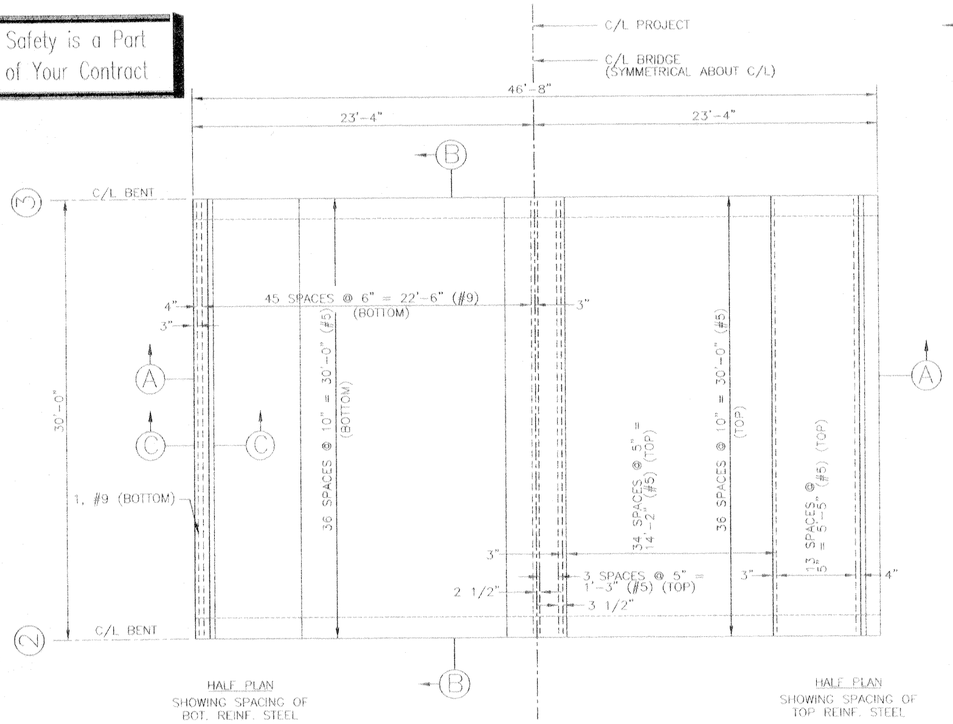

PLAN SHOWING SPACING OF TRANS. REINF. STEEL

SCALE: 1/4"=1'-0"

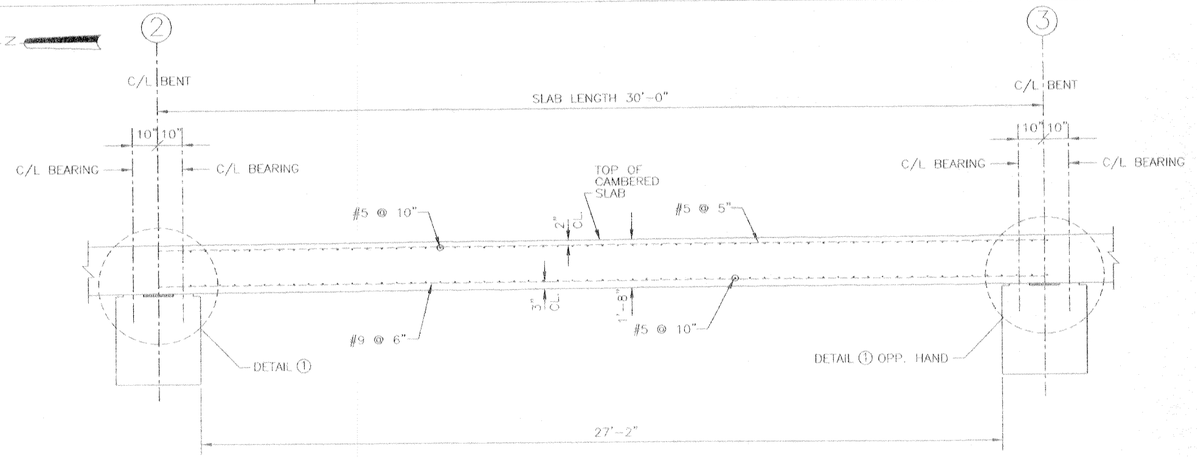

SECTION (B)

SCALE: 1/2"=1'-0"

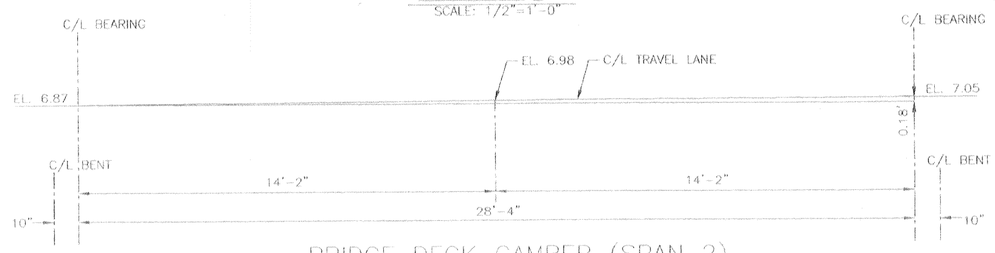

BRIDGE DECK CAMBER (SPAN 2)

SCALE: 1/2"=1'-0"

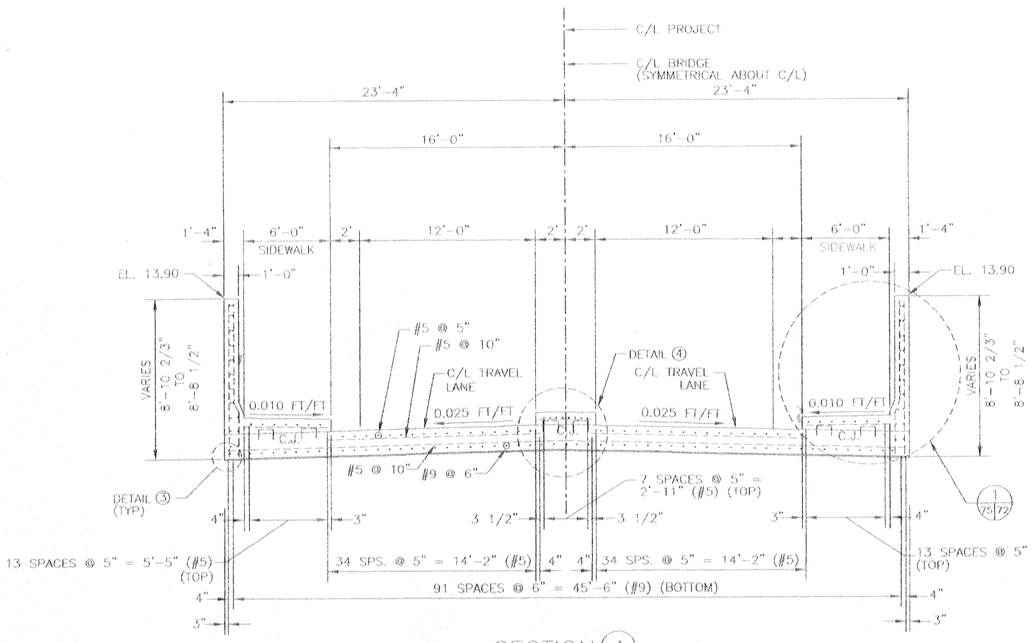

SECTION (A)

SCALE: 1/4"=1'-0"

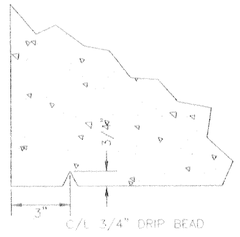

DETAIL (3)

SCALE: 4"=1'-0"

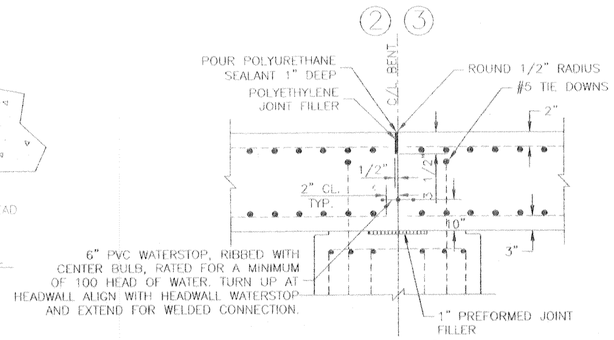

DETAIL (2)

SCALE: 1"=1'-0"

@ BENT (3) OPP. HAND

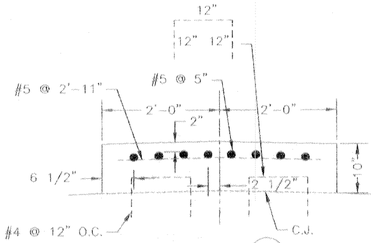

DETAIL (4)

SCALE: 1"=1'-0"

SCALE: 1" = 1'

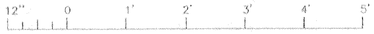

SCALE: 1/2" = 1'-0"

SCALE: 4" = 1'-0"

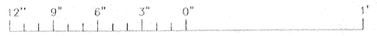

SCALE: 1/4" = 1'-0"

VALUE INCENTIVE CLAUSES — YOUR KEY TO HIGHER PROFITS

REFERENCE DRAWINGS

FOR GENERAL NOTES, SEE DWG. NO. 4
FOR SPAN LAYOUT, SEE DWG. NO. 57

SYMBOL	DESCRIPTION	DATE	APPROVED

REVISIONS

U.S. ARMY ENGINEER DISTRICT, NEW ORLEANS
CORPS OF ENGINEERS
NEW ORLEANS, LOUISIANA

BOARD OF LEVEE COMMISSIONERS
ORLEANS LEVEE DISTRICT
NEW ORLEANS, LOUISIANA

MEYER ENGINEERS, LTD. METAIRIE, LOUISIANA

LAKE PONTCHARTRAIN, LA. AND VICINITY
HIGH LEVEL PLAN

LONDON AVE. OUTFALL CANAL, PARALLEL PROTECTION FLOODPROOFING OF FILMORE AVE. & MIRABEAU AVE. BRIDGES

ORLEANS PARISH, LOUISIANA

FILMORE AVE. BRIDGE 30'-0" CONCRETE SLAB SPAN 46'-8" ROADWAY 90° CROSSING TWO WAY TANGENT CROWN (SPAN 2)

DESIGNED BY: JCS	DATE: 3-12-01	PLOT SCALE: 1"=4'	PLOT DATE: 6-27-01
DRAWN BY: HL			
CHECKED BY: JCS	CADD FILE: 9362075		FILE NO. H-4-44674
SUBMITTED BY: MEYER ENGINEERS, LTD. DESIGN ENGINEER	SOLICITATION NO. DACW29-01-B-0092		DWG. 75 OF 97

Safety is a Part of Your Contract

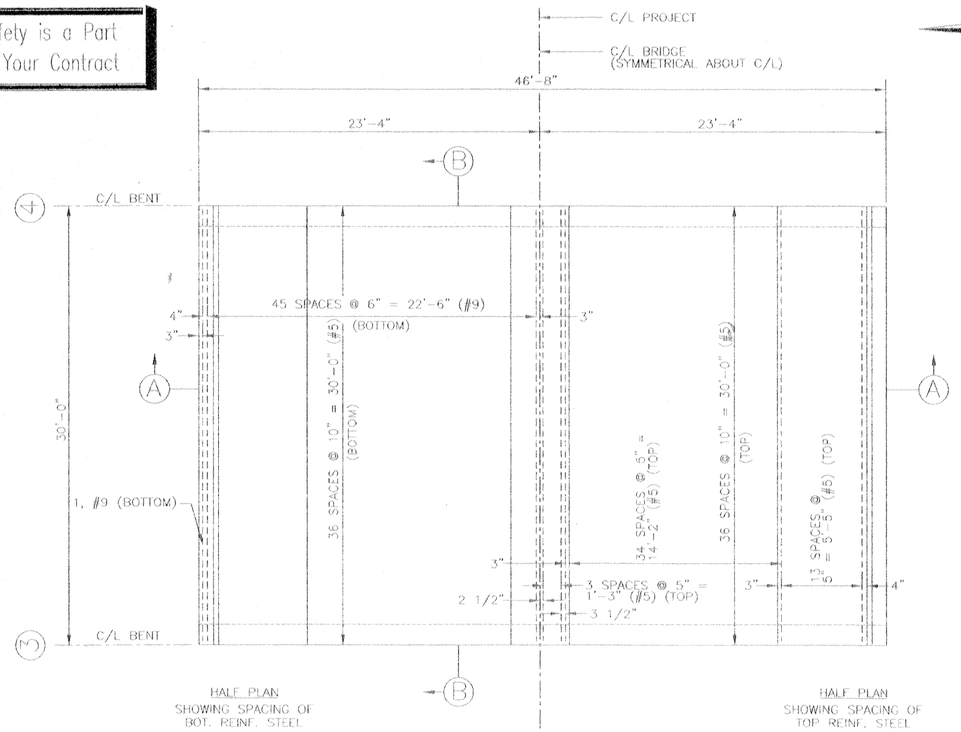

PLAN SHOWING SPACING OF TRANS. REINF. STEEL

SCALE: 1/4"=1'-0"

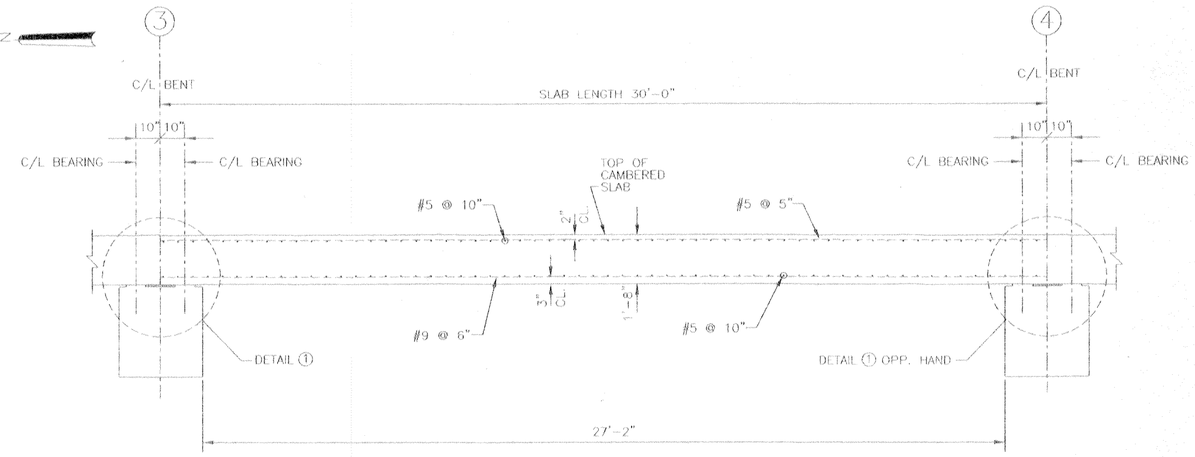

SECTION (B)

SCALE: 1/2"=1'-0"

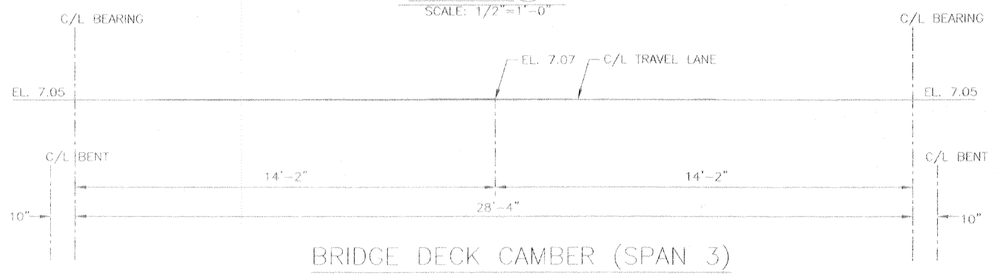

BRIDGE DECK CAMBER (SPAN 3)

SCALE: 1/2"=1'-0"

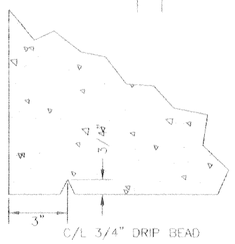

DETAIL (3)

SCALE: 4"=1'-0"

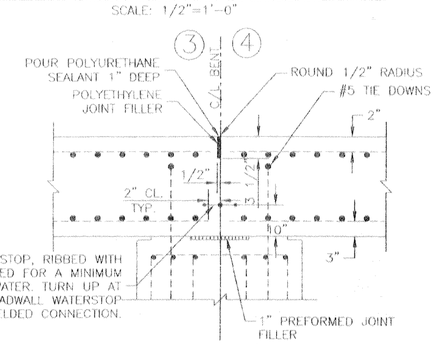

DETAIL (2)

SCALE: 1"=1'-0"

@ BENT (4) OPP. HAND

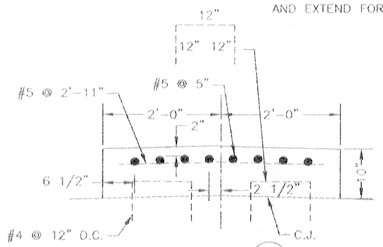

DETAIL (4)

SCALE: 1"=1'-0"

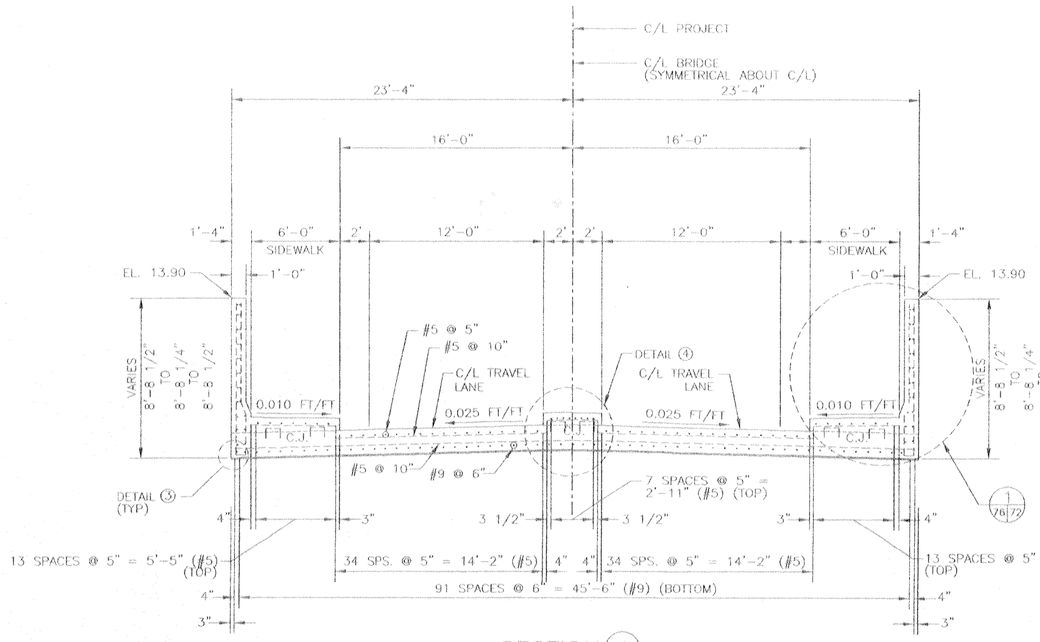

SECTION (A)

SCALE: 1/4"=1'-0"

SCALE: 1" = 1'-0"

12" 0 1' 2' 3' 4' 5'

SCALE: 1/2" = 1'-0"

24" 0 2' 4' 6' 8' 10'

SCALE: 4" = 1'-0"

12" 9" 6" 3" 0" 1'

SCALE: 1/4" = 1'-0"

24" 12" 0 2' 4' 6' 8' 10'

VALUE ENGINEERING INCENTIVE CLAUSES YOUR KEY TO HIGHER PROFITS

REFERENCE DRAWINGS

FOR GENERAL NOTES, SEE DWG. NO. 4
FOR SPAN LAYOUT, SEE DWG. NO. 57

SYMBOL	DESCRIPTION	DATE	APPROVED

REVISIONS

U.S. ARMY ENGINEER DISTRICT, NEW ORLEANS
CORPS OF ENGINEERS
NEW ORLEANS, LOUISIANA

BOARD OF LEVEE COMMISSIONERS
ORLEANS LEVEE DISTRICT
NEW ORLEANS, LOUISIANA

MEYER ENGINEERS, LTD. METAIRIE, LOUISIANA

LAKE PONTCHARTRAIN, LA. AND VICINITY
HIGH LEVEL PLAN

LONDON AVE. OUTFALL CANAL, PARALLEL PROTECTION FLOODPROOFING OF MIRABEAU AVE. & FILMORE AVE. BRIDGES

ORLEANS PARISH, LOUISIANA

FILMORE AVE. BRIDGE 30'-0" CONCRETE SLAB SPAN
46'-8" ROADWAY 90° CROSSING
TWO WAY TANGENT CROWN
(SPAN 3)

DESIGNED BY: JCS	DATE: 3-12-01	PLOT SCALE: 1"=4'	PLOT DATE: 6-27-01
DRAWN BY: HL			
CHECKED BY: JCS	CADD FILE: 9362876		FILE NO. H-4-44674
SUBMITTED BY: MEYER ENGINEERS, LTD. DESIGN ENGINEER	SOLICITATION NO. DACW29-01-B-0092		DWG 76 OF 97

Safety is a Part of Your Contract

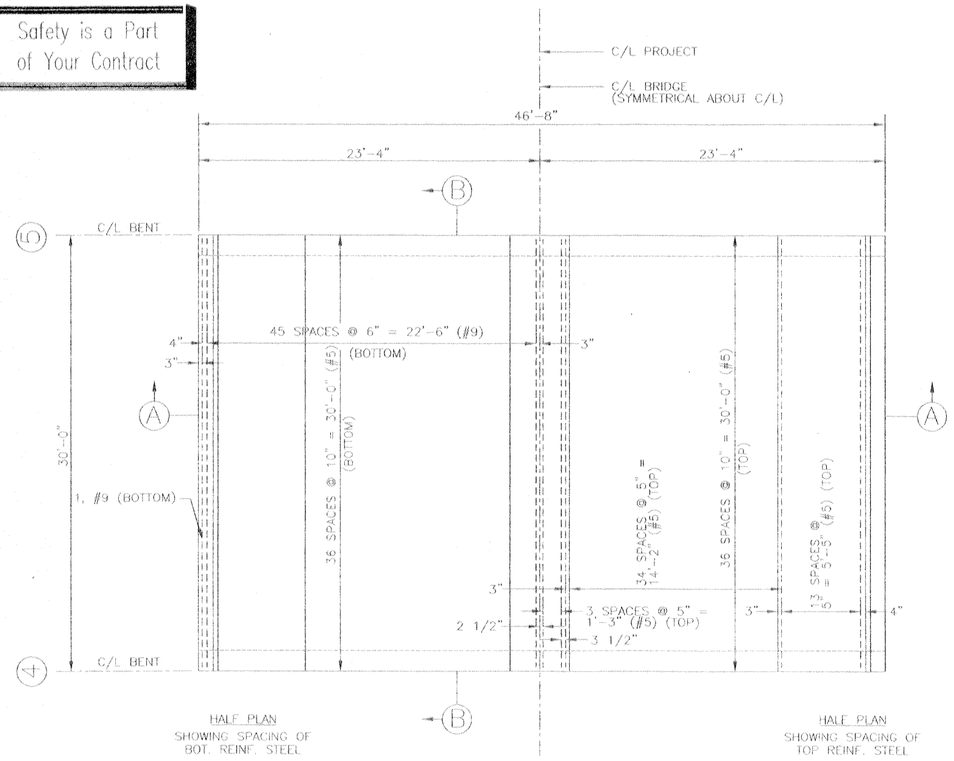

PLAN SHOWING SPACING OF TRANS. REINF. STEEL

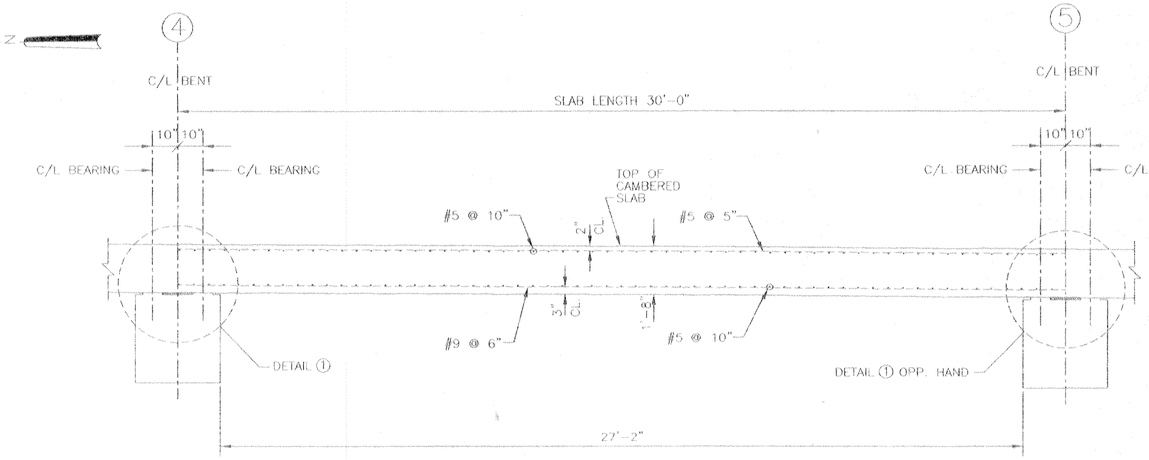

SECTION (B)
SCALE: 1/2"=1'-0"

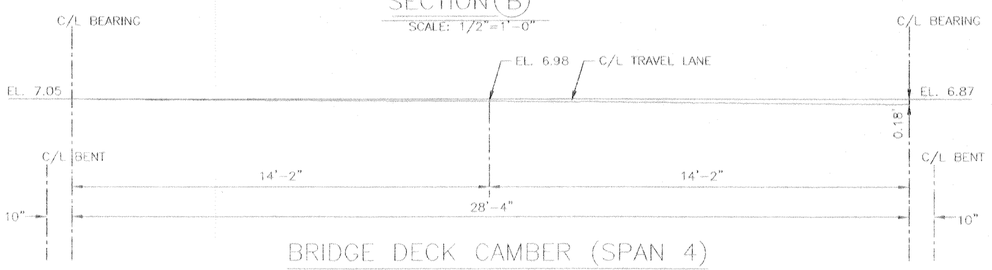

BRIDGE DECK CAMBER (SPAN 4)
SCALE: 1/2"=1'-0"

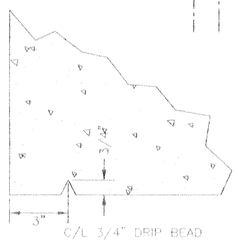

DETAIL (3)
SCALE: 4"=1'-0"

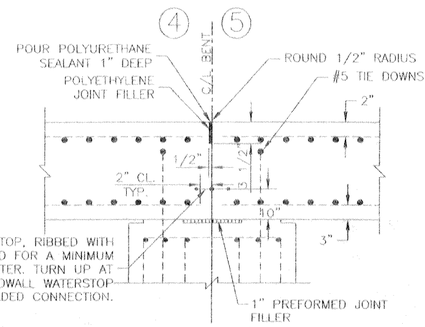

DETAIL (2)
SCALE: 1"=1'-0"
@ BENT (5) OPP. HAND

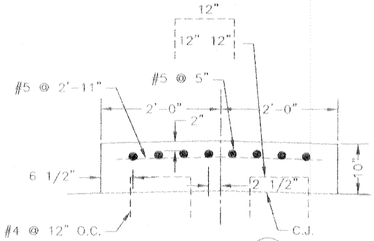

DETAIL (4)
SCALE: 1"=1'-0"

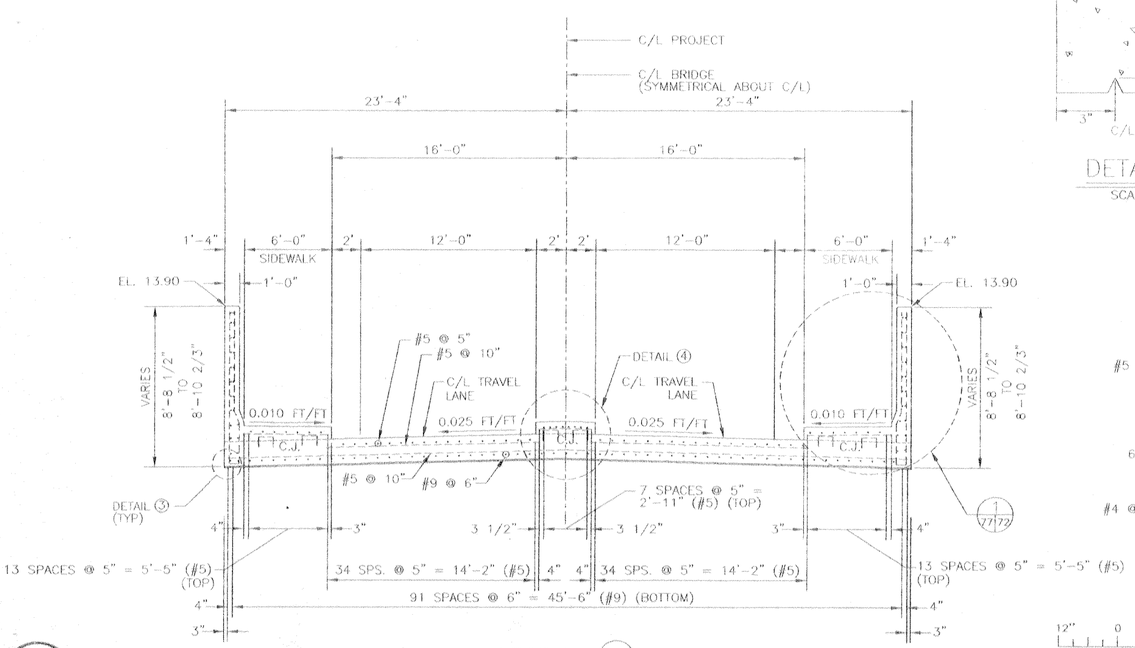

SECTION (A)
SCALE: 1/4"=1'-0"

SCALE: 1" = 1'-0"
12" 0 1' 2' 3' 4' 5'

SCALE: 1/2" = 1'-0"
24" 0 2' 4' 6' 8' 10'

SCALE: 4" = 1'-0"
12" 9" 6" 3" 0" 1'

SCALE: 1/4" = 1'-0"
24" 12" 0 2' 4' 6' 8' 10'

VALUE ENGINEERING INCENTIVE CLAUSES — YOUR KEY TO HIGHER PROFITS

C•A•D

REFERENCE DRAWINGS

FOR GENERAL NOTES, SEE DWG. NO. 4
FOR SPAN LAYOUT, SEE DWG. NO. 57

SYMBOL	DESCRIPTION	DATE	APPROVED
	REVISIONS		

U.S. ARMY ENGINEER DISTRICT, NEW ORLEANS
CORPS OF ENGINEERS
NEW ORLEANS, LOUISIANA

BOARD OF LEVEE COMMISSIONERS
ORLEANS LEVEE DISTRICT
NEW ORLEANS, LOUISIANA

MEYER ENGINEERS, LTD. METAIRIE, LOUISIANA

LAKE PONTCHARTRAIN, LA. AND VICINITY
HIGH LEVEL PLAN
LONDON AVE. OUTFALL CANAL, PARALLEL PROTECTION FLOODPROOFING OF FILMORE AVE. & MIRABEAU AVE. BRIDGES
ORLEANS PARISH, LOUISIANA
FILMORE AVE. BRIDGE 30'-0" CONCRETE SLAB SPAN
46'-8" ROADWAY 90° CROSSING
TWO WAY TANGENT CROWN
(SPAN 4)

DESIGNED BY: JCS	DATE: 3-12-01	PLOT SCALE: 1"=4'	PLOT DATE: 6-27-01
DRAWN BY: HL			
CHECKED BY: JCS	CADD FILE: 9362077		FILE NO. H-4-44674
SUBMITTED BY: MEYER ENGINEERS, LTD. DESIGN ENGINEER	SOLICITATION NO. DACW29-01-B-0092		DWG. 77 OF 97

Safety is a Part of Your Contract

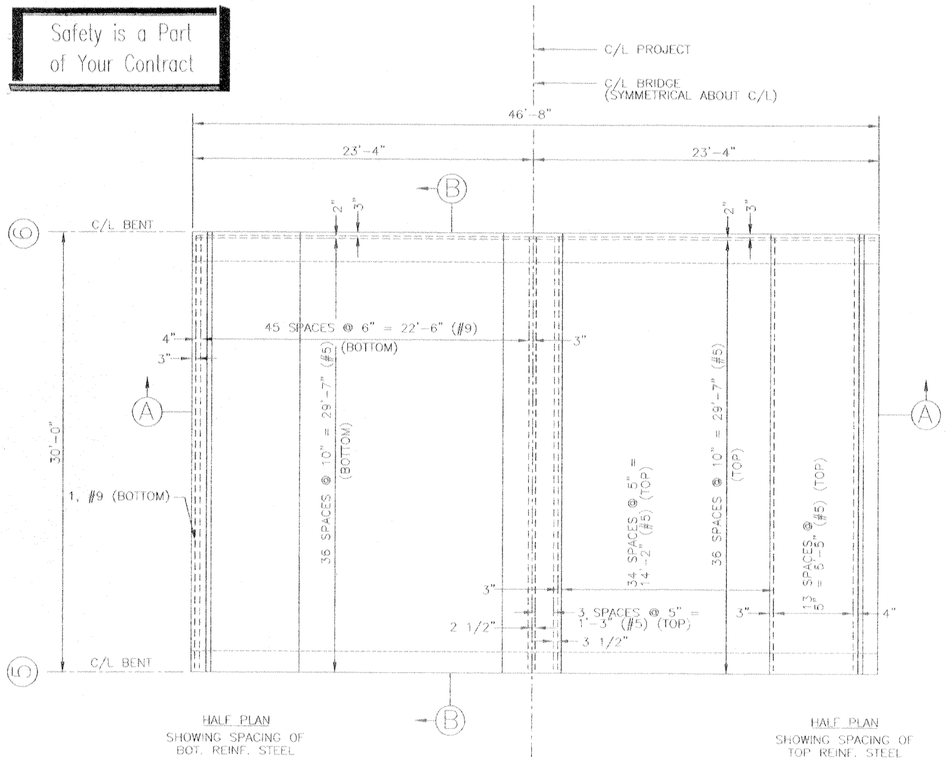

PLAN SHOWING SPACING OF TRANS. REINF. STEEL

SCALE: 1/4"=1'-0"

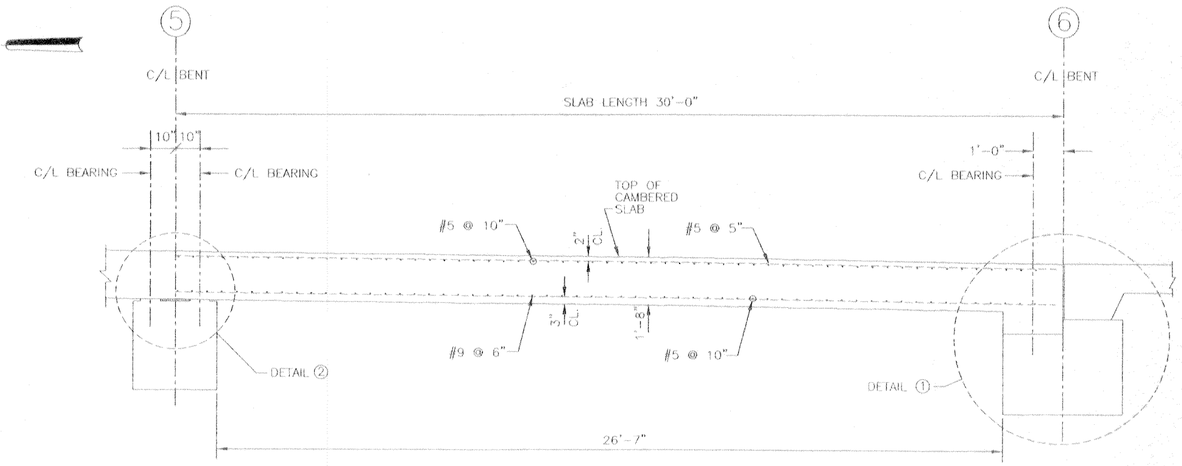

SECTION (B)

SCALE: 1/2"=1'-0"

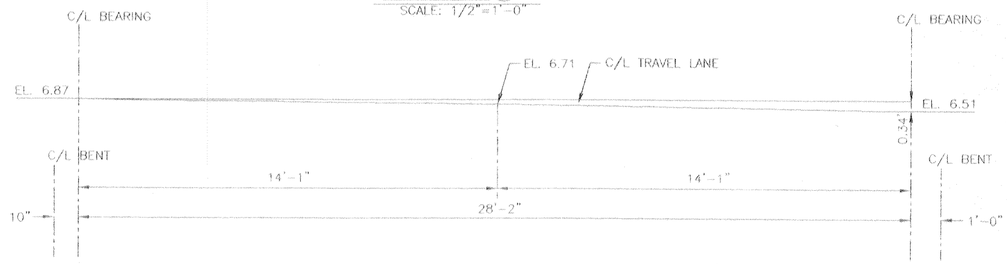

BRIDGE DECK CAMBER (SPAN 5)

SCALE: 1/2"=1'-0"

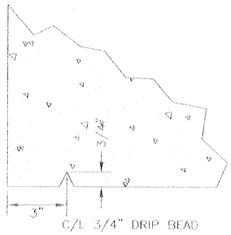

DETAIL (3)

SCALE: 4"=1'-0"

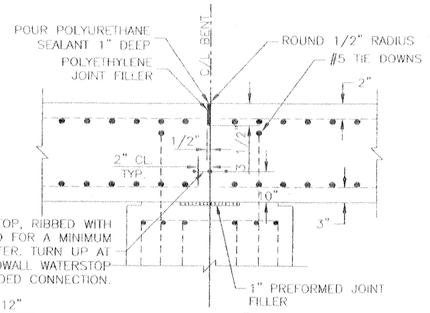

DETAIL (2)

SCALE: 1"=1'-0"

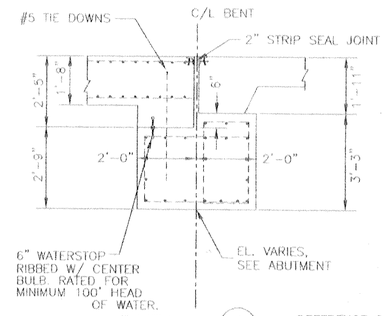

DETAIL (1)

SCALE: 1/2"=1'-0"

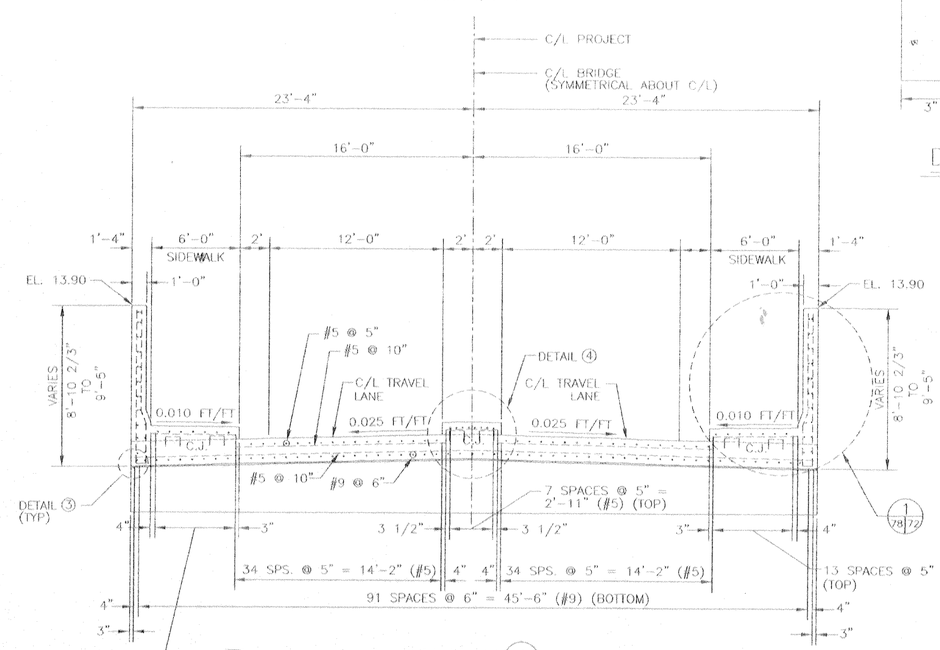

SECTION (A)

SCALE: 1/4"=1'-0"

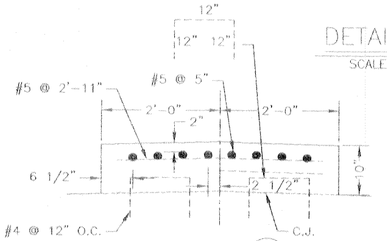

DETAIL (4)

SCALE: 1"=1'-0"

SCALE: 1" = 1'-0"

12" 0 1' 2' 3' 4' 5'

SCALE: 1/2" = 1'-0"

24" 0 2' 4' 6' 8' 10'

SCALE: 4" = 1'-0"

12" 9" 6" 3" 0" 1'

SCALE: 1/4" = 1'-0"

24" 12" 0 2' 4' 6' 8' 10'

VALUE INCENTIVE CLAUSES TO ENGINEERS — YOUR KEY TO HIGHER PROFITS

C-A-D

REFERENCE DRAWINGS

FOR GENERAL NOTES, SEE DWG. NO. 4
FOR SPAN LAYOUT, SEE DWG. NO. 57

SYMBOL	DESCRIPTION	DATE	APPROVED

REVISIONS

U.S. ARMY ENGINEER DISTRICT, NEW ORLEANS
CORPS OF ENGINEERS
NEW ORLEANS, LOUISIANA

BOARD OF LEVEE COMMISSIONERS
ORLEANS LEVEE DISTRICT
NEW ORLEANS, LOUISIANA

MEYER ENGINEERS, LTD. METAIRIE, LOUISIANA

LAKE PONTCHARTRAIN, LA. AND VICINITY
HIGH LEVEL PLAN

LONDON AVE. OUTFALL CANAL, PARALLEL PROTECTION FLOODPROOFING OF MIRABEAU AVE. & FILMORE AVE. BRIDGES
ORLEANS PARISH, LOUISIANA.

FILMORE AVE. BRIDGE 30'-0" CONCRETE SLAB SPAN
46'-8" ROADWAY 90° CROSSING
TWO WAY TANGENT CROWN
(SPAN 5)

DESIGNED BY: JCS	DATE: 3-12-01	PLOT SCALE: 1"=4'	PLOT DATE: 6-27-01
DRAWN BY: HL			
CHECKED BY: JCS	CADD FILE: 9382978		FILE NO. H-4-44674
SUBMITTED BY: MEYER ENGINEERS, LTD. DESIGN ENGINEER	SOLICITATION NO. DACW29-01-B-0092		DWG. 78 OF 97

EASTBOUND LANES – FINAL

BFM B/L STATION	C/L PROJECT	INSIDE GUTTER	PROFILE GRADE LINE	EDGE TRAVEL LINE	OUTSIDE GUTTER	EDGE OF SIDEWALK
17+67	*	*	*	*	*	N.A.
18+27	-2.66	-1.99	-2.30	-2.29	-2.30	N.A.
18+87	0.82	0.15	-0.16	-0.15	-0.16	N.A.
18+97	1.29	0.62	0.31	0.32	0.31	N.A.
19+07.5	1.80	1.13	0.82	0.83	0.82	N.A.
19+17	2.27	1.60	1.29	1.30	1.29	N.A.
19+27	2.74	2.07	1.76	1.77	1.76	N.A.
19+37	3.19	2.52	2.21	2.22	2.21	N.A.
19+47	3.62	2.95	2.64	2.65	2.64	N.A.
19+57	4.03	3.36	3.05	3.06	3.05	N.A.
19+67	4.43	3.76	3.45	3.46	3.45	N.A.
19+77	4.80	4.13	3.82	3.93	3.82	N.A.
19+87	5.16	4.49	4.17	4.19	4.17	N.A.
19+97	5.49	4.82	4.50	4.52	4.50	N.A.
20+07	5.83	5.14	4.81	4.84	4.81	N.A.
20+17	6.16	5.43	5.10	5.13	5.10	N.A.
20+27	6.48	5.71	5.37	5.41	5.37	N.A.
20+37	6.77	5.97	5.62	5.67	5.62	*
20+47	7.05	6.20	5.85	5.90	5.85	6.75
20+57	7.26	6.41	6.06	6.11	6.06	6.95
20+67	7.46	6.61	6.26	6.31	6.26	7.15
20+77	7.63	6.78	6.43	6.48	6.43	7.32
20+87	7.78	6.93	6.58	6.63	6.58	7.47
20+97	7.91	7.06	6.71	6.76	6.71	7.60
21+07	8.02	7.17	6.82	6.87	6.82	7.71
21+17	8.11	7.26	6.91	6.96	6.91	7.80
21+27	8.08	7.23	6.98	7.03	6.98	7.87
21+37	8.23	7.38	7.03	7.08	7.03	7.92
21+47	8.26	7.41	7.06	7.11	7.06	7.95
21+57	8.27	7.42	7.07	7.12	7.07	7.96
21+57.5	8.27	7.42	7.07	7.12	7.07	7.96
21+67	8.27	7.42	7.07	7.12	7.07	7.96
21+77	8.24	7.39	7.04	7.09	7.04	7.93
21+87	8.19	7.34	6.99	7.04	6.99	7.88
21+97	8.12	7.27	6.92	6.92	6.92	7.81
22+07	8.03	7.18	6.83	6.88	6.83	7.72
22+17	7.57	6.72	6.72	6.77	6.72	7.61
22+27	7.44	6.59	6.59	6.64	6.59	7.48
22+37	7.64	6.79	6.44	6.49	6.44	7.33
22+47	7.47	6.62	6.27	6.32	6.27	7.16
22+57	7.28	6.43	6.08	6.13	6.08	6.97
22+67	7.08	6.23	5.88	5.93	5.88	6.77
22+77	6.81	6.00	5.65	5.70	5.65	*
22+87	6.51	5.74	5.40	5.44	5.40	N.A.
22+97	6.19	5.46	5.13	5.16	5.13	N.A.
23+07	5.86	5.17	4.84	4.87	4.84	N.A.
23+17	5.52	4.85	4.53	4.55	4.53	N.A.
23+27	5.18	4.51	4.20	4.21	4.20	N.A.
23+37	4.83	4.16	3.85	3.86	3.85	N.A.
23+47	4.46	3.79	3.48	3.49	3.48	N.A.
23+57	4.07	3.40	3.09	3.10	3.09	N.A.
23+67	3.67	3.00	2.69	2.70	2.69	N.A.
23+77	3.24	2.57	2.26	2.27	2.26	N.A.
23+87	2.79	2.12	1.81	1.82	1.81	N.A.
23+97	2.32	1.65	1.34	1.35	1.34	N.A.
24+07	1.83	1.16	0.85	0.86	0.85	N.A.
24+07.5	1.80	1.13	0.82	0.83	0.82	N.A.
24+17	1.29	0.62	0.31	0.32	0.31	N.A.
24+27	0.82	0.15	-0.16	-0.15	-0.16	N.A.
24+77	-0.90	-1.57	-1.88	-1.87	-1.88	N.A.
25+27	-2.62	-3.29	-3.60	-3.59	-3.60	N.A.
25+38	*	*	*	*	*	N.A.

WESTBOUND LANES – FINAL

BFM B/L STATION	C/L PROJECT	GRADE LINE	PROFILE GRADE LINE	EDGE TRAVEL LINE	OUTSIDE GUTTER	EDGE OF SIDEWALK
17+70	*	*	*	*	*	N.A.
18+27	-2.66	-1.99	-2.30	-2.29	-2.30	N.A.
18+87	0.82	0.15	-0.16	-0.15	-0.16	N.A.
18+97	1.29	0.62	0.31	0.32	0.31	N.A.
19+07.5	1.80	1.13	0.82	0.83	0.82	N.A.
19+17	2.27	1.60	1.29	1.30	1.29	N.A.
19+27	2.74	2.07	1.76	1.77	1.76	N.A.
19+37	3.19	2.52	2.21	2.22	2.21	N.A.
19+47	3.62	2.95	2.64	2.65	2.64	N.A.
19+57	4.03	3.36	3.05	3.06	3.05	N.A.
19+67	4.43	3.76	3.45	3.46	3.45	N.A.
19+77	4.80	4.13	3.82	3.93	3.82	N.A.
19+87	5.16	4.49	4.17	4.19	4.17	N.A.
19+97	5.49	4.82	4.50	4.52	4.50	N.A.
20+07	5.83	5.14	4.81	4.84	4.81	N.A.
20+17	6.16	5.43	5.10	5.13	5.10	N.A.
20+27	6.48	5.71	5.37	5.41	5.37	N.A.
20+37	6.77	5.97	5.62	5.67	5.62	*
20+47	7.05	6.20	5.85	5.90	5.85	6.75
20+57	7.26	6.41	6.06	6.11	6.06	6.95
20+67	7.46	6.61	6.26	6.31	6.26	7.15
20+77	7.63	6.78	6.43	6.48	6.43	7.32
20+87	7.78	6.93	6.58	6.63	6.58	7.47
20+97	7.91	7.06	6.71	6.76	6.71	7.60
21+07	8.02	7.17	6.82	6.87	6.82	7.71
21+17	8.11	7.26	6.91	6.96	6.91	7.80
21+27	8.08	7.23	6.98	7.03	6.98	7.87
21+37	8.23	7.38	7.03	7.08	7.03	7.92
21+47	8.26	7.41	7.06	7.11	7.06	7.95
21+57	8.27	7.42	7.07	7.12	7.07	7.96
21+57.5	8.27	7.42	7.07	7.12	7.07	7.96
21+67	8.27	7.42	7.07	7.12	7.07	7.96
21+77	8.24	7.39	7.04	7.09	7.04	7.93
21+87	8.19	7.34	6.99	7.04	6.99	7.88
21+97	8.12	7.27	6.92	6.92	6.92	7.81
22+07	8.03	7.18	6.83	6.88	6.83	7.72
22+17	7.57	6.72	6.72	6.77	6.72	7.61
22+27	7.44	6.59	6.59	6.64	6.59	7.48
22+37	7.64	6.79	6.44	6.49	6.44	7.33
22+47	7.47	6.62	6.27	6.32	6.27	7.16
22+57	7.28	6.43	6.08	6.13	6.08	6.97
22+67	7.08	6.23	5.88	5.93	5.88	6.77
22+77	6.81	6.00	5.65	5.70	5.65	*
22+87	6.51	5.74	5.40	5.44	5.40	N.A.
22+97	6.19	5.46	5.13	5.16	5.13	N.A.
23+07	5.86	5.17	4.84	4.87	4.84	N.A.
23+17	5.52	4.85	4.53	4.55	4.53	N.A.
23+27	5.18	4.51	4.20	4.21	4.20	N.A.
23+37	4.83	4.16	3.85	3.86	3.85	N.A.
23+47	4.46	3.79	3.48	3.49	3.48	N.A.
23+57	4.07	3.40	3.09	3.10	3.09	N.A.
23+67	3.67	3.00	2.69	2.70	2.69	N.A.
23+77	3.24	2.57	2.26	2.27	2.26	N.A.
23+87	2.79	2.12	1.81	1.82	1.81	N.A.
23+97	2.32	1.65	1.34	1.35	1.34	N.A.
24+07	1.83	1.16	0.85	0.86	0.85	N.A.
24+07.5	1.80	1.13	0.82	0.83	0.82	N.A.
24+17	1.29	0.62	0.31	0.32	0.31	N.A.
24+27	0.82	0.15	-0.16	-0.15	-0.16	N.A.
24+77	-1.18	-1.85	-2.16	-2.15	-2.16	N.A.
25+27	-3.18	-3.85	-4.16	-4.15	-4.16	N.A.
25+50	*	*	*	*	*	N.A.

Safety is a Part of Your Contract

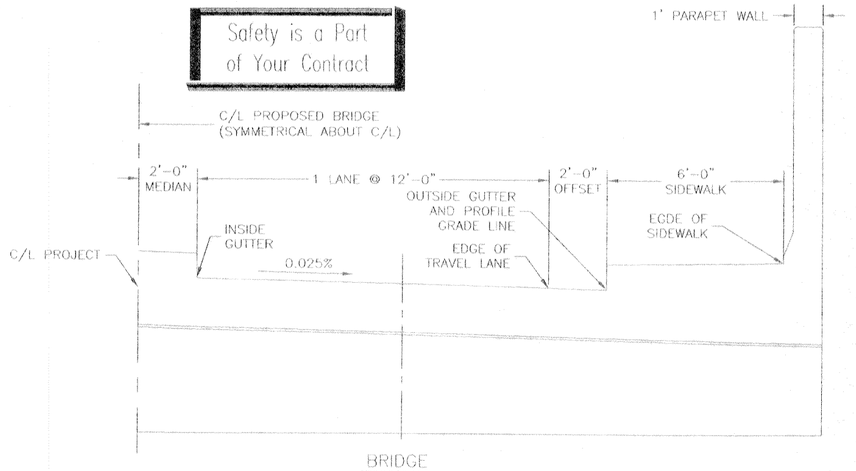

BRIDGE

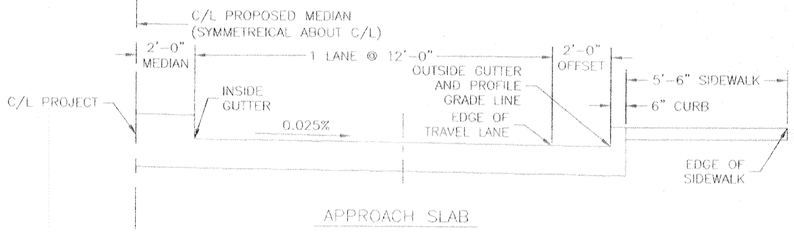

APPROACH SLAB

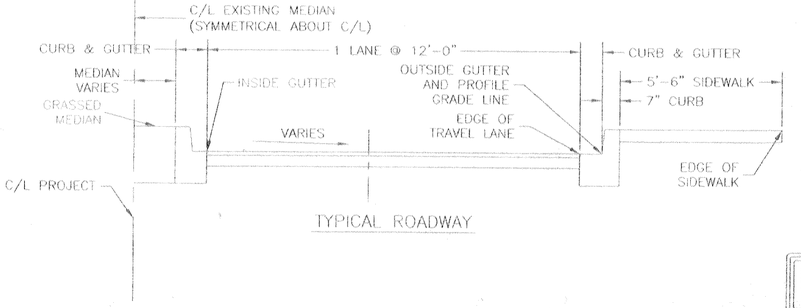

TYPICAL ROADWAY

FINAL ELEVATIONS – KEY PLANS

SCALE: 1/4" = 1'-0"

C•A•D

* MATCH EXISTING GRADE

REFERENCE DRAWINGS
FOR GENERAL NOTES, SEE DWG. NO. 4
FOR PLAN/PROFILE, SEE DWG. NO. 47.
FOR PAVEMENT COMPONENTS AND THICKNESSES, SEE DWG. 80.

VALUE ENGINEERING INCENTIVE CLAUSES — YOUR KEY TO HIGHER PROFITS

SYMBOL	DESCRIPTION	DATE	APPROVED

REVISIONS

U.S. ARMY ENGINEER DISTRICT, NEW ORLEANS
CORPS OF ENGINEERS
NEW ORLEANS, LOUISIANA

BOARD OF LEVEE COMMISSIONERS
ORLEANS LEVEE DISTRICT
NEW ORLEANS, LOUISIANA

MEYER ENGINEERS, LTD. METAIRIE, LOUISIANA
LAKE PONTCHARTRAIN, LA. AND VICINITY
HIGH LEVEL PLAN

LONDON AVE. OUTFALL CANAL, PARALLEL PROTECTION FLOODPROOFING OF MIRABEAU AVE. & FILMORE AVE. BRIDGE
ORLEANS PARISH, LOUISIANA

FILMORE AVENUE SEALED BRIDGE ROADWAY ELEVATIONS

DESIGNED BY: JCS	DATE: 3-12-01	PLOT SCALE: 1"=2'	PLOT DATE: 6-27-01
DRAWN BY: MJF			
CHECKED BY: JCS	CADD FILE: 9362879		FILE NO. H-4-44674
SUBMITTED BY: MEYER ENGINEERS, LTD. DESIGN ENGINEER	SOLICITATION NO. DACW29-01-B-0092		DWG. 79 OF 97

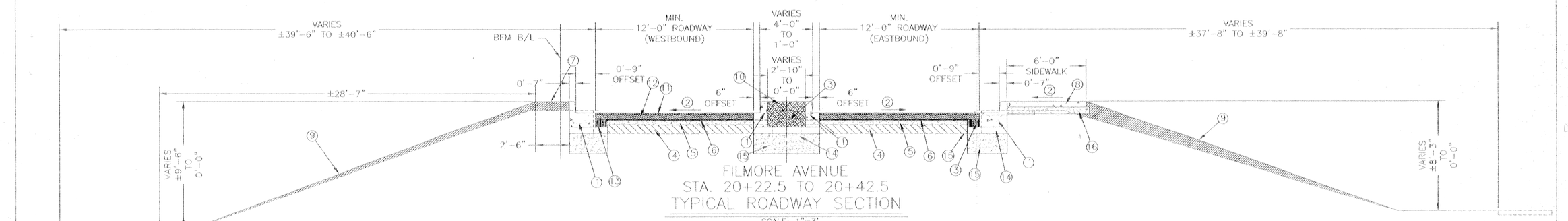

FILMORE AVENUE
STA. 20+22.5 TO 20+42.5
TYPICAL ROADWAY SECTION

SCALE: 1"=3'

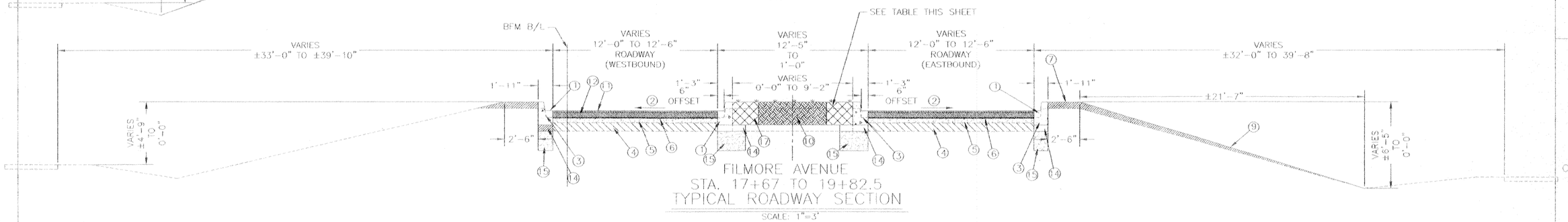

FILMORE AVENUE
STA. 17+67 TO 19+82.5
TYPICAL ROADWAY SECTION

SCALE: 1"=3'

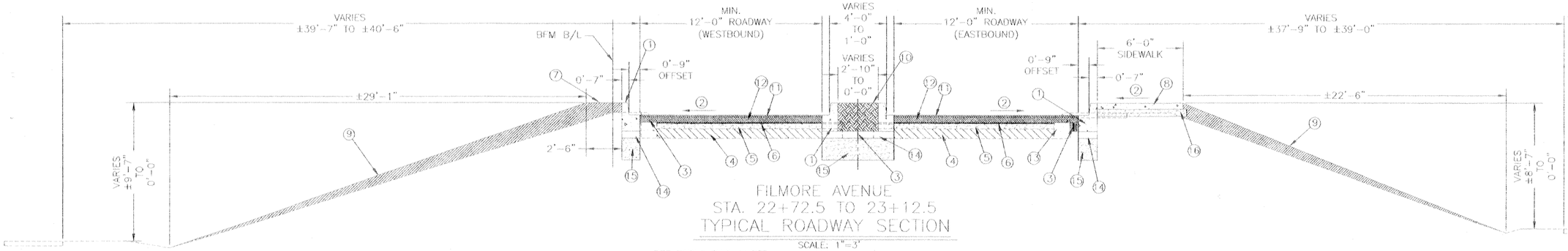

FILMORE AVENUE
STA. 22+72.5 TO 23+12.5
TYPICAL ROADWAY SECTION

SCALE: 1"=3'

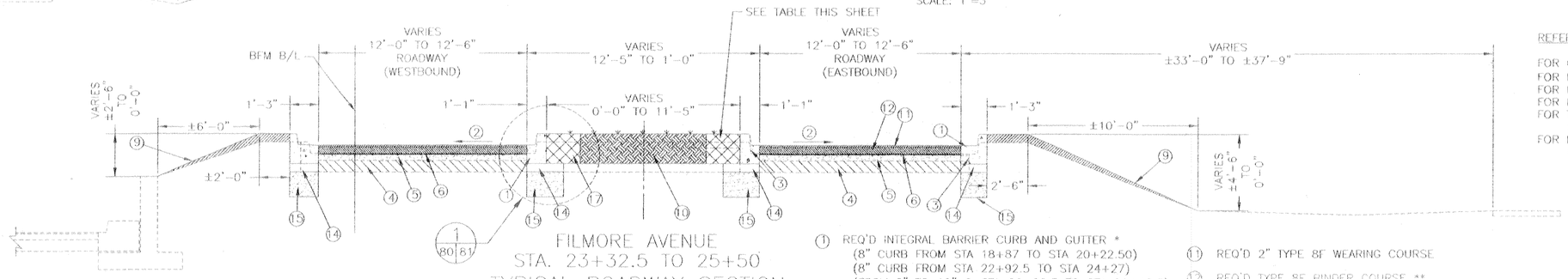

FILMORE AVENUE
STA. 23+32.5 TO 25+50
TYPICAL ROADWAY SECTION

SCALE: 1"=3'

MEDIAN SCHEDULE		
BFM B/L "B" STA. BEGIN	BFM B/L "B" STA. END	TYPE OF MEDIAN
±17+67	19+25.1	GRASS
19+25.1	24+88.5	CONC.
24+88.5	±25+38	GRASS

VALUE ENGINEERING INCENTIVE CLAUSES — YOUR KEY TO HIGHER PROFITS

Safety is a Part of Your Contract

SCALE: 1" = 3'

3' 0 3' 6' 9' 12' 15'

1. REQ'D INTEGRAL BARRIER CURB AND GUTTER *
   (8" CURB FROM STA 18+87 TO STA 20+22.50)
   (8" CURB FROM STA 22+92.5 TO STA 24+27)
   (FROM 8" TO 10" @ STA 20+22.5 TO STA 20+42.5)
   (FROM 10" TO 8" @ STA 22+72.5 TO STA 22+92.5)
2. SLOPE VARIES
3. EXISTING 8" BARRIER CURB AND GUTTER
4. EXISTING COMPACTED SHELLS (APPROX. 8" THICKNESS)
5. EXISTING PAVEMENT BASE (APPROX. 5" THICKNESS)
6. EXISTING PAVEMENT SURFACE (APPROX. 1" THICKNESS)
7. REQ'D GRADING TO TOP OF CURB
8. REQ'D 4" SIDEWALK
9. REQ'D GRADING TO MEET LEVEE SLOPES (1:2 MIN.)
10. GRASSED/CONCRETE MEDIAN (SEE SCHEDULE)
11. REQ'D 2" TYPE 8F WEARING COURSE
12. REQ'D TYPE 8F BINDER COURSE ** (THICKNESS VARIES)
13. REQ'D 5 1/2" TYPE 5A BASE COURSE
14. REQ'D 8 1/2" CRUSHED STONE BASE
15. REQ'D 18" SAND SUBBASE
16. REQ'D 6" COMPACTED SAND
17. REQ'D EXCAVATION

* EXISTING CURB TO REMAIN AT THE FOLLOWING LOCATIONS:
FROM STA 17+67 TO STA 18+87 (EASTBOUND LANE)
FROM STA 17+70 TO STA 18+87 (WESTBOUND LANE)
FROM STA 24+27 TO STA 25+50 (EAST & WEST BOUND LANES)

** THE BINDER COURSE SHALL BE PROVIDED AS NEEDED TO BRING THE ROADWAY SURFACE AT THE REQ'D ELEVATION.

REFERENCE DRAWINGS

FOR GENERAL NOTES, SEE DWG. NO. 4
FOR PLAN/PROFILE, SEE DWG. NO. 47
FOR DEMOLITION PLAN, SEE DWG. NO. 50
FOR ROADWAY ELEVATIONS, SEE DWG. NO. 79
FOR TYPICAL ROADWAY AND SIDEWALK DETAILS SEE DWG. NO. 81
FOR ROADWAY CROSS SECTIONS, SEE DWG. NO. 82

C-A-D

SYMBOL	DESCRIPTION	DATE	APPROVED

REVISIONS

U.S. ARMY ENGINEER DISTRICT, NEW ORLEANS
CORPS OF ENGINEERS
NEW ORLEANS, LOUISIANA

BOARD OF LEVEE COMMISSIONERS
ORLEANS LEVEE DISTRICT
NEW ORLEANS, LOUISIANA

MEYER ENGINEERS, LTD. METAIRIE, LOUISIANA
LAKE PONTCHARTRAIN, LA. AND VICINITY
HIGH LEVEL PLAN

LONDON AVE. OUTFALL CANAL, PARALLEL PROTECTION FLOODPROOFING OF MIRABEAU AVE. & FILMORE AVE. BRIDGES
ORLEANS PARISH, LOUISIANA

FILMORE AVENUE SEALED BRIDGE TYPICAL ROADWAY SECTIONS

DESIGNED BY: JCS	DATE: 3-12-01	PLOT SCALE: 1"=3'	PLOT DATE: 6-27-01
DRAWN BY: MJF			
CHECKED BY: JCS	CADD FILE: 9362880		FILE NO. H-4-44674
SUBMITTED BY: MEYER ENGINEERS, LTD. DESIGN ENGINEER	SOLICITATION NO. DACW29-01-B-0092		DWG. 80 OF 97

Safety is a Part of Your Contract

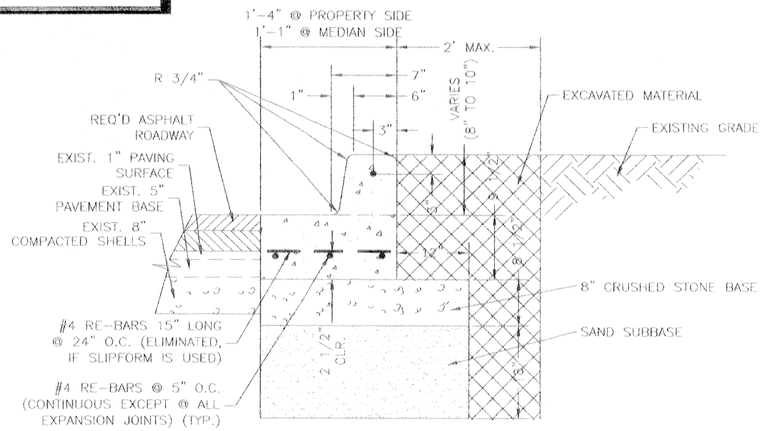

BARRIER CURB & GUTTERBOTTOM

SCALE: N.T.S.

DETAIL (1/80/81)

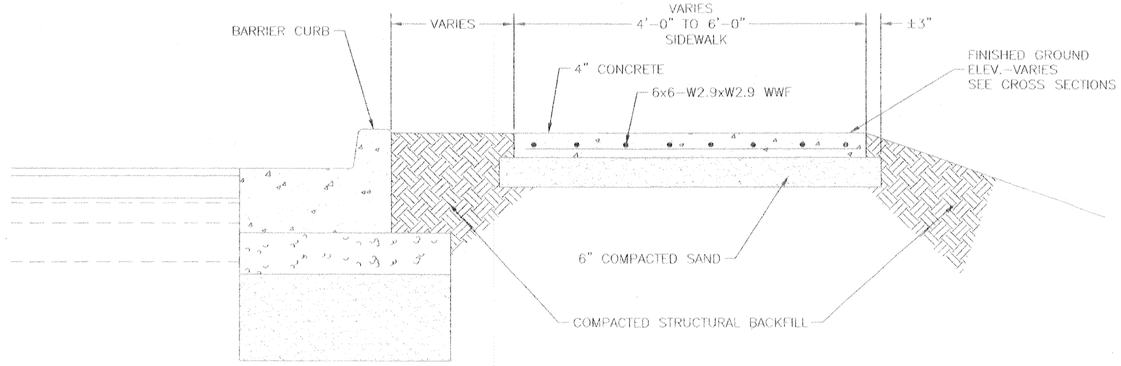

TYPICAL SIDEWALK SECTION

SCALE: N.T.S.

NOTES:
1. REQUIRED WALKS TO BE CONSTRUCTED TO GRADES AS SHOWN ON ROADWAY ELEVATIONS SHEET.

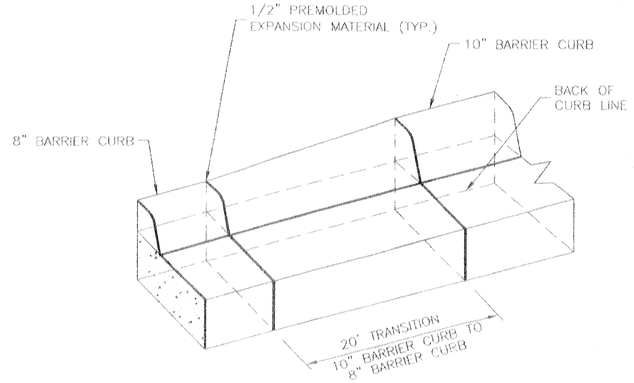

8" BARRIER CURB – 10" BARRIER CURB TRANSITION

SCALE: N.T.S.

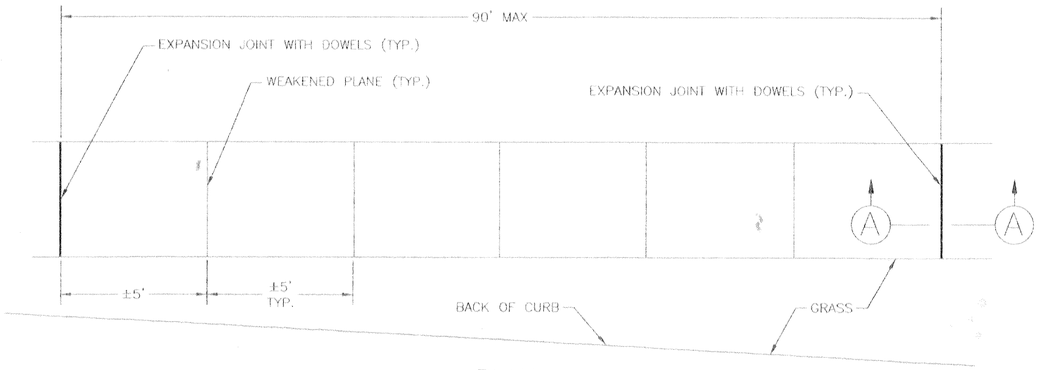

PLAN

SCALE: 1" = 1'

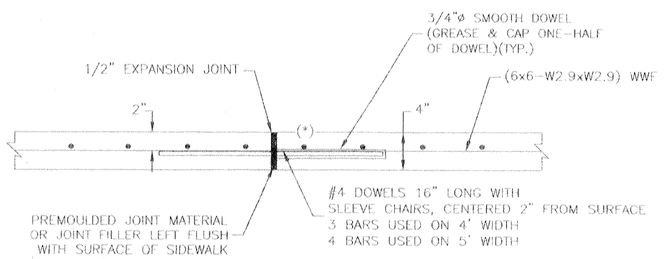

SECTION (A)

SCALE: N.T.S.

(*) THIS HALF OF DOWEL SHALL BE GREASED UNLESS PLASTIC OR EPOXY COATED DOWEL IS USED.

PORTLAND CEMENT CONCRETE SIDEWALK PAVEMENT

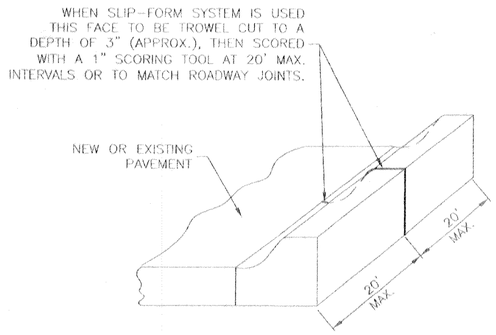

DETAIL SHOWING JOINTS IN CONCRETE CURB AND GUTTER

SCALE: N.T.S.

REFERENCE DRAWINGS

FOR GENERAL NOTES, SEE DWG. NO. 4
FOR PLAN/PROFILE, SEE DWG. NO. 47
FOR DEMOLITION PLAN, SEE DWG. NO. 50
FOR TYPICAL ROADWAY SECTIONS, SEE DWG. NO. 80

SYMBOL	DESCRIPTION	DATE	APPROVED
	REVISIONS		

U.S. ARMY ENGINEER DISTRICT, NEW ORLEANS
CORPS OF ENGINEERS
NEW ORLEANS, LOUISIANA

BOARD OF LEVEE COMMISSIONERS
ORLEANS LEVEE DISTRICT
NEW ORLEANS, LOUISIANA

MEYER ENGINEERS, LTD. METAIRIE, LOUISIANA

LAKE PONTCHARTRAIN, LA. AND VICINITY
HIGH LEVEL PLAN

LONDON AVE. OUTFALL CANAL, PARALLEL PROTECTION FLOODPROOFING OF MIRABEAU AVE. & FILMORE AVE. BRIDGES
ORLEANS PARISH, LOUISIANA

FILMORE AVENUE SEALED BRIDGE TYP. ROADWAY AND SIDEWALK DETAILS

DESIGNED BY: JCS DRAWN BY: MJF CHECKED BY: JCS	DATE: 3-12-01	PLOT SCALE: 1"=1'	PLOT DATE: 6-27-01
	CADD FILE: 9362081		FILE NO. H-4-44674
SUBMITTED BY: MEYER ENGINEERS, LTD. DESIGN ENGINEER	SOLICITATION NO. DACW29-01-B-0092		DWG. 81 OF 97

TAP THE INCENTIVE CLAUSES IN ENGINEER
YOUR KEY TO HIGHER PROFITS

FILMORE AVENUE

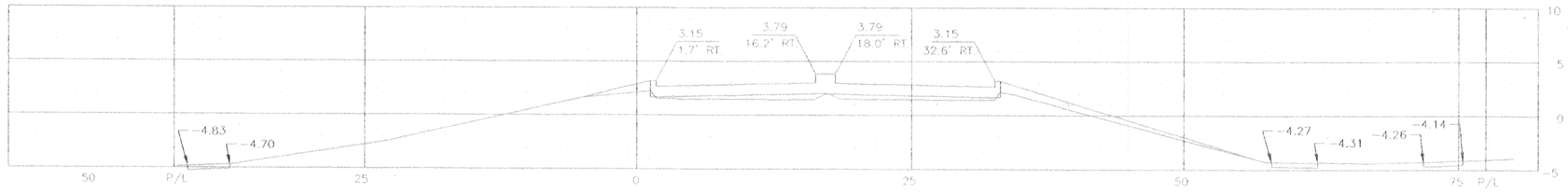

STA 19+50

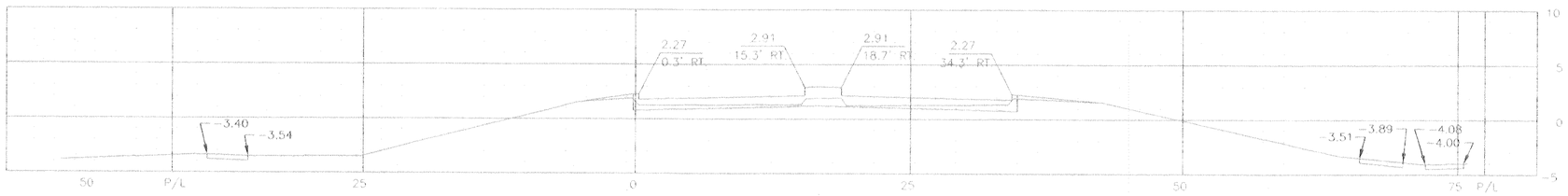

STA 19+25

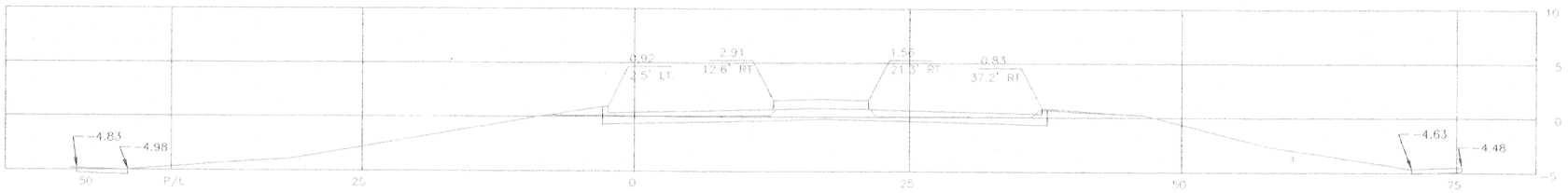

STA 19+00

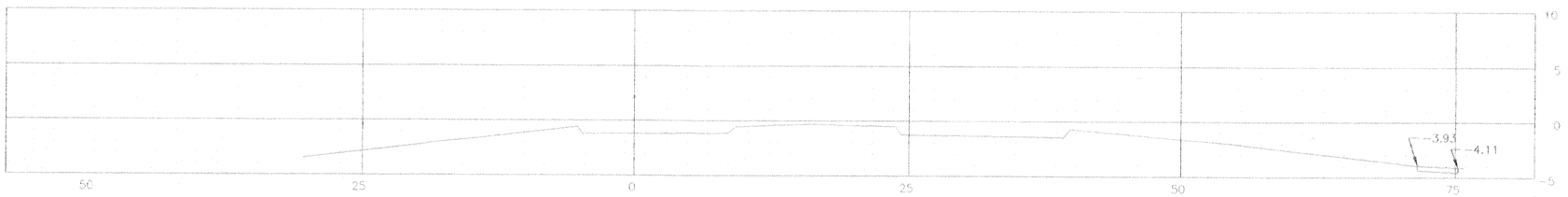

STA 18+75

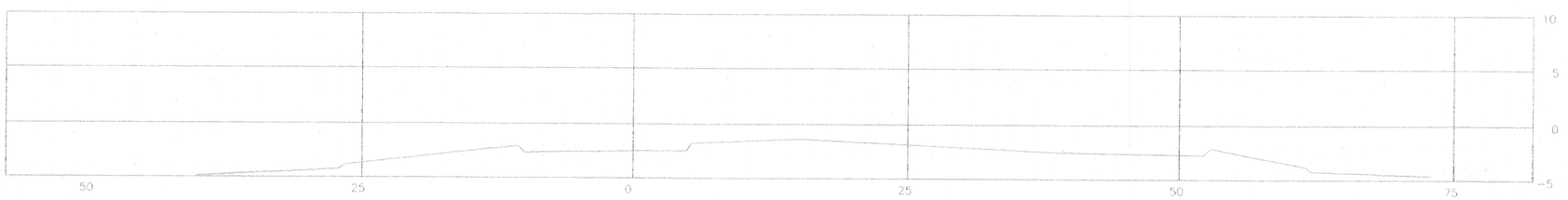

STA 18+50

Safety is a Part of Your Contract

SCALE: 1" = 10'-0"

10' 5' 0 10' 20' 30' 40' 50'

SYMBOL	DESCRIPTION	DATE	APPROVED
	REVISIONS		

U.S. ARMY ENGINEER DISTRICT, NEW ORLEANS
CORPS OF ENGINEERS
NEW ORLEANS, LOUISIANA

BOARD OF LEVEE COMMISSIONERS
ORLEANS LEVEE DISTRICT
NEW ORLEANS, LOUISIANA

MEYER ENGINEERS, LTD. METAIRIE, LOUISIANA

LAKE PONTCHARTRAIN, LA. AND VICINITY
HIGH LEVEL PLAN
LONDON AVE. OUTFALL CANAL, PARALLEL PROTECTION FLOODPROOFING OF MIRABEAU AVE. & FILMORE AVE. BRIDGE
ORLEANS PARISH, LOUISIANA

FILMORE AVENUE SEALED BRIDGE ROADWAY CROSS SECTIONS

DESIGNED BY: JCS	DATE: 3-12-01	PLOT SCALE: 1"=10'	PLOT DATE: 6-27-01
DRAWN BY: BMS			
CHECKED BY: JCS	CADD FILE: 93826B2A		FILE NO. H-4-44674
SUBMITTED BY: MEYER ENGINEERS, LTD DESIGN ENGINEER	SOLICITATION NO. DACW29-01-B-0092		DWG. 82A OF 97

VALUE INCENTIVE CLAUSES ENGINEER YOUR KEY TO HIGHER PROFITS

FILMORE AVENUE

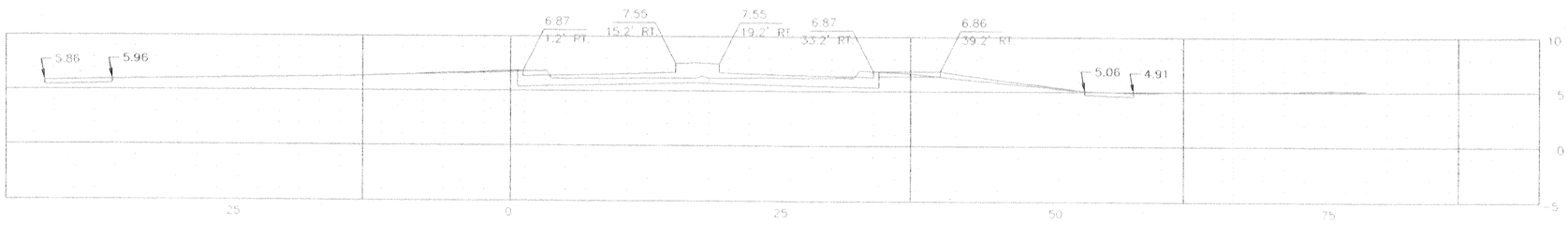

STA 20+75

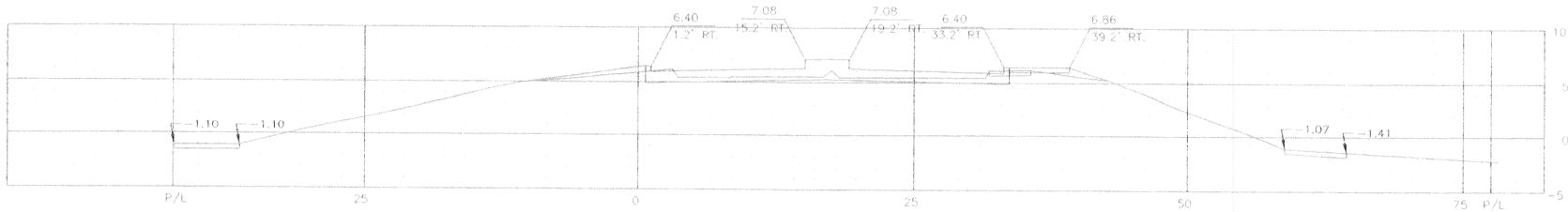

STA 20+50

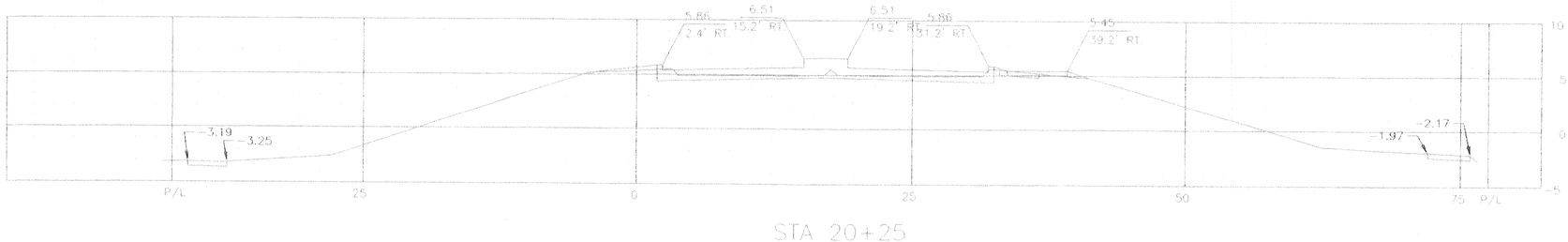

STA 20+25

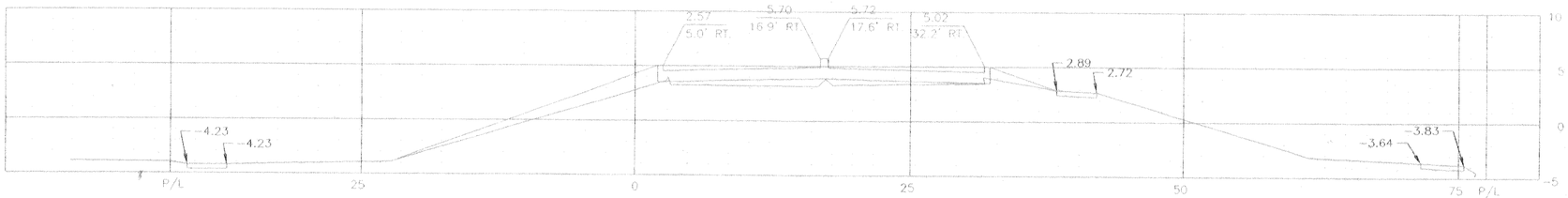

STA 20+00

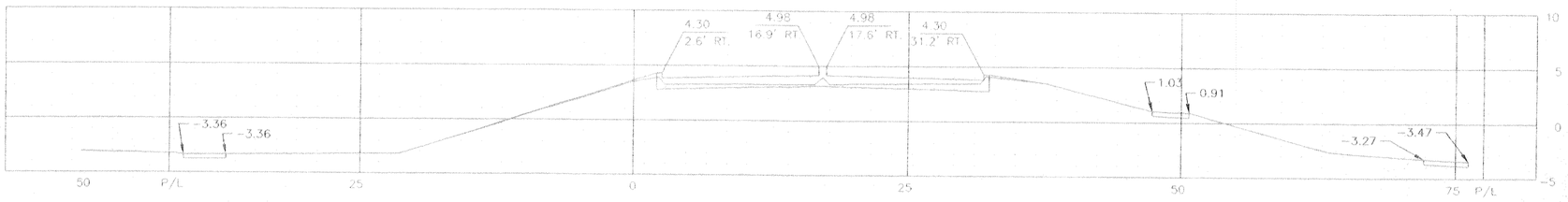

STA 19+75

Safety is a Part of Your Contract

SCALE: 1" = 10'- 0"

10' 5' 0 10' 20' 30' 40' 50'

SYMBOL	DESCRIPTION	DATE	APPROVED

REVISIONS

U.S. ARMY ENGINEER DISTRICT, NEW ORLEANS
CORPS OF ENGINEERS
NEW ORLEANS, LOUISIANA

BOARD OF LEVEE COMMISSIONERS
ORLEANS LEVEE DISTRICT
NEW ORLEANS, LOUISIANA

MEYER ENGINEERS, LTD. METAIRIE, LOUISIANA
LAKE PONTCHARTRAIN, LA. AND VICINITY

HIGH LEVEL PLAN

LONDON AVE. OUTFALL CANAL, PARALLEL PROTECTION FLOODPROOFING OF MIRABEAU AVE. & FILMORE AVE. BRIDGE
ORLEANS PARISH, LOUISIANA

FILMORE AVENUE SEALED BRIDGE ROADWAY CROSS SECTIONS

DESIGNED BY: JCS	DATE: 3-12-01	PLOT SCALE: 1"=10'	PLOT DATE: 6-27-01
DRAWN BY: BMS	CADD FILE: 93626B2B		FILE NO. H-4-44674
CHECKED BY: JCS	SOLICITATION NO. DACW29-01-B-0092		DWG. 82B OF 97
SUBMITTED BY: MEYER ENGINEERS, LTD. DESIGN ENGINEER			

VALUE ENGINEERING INCENTIVE CLAUSES — YOUR KEY TO HIGHER PROFITS

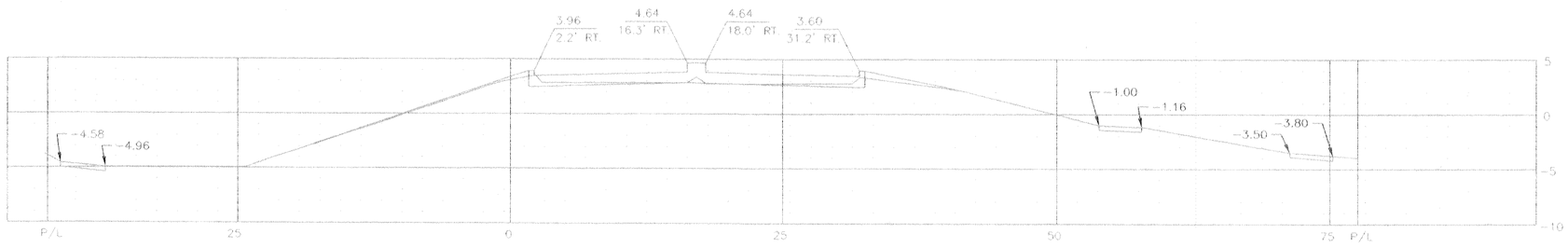

STA 23+50

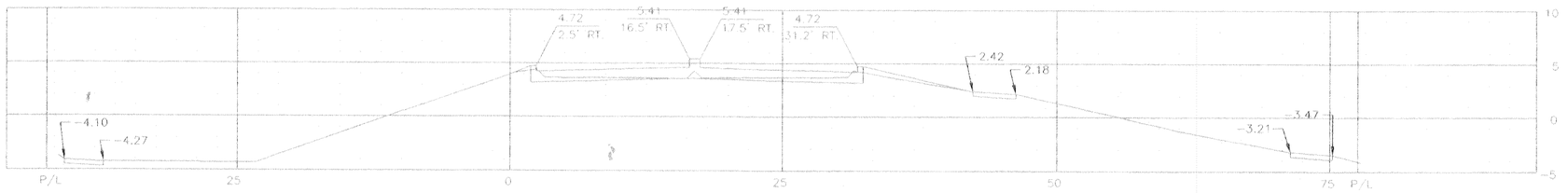

STA 23+25

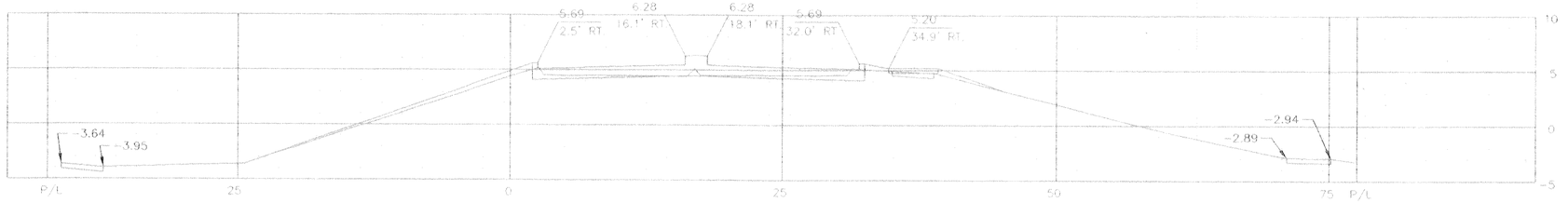

STA 23+00

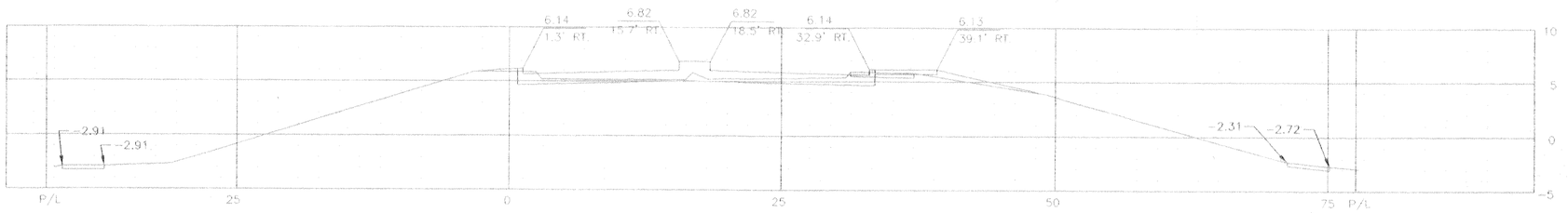

STA 22+75

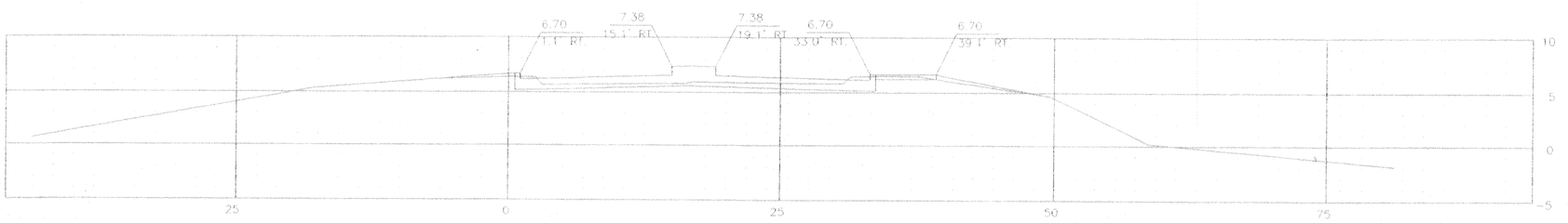

STA 22+50

Safety is a Part of Your Contract

SCALE: 1" = 10'-0"

10' 5' 0 10' 20' 30' 40' 50'

SYMBOL	DESCRIPTION	DATE	APPROVED
	REVISIONS		

U.S. ARMY ENGINEER DISTRICT, NEW ORLEANS
CORPS OF ENGINEERS
NEW ORLEANS, LOUISIANA

BOARD OF LEVEE COMMISSIONERS
ORLEANS LEVEE DISTRICT
NEW ORLEANS, LOUISIANA

MEYER ENGINEERS, LTD. METAIRIE, LOUISIANA
LAKE PONTCHARTRAIN, LA. AND VICINITY

HIGH LEVEL PLAN

LONDON AVE. OUTFALL CANAL, PARALLEL PROTECTION FLOODPROOFING OF MIRABEAU AVE. & FILMORE AVE. BRIDGE
ORLEANS PARISH, LOUISIANA

FILMORE AVENUE SEALED BRIDGE ROADWAY CROSS SECTIONS

DESIGNED BY: JCS DRAWN BY: BMS CHECKED BY: JCS	DATE: 3-12-01	PLOT SCALE: 1"=10'	PLOT DATE: 6-27-01
	CADD FILE: 9362820		FILE NO. H-4-44674
SUBMITTED BY: MEYER ENGINEERS, LTD. DESIGN ENGINEER	SOLICITATION NO. DACW29-01-B-0092		DWG. 82C OF 97

VALUE ENGINEERING INCENTIVE CLAUSES YOUR KEY TO HIGHER PROFITS

Safety is a Part of Your Contract

FILMORE AVENUE

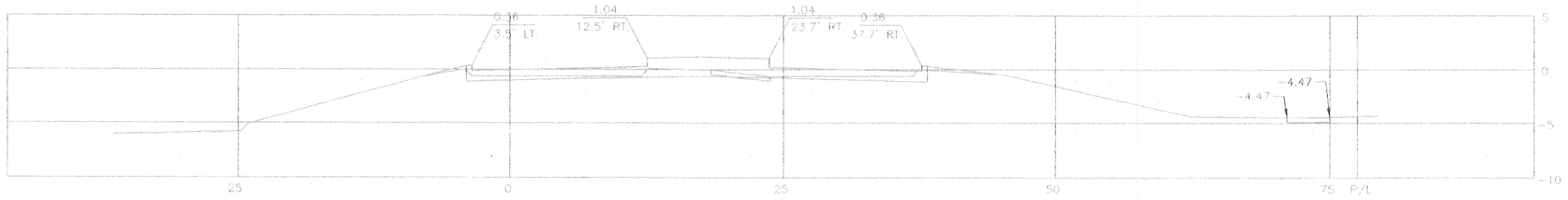

STA 24+25

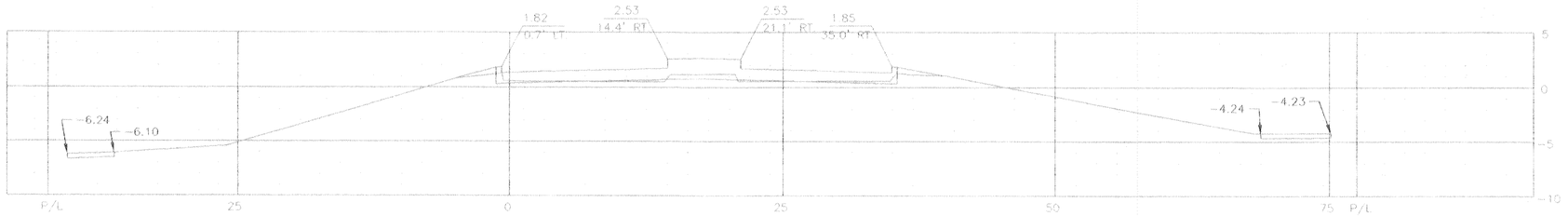

STA 24+00

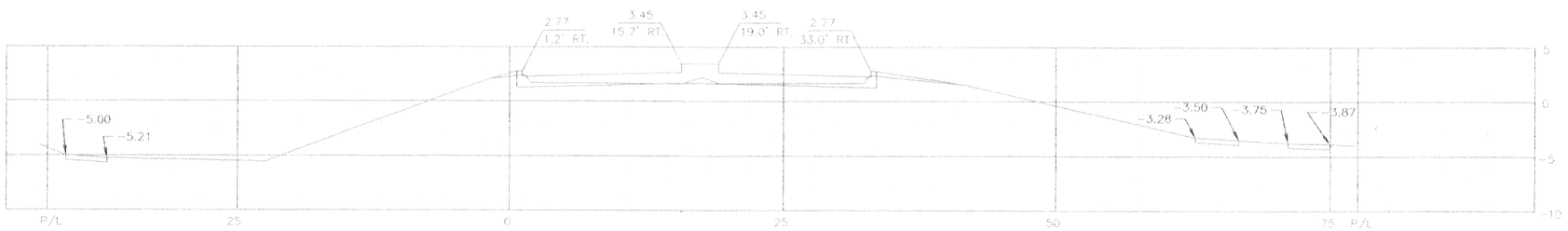

STA 23+75

SCALE: 1" = 10'- 0"

10' 5' 0 10' 20' 30' 40' 50'

SYMBOL	DESCRIPTION	DATE	APPROVED

REVISIONS

U.S. ARMY ENGINEER DISTRICT, NEW ORLEANS
CORPS OF ENGINEERS
NEW ORLEANS, LOUISIANA

BOARD OF LEVEE COMMISSIONERS
ORLEANS LEVEE DISTRICT
NEW ORLEANS, LOUISIANA

MEYER ENGINEERS, LTD. METAIRIE, LOUISIANA
LAKE PONTCHARTRAIN, LA. AND VICINITY
HIGH LEVEL PLAN

LONDON AVE. OUTFALL CANAL, PARALLEL PROTECTION FLOODPROOFING OF MIRABEAU AVE. & FILMORE AVE. BRIDGE
ORLEANS PARISH, LOUISIANA

FILMORE AVENUE SEALED BRIDGE ROADWAY CROSS SECTIONS

DESIGNED BY: JCS DRAWN BY: BMS CHECKED BY: JCS	DATE: 3-12-01	PLOT SCALE: 1"=10'	PLOT DATE: 6-27-01
	CADD FILE: 9362b82C		FILE NO. H-4-44674
SUBMITTED BY: MEYER ENGINEERS, LTD. DESIGN ENGINEER	SOLICITATION NO. DACW29-01-B-0092		DWG. 82D OF 97

VALUE ENGINEERING INCENTIVE CLAUSES YOUR KEY TO HIGHER PROFITS

C·A·D

Safety is a Part of Your Contract

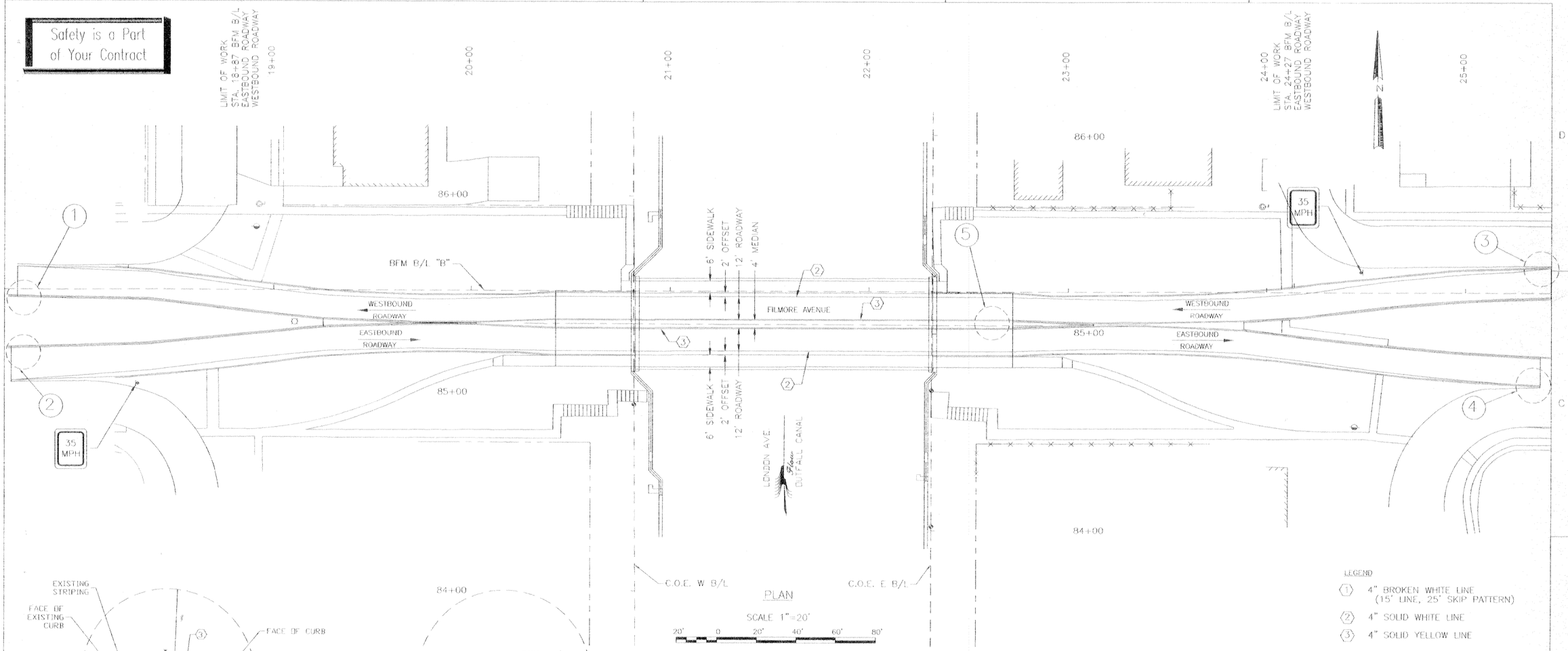

PLAN

SCALE 1"=20'

20' 0 20' 40' 60' 80'

LEGEND

(1) 4" BROKEN WHITE LINE (15' LINE, 25' SKIP PATTERN)

(2) 4" SOLID WHITE LINE

(3) 4" SOLID YELLOW LINE

NOTES:
1. ALL PAVEMENT MARKINGS SHALL BE INSTALLED AS PER THE MANUAL ON UNIFORM TRAFFIC CONTROL DEVICES.

2. ALL PAVEMENT MARKINGS SHALL BE PREFORMED PLASTIC.

REFERENCE DRAWINGS
FOR GENERAL NOTES, SEE DWG. 4
FOR PLAN/PROFILE, SEE DWG. 47

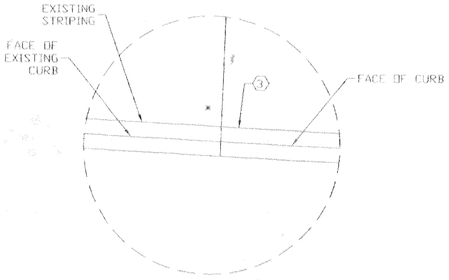

SECTION (1)
SCALE: 1" = 10' - 0"
* MATCH EXISTING STRIPING

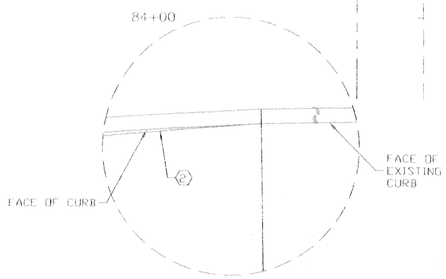

SECTION (3)
SCALE: 1" = 10' - 0"

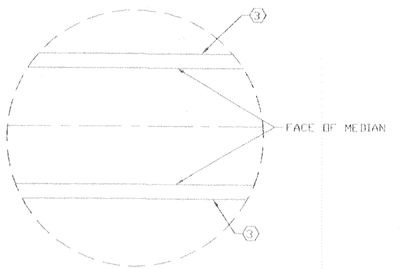

SECTION (5)
SCALE: 1" = 10' - 0"
* MATCH EXISTING STRIPING

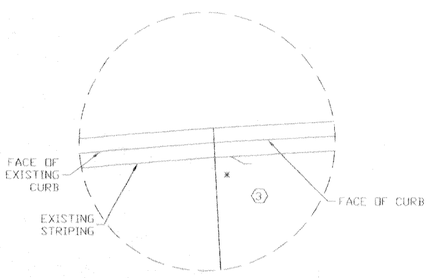

SECTION (2)
SCALE: 1" = 10' - 0"
* MATCH EXISTING STRIPING

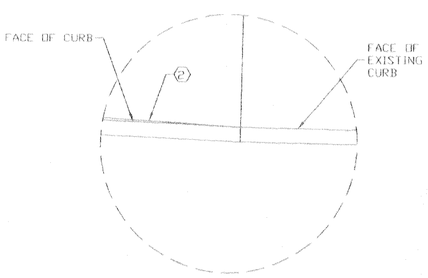

SECTION (4)
SCALE: 1" = 10' - 0"

VALUE INCENTIVE CLAUSES ENGINEERING — YOUR KEY TO HIGHER PROFITS

C-A-D

SYMBOL	DESCRIPTION	DATE	APPROVED
	REVISIONS		

U.S. ARMY ENGINEER DISTRICT, NEW ORLEANS
CORPS OF ENGINEERS
NEW ORLEANS, LOUISIANA

BOARD OF LEVEE COMMISSIONERS
ORLEANS LEVEE DISTRICT
NEW ORLEANS, LOUISIANA

MEYER ENGINEERS, LTD. METAIRIE, LOUISIANA

LAKE PONTCHARTRAIN, LA. AND VICINITY
HIGH LEVEL PLAN
LONDON AVE. OUTFALL CANAL, PARALLEL PROTECTION FLOODPROOFING OF FILMORE AVE. & MIRABEAU AVE. BRIDGES
ORLEANS PARISH, LOUISIANA

FILMORE AVENUE SEALED BRIDGE PERMANENT PAVEMENT MARKINGS

DESIGNED BY: JCS	DATE: 3-12-01	PLOT SCALE: 1"=20'	PLOT DATE: 6-27-01
DRAWN BY: MJF			
CHECKED BY: RCM	CADD FILE: 93620B3		FILE NO. H-4-4461
SUBMITTED BY: MEYER ENGINEERS, LTD. DESIGN ENGINEER	SOLICITATION NO. DACW29-01-B-0092		DWG. 83 OF 97

Safety is a Part of Your Contract

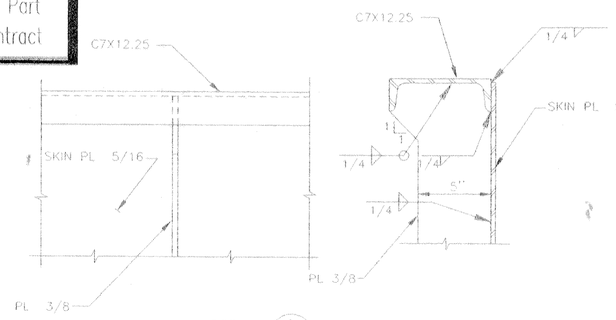

DETAIL 1 (26/84/66)

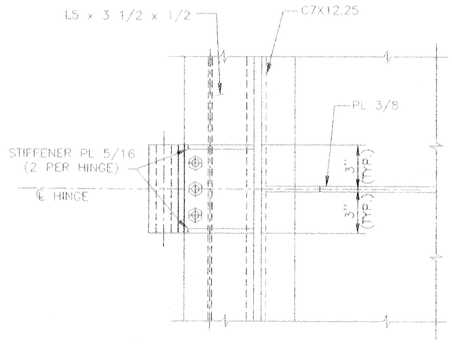

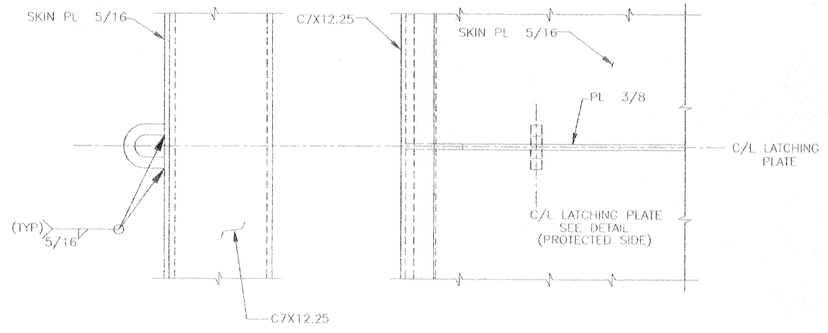

END VIEW

FLOOD SIDE ELEVATION

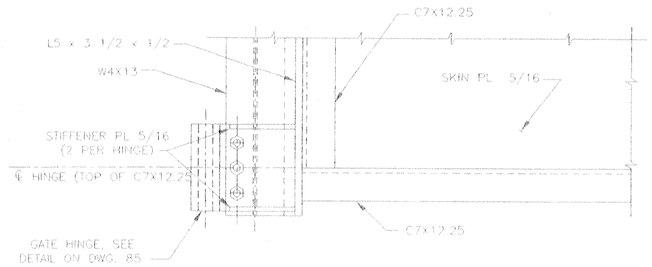

PROTECTED SIDE

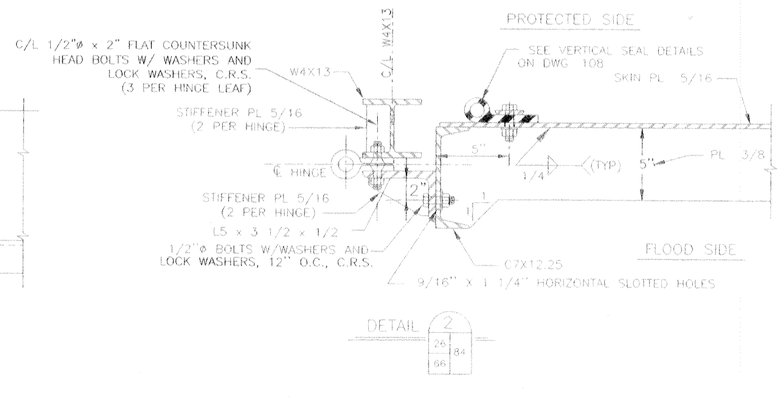

DETAIL 2 (26/84/66)

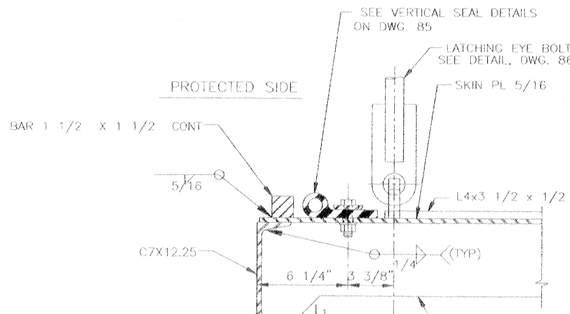

DETAIL 3 (26/84/66)

C/L LATCHING PLATE
SEE DETAIL

FLOOD SIDE

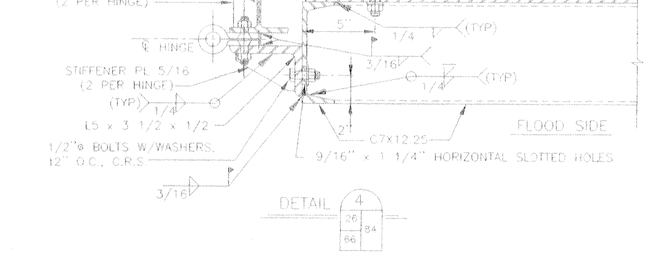

DETAIL 4 (26/84/66)

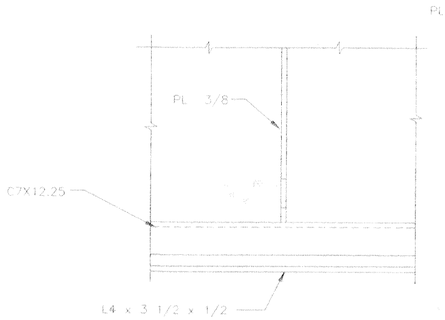

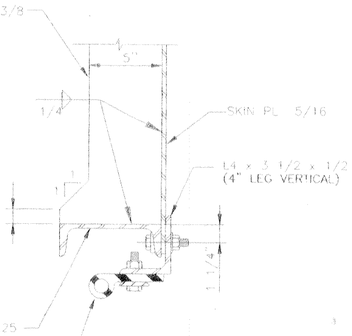

NOTE:
SEAL ASSEMBLY SHOWN IN SOME
VIEWS FOR ORIENTATION ONLY.

DETAIL 6 (26/84/66)

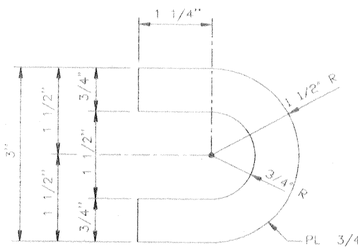

LATCHING PLATE

SCALE: 12" = 1' - 0"

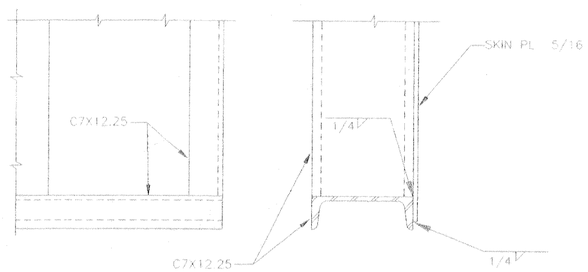

DETAIL 5 (26/84/66)

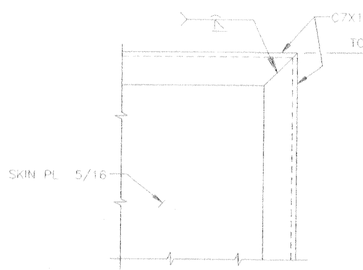

DETAIL 7 (26/84/66)

SCALE: 12" = 1' - 0"

6" 3" 0

SCALE: 3" = 1' - 0

12" 0 1'

C·A·D

VALUE ENGINEERING CLAUSES YOUR KEY TO HIGHER PROFITS

SYMBOL	DESCRIPTION	DATE	APPROVED

REVISIONS

U.S. ARMY ENGINEER DISTRICT, NEW ORLEANS
CORPS OF ENGINEERS
NEW ORLEANS, LOUISIANA

BOARD OF LEVEE COMMISSIONERS
ORLEANS LEVEE DISTRICT
NEW ORLEANS, LOUISIANA

MEYER ENGINEERS, LTD. METAIRIE, LOUISIANA
LAKE PONTCHARTRAIN, LA. AND VICINITY
HIGH LEVEL PLAN

LONDON AVE. OUTFALL CANAL, PARALLEL PROTECTION FLOODPROOFING OF MIRABEAU AVE. & FILMORE BRIDGES
ORLEANS PARISH, LOUISIANA

PEDESTRIAN GATE DETAILS

DESIGNED BY: JCS	DATE: 3-12-01	PLOT SCALE: 1" = 4"	PLOT DATE: 6-27-01
DRAWN BY: MJF			
CHECKED BY: JCS	CADD FILE: 9382684		FILE NO. H-4-44674
SUBMITTED BY: MEYER ENGINEERS, LTD. DESIGN ENGINEER	SOLICITATION NO. DACW29-X		DWG. 84 OF 97

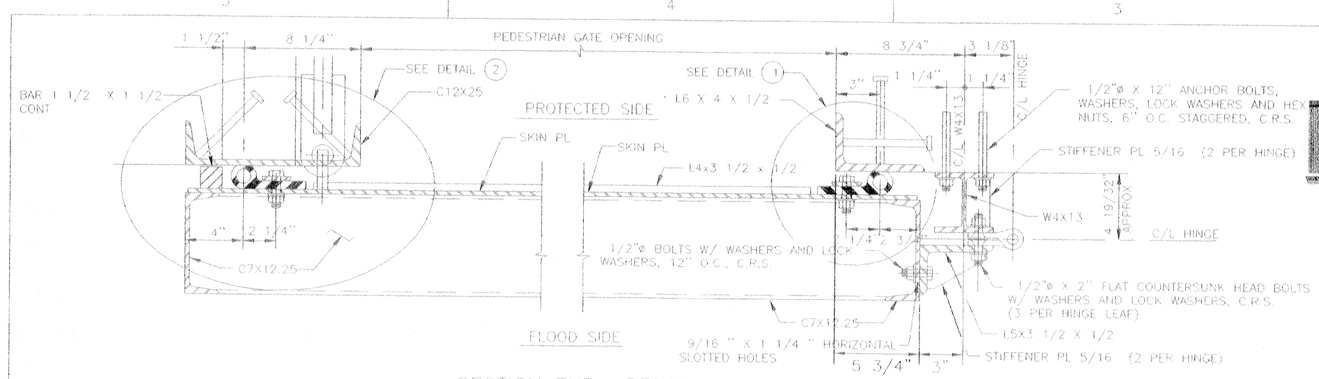

SECTION THRU PEDESTRIAN GATE

SCALE: 3" = 1' - 0"

GATE HINGE:
PRISON TYPE, FULL MORTISE, SWAGED STEEL WITH STEEL PIN, ITEM NO. 88852 AS MFD. BY STANLEY OR EQUAL (3 EACH)

Safety is a Part of Your Contract

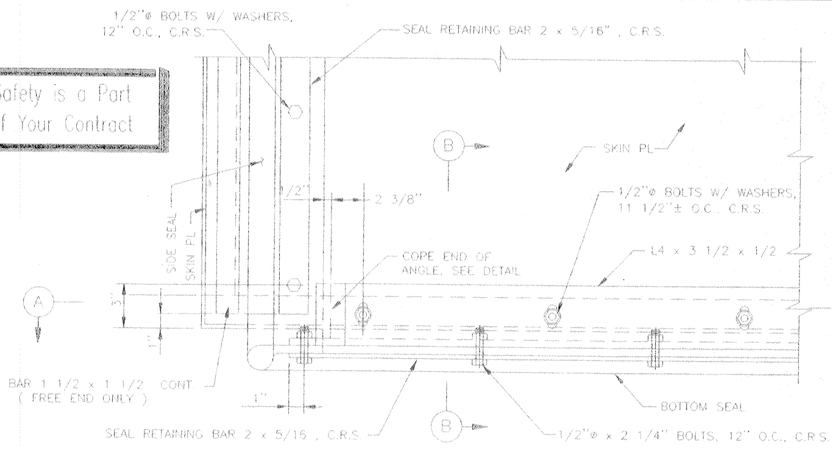

END ELEVATION - PROTECTED SIDE

SCALE: 3" = 1' - 0"

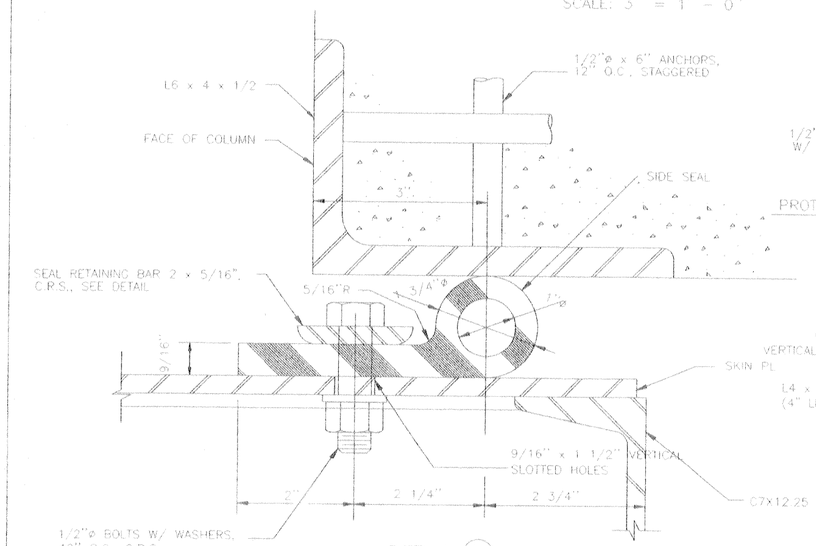

DETAIL (1)

SCALE: 12" = 1' - 0"

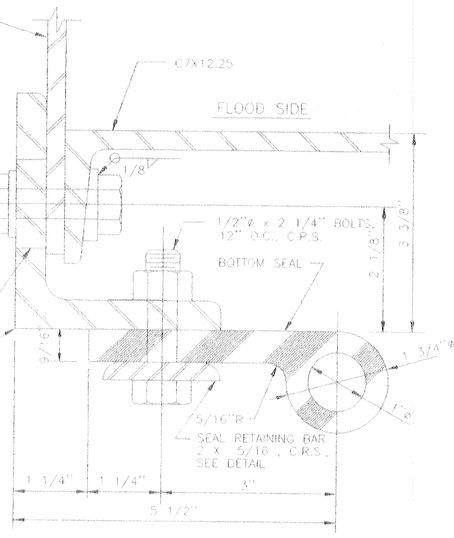

SECTION (B)

SCALE: 12" = 1' - 0"

NOTE: SEAL SET FOR 1/8" DEFLECTION

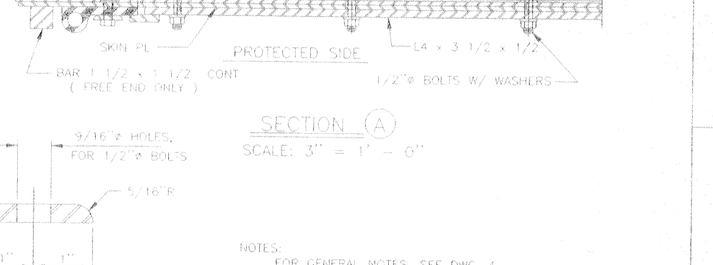

SECTION (A)

SCALE: 3" = 1' - 0"

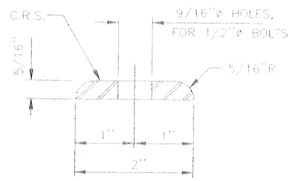

SEAL RETAINING BAR

SCALE: 12" = 1' - 0"

NOTES:
1. FOR GENERAL NOTES, SEE DWG. 4.
2. ALL SPLICES WILL BE FACTORY MADE IN HEAVY STEEL PRESS TYPE MOLDS UNDER PRESSURE AND HEAT.
3. ALL SPLICE JOINTS MUST DEVELOP STRENGTH OF AT LEAST 50% OF THE MINIMUM TENSILE STRENGTH REQUIRED OF THE RUBBER.
4. SEAL CLAMP ANGLES SHALL BE PAINTED ON ALL SIDES PRIOR TO ASSEMBLY.
5. AFTER ASSEMBLY AND SEAL ADJUSTMENTS ARE MADE, ALL CAPS IN SEALS AND SEAL SUPPORTS SHALL BE SEALED WITH A SILICONE RUBBER SEALANT TO PROVIDE WATERTIGHT JOINTS.

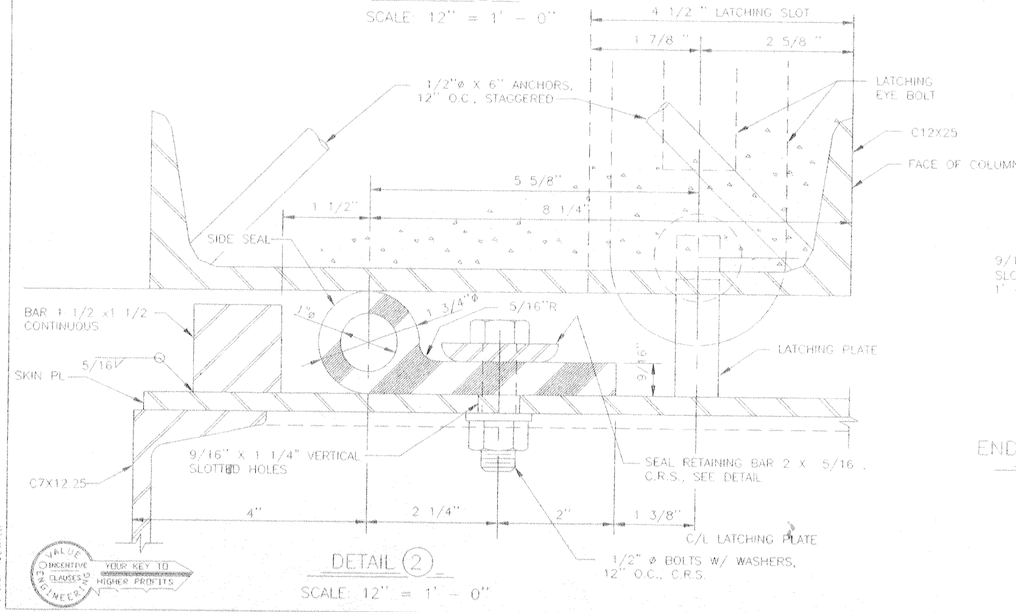

DETAIL (2)

SCALE: 12" = 1' - 0"

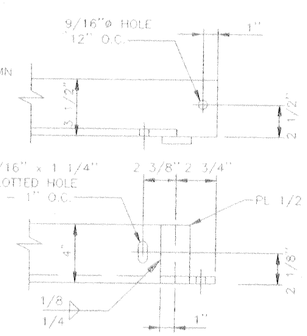

END OF L 4 X 3 1/2 X 1/2

SCALE: 3" = 1' - 0"

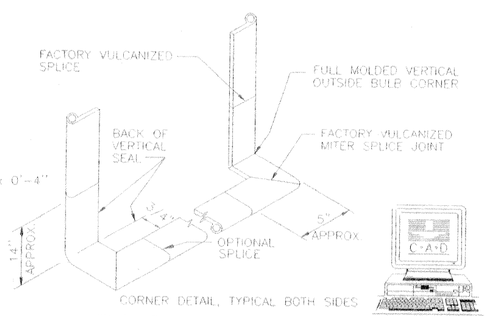

CORNER DETAIL, TYPICAL BOTH SIDES

FLOODWALL GATE SEAL

NOT TO SCALE

SCALE: 3" = 1' - 0"

12" 0" 1'

SCALE: 12" = 1' - 0"

6" 3" 0"

SYMBOL	DESCRIPTION	DATE	APPROVED
	REVISIONS		

U.S. ARMY ENGINEER DISTRICT, NEW ORLEANS
CORPS OF ENGINEERS
NEW ORLEANS, LOUISIANA

BOARD OF LEVEE COMMISSIONERS
ORLEANS LEVEE DISTRICT
NEW ORLEANS, LOUISIANA

MEYER ENGINEERS, LTD. METAIRIE, LOUISIANA
LAKE PONTCHARTRAIN, LA. AND VICINITY
HIGH LEVEL PLAN

LONDON AVE. OUTFALL CANAL, PARALLEL PROTECTION FLOODPROOFING OF MIRABEAU AVE. & FILMORE AVE. BRIDGES
ORLEANS PARISH, LOUISIANA

PEDESTRIAN GATE SEAL DETAILS

DESIGNED BY: JCS	DATE: 3-12-01	PLOT SCALE: 1"=4"	PLOT DATE: 6-27-01
DRAWN BY: MJF			
CHECKED BY: JCS	CADD FILE: 9362b85		FILE NO. H-4-44674
SUBMITTED BY: MEYER ENGINEERS, LTD DESIGN ENGINEER	SOLICITATION NO. DACW29-01-B-0092		DWG. 85 OF 97

PLAN FOR ENGINEER
INCENTIVE CLAUSES
YOUR KEY TO HIGHER PROFITS

Safety is a Part of Your Contract

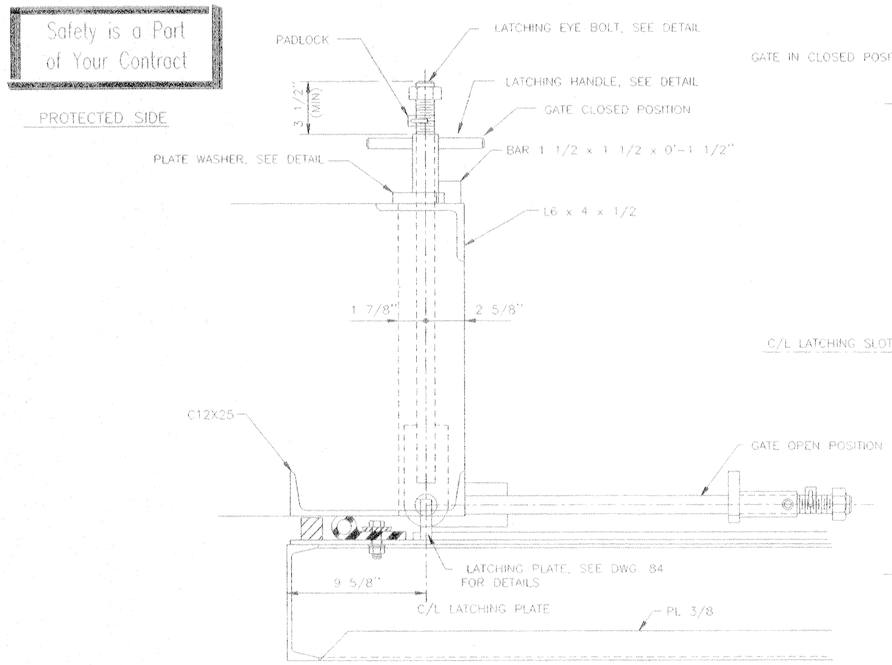

PLAN

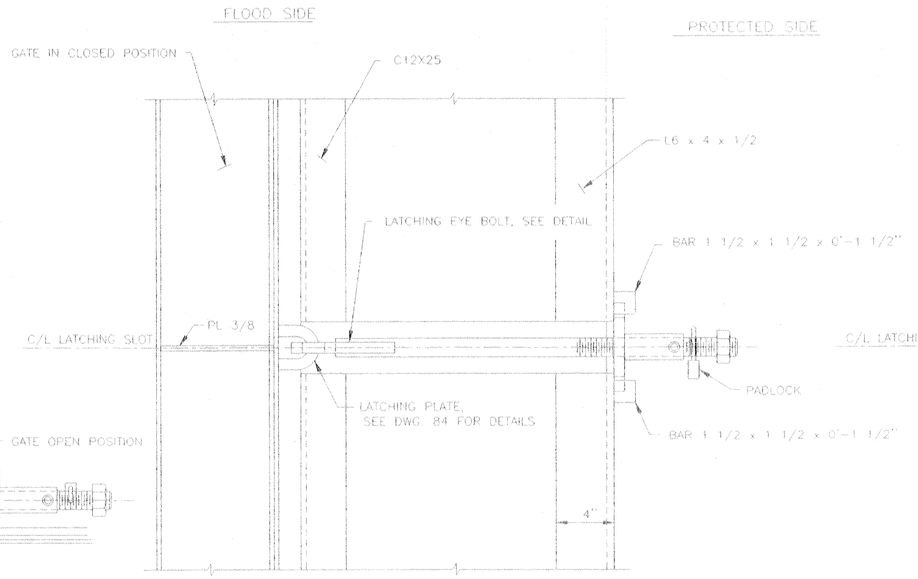

SECTION AT C/L LATCHING DEVICE

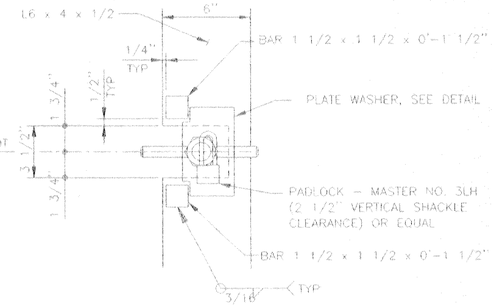

PROTECTED SIDE ELEVATION

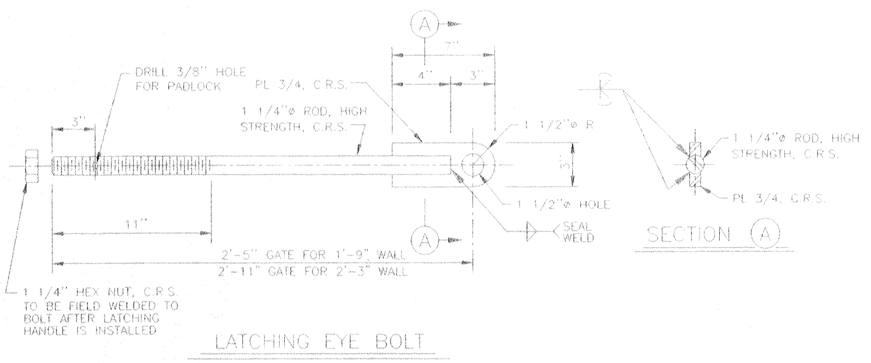

LATCHING EYE BOLT

SCALE: 3" = 1'-0"

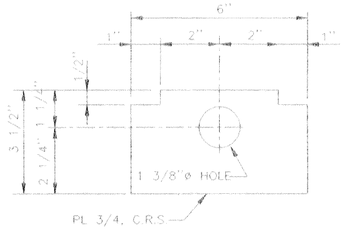

PLATE WASHER

SCALE: 6" = 1'-0"

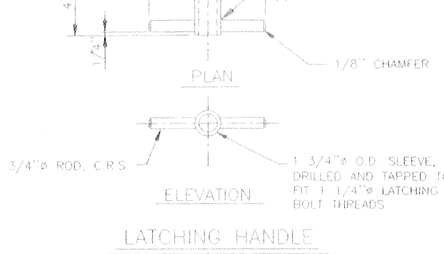

LATCHING HANDLE

SCALE: 3" = 1'-0"

LATCHING DEVICE

SCALE: 3" = 1'-0"

REFERENCE DRAWINGS

FOR GENERAL NOTES, SEE DWG. 4.
FOR FILMORE PLAN AND PROFILE, SEE DWG. 47
FOR MIRABEAU PLAN AND PROFILE, SEE DWG. 7

SCALE: 3" = 1'-0"

12" 0 1'

SCALE: 6" = 1'-0"

6" 0 6"

VALUE ENGINEERING OBJECTIVE — YOUR KEY TO CLASSES TO HIGHER PROFITS

SYMBOL	DESCRIPTION	DATE	APPROVED
	REVISIONS		

U.S. ARMY ENGINEER DISTRICT, NEW ORLEANS
CORPS OF ENGINEERS
NEW ORLEANS, LOUISIANA

BOARD OF LEVEE COMMISSIONERS
ORLEANS LEVEE DISTRICT
NEW ORLEANS, LOUISIANA

MEYER ENGINEERS, LTD. METAIRIE, LOUISIANA

LAKE PONTCHARTRAIN, LA. AND VICINITY
HIGH LEVEL PLAN

LONDON AVE. OUTFALL CANAL, PARALLEL PROTECTION FLOODPROOFING OF MIRABEAU AVE. & FILMORE AVE. BRIDGES
ORLEANS PARISH, LOUISIANA

PEDESTRIAN GATE LATCHING DETAILS

DESIGNED BY: JCS	DATE: 3-12-01	PLOT SCALE: 1"=4'	PLOT DATE: 6-27-01
DRAWN BY: MJF			
CHECKED BY: JCS	CADD FILE: 9362b86		FILE NO. H-4-44674
SUBMITTED BY: MEYER ENGINEERS, LTD. DESIGN ENGINEER	SOLICITATION NO. DACW29-01-B-0092		DWG. 86 OF 97

Safety is a Part of Your Contract

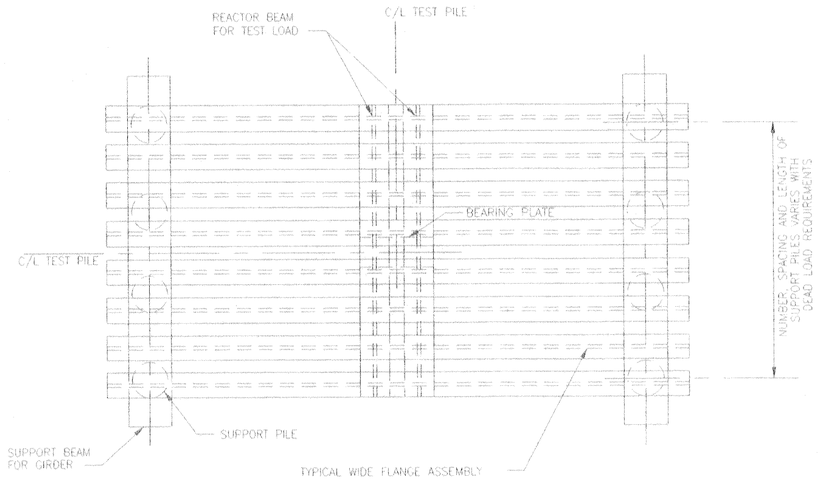

PLAN

MANDATORY LOADING FRAME NOTES:

1. LOADING FRAME SHOWN WITHOUT DEAD LOAD.
2. CONTRACTOR TO PROVIDE PILE LAYOUT FOR EACH PARTICULAR DEAD LOAD TEST.
3. SECURE DEAD WEIGHT LOAD TO LOADING FRAME WITH CHAINS AND BINDERS.
4. DESIGN OF THE LOADING FRAME IS THE RESPONSIBILITY OF THE CONTRACTOR AND MUST BE SUBMITTED TO THE CONTRACTING OFFICER FOR APPROVAL.

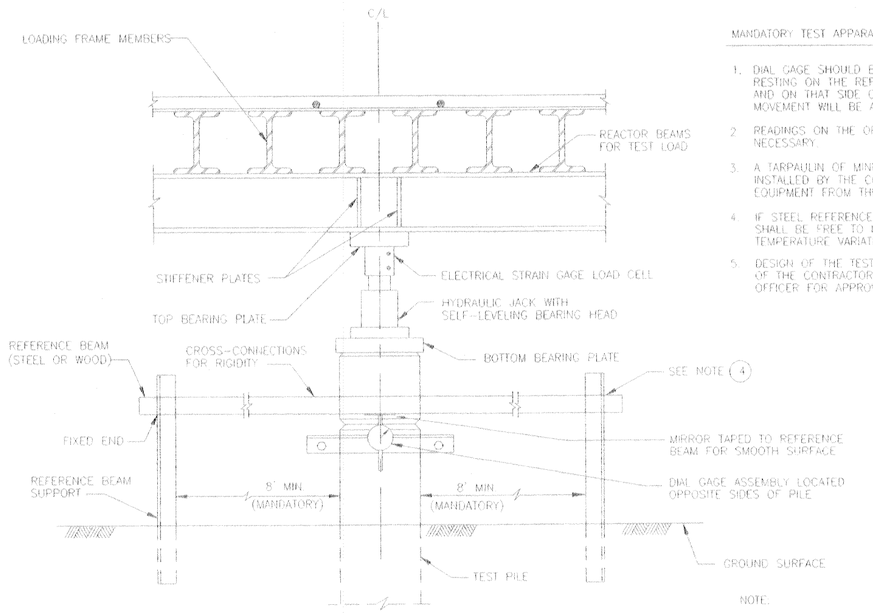

SECTION (B)

TEST APPARATUS

SCALE: 1" = 1'- 0"

MANDATORY TEST APPARATUS NOTES:

1. DIAL GAGE SHOULD BE ATTACHED TO THE PILE WITH THE STEM RESTING ON THE REFERENCE BEAM IN THE COMPRESSED POSITION AND ON THAT SIDE OF THE REFERENCE BEAM WHERE THE MOVEMENT WILL BE AWAY FROM THE BEAM.
2. READINGS ON THE OPPOSITE SIDES OF THE PILE ARE NECESSARY.
3. A TARPAULIN OF MINIMUM DIMENSION 12' X 12' SHALL BE INSTALLED BY THE CONTRACTOR TO PROTECT THE MEASURING EQUIPMENT FROM THE DIRECT EFFECTS OF THE WEATHER.
4. IF STEEL REFERENCE BEAMS ARE USED, ONE END OF EACH BEAM SHALL BE FREE TO MOVE AS THE LENGTH OF BEAMS CHANGE WITH TEMPERATURE VARIATIONS.
5. DESIGN OF THE TEST APPARATUS PILE SET-UP IS THE RESPONSIBILITY OF THE CONTRACTOR AND MUST BE SUBMITTED TO THE CONTRACTING OFFICER FOR APPROVAL.

NOTE:

THE CONTRACTOR HAS THE OPTION OF USING REACTION PILES IN LIEU OF THE LOADING FRAME. (SEE SPECIFICATIONS)

THE LOADING FRAME AND TEST APPARATUS IS FOR ILLUSTRATION PURPOSES ONLY, UNLESS NOTED MANDATORY.

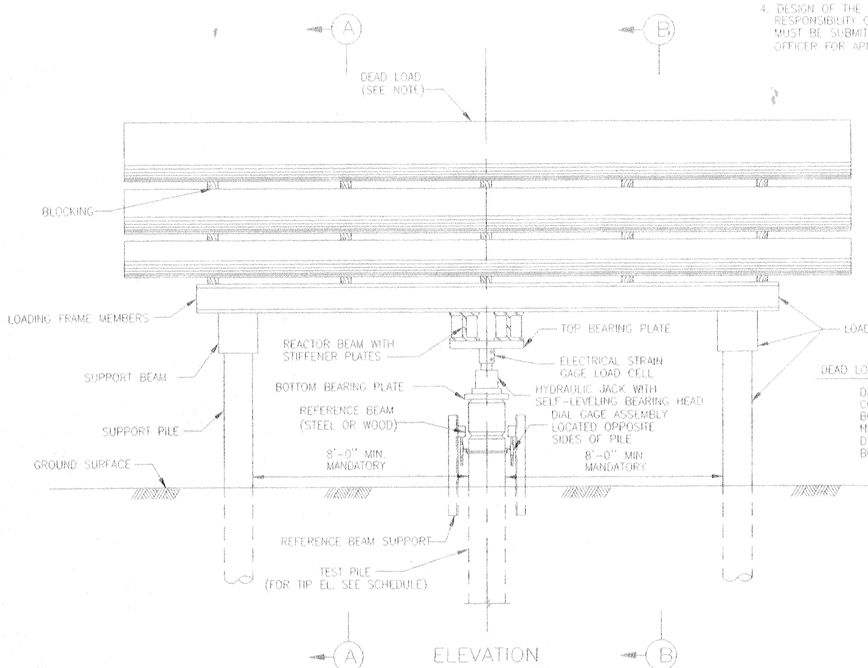

DEAD LOAD NOTES

DEAD LOAD WEIGHT OPTIONAL CONTRACTOR CAN USE WEIGHTED BOX METHOD OR MATERIAL ON HAND THAT WILL RESULT IN REQUIRED DEAD LOAD. (EXAMPLE OF WEIGHTED BOX SHOWN IN SECTION (A))

ELEVATION

LOADING FRAME

SCALE: 1/2 " = 1'- 0"

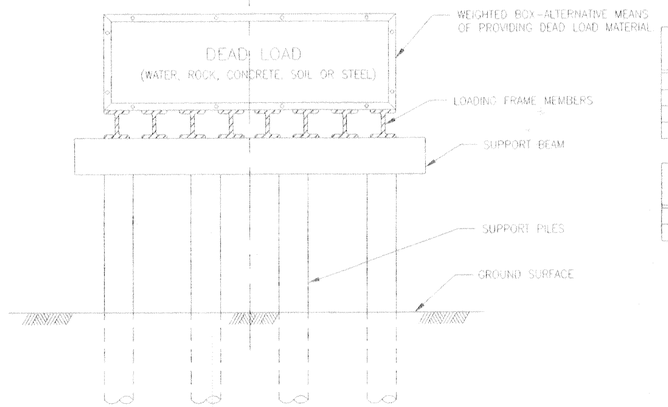

SECTION (A)

SCALE: 1/2 " = 1'- 0"

TEST PILE	FILMORE		
	TYPE OF PILE	SIDE	PILE TIP EL.
TP-1	HP 14x73	EAST	-78.00
TP-2	HP 14x73	WEST	-83.00
TP-3	18"x18" P.C.P.	EAST	-75.5
TP-4	18"x18" P.C.P.	WEST	-83.0

TEST PILE	MIRABEAU		
	TYPE OF PILE	SIDE	PILE TIP EL.
TP-5	18"x18" P.C.P.	EAST	-73.5
TP-6	18"x18" P.C.P.	EAST	-83.5

SERVICE LOAD = 30 TONS

SCALE: 1/2 " = 1'- 0"

0 2' 4' 6' 8'

SCALE: 1" = 1'- 0"

12" 0 1' 2' 3' 4' 5'

SYMBOL	DESCRIPTION	DATE	APPROVED
	REVISIONS		

U.S. ARMY ENGINEER DISTRICT, NEW ORLEANS
CORPS OF ENGINEERS
NEW ORLEANS, LOUISIANA

BOARD OF LEVEE COMMISSIONERS
ORLEANS LEVEE DISTRICT
NEW ORLEANS, LOUISIANA

MEYER ENGINEERS, LTD. METAIRIE, LOUISIANA
LAKE PONTCHARTRAIN, LA. AND VICINITY

HIGH LEVEL PLAN

LONDON AVE. OUTFALL CANAL, PARALLEL PROTECTION FLOODPROOFING OF FILMORE AVE. & MIRABEAU AVE. BRIDGES
ORLEANS PARISH, LOUISIANA

COMPRESSION PILE TEST

DESIGNED BY: JCS	DATE: 3-12-01	PLOT SCALE: 1"=1'	PLOT DATE: 6-27-01
DRAWN BY: MJF			
CHECKED BY: JCS	CADD FILE: 93626B7		FILE NO. H-4-44674
SUBMITTED BY: MEYER ENGINEERS, LTD. DESIGN ENGINEER	SOLICITATION NO. DACW29-01-B-0092		DWG: 87 OF 97

QUALITY IN DESIGN & DRAWING IS OUR KEY TO HIGHER PROFITS

Name of Project: London Avenue Canal, Levee and Floodwall Improvements
Orleans Levee Board Project No. 2049-0269, New Orleans, Louisiana
For: The Board of Levee Commissioners of the Orleans Levee District, New Orleans, La.
Burk & Associates, Inc., New Orleans, Louisiana

Boring No. 15 Soil Technician A. Croal, Jr. Date 17 October 1985
Ground Elev. Datum Gr. Water Depth See Text

Sample No.	Sample Depth — Feet From	To	Depth Stratum Feet From	To	Visual Classification	*Standard Penetration Test	
1	1.7	2.5	0.0	2.5	Medium stiff tan & gray clay w/silt pockets & grass roots		
2	4.7	5.5	2.5	5.5	Medium stiff tan & gray clay w/sand pockets & roots		
3	7.7	8.5	5.5		Soft dark gray clay w/silty sand layers, organic matter & roots		
4	10.7	11.5		12.0	Soft dark gray clay w/organic matter & roots		
5	13.7	14.5	12.0	15.0	Soft gray clay w/roots		
6	15.5	17.0	15.0		Medium dense gray fine sand w/clay pockets & roots	3	20
7	18.0	19.5		20.5	Medium dense gray fine sand w/clay layers	10	14
8	20.5	22.0	20.5		Very dense gray fine sand	50=6"	(Seat)
9	23.5	25.0			Ditto	25	50=8"
10	28.5	30.0			Ditto	20	50=6"
11	33.5	35.0			Very dense gray fine sand w/few shell fragments & trace of silt	18	50=8"
12	38.5	40.0			Very dense gray fine sand	23	50=6"
13	43.5	45.0		46.0	Very dense gray fine sand w/few shell fragments	2	50=10"
14	48.5	50.0	46.0	50.0	Medium dense gray fine sand w/clay pockets & shell fragments	3	12
15	53.2	54.0	50.0		Medium stiff gray clay w/silty sand pockets & few shell fragments		
16	58.2	59.0			Medium stiff gray clay w/few silty sand pockets & few shell fragments		
17	63.2	64.0		66.0	Medium stiff gray clay w/shell fragments		
18	68.2	69.0	66.0	69.0	Stiff gray clay w/shell fragments & trace of sand		
19	69.5	70.0	69.0	70.0	Stiff green clay		

*Number in first column indicates number of blows of 140-lb. hammer dropped 30 in. required to seat 2-in. O.D. splitspoon sampler 6 in. Number in second column indicates number of blows of 140-lb. hammer dropped 30 in. required to drive 2-in. O.D. splitspoon sampler 1 ft. after seating 6 in.

WHILE THIS LOG OF BORING IS CONSIDERED TO BE REPRESENTATIVE OF SUBSURFACE CONDITIONS AT ITS RESPECTIVE LOCATION ON THE DATE SHOWN, IT IS NOT WARRANTED THAT IT IS REPRESENTATIVE OF SUBSURFACE CONDITIONS AT OTHER LOCATIONS AND TIMES.

Remarks:

CLAY SILT SAND HUMUS

Predominant type shown heavy. Modifying type shown light.

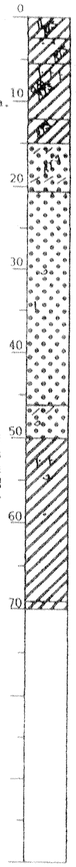

Name of Project: London Avenue Canal, Levee and Floodwall Improvements
Orleans Levee Board Project No. 2049-0269, New Orleans, Louisiana
For: The Board of Levee Commissioners of the Orleans Levee District, New Orleans, La.
Burk & Associates, Inc., New Orleans, Louisiana

Boring No. 18 Soil Technician George Hardee Date 25 October 1985
Ground Elev. Datum Gr. Water Depth See Text

Sample No.	Sample Depth — Feet From	To	Depth Stratum Feet From	To	Visual Classification	*Standard Penetration Test	
1	1.5	2.5	0.0		Very stiff gray clay w/organic matter & sand pockets		
2	5.0	5.5		7.5	Stiff gray clay w/organic matter, sand pockets & shells		
3	8.0	8.5	7.5	9.0	Medium stiff brown & gray clay w/roots & organic matter		
4	10.5	11.5	9.0	12.5	Soft brown & gray clay w/clay pockets, roots & wood		
5	13.5	14.5	12.5		Soft gray clay w/roots & organic matter		
6	16.5	17.5		17.5	Soft gray clay w/sand pockets		
7	17.5	19.0	17.5	20.0	Dense gray fine sand	11	42
8	20.5	22.0	20.0		Medium dense gray fine sand	3	18
9	23.5	25.0		27.0	Ditto	5	25
10	28.5	30.0	27.0		Dense gray fine sand	12	50
11	33.5	35.0			Ditto	16	50
12	38.5	40.0			Ditto	11	30
13	43.5	45.0		46.5	Ditto	5	32
14	48.5	50.0	46.5	50.0	Loose gray fine sand w/clayey sand layers	3	9

*Number in first column indicates number of blows of 140-lb. hammer dropped 30 in. required to seat 2 in. O.D. splitspoon sampler 6 in. Number in second column indicates number of blows of 140-lb. hammer dropped 30 in. required to drive 2 in. O.D. splitspoon sampler 1 ft. after seating 6 in.

WHILE THIS LOG OF BORING IS CONSIDERED TO BE REPRESENTATIVE OF SUBSURFACE CONDITIONS AT ITS RESPECTIVE LOCATION ON THE DATE SHOWN, IT IS NOT WARRANTED THAT IT IS REPRESENTATIVE OF SUBSURFACE CONDITIONS AT OTHER LOCATIONS AND TIMES.

Remarks:

CLAY SILT SAND HUMUS

Predominant type shown heavy. Modifying type shown light.

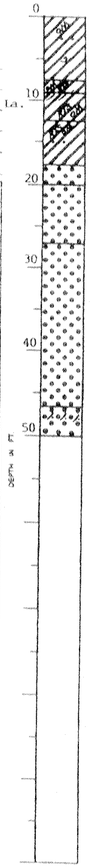

SUMMARY OF LABORATORY TEST RESULTS

BORING 15

Sample No.	Depth In Feet	Classification	Water Content Percent	Density PCF Dry	Density PCF Wet	Unconfined Compressive Strength PSF
1	1.7	Medium stiff gray & tan clay w/silt pockets & roots	43.7	73.9	106.2	1715
2	4.7	Medium stiff gray & tan clay w/sand pockets & roots	54.0	65.2	100.5	1935
3	7.7	Soft dark gray clay w/silty sand layers & roots	53.5	60.1	92.3	590*
4	10.7	Soft dark gray clay w/organic matter & roots	92.9	45.7	88.1	690
5	13.7	Soft gray clay w/roots	70.8	57.2	97.6	630
16	58.2	Medium stiff gray clay w/silty sand pockets & shell fragments	46.1	73.7	107.7	1755
18	68.2	Stiff gray clay w/trace of sand	47.8	73.3	108.3	2570

*Unconsolidated Undrained Triaxial Compression Test - One Specimen; Confined at the approximate overburden pressure.

BORING 18

Sample No.	Depth In Feet	Classification	Water Content Percent	Density PCF Dry	Density PCF Wet	Unconfined Compressive Strength PSF	Atterberg Limits LL	PL	PI
2	5.0	Stiff gray clay w/sand pockets & shells	26.6	90.2	114.1	3240			
3	8.0	Medium stiff brown & gray clay w/organic matter & roots	74.1	42.9	74.8	1710*			
4	10.5	Soft brown & gray clay w/organic matter & many roots	76.4	----	----	----			
5	13.5	Soft gray clay w/roots	58.4	64.1	101.5	755			
6	16.5	Soft gray clay w/sand pockets & organic matter	47.0	72.6	106.8	900	72	23	49

*Unconsolidated Undrained Triaxial Compression Test - One Specimen; Confined at the approximate overburden pressure.

NOTES

1. NUMBER IN FIRST STANDARD PENETRATION TEST COLUMN INDICATES NUMBER OF BLOWS OF 140-LB. HAMMER DROPPED 30 IN. REQUIRED TO SEAT 2-IN. O.D. SPLITSPOON SAMPLER 6 IN. NUMBER IN SECOND COLUMN INDICATES NUMBER OF BLOWS OF 140-LB HAMMER DROPPED 30 IN. REQUIRED TO DRIVE 2 IN. O.D. SPLITSPOON SAMPLER 1 FT. AFTER SEATING 6 IN.
2. BORINGS TAKEN BY EUSTIS ENGINEERING.

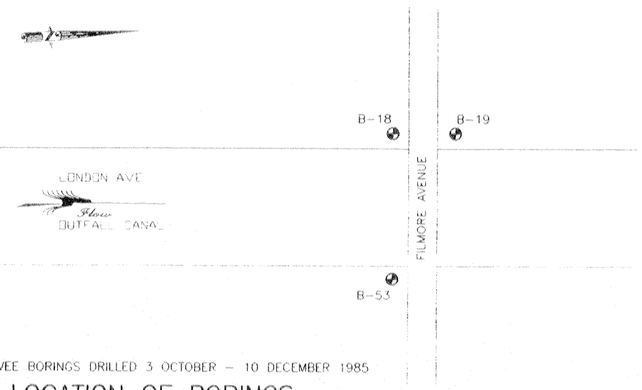

LEVEE BORINGS DRILLED 3 OCTOBER - 10 DECEMBER 1985

LOCATION OF BORINGS

N.T.S.

VALUE ENGINEERING INCENTIVE CLAUSES YOUR KEY TO HIGHER PROFITS

Safety is a Part of Your Contract

SYMBOL	DESCRIPTION	DATE	APPROVED

REVISIONS

U.S. ARMY ENGINEER DISTRICT, NEW ORLEANS
CORPS OF ENGINEERS
NEW ORLEANS, LOUISIANA

BOARD OF LEVEE COMMISSIONERS
ORLEANS LEVEE DISTRICT
NEW ORLEANS, LOUISIANA

MEYER ENGINEERS, LTD. METAIRIE, LOUISIANA
LAKE PONTCHARTRAIN, LA. AND VICINITY

HIGH LEVEL PLAN

LONDON AVE. OUTFALL CANAL, PARALLEL PROTECTION FLOODPROOFING OF FILMORE AVE. & MIRABEAU AVE. BRIDGES
ORLEANS PARISH, LOUISIANA

BORING LOGS

DESIGNED BY: JCS	DATE: 3-12-01	PLOT SCALE: 1"=1'	PLOT DATE: 07/30/01
DRAWN BY: MJF			
CHECKED BY: JCS	CADD FILE: 973268		FILE NO. H-4-44674
SUBMITTED BY: MEYER ENGINEERS, LTD DESIGN ENGINEER	SOLICITATION NO. DACW29-01-B-0092		DWG. 88 OF 97

Survey is a Part of this Contract

Name of Project: London Avenue Canal, Levee and Floodwall Improvements
Orleans Levee Board Project No. 2049-0269, New Orleans, Louisiana

For: The Board of Levee Commissioners of the Orleans Levee District, New Orleans, La.
Burk & Associates, Inc., New Orleans, Louisiana

Boring No. 19 Soil Technician A. J. Mayeux Date 10 October 1985

Ground Elev. _____ Datum _____ Gr. Water Depth See Text

Sample No.	SAMPLE Depth — Feet From	To	DEPTH STRATUM Feet From	To	VISUAL CLASSIFICATION	*STANDARD PENETRATION TEST	
			0.0		Stiff gray & tan clay w/fill		
1	2.0	2.5			Stiff gray & tan clay w/sand pockets & roots		
2	5.0	5.5		7.0	Medium stiff gray & tan clay w/sand lenses, pockets & roots		
3	8.0	8.5	7.0	9.0	Very soft gray clay w/organic clay layers, wood & organic matter		
	11.0	11.5	9.0	12.0	Wood w/organic matter & clay		
4	14.0	14.5	12.0	17.5	Soft gray clay w/some organic matter		
5	17.5	19.0	17.5	19.5	Medium dense gray sand	5	21
6	20.0	21.5	19.5	22.5	Loose gray sand w/clay layers	3	9
7	22.5	24.0	22.5		Medium dense gray sand	3	23
8	25.0	26.5			Ditto	2	24
9	28.5	30.0		33.0	Ditto	6	21
10	33.5	35.0	33.0	37.0	Dense gray sand	13	40
11	38.5	40.0	37.0		Medium dense gray sand w/shell fragments	7	21
12	43.5	45.0		48.0	Ditto	4	22
13	48.5	50.0	48.0	51.0	Very loose gray clayey sand w/shell fragments	2	5
14	53.5	55.0	51.0	56.0	Very loose gray clayey sand w/shell fragments & clay layers	1	3
15	58.5	60.0	56.0		Medium stiff gray clay w/shell fragments & silt lenses	3	7
16	64.0	64.5			Medium stiff gray clay w/trace of sand		
17	69.0	69.5			Stiff gray clay w/sand pockets		
18	74.0	74.5		79.0	Stiff gray clay w/some organic matter & shell fragments		
19	79.0	79.5	79.0	80.0	Medium stiff greenish-gray silty clay w/fine sand		
20	80.0	81.5	80.0		Medium compact greenish-gray sandy silt	6	19
21	82.5	84.0		86.0	Medium compact greenish-gray sandy silt w/clay layers	7	10
22	88.5	90.0	86.0	91.0	Dense gray silty sand	10	42
23	93.5	95.0	91.0	96.0	Medium dense gray silty sand w/clay layers	7	17
24	98.5	100.0	96.0	100.0	Medium stiff gray clay w/sandy silt layers	5	12

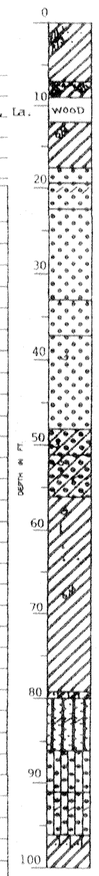

*Number in first column indicates number of blows of 140-lb. hammer dropped 30 in. required to seat 2 in. O. D. splitspoon sampler 6 in. Number in second column indicates number of blows of 140-lb. hammer dropped 30 in. required to drive 2 in. O. D. splitspoon sampler 1 ft. after seating 6 in.

WHILE THIS LOG OF BORING IS CONSIDERED TO BE REPRESENTATIVE OF SUBSURFACE CONDITIONS AT ITS RESPECTIVE LOCATION ON THE DATE SHOWN, IT IS NOT WARRANTED THAT IT IS REPRESENTATIVE OF SUBSURFACE CONDITIONS AT OTHER LOCATIONS AND TIMES.

Remarks: _____

CLAY SILT SAND HUMUS

Predominant type shown heavy. Modifying type shown light.

SUMMARY OF LABORATORY TEST RESULTS

BORING 19

Sample No.	Depth In Feet	Classification	Water Content Percent	Density PCF Dry	Density PCF Wet	Unconfined Compressive Strength PSF
1	2.0	Stiff tan & gray clay w/sand pockets & roots	32.7	84.4	112.0	2050
2	5.0	Medium stiff gray & tan clay w/sand lenses, pockets & roots	32.3	86.7	114.8	1380
3	8.0	Very soft gray clay w/organic clay layers, roots & wood	104.7	42.3	86.5	445
4	14.0	Soft gray clay w/roots	68.3	58.6	98.5	945
16	64.0	Medium stiff gray clay w/trace of sand	51.8	69.3	105.1	1305
17	69.0	Stiff gray clay w/sand pockets	41.7	78.0	110.5	2055
18	74.0	Stiff gray clay w/trace of organic matter & shell fragments	60.1	63.0	100.9	3225
19	79.0	Medium stiff greenish-gray silty clay w/fine sand	21.2	103.5	125.4	1015

SYMBOL	DESCRIPTION	DATE	APPROVED
	REVISIONS		

U.S. ARMY ENGINEER DISTRICT, NEW ORLEANS
CORPS OF ENGINEERS
NEW ORLEANS, LOUISIANA

BOARD OF LEVEE COMMISSIONERS
ORLEANS LEVEE DISTRICT
NEW ORLEANS, LOUISIANA

MEYER ENGINEERS, LTD. METAIRIE, LOUISIANA
LAKE PONTCHARTRAIN, LA. AND VICINITY

HIGH LEVEL PLAN
LONDON AVE. OUTFALL CANAL, PARALLEL PROTECTION FLOODPROOFING OF FILMORE AVE. & MIRABEAU AVE. BRIDGES
ORLEANS PARISH, LOUISIANA

BORING LOGS

DESIGNED BY: JCS	DATE: 3-12-01	PLOT SCALE: 1"=1'	PLOT DATE: 07/30/01
DRAWN BY: MJT	GRID FILE: 3362b89		FILE NO. H-4-44674
CHECKED BY: JCS	SOLICITATION NO. DACW29-01-B-0092		DWG. 89 OF 97
SUBMITTED BY: MEYER ENGINEERS, LTD. DESIGN ENGINEER			

VA-UE INCENTIVE CLAUSES YOUR KEY TO HIGHER PROFITS

Name of Project: London Avenue Canal, Levee and Floodwall Improvements
Orleans Levee Board Project No. 2049-0269, New Orleans, Louisiana
For: The Board of Levee Commissioners of the Orleans Levee District, New Orleans, La.
Burk & Associates, Inc., New Orleans, Louisiana
Boring No. 50 Soil Technician A. Croal, Jr. Date 13 November 1985
Ground Elev. ____ Datum ____ Gr. Water Depth See Text

Sample No.	Sample Depth — Feet From	To	Depth Stratum Feet From	To	Visual Classification	*Standard Penetration Test	
1	0.0	0.5	0.0	1.0	Very stiff gray & brown clay w/fine sand lenses, pockets & shell fragments		
2	1.7	2.5	1.0	3.0	Loose tan fine sand		
3	2.5	4.0	3.0	5.0	Medium compact brown & gray clayey silt w/fine sand lenses	3	14
4	5.0	6.5	5.0	6.5	Medium stiff to stiff gray clay w/sandy silt lenses & layers	2	8
5	8.2	9.0	6.5	9.0	Soft dark gray clay w/silt pockets & trace of organic matter		
6	10.7	11.5	9.0	12.5	Soft dark gray clay w/organic matter & roots		
7	13.7	14.5	12.5		Very soft gray clay w/organic matter & wood		
8	18.2	19.0		21.8	Soft gray clay w/organic matter & roots		
9	21.7	22.5	21.8		Loose to medium dense gray fine sand		
10	22.5	24.0			Medium dense gray fine sand	4	26
11	25.0	26.5			Ditto	4	23
12	27.5	29.0			Ditto	3	19
13	30.0	31.5		34.0	Ditto	8	25
14	33.5	35.0	34.0	39.0	Dense gray fine sand w/shell fragments	9	32
15	38.5	40.0	39.0	41.0	Very dense gray fine sand	12	50=11"
16	43.5	45.0	41.0		Medium dense gray silty sand w/few shell fragments	6	26
17	48.5	50.0		53.5	Medium dense gray silty sand	5	27
18	53.5	55.0	53.5	57.5	Loose gray silty sand	3	10
19	58.5	60.0	57.5	60.0	Soft gray clay w/shell fragments	2	4
20	63.2	64.0	60.0	66.0	Medium stiff gray fissured clay w/sand pockets & few shell fragments & vertical fissures.		
21	68.2	69.0	66.0	73.0	Stiff gray clay w/few shell fragments		
22	73.2	74.0	73.0	75.0	Stiff greenish-gray clay w/silt pockets & shells		
23	76.7	77.5	75.0	77.5	Very stiff greenish-gray & tan clay w/few silt pockets		
24	77.5	79.0	77.5		Compact gray sandy silt	9	44
25	80.0	81.5			Ditto	8	35
26	82.5	84.0		84.5	Medium compact gray sandy silt	6	21
27	85.0	86.5	84.5	87.0	Very loose gray sandy silt w/clay layers	2	2
28	88.5	90.0	87.0		Medium stiff gray clay w/clayey silt lenses & layers	2	6
29	91.7	92.5			Medium stiff gray clay w/sandy silt layers		
30	96.7	97.5	Tcl	100.0	Stiff gray clay w/silt lenses		

*Number in first column indicates number of blows of 140 lb. hammer dropped 30 in. required to seat 2-in. O.D. splitspoon sampler 6 in. Number in second column indicates number of blows of 140 lb. hammer dropped 30 in. required to drive 2-in. O.D. splitspoon sampler 1 ft. after seating 6 in.

WHILE THIS LOG OF BORING IS CONSIDERED TO BE REPRESENTATIVE OF SUBSURFACE CONDITIONS AT ITS RESPECTIVE LOCATION ON THE DATE SHOWN, IT IS NOT WARRANTED THAT IT IS REPRESENTATIVE OF SUBSURFACE CONDITIONS AT OTHER LOCATIONS AND TIMES.

Remarks: ____

CLAY SILT SAND HUMUS

Predominant type shown heavy. Modifying type shown light.

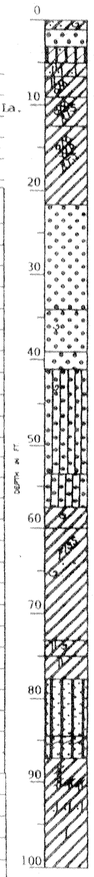

SUMMARY OF LABORATORY TEST RESULTS

BORING 50

Sample No.	Depth in Feet	Classification	Water Content Percent	Density PCF Dry	Density PCF Wet	Unconfined Compressive Strength PSF	Atterberg Limits LL	PL	PI
5	8.2	Soft dark gray clay w/silt pockets & organic matter	51.6	64.1	97.2	805			
6	10.7	Soft dark gray clay w/much organic matter & roots	104.2	41.7	85.2	700	161	45	116
7	13.7	Very soft gray clay w/organic matter & wood	80.7	----	----	----			
8	18.2	Soft gray clay w/trace of organic matter	84.3	50.6	93.2	580			
20	63.2	Medium stiff gray fissured clay w/sand pockets & partings	44.6	72.7	105.2	1545			
21	68.2	Stiff gray clay w/shell fragments	44.5	75.3	108.8	2430	80	25	55
22	73.2	Stiff greenish-gray clay w/silt pockets & shell fragments	31.6	87.7	115.5	2300			
23	76.7	Stiff greenish-gray & tan clay w/silt pockets	28.8	89.3	115.1	2500	71	22	49
29	91.7	Medium stiff gray clay w/sandy silt layers	46.0	75.8	110.6	1625	74	23	51
30	96.7	Stiff gray clay w/silt lenses	37.9	83.6	115.3	2800			

BORING 53

Sample No.	Depth in Feet	Classification	Water Content Percent	Density PCF Dry	Density PCF Wet	Unconfined Compressive Strength PSF
1	2.0	Medium stiff gray & tan clay w/sand lenses, pockets & trace of organic matter	35.3	82.3	111.4	1545*
2	5.5	Medium stiff gray & tan clay w/sand pockets	42.2	74.0	105.3	1510
3	8.0	Medium stiff gray & tan clay w/vertical sand layers, organic matter & brick	44.4	----	----	----
4	14.0	Soft gray & tan clay w/decayed roots	87.0	----	----	----
15	59.0	Stiff gray & tan clay w/sand pockets & shell fragments	45.2	75.3	109.3	2055
16	64.0	Stiff gray clay w/sand pockets	54.3	68.2	105.2	2155
17	69.0	Medium stiff gray clay w/shell fragments	54.6	67.8	104.8	1705

*Unconsolidated Undrained Triaxial Compression Test - One Specimen; Confined at the approximate overburden pressure.

Name of Project: London Avenue Canal, Levee and Floodwall Improvements
Orleans Levee Board Project No. 2049-0269, New Orleans, Louisiana
For: The Board of Levee Commissioners of the Orleans Levee District, New Orleans, La.
Burk & Associates, Inc., New Orleans, Louisiana
Boring No. 53 Soil Technician A. J. Mayeux Date 4 December 1985
Ground Elev. ____ Datum ____ Gr. Water Depth See Text

Sample No.	Sample Depth — Feet From	To	Depth Stratum Feet From	To	Visual Classification	*Standard Penetration Test	
1	2.0	2.5	0.0		Medium stiff gray & tan clay w/sand lenses & pockets & trace of organic matter		
2	5.5	6.0			Medium stiff gray & tan clay w/sand pockets		
3	8.0	8.5		9.0	Medium stiff gray & tan clay w/vertical sand layers, organic matter & bricks		
	11.0	11.5	9.0	11.5	Wood w/organic matter & clay		
4	14.0	14.5	11.5	15.0	Soft gray & tan clay w/decayed roots		
5	15.0	16.5	15.0	17.0	Loose gray sand	1	5
6	17.5	19.0	17.0		Medium dense gray sand	2	13
7	20.0	21.5		28.0	Ditto	4	19
8	23.5	25.0			Ditto	2	15
9	28.5	30.0	28.0		Dense gray sand	5	35
10	33.5	35.0			Ditto	10	48
11	38.5	40.0		41.5	Ditto	7	32
12	43.5	45.0	41.5	47.0	Medium dense gray sand w/shell fragments	5	19
13	48.5	50.0	47.0	52.0	Loose gray sand w/shell fragments	2	8
14	53.5	55.0	52.0	56.5	Medium stiff gray clay w/sand layers	1	4
15	59.0	59.5	56.5	62.0	Stiff gray & tan clay w/sand pockets & shell fragments		
16	64.0	64.5	62.0	66.0	Stiff gray clay w/sand pockets		
17	69.0	69.5	66.0	70.0	Medium stiff gray clay w/shell fragments		

*Number in first column indicates number of blows of 140 lb. hammer dropped 30 in. required to seat 2-in. O.D. splitspoon sampler 6 in. Number in second column indicates number of blows of 140 lb. hammer dropped 30 in. required to drive 2-in. O.D. splitspoon sampler 1 ft. after seating 6 in.

WHILE THIS LOG OF BORING IS CONSIDERED TO BE REPRESENTATIVE OF SUBSURFACE CONDITIONS AT ITS RESPECTIVE LOCATION ON THE DATE SHOWN, IT IS NOT WARRANTED THAT IT IS REPRESENTATIVE OF SUBSURFACE CONDITIONS AT OTHER LOCATIONS AND TIMES.

CLAY SILT SAND HUMUS

Remarks: ____

Predominant type shown heavy. Modifying type shown light.

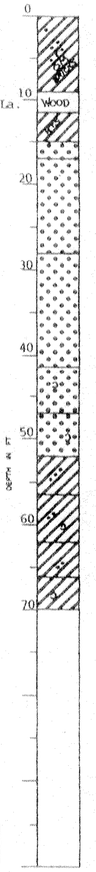

SYMBOL	DESCRIPTION	DATE	APPROVED
	REVISIONS		

U.S. ARMY ENGINEER DISTRICT, NEW ORLEANS
CORPS OF ENGINEERS
NEW ORLEANS, LOUISIANA

BOARD OF LEVEE COMMISSIONERS
ORLEANS LEVEE DISTRICT
NEW ORLEANS, LOUISIANA

MEYER ENGINEERS, LTD. METAIRIE, LOUISIANA
LAKE PONTCHARTRAIN, LA. AND VICINITY

HIGH LEVEL PLAN
LONDON AVE. OUTFALL CANAL, PARALLEL PROTECTION FLOODPROOFING OF FILMORE AVE. & MIRABEAU AVE. BRIDGES
ORLEANS PARISH, LOUISIANA

BORING LOGS

DESIGNED BY: JCS	DATE: 3-12-01	PLOT SCALE: 1"=1'	PLOT DATE: 07/30/01
DRAWN BY: MJT			
CHECKED BY: JCS	CADD FILE: 9362990		FILE NO. H-4-44674
SUBMITTED BY: MEYER ENGINEERS, LTD. DESIGN ENGINEER	SOLICITATION NO. DACW29-01-B-0092		DWG 90 OF 97

VALUE ENGINEERING: INCENTIVE CLAUSES — YOUR KEY TO HIGHER PROFITS

Safety is a Part of Your Contract

5 4 3 2 1

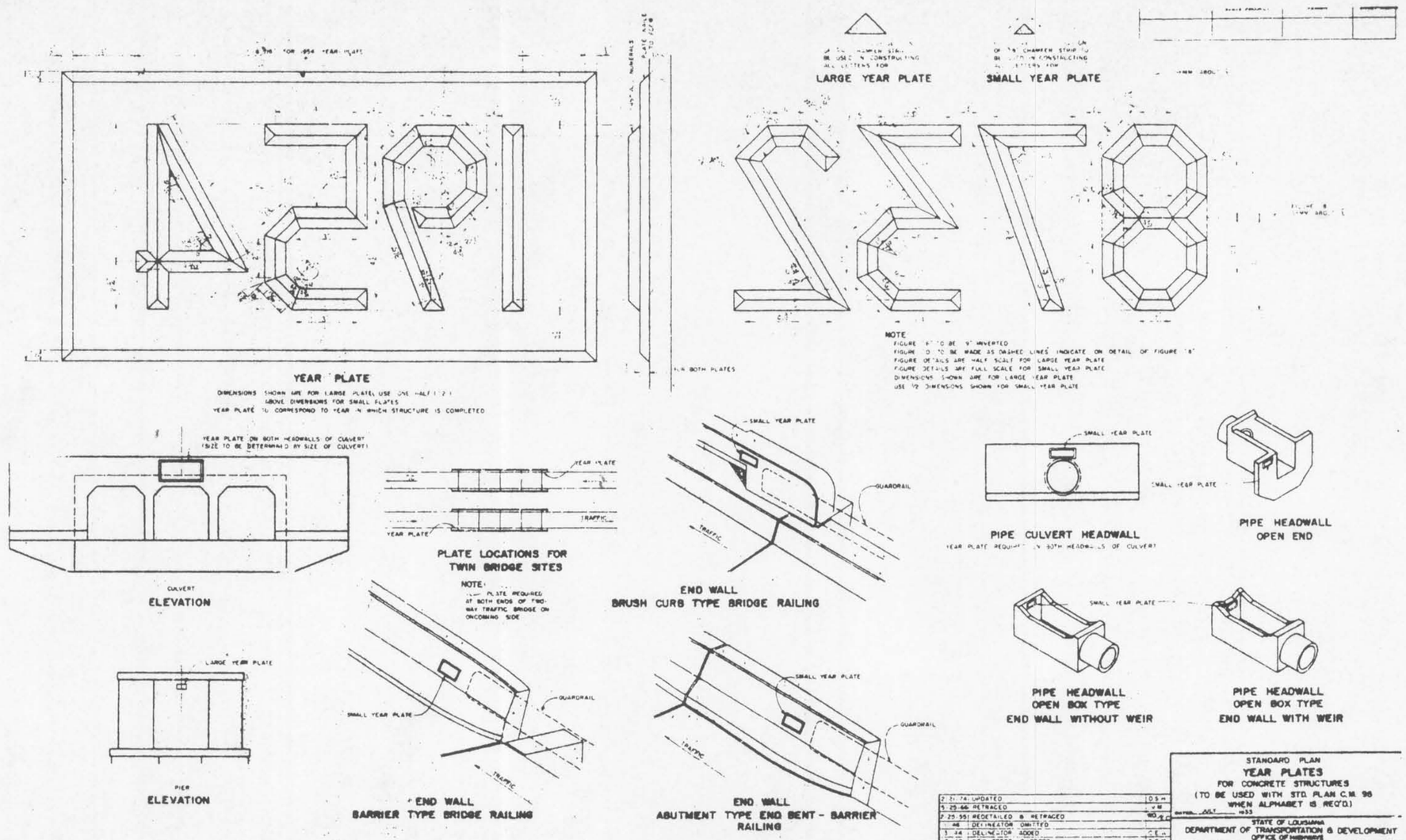

DATE	DESCRIPTION	BY
2-21-74	UPDATED	D.S.H.
5-25-66	RETRACED	V.M.
2-25-55	REDETAILED & RETRACED	WO/C.C.
1-46	DELINEATOR OMITTED	
3-44	DELINEATOR ADDED	C.E.H.
10-40	NEW SPECS & REORG	S.C.M.
10-40	RETRACED	M.I.H.

REVISIONS

C.M.97

STANDARD PLAN
YEAR PLATES
FOR CONCRETE STRUCTURES
(TO BE USED WITH STD. PLAN C.M. 96 WHEN ALPHABET IS REQ'D.)
DATED JULY 1933

STATE OF LOUISIANA
DEPARTMENT OF TRANSPORTATION & DEVELOPMENT
OFFICE OF HIGHWAYS

DESIGNED DETAILED R.V.W. TRACED C.D.
CHECKED CHECKED R.P. CHECKED
BRIDGE & STRUCTURAL DESIGN SECTION

APPROVED _____ CHIEF ENGINEER DATE _____

SYMBOL	DESCRIPTION	DATE	APPROVED

REVISIONS

U.S. ARMY ENGINEER DISTRICT, NEW ORLEANS
CORPS OF ENGINEERS
NEW ORLEANS, LOUISIANA

BOARD OF LEVEE COMMISSIONERS
ORLEANS LEVEE DISTRICT
NEW ORLEANS, LOUISIANA

MEYER ENGINEERS, LTD. METAIRIE, LOUISIANA
LAKE PONTCHARTRAIN, LA. AND VICINITY
HIGH LEVEL PLAN
LONDON AVE. OUTFALL CANAL, PARALLEL PROTECTION FLOODPROOFING OF FILMORE AVE. & MIRABEAU AVE. BRIDGES
ORLEANS PARISH, LOUISIANA

YEAR PLATES

DESIGNED BY: JCS DRAWN BY: MJF CHECKED BY: JCS	DATE: 3-12-01	PLOT SCALE: 1"=1'	PLOT DATE: 07/30/01
SUBMITTED BY: MEYER ENGINEERS, LTD. DESIGN ENGINEER	CADD FILE: 9362b91		FILE NO. H-4-44674
	SOLICITATION NO. DACW29-01-B-0092		DWG 91 OF 97

VALUE ENGINEERING INCENTIVE CLAUSES — YOUR KEY TO HIGHER PROFITS

Safety is a Part of Your Contract

Safety is a Part of Your Contract

WATSON-BOWMAN /ACME
ROLLED STEEL SHAPE *

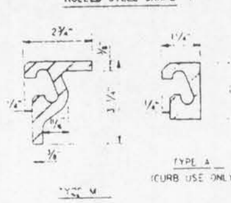

ONFLEX
STEEL EXTRUSIONS

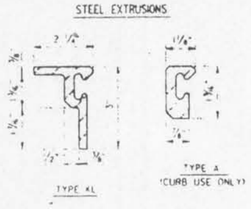

D.S.BROWN
ROLLED STEEL SHAPE *

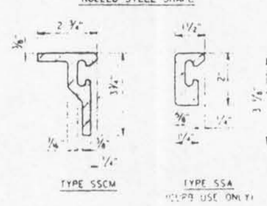

ESCO
STEEL EXTRUSIONS

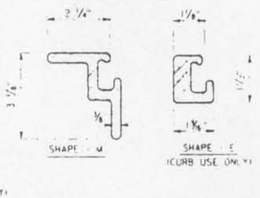

E-POXY INC.
STEEL EXTRUSIONS

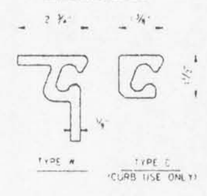

NEOPRENE EXTRUSIONS

TYPE SE 400

NEOPRENE EXTRUSIONS

TYPE 40 SS

NEOPRENE EXTRUSIONS

1.2" SEAL

NEOPRENE EXTRUSIONS

TYPE ES 400

NEOPRENE EXTRUSIONS

TYPE S 400

* REFERRED TO AS EXTRUSIONS IN THE NOTES.

LENCO
STEEL EXTRUSIONS

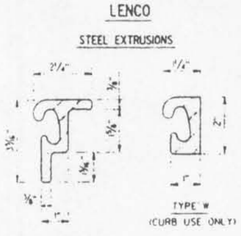

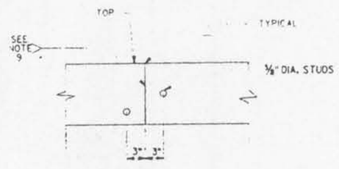

TYPICAL SPLICE

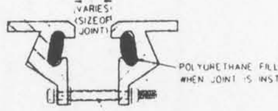

SECTION

½" Ø x 4" BOLT,
w/ ½" I.D. HEX NUT
½" I.D. FLAT WASHERS,
⅜" I.D. x ⅛" BLACK PIPE
SPACE 5'-0" O.C. (MAX.)

NEOPRENE EXTRUSIONS

TYPE L400

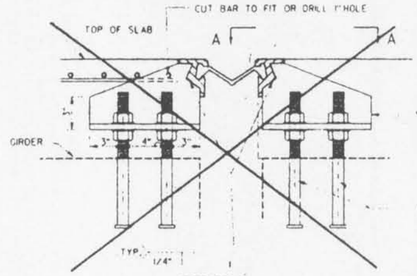

SECTION

* NOMINAL - DEPTH OF ANGLE MUST BE ADJUSTED TO FIT EACH PROJECT AND JOINT TYPE.

L 6"X 6"X ½" X 10"LONG CONNECTION @ EACH GIRDER.

(6) BOLT x 12"LONG (BY OTHERS)

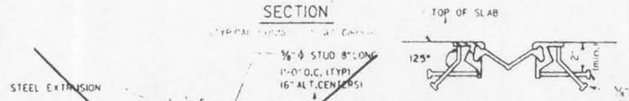

SECTION

L 6"X 6"X ½"X 10"LONG CONNECTION @ EACH GIRDER (GALV.)

SUPPORT DETAIL

TO BE USED WITH A CONCRETE GIRDER OR STEEL GIRDER WITH A WELDED STUD.

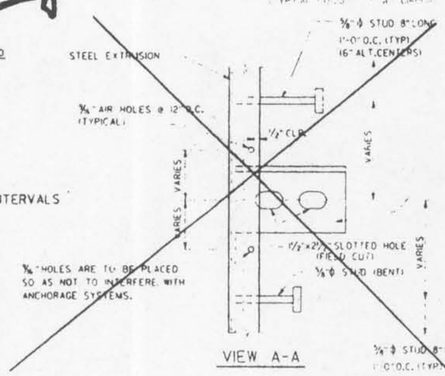

VIEW A-A

⅜"ø STUDS @ ABOUT 1'-0" (16" ALT. CENTERS)

NOTES:

1. THE FOLLOWING MATERIALS ARE ~~TO BE PAID FOR AT THE PRICE BID FOR~~ INCLUDED IN STRIP SEAL JOINTS.
   A. NEOPRENE EXTRUSION
   B. STEEL EXTRUSIONS
   C. 5/8" DIAMETER STUDS
   D. ALL STEEL PLATES REQUIRED FOR BARRIER SECTION
   E. CAP SCREWS AND NUTS, TEMPORARY STEEL SPACER BLOCKS AND POLYURETHANE FILLER ROD
   ~~F. EPOXY FOR ANCHORING STUDS, ETC.~~
   G. HEAVY DUTY ANCHOR STRAPS & REBAR
2. STRUCTURAL STEEL SHALL CONFORM TO ASTM A-36 OR A-588
3. THE MANUFACTURER'S RECOMMENDED CONSTRUCTION METHODS SHALL BE FOLLOWED.
4. ~~A FACTORY REPRESENTATIVE IS TO BE PRESENT DURING THE INSTALLATION OF THE JOINTS.~~
5. SHOP DETAILS OF JOINTS SHALL BE SUBMITTED FOR APPROVAL PRIOR TO FABRICATION.
6. STEEL EXTRUSIONS SHALL BE SHIPPED IN PAIRS.
7. POLYURETHANE FILLER ROD WILL BE PLACED IN THE STEEL EXTRUSION'S CAVITY PRIOR TO SHIPMENT. THIS ROD WILL BE REMOVED ONLY WHEN THE NEOPRENE EXTRUSION IS TO BE INSTALLED IN PLACE.
8. ~~ALL SHOP WELDING SHALL CONFORM TO THE LA.DOTD PROCEDURAL WELDING CODE AND TO AWS GENERIC STEEL WELDING CODE.~~
9. WELDED SPLICES OF STEEL EXTRUSIONS SHALL BE SHOP SPLICES AND EACH PORTION OF THE EXTRUSION SHALL BE NOT LESS THAN 15 FEET IN LENGTH EXCEPT THAT ONE SECTION, NOT LESS THAN 4 FEET IN LENGTH WILL BE ALLOWED IN THE SHOULDER AREA IF REQUIRED TO MATCH THE ROADWAY CROSS SECTION. ALL SPLICES SHALL BE MADE SO AS TO OCCUR OUTSIDE THE WHEEL PATHS. (SEE DETAIL ON SHEET 2 OF 2.) IF A SECTION LESS THAN 15 FEET IS USED, THE CONNECTION STUDS WILL BE SPACED AT 3 INCH ALTERNATE CENTERS. ALL SPLICE LOCATIONS WILL BE SHOWN ON THE SHOP DRAWINGS. DRAWINGS WILL NOT BE APPROVED UNLESS THE LOCATIONS ARE DESIGNATED ON THE DRAWINGS. THE LOCATIONS MAY BE DESIGNATED WITH A +/- 6 INCH TOLERANCE. WELDED SPLICES ARE ALSO REQUIRED WHERE TWO DIFFERENT STEEL SHAPES ARE JOINED AT THE CURB AREA AND WHERE THE CURB UNITS ARE TURNED UP.

   WELDED SPLICES WILL BE BUTT SPLICES AND CARE SHALL BE TAKEN NOT TO ALLOW WELD METAL TO INVADE THE SEAL CAVITY. WELD MATERIAL IN THE CAVITY WILL BE CAUSE FOR REJECTION. CONNECTION STUDS WILL BE LOCATED 3 INCHES EITHER SIDE OF WELDED SPLICES.
10. NEOPRENE EXTRUSIONS HAVE TO BE MANUFACTURED AS A CONTINUOUS PIECE WITH ONLY ONE (1) SHOP SPLICE PER JOINT ALLOWED WHEN LENGTH EXCEEDS 50 FEET. THE NEOPRENE STRIP SEAL SHALL BE AN EXTRUDED NEOPRENE MATERIAL CONFORMING TO ASTM DESIGNATION: D2628 MODIFIED TO OMIT RECOVERY TEST AND TO REVISE THE REQUIRED DUROMETER - TYPE A HARDNESS TO 55 +5/-10 AS DETERMINED BY ASTM D2240.
11. SEAL SHALL BE BONDED TO STEEL WITH A PRE-MIXED LUBRICATING ADHESIVE SOLUTION WHICH SHALL BE USED TO FACILITATE THE SEAL INSTALLATION. THIS LUBRICANT ADHESIVE SHALL BE SELECTED FROM THE LA.DOTD QUALIFIED PRODUCTS LIST, AS MAINTAINED BY THE DEPARTMENT'S MATERIALS SECTION. THE LUBRICANT SHOULD FLOW FREELY AND EVENLY COAT THE SEAL AND JOINT FACE. THE LUBRICANT SHOULD COMPLETELY COAT THE SEAL AND STEEL EXTRUSION CAVITY WHICH REMAIN IN CONTACT.
12. ALL METAL SURFACES NOT EMBEDDED IN CONCRETE SHALL BE SHOP PAINTED WITH TWO COATS OF INORGANIC ZINC PRIMER AND TOP COATS. CARE SHALL BE TAKEN THAT A PAINT BUILD-UP DOES NOT OCCUR IN THE BOTTOM OF THE STEEL EXTRUSION CAVITY.
13. JOINTS UP TO FIFTY FOUR (54) FEET IN LENGTH SHALL BE DELIVERED TO THE JOB SITE IN ONE PIECE. JOINTS OVER FIFTY FOUR (54) FEET IN LENGTH MAY HAVE PROVISIONS FOR A FIELD SPLICE IN THE STEEL EXTRUSIONS PROVIDING THE SPLICE IS PERFORMED IN SHOP UNDER CONDITIONS ~~OF CONTROL SIMILAR TO THAT REQUIRED~~ AND MEET THE REQUIREMENTS OF NOTE 9 ABOVE. ALL OTHER WELDED SPLICES OF STEEL EXTRUSIONS SHALL BE SHOP SPLICES.
14. ~~ALL LABOR, MATERIALS, EQUIPMENT, MANUFACTURED FABRICATION AND INCIDENTALS PERTAINING TO THE INSTALLATION OF THE JOINT SHALL BE PAID FOR UNDER ITEM 805-00.~~
    ~~THE LENGTH FOR JOINT MEASURED ALONG THE ROADWAY CENTERLINE SHALL BE USED.~~
15. ALL STUDS SHALL BE BENT PRIOR TO WELDING TO THE JOINT

STRIP SEAL JOINT DETAILS (4")

		STATE PROJECT	PARISH	SHEET NO.

SYMBOL	DESCRIPTION	DATE	APPROVED

REVISIONS

5/22/95	ADDED ITEM #805NB4 BENDING ANGLE ON STUDS.	TWA	
9/13/94	ADDED NOTE TO TYP. CONC. GIRDER & STUDS (E).	NPK	
5/5/94	PAYMENT ITEM CHANGED ON NOTE * 14	NPK	
3/1/94	SPACER S. CORN. STUD AT WELDED SPLICES	NPK	
8/09/93	ANCHOR BOLTS LOCATION AT END TYP.	NPK	
5/20/93	SLOTTED HOLES SHALL BE FIELD CUT	BY	
DATE	REVISIONS	CHECKED D. MILES	

DEPARTMENT OF TRANSPORTATION AND DEVELOPMENT
STATE OF LOUISIANA
DESIGNED KNAPP — DETAILED A.N.N.W.&F.O.R — QUANTITIES —
CHECKED D. MILES — REVIEWED KNAPP — FILE STRIPS30.JGN

U.S. ARMY ENGINEER DISTRICT, NEW ORLEANS
CORPS OF ENGINEERS
NEW ORLEANS, LOUISIANA

BOARD OF LEVEE COMMISSIONERS
ORLEANS LEVEE DISTRICT
NEW ORLEANS, LOUISIANA

MEYER ENGINEERS, LTD. METAIRIE, LOUISIANA
LAKE PONTCHARTRAIN, LA. AND VICINITY

HIGH LEVEL PLAN
LONDON AVE. OUTFALL CANAL, PARALLEL PROTECTION FLOODPROOFING OF
FILMORE AVE. & MIRABEAU AVE. BRIDGES
ORLEANS PARISH, LOUISIANA

STRIP SEAL JOINT DETAILS

DESIGNED BY: JCS	DATE: 3-12-01	PLOT SCALE: 1"=1'	PLOT DATE: 07/30/01
DRAWN BY: MJF			
CHECKED BY: JCS	CADD FILE: 9382b92		FILE NO. H-4-44674
SUBMITTED BY: MEYER ENGINEERS, LTD — DESIGN ENGINEER	SOLICITATION NO. DACW29-01-B-0092		DWG. 92 OF 97

VA-UE INCENTIVE CASES ENGINEERING — YOUR KEY TO HIGHER PROFITS

C·A·D

Safety is a Part of Your Contract

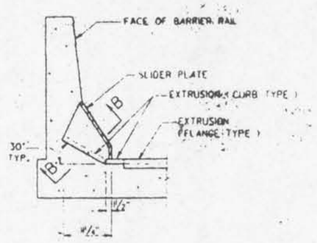

BARRIER SECTION
LOW SIDE ONLY

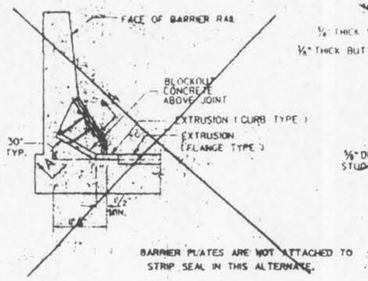

~~ALTERNATE DETAIL FOR PLACEMENT OF COVER PLATE~~

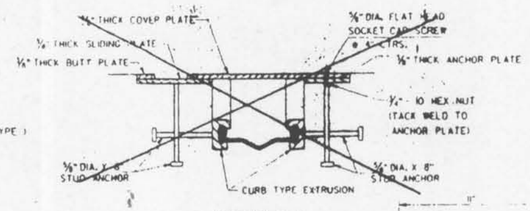

~~SECTION A-A~~

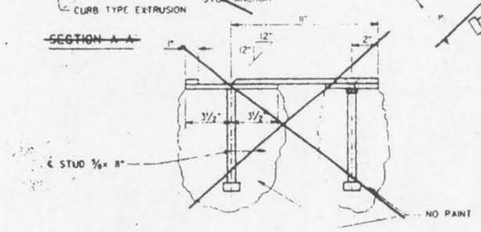

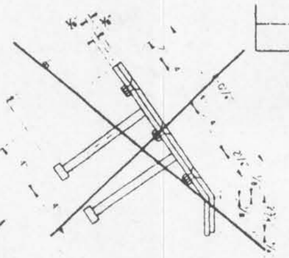

~~SIDE VIEW~~

	STATE PROJECT	PARISH	SHEET NO.

BENT NO.	TOTAL JT. MOVEMENT	LIN. FT. **	"D"

@ THE "D" DIMENSION IS GIVEN FOR THE AVERAGE TEMPERATURE (68°) AND AT 100° THE MINIMUM OPENING IS TO BE 1"

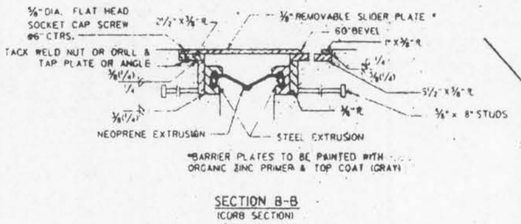

SECTION B-B
(CURB SECTION)

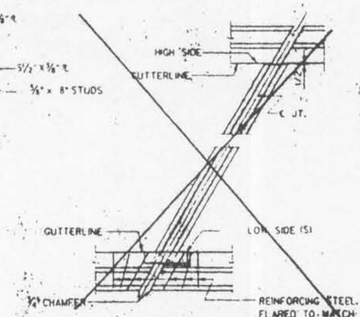

PART PLAN VIEW OF STRIP SEAL
JOINT AT INTERIOR JOINT

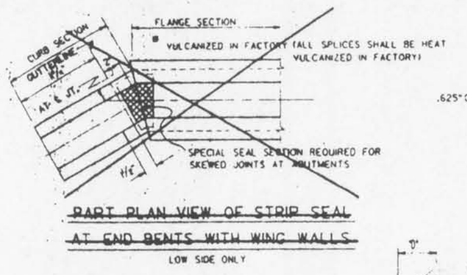

PART PLAN VIEW OF STRIP SEAL
AT END BENTS WITH WING WALLS
LOW SIDE ONLY

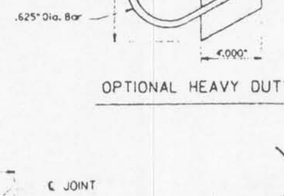

OPTIONAL HEAVY DUTY ANCHOR SYSTEM

SPLICE LOCATIONS SHALL BE LOCATED SO AS NOT TO FALL IN THE "NORMAL LINE OF WHEELS." EXCEPT FOR CURB SECTIONS, ALL EXTRUSIONS SHALL BE A MINIMUM OF 15 FT. BETWEEN SPLICES EXCEPT WHEN NOTED OTHERWISE ON THE SPAN SHEET.

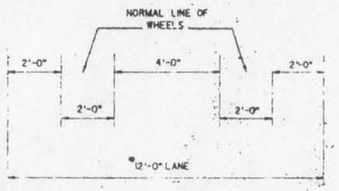

*DIMENSIONS SHOWN ARE NORMAL TO ROADWAY. WHEN JOINT IS PLACED ON SKEW THE DIMENSIONS SHOWN WILL VARY TO MEET THE SKEW DIMENSIONS ALONG THE ℄ OF THE JOINT.

SPLICE LOCATIONS

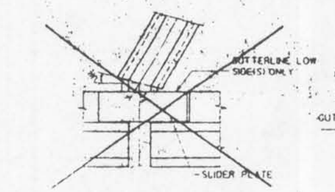

~~GUTTER DETAIL FOR END BENTS WITH WINGWALLS~~
LOW SIDE ONLY

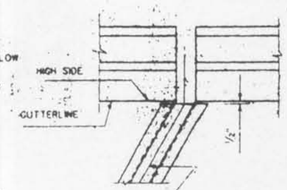

GUTTER DETAIL FOR END JOINTS
HIGH SIDE ONLY

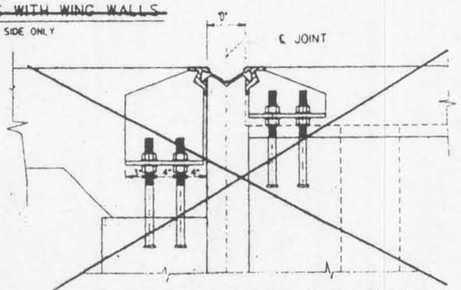

PART SECTION SHOWING ANCHORAGE SYSTEM AND END DAM CONNECTION
(TYPICAL SECTION AT CONNECTION BENT)

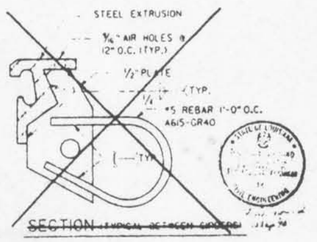

~~SECTION~~ (TYPICAL BETWEEN GIRDERS)

STRIP SEAL JOINT DETAILS (4")

3/22/90	ADDED ITEM 805 (1) B BENDING ANGLE ON STUDS	DATED MAY, 1993	
9/13/94	ADDED NOTE 10, TYP. CONN. GIRDER & STUD CLR.	TWA	
5/5/94	PAYMENT ITEM CHANGED ON NOTE * 14	NPK	
1/1/94	SPACER & CONN. STUD AT WELDED SPLICES	NPK	
11/09/95	ANCHOR BOLTS LOCATION AT END DAM	NPK	
5/20/93	SLOTTED HOLES SHALL BE FIELD CUT	NPK	
DATE	DESCRIPTION	BY	

REVISIONS

STATE OF LOUISIANA
DEPARTMENT OF TRANSPORTATION AND DEVELOPMENT

DESIGNED KNAPP	DETAILED A.N.N/BEAFOR	DRAWN STADIONS	
CHECKED D. MILLER	CHECKED KNAPP	FILE STP0500.DGN	

SYMBOL	DESCRIPTION	DATE	APPROVED

REVISIONS

U.S. ARMY ENGINEER DISTRICT, NEW ORLEANS
CORPS OF ENGINEERS
NEW ORLEANS, LOUISIANA

BOARD OF LEVEE COMMISSIONERS
ORLEANS LEVEE DISTRICT
NEW ORLEANS, LOUISIANA

MEYER ENGINEERS, LTD. METAIRIE, LOUISIANA

LAKE PONTCHARTRAIN, LA. AND VICINITY
HIGH LEVEL PLAN
LONDON AVE. OUTFALL CANAL, PARALLEL PROTECTION FLOODPROOFING OF
FILMORE AVE. & MIRABEAU AVE. BRIDGES
ORLEANS PARISH, LOUISIANA

STRIP SEAL JOINT DETAILS

DESIGNED BY: JCS	DATE: 3-12-01	PLOT SCALE: 1"=1'	PLOT DATE: 07/30/01
DRAWN BY: MJF			
CHECKED BY: JCS	CADD FILE 0362093		FILE NO. H-4-44674
SUBMITTED BY: MEYER ENGINEERS, LTD DESIGN ENGINEER	SOLICITATION NO. DACW29-01-B-0092		DWG. 93 OF 97

VALUE ENGINEERING INCENTIVE CLAUSES — YOUR KEY TO HIGHER PROFITS

Safety is a Part of Your Contract

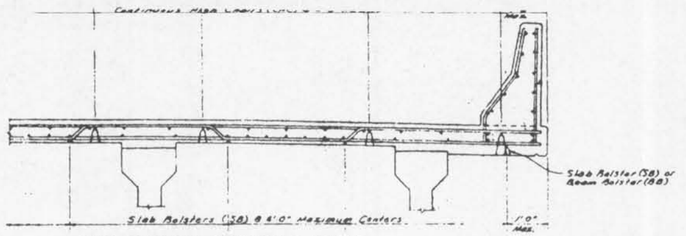

STEEL OR CONCRETE GIRDER SPAN - LAYOUT "A"

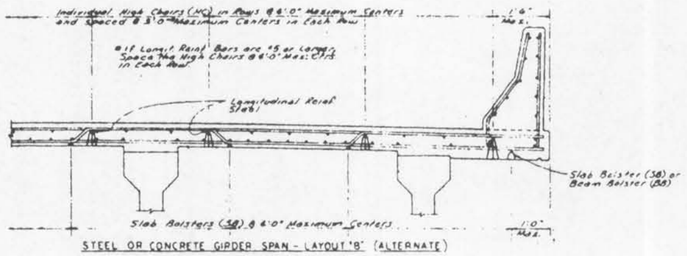

STEEL OR CONCRETE GIRDER SPAN - LAYOUT "B" (ALTERNATE)

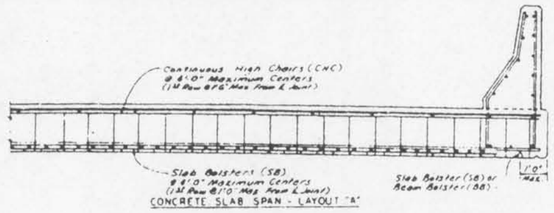

CONCRETE SLAB SPAN - LAYOUT "A"

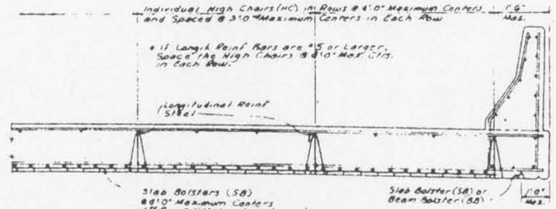

CONCRETE SLAB SPAN - LAYOUT "B" (ALTERNATE)

TYPE OF SUPPORT	BAR SUPPORT ILLUSTRATION	MINIMUM WIRE SIZES Δ				REMARKS
		HEIGHT	TOP	LEGS		
Slab Bolster (SB)	5"	All	#4 Corrugated	#4 @		Wire Corrugations Spaced 1" on Centers
Beam Bolsters (BB)		Up to 2"	#4	#4 @		
		Over 2"	#4 @	#4 @		
@ Individual High Chair (HC)		5" to 8"	-	#4 @		
		8" to 9"	-	#4 @		
		Over 9"	-	#4 @		
@ Continuous High Chair (CHC)		5" to 8"	#4 @	#4 @		
		8" to 9"	#4 @	#4 @		
		Over 9"	#4 @	#4 @		

@ Legs at 20 degrees or less with vertical. When height exceeds 15", reinforce legs with welded cross wires or encircling wires.

* Legs at 20 degrees or less with vertical. All legs 8" on center maximum, with leg within 4" of end of chair, and Spread between legs not less than 50% of nominal height.

Δ American Steel & Wire Gauges.

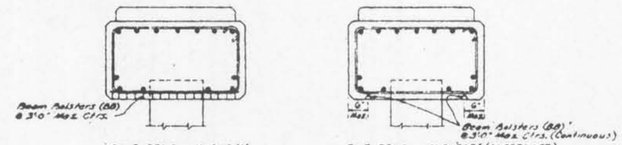

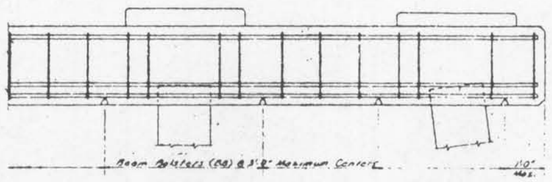

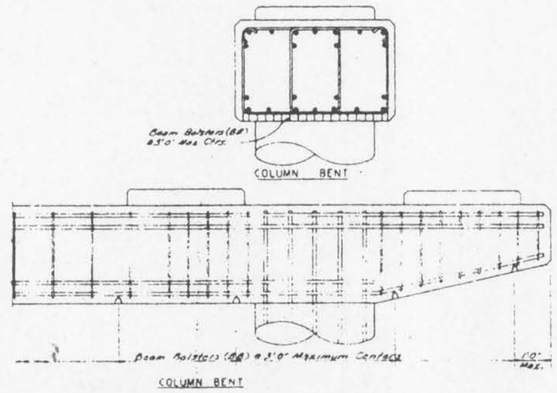

GENERAL NOTES:

Steel Wire Bar Supports Shall be in accordance with the latest Approved Louisiana Std. Specs. for Roads and Bridges, 1982, as Amended by Special Provisions and/or Supplemental Specifications.
Reinforcing Steel Bars Shall be Tied in Accordance with the latest Approved Louisiana Std. Specs. for Roads and Bridges, 1982, or amended by Special Provisions and/or Supplemental Specifications.
A #5 S Bar with Individual High Chairs @ 6'-0" Max. C/Cs. or a #4 S Bar with Individual High Chairs @ 3'-0" Max. C/Cs. may be Substituted for a One Per One Basis, for the Continuous High Chairs.
Height of Bar Supports to be that Required to Support the Reinf. Bars in Positions Shown on Plans.
Bar Supports are not intended, and Shall not be used, to Support Runways for Concrete Buggies or Similar Loads.

When bar supports are placed in continuous lines, they shall be so placed that the ends of the supporting wires shall be lapped to tie the last leg of an adjoining piece, but no bar shall be placed more than 2" beyond the last leg at the end of a run of any continuous supports.

Where bar supports are used on earth or aggregate subgrades, suitable plates shall be provided to prevent displacement of the support feet. All bar supports bearing on the forms shall have radius bearing legs in the form of a hook (upturned legs) or spherical feet at the lower end of the legs.

STEEL WIRE BAR SUPPORTS

STANDARD PLAN
BAR SUPPORTS
FOR
REINFORCING STEEL

DATED MARCH 27 1973

STATE OF LOUISIANA
DEPARTMENT OF TRANSPORTATION & DEVELOPMENT
OFFICE OF HIGHWAYS

DESIGNED — DETAILED — TRACED
CHECKED — CHECKED — CHECK. IN
BRIDGE & STRUCTURAL DESIGN SECTION

APPROVED _____ DATE _____
CHIEF ENGINEER

DATE	REVISIONS	BY
6.8.83	SHT Specs, Date & Min. Wire Sizes	JJ
3.1.93	Chair Heights	JJ
11.12.98	Mark regarding unfurnished 10-3	RC

S.W.B.S. 100

SYMBOL	DESCRIPTION	DATE	APPROVED
	REVISIONS		

U.S. ARMY ENGINEER DISTRICT, NEW ORLEANS
CORPS OF ENGINEERS
NEW ORLEANS, LOUISIANA

BOARD OF LEVEE COMMISSIONERS
ORLEANS LEVEE DISTRICT
NEW ORLEANS, LOUISIANA

MEYER ENGINEERS, LTD. METAIRIE, LOUISIANA
LAKE PONTCHARTRAIN, LA. AND VICINITY
HIGH LEVEL PLAN

LONDON AVE. OUTFALL CANAL, PARALLEL PROTECTION FLOODPROOFING OF
FILMORE AVE. & MIRABEAU AVE. BRIDGES
ORLEANS PARISH, LOUISIANA

BAR SUPPORTS FOR REINFORCING STEEL

DESIGNED BY: JCS	DATE: 3-12-01	PLOT SCALE: 1"=1'	PLOT DATE: 07/30/01
DRAWN BY: MJF			
CHECKED BY: JCS	CADD FILE: 9362694		FILE NO. H-4-44674
SUBMITTED BY: MEYER ENGINEERS, LTD. DESIGN ENGINEER	SOLICITATION NO. DACW29-01-B-0092		DWG. 94 OF 97

VALUE ENGINEERING INCENTIVE CLAUSES — YOUR KEY TO HIGHER PROFITS

	STATE PROJECT	PARISH	SHEET NO.

ADVANCE ROAD (STREET) CONSTRUCTION SIGN (W20-1)

The Road (Street) Construction sign is to be located in advance of the total activity or detour a driver may encounter, and is intended for use as a general warning of obstructions or restrictions. It carries the legend ROAD (STREET) CONSTRUCTION ( ) FT. or ROAD (STREET) CONSTRUCTION ( ) MILE. It may be used in repetition with appropriate legends, or in conjunction with other construction signs.

The legend ROAD (STREET) CONSTRUCTION AHEAD is intended mainly for use on approaches of Roads (Streets) that intersect the route under construction in between the 500 FT. advance warning signs and the End Construction sign. It is also employed as the first advance sign in urban settings with short 250' spacing.

ROAD CONSTRUCTION 1500 FT

W20-1
48" x 48"

ADVANCE DETOUR SIGN (W20-2)

The Detour sign is intended for use in advance of a point at which traffic is diverted over a temporary roadway or route. It carries the legend DETOUR ( ) FT. or DETOUR ( ) MILE. It may be used in repetition with appropriate legends or in conjunction with other construction signs.

DETOUR 1000 FT

W20-2
48" x 48"

ADVANCE ROAD (STREET) CLOSED SIGN (W20-3)

The Road (Street) Closed sign is intended for use in advance of a point at which a roadway is closed to all traffic or to all but local traffic. It carries the legend ROAD (STREET) CLOSED ( ) FT. or ROAD (STREET) CLOSED ( ) MILE. It may be used in repetition with appropriate legends or in conjunction with other construction signs.

ROAD CLOSED 1000 FT

W20-3
48" x 48"

ADVANCE ONE LANE ROAD SIGN (W20-4)

The One Lane Road sign is used only in advance of a point where traffic in both directions must use a single lane. It carries the legend ONE LANE ROAD ( ) FT. or ONE LANE ROAD ( ) MILE. It may be used in repetition with appropriate legends or in conjunction with other construction signs.

If the affected one-lane roadway is not visible from one end to the other, or if traffic is such that simultaneous arrivals at both ends occur frequently, flagging procedures or signal control shall be used to control alternate traffic flows. In general, two-way traffic will always be restored at night. Only in special low volume and/or short length situations will a one lane road be left at night unattended.

ONE LANE ROAD 1000 FT

W20-4
48" x 48"

ADVANCE LANE CLOSED SIGN (W20-5)

The Lane Closed sign is intended for use in advance of a point where one lane of a multiple-lane roadway is closed. It carries the legend RIGHT (LEFT) LANE CLOSED ( ) FT. or RIGHT (LEFT) LANE CLOSED ( ) MILE. It may be used in repetition with appropriate legends or in conjunction with other construction signs.

RIGHT LANE CLOSED 1500 FT

W20-5
48" x 48"

ADVANCE FLAGGER SIGN (W20-7)

The Flagger sign is used in advance of any point at which a flagger has been stationed to control traffic through a construction or maintenance project. When needed, an appropriate distance message may be displayed on a supplemental plate below the symbol sign. It may be used in repetition with appropriate revisions in the supplemental distance plate or in conjunction with other construction signs.

The word message sign W20-7 with appropriate distances may be used as an alternate to the W20-7a flagger symbol sign.

The sign shall be promptly removed, covered, or turned to face away from the roadway when the flagger is not at the station.

FLAGMAN AHEAD
500 FEET

W20-7
36" x 36"
Supplemental Plate
24" x 18"

500 FEET

W20-7a
36" x 36"
Supplemental Plate
24" x 18"

ROAD CLOSED SIGN (R11-2)

The Road (Street) Closed Sign shall be used where the road is closed to all traffic except contractors' equipment and officially authorized vehicles. It should be erected at or near the center of the roadway above a Type III barricade. The words BRIDGE OUT may be substituted for ROAD CLOSED where applicable. It shall have a standard and minimum size of 48 in. by 30 in.

The Road Closed sign shall not be used where traffic is maintained or where the actual closure is some distance beyond the sign and local traffic is permitted access to nearer points.

ROAD CLOSED

R11-2
48" x 30"

Background - White
Legend & Border - Black
Legend - 8" Series D

ROAD MACHINERY AHEAD SIGN (W21-3)

The Road Machinery sign shall be used in areas where heavy road equipment such as a grader is operating in or closely adjacent to the roadway.

FRESH OIL SIGN (W21-2)

The Fresh Oil or Fresh Tar sign shall be used to warn motorists that resurfacing operations have rendered the surface of the pavement temporarily hazardous and that objectionable splashing on vehicles may occur.

ROAD MACHINERY AHEAD

W21-3
36" x 36"

Legend 5" Series D

FRESH OIL

W21-2
30" x 30"

Legend 6" Series D

ROAD WORK AHEAD SIGN (W21-4)

The Road Work sign is intended for use in advance of maintenance or minor reconstruction operations in the roadway.

ROAD WORK 1 MILE

W21-4
36" x 36"

Legend 5" Series D

SHOULDER WORK AHEAD SIGN (W21-5)

The Shoulder Work sign is intended for use in advance of maintenance or minor reconstruction operations involving the shoulder, where the traveled way remains unobstructed.

SURVEY CREW SIGN (W21-6)

The Survey Crew sign is intended for use in advance of a point where a surveying party is working in or closely adjacent to the roadway.

SHOULDER WORK

W21-5
30" x 30"

Legend 5" Series C

SURVEY CREW

W21-6
30" x 30"

Legend 5" Series D

LENGTH OF CONSTRUCTION SIGN (G20-1)

The Length of Construction guide sign shall be erected at the beginning of any major road construction or maintenance job of more than 2 miles in length. Where traffic is maintained through the job it carries the legend ROAD CONSTRUCTION NEXT ( ) MILES. Ordinarily it should be mounted on top of a Type III barricade. The project length shall be approximated only to the nearest tenth of a mile.

END CONSTRUCTION SIGN (G20-2)

The End Construction Sign shall be erected approximately 500 feet beyond the end of a major construction or maintenance job to indicate the limits of any restrictions or special procedures that have been imposed.

ROAD CONSTRUCTION NEXT 5.0 MILES

G20-1
60" x 36"

END CONSTRUCTION

G20-2
60" x 24"

Legend - 6" Series C

DETOUR SIGNS

The Detour Arrow sign (M4-10) is used only at the point where a detour roadway or route has been established due to the closure of a street or highway to through traffic. It should usually be mounted just below the Road Closed sign or the Local Traffic Only sign, normally on top of a Type III barricade.

The Detour marker (M4-8) mounted on a route marker assembly is to be used to mark a temporary detour route that branches from a regular numbered route, bypasses a section of a route that is closed by construction, or other reasons, and rejoins the regular route beyond that section. The route marker assembly shall include an arrow indicating the direction of the detour.

The Detour sign (M4-9) is to be used for unnumbered routes, in emergency situations, for periods of short duration, or where it is not necessary to show route markers to guide traffic along the desired route. A Street Name sign may be placed above or incorporated in the Detour sign to indicate the name of the roadway for which the detour was established.

DETOUR

M4 - 9 R
M4 - 9 L
30" x 24"

DETOUR

M4 - 8
12" x 24"

DETOUR

M4 - 10 R
M4 - 10 L
48" x 18"

Background - Black
Legend - Black
Arrow - Orange
Legend - 6" Series D

LOCAL TRAFFIC ONLY SIGN (R11-3)

The Local Traffic Only sign shall be used where through traffic must detour to avoid a closing of the highway at a construction or maintenance job some distance beyond but where the highway is open for traffic up to the point of closure. It carries the Legend ROAD CLOSED ( ) MILES AHEAD - LOCAL TRAFFIC ONLY. It should be erected at both sides of the roadway near a Type III barricade. Normally it will be accompanied by a detour arrow sign indicating the proper route for through traffic. The words BRIDGE OUT may be substituted for ROAD CLOSED where applicable. Where the sign faces through traffic it shall be preceded by an advance road closed sign with the secondary legend closed, and if applicable an advance detour sign. The distance from the sign to the road closure shall be approximated to the nearest tenth of a mile.

ROAD CLOSED
10.0 MILES AHEAD
LOCAL TRAFFIC ONLY

R11-3
60" x 30"

Background - White
Legend & Border - Black
Legend - Line 1 - 6" Series C
Line 2 - 5" Series C
Line 3 - 4" Series C

TWO WAY TRAFFIC SIGN (W6-3)

The Two Way Traffic Sign is intended for use where a roadway designed or normally used for one way traffic is temporarily being used for traffic in both directions or where under any circumstance it may be necessary to remind drivers that they are traveling on a two way roadway. The sign should be placed at intervals of about one-half mile but not exceeding one mile. Special care must be taken to place it at or just beyond any important access points.

W6-3
48" x 48"

SIDE ROAD CONSTRUCTION AHEAD SIGN

The Side Road Construction Ahead sign is intended for use in advance of an intersection where the road construction project on the side roadway approach terminates at the crossing. No construction activity shall be on the through roadway.

SIDE ROAD CONSTRUCTION AHEAD

36" x 36"

Legend 5" Series C

DO NOT PASS SIGN (R4-1)

The Do Not Pass sign may be used on a two or three-lane road, the beginning of, and at intervals of 1500' within a work zone through which restricted sight distance or other conditions make overtaking and passing hazardous. Where standard pavement markings are present, the sign need not be used. However, the sign may be used in addition to the pavement markings to emphasize a restriction on passing.

Because a driver about to pass often has only a restricted view to the right, consideration should be given to placing a sign on the left-hand side of the roadway. The No Passing Zone sign (W14-3) used on the left-hand side of two-way roadways, should be considered as a supplement to the enforceable no-passing zone marking, which is the regulatory marking and/or the regulatory Do Not Pass sign.

PASS WITH CARE SIGN (R4-2)

The Pass With Care sign should be used at the end of a no-passing zone where a Do Not Pass sign has been erected at the beginning of the zone. It shall be of the same size and erected in the same manner as the Do Not Pass sign.

DO NOT PASS

R4-1
24" x 30"

Background - White
Legend & Border - Black
Legend - 6" Series D

PASS WITH CARE

R4-2
24" x 30"

Background - White
Legend & Border - Black
Legend - 6" Series D

ONE WAY SIGNS

The One Way Sign shall be used to indicate streets or roadways upon which vehicular traffic is allowed to travel in one direction only. The vertical design has advantages where lateral space is limited. Both designs may use either right or left arrows.

ONE WAY

R6-1 L
R6-1 R
36" x 12"

Background - Black
Legend - Black
Arrow - White
Legend - 4" Series D

ONE WAY

R6-2 L
R6-2 R
18" x 24"

Background - White
Legend & Border - Black
Legend - 5" Series D

SPEED LIMIT SIGN

Preexisting speed limits shall at no time be increased during construction and shall remain in effect, except when reduced as hereby indicated.

A reduced speed limit of 45 MPH shall be used where shown on plans and may be used at locations within the project limits where construction activities have altered the roadway below original conditions, or where work is in progress and/or equipment is in the immediate vicinity of the travelway. The speed limit can be reduced to 20 MPH if workers are in close proximity to traffic. Preexisting signs exceeding the construction speed limit shall be removed or covered.

Reduced speed limits should begin approximately 750 ft. (275 ft. in urban areas) in advance of the point of actual need, and be removed or covered when not required. Reduced speed limits shall also be posted at or just beyond any important access point.

The reduced speed zone shall be terminated by erecting a speed limit sign showing the original speed limit. Work zones separated by less than ½ mile shall be considered as a single zone and be continuously posted.

The "Speed Zone Ahead" sign shall be erected in advance of each reduced speed zone sign within a construction area.

SPEED ZONE AHEAD

R2-5c
24" x 30" Standard
48" x 60" on Interstate and Freeways

Background - White
Legend & Border - Black
Legend - Line 1, 2 & 3
6" Series C

SPEED LIMIT 45

R2-1
24" x 30" Standard
48" x 60" on Interstate and Freeways

Background - White
Legend & Border - Black
Legend - Line 1 & 2
4" Series E
Line 3 - 10" Series E

ADVISORY SPEED PLATES (W13-1)

In conjunction with any warning sign an advisory speed plate may be used to indicate a maximum recommended speed through a hazardous area. Except in emergencies an advisory speed plate shall not be erected until the recommended speed has been determined by the traffic engineer. Advisory speeds greater than the posted speed limit shall not be used.

45 M.P.H.

W13-1
18" x 18"

Line 1 - 8" Series E
Line 2 - 3" Series E

SOFT SHOULDERS SIGN

The soft shoulders and or the low shoulders signs shall be used when in the opinion of the project engineer the shoulder of the highway under construction becomes hazardous to traffic.

SOFT SHOULDER

W8-4
30" x 30"

LOW SHOULDER

W8-9
30" x 30"

Legend 5" Series C

NOTE:
All signs on this sheet shall have orange backgrounds with black legends and borders, except where otherwise specified.

DATE	DESCRIPTION	BY	APPROVED
	Redrew and update to 1993 standards[illegible]		

REVISIONS

STANDARD PLAN NO. HS-01 | 1 of 1

STANDARD PLAN
HIGHWAY SIGN AND BARRICADE DETAILS
FOR CONSTRUCTION PROJECTS

DATED

STATE OF LOUISIANA
DEPARTMENT OF TRANSPORTATION AND DEVELOPMENT

DESIGNED A. Carmi | DETAILED D. [illegible] | TRACED
CHECKED [illegible] | CHECKED A. Carmi | CHECKED
APPROVED [illegible] CHIEF ENGINEER | DATE 9-1[illegible]-94

Safety is a Part of Your Contract

VALUE ENGINEERING INCENTIVE CLAUSES — YOUR KEY TO HIGHER PROFITS

SYMBOL	DESCRIPTION	DATE	APPROVED

REVISIONS

U.S. ARMY ENGINEER DISTRICT, NEW ORLEANS
CORPS OF ENGINEERS
NEW ORLEANS, LOUISIANA

BOARD OF LEVEE COMMISSIONERS
ORLEANS LEVEE DISTRICT
NEW ORLEANS, LOUISIANA

MEYER ENGINEERS, LTD. METAIRIE, LOUISIANA

LAKE PONTCHARTRAIN, LA. AND VICINITY
HIGH LEVEL PLAN
LONDON AVE. OUTFALL CANAL, PARALLEL PROTECTION FLOODPROOFING OF FILMORE AVE. & MIRABEAU AVE. BRIDGES
ORLEANS PARISH, LOUISIANA

HWY. SIGN AND BARRICADE DETAILS FOR CONSTRUCTION

DESIGNED BY: JCS DRAWN BY: MJF CHECKED BY: JCS	DATE: 3-12-01	PLOT SCALE: 1"=1'	PLOT DATE: 07/30/01
	CADD FILE: 9362b95		FILE NO. H-4-44674
SUBMITTED BY: MEYER ENGINEERS, LTD. DESIGN ENGINEER	SOLICITATION NO. DACW29-01-B-0092		DWG. 95 OF 97

Safety Is a Part of Your Contract

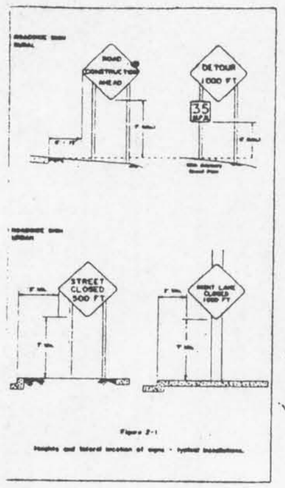

Figure 2-1

Heights and lateral location of signs - typical installations.

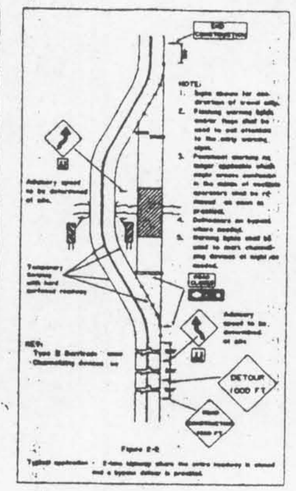

Figure 2-2

Typical application - 2-lane highway where one lane roadway is closed and a bypass detour is provided.

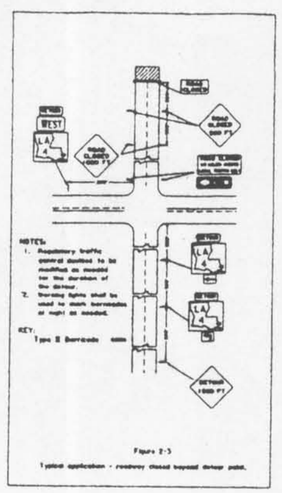

Figure 2-3

Typical application - roadway closed beyond detour point.

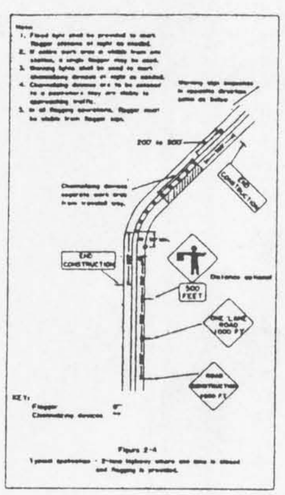

Figure 2-4

Typical application - 2-lane highway where one lane is closed and flagging is provided.

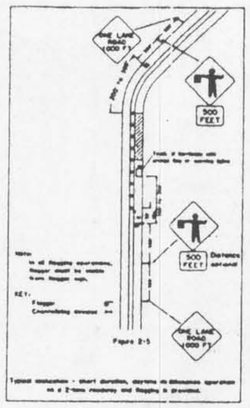

Figure 2-5

Typical applications - short duration, daytime no obtrusions operations on a 2-lane roadway and flagging is provided.

	STATE PROJECT	PARISH	SHEET NO.

NOTES:

GENERAL

1. All signs and pavement markings herein shall be in accordance with the current edition of the "Louisiana Manual on Uniform Traffic Control Devices."
2. No traffic controls shall be erected until construction work is about to begin and with the authorization of the Project Engineer.
3. Responsibility is hereby placed upon the contractor for the erection and maintenance of all markings, signs and barricades called for in these plans or required by the Project Engineer for the protection of the traveling public or construction personnel. The contractor shall also be responsible for the maintenance or refurbishing, if necessary, of all permanent signs and pavement markings that should be left in place as essential to the safe management and guidance of traffic within the limits of the project.
4. All reflectorized devices such as signs, drums, barricades, vertical panels, delineators of any type, etc., shall be cleaned or washed periodically, to maintain their effectiveness, as required by conditions or the Project Engineer.
5. Where a construction project involves a number of road segments remote from each other, only those segments where actual work is in progress shall be signed. Upon completion of any segment, construction signing shall be removed and replaced with permanent signing.
6. Where different projects are next to each other, or separated by less than one mile, they shall be considered as one project for construction signing purposes, and all advance signing at the junctions shall be eliminated, except for any signing that the Project Engineer might require due to site conditions.
7. Signs shown in all illustrations are typical and may vary with each specific condition. Other signs from sheet one (1) sheet appropriate for the specific condition may be substituted in any of the above illustrations upon approval by the Project Engineer. However, the legend number of such signs shall in general be constant.
8. Taper Length (L) Formula
   $L = \frac{S \times W}{60}$ for speed limit or 45 MPH $L = \frac{S^2 \times W}{60}$ for speed limit or 40 MPH
   where
   L = minimum length of taper
   S = numerical value of posted speed limit prior to work or 85th percentile speed
   W = Width of offset
9. Spacing of channelizing devices such as cones, panels, drums, and Type I or II barricades shall not exceed a distance in feet equal to the speed limit when used for taper channelization and a distance in feet of twice the speed limit when used for tangent channelization

PAVEMENT MARKINGS

All pavement markings in either and all or within the limits of the project that are in conflict with the project agency or the required traffic requirements shall be removed from the pavement by abrasion. If, in the opinion of the project engineer, opposed pavement markings are needed as a traffic control, as in channelization or work transitions, they shall be reflectorized, removable, temporary tape marking tape and should be accompanied by proper signs. Typical illustrations are shown in the "Louisiana Manual of Uniform Traffic Control Devices."

SIGN MATERIALS

The backing material used in the fabrication and erection of construction signs shall be in accordance with Subsection 1015.04(b) of the Standard Specifications as revised by project specifications. Signs shall normally be mounted on two posts, except speed limit signs, chevrons and other similar signs, which shall be mounted on one post. A minimum of two bolts per post shall be used.

Reflectorization of signs and barricades shall be by means of materials that conform to the requirements of Subsection 1015.05(a) of the Standard Specifications as revised by project specifications. If support posts should be removed, the spike should be no higher than 15" above the ground.

All materials and their application shall meet Department Specifications.

REMOVAL OF SIGNS

At no time shall signs warning against a particular hazard or operation be left in place when the operation is not in progress, or where the hazard has been removed. On part-time operations, signs such as "Truck Crossing", "Men Working", etc., shall be removed or set aside out of view of traffic when the operation is not in progress. When construction operations change, signing must change accordingly; all conflicting signs from previous operations must be removed or covered on new signs are erected.

COVERING OF SIGNS

Signs shall be covered with a strong, lightweight, completely opaque material, shaped or formed so as to cover all of the legend on the face of the sign. The covering shall be securely fastened so as to prevent its accidental removal by wind or other causes. The covering material shall be reflectorized and of a muted shade, or black. Burlap cloth, cardboard, or paper are not acceptable materials.

Signs that might obscure other construction signs shall be removed not covered.

LIGHTING

Lighting shall supplement all barricades that close one or more lanes or that extend across a highway. At least two high intensity lights will be used but, where the roadway ends immediately after a barricade, a minimum of four lights shall be used. Lighting shall be by approved electrical installations. Where battery operated equipment is used, it shall conform to specifications for high or low intensity, flashing or steady burning lights as set forth in subsection 1016.12 of the Standard Specifications.

1. High intensity flashing lights shall be used to mark the first and last warning sign.
2. Low intensity flashing lights shall be used to mark all other hazards off the travel way.
3. Steady burning lights shall be used on all traffic control devices used for channelization.

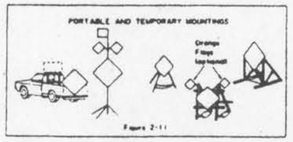

Figure 2-11

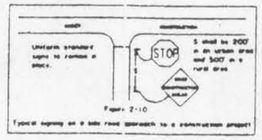

Figure 2-10

STANDARD PLAN NO.	HS-01	SHEET 2 OF 5

STANDARD PLAN
HIGHWAY SIGN AND BARRICADE DETAILS
FOR CONSTRUCTION PROJECTS

DATED

STATE OF LOUISIANA
DEPARTMENT OF TRANSPORTATION AND DEVELOPMENT

DESIGNED	A. Caluda	DETAILED	D. Bass	TRACED	W.J.M.J.
CHECKED	D. Bass	CHECKED	A. Caluda	CHECKED	
APPROVED	A. [illegible]			DATE	[illegible]

[illegible] ENGINEER

SYMBOL	DESCRIPTION	DATE	APPROVED

REVISIONS

U.S. ARMY ENGINEER DISTRICT, NEW ORLEANS
CORPS OF ENGINEERS
NEW ORLEANS, LOUISIANA

BOARD OF LEVEE COMMISSIONERS
ORLEANS LEVEE DISTRICT
NEW ORLEANS, LOUISIANA

MEYER ENGINEERS, LTD. METAIRIE, LOUISIANA

LAKE PONTCHARTRAIN, LA. AND VICINITY

HIGH LEVEL PLAN

LONDON AVE. OUTFALL CANAL, PARALLEL PROTECTION FLOODPROOFING OF FILMORE AVE. & MIRABEAU AVE. BRIDGES

ORLEANS PARISH, LOUISIANA

HWY. SIGN AND BARRICADE DETAILS FOR CONSTRUCTION

DESIGNED BY: JCS	DATE: 3-12-01	PLOT SCALE: 1"=1'	PLOT DATE: 07/30/01
DRAWN BY: MJF			
CHECKED BY: JCS	CADD FILE: 9382b06		FILE NO. H-4-44674
SUBMITTED BY: MEYER ENGINEERS, LTD. DESIGN ENGINEER	SOLICITATION NO. DACW29-01-B-0092		DWG. 96 OF 97

VALUE ENGINEERING INCENTIVE CLAUSES YOUR KEY TO HIGHER PROFITS

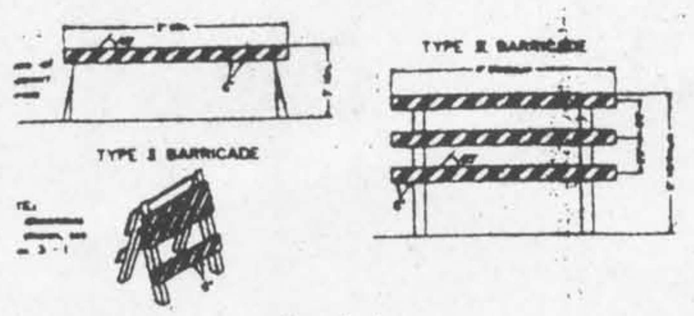

Figure 3 - 1
Standard Barricades

Table 3 - 1
Barricade Characteristics

Types	I	II	III
Minimum Width of Rail	8 in.	8 in.	8 in.
Maximum Width of Rail	12 in.	12 in.	12 in.
Minimum Length of Rail	2 ft.	2 ft.	4 ft.
Width of Stripes**	6 in.	6 in.	6 in.
Minimum Height	3 ft.	3 ft.	5 ft.
Number of Reflectorized Rails facing one direction of traffic	1	2	3

[illegible]

Figure 3 - 4

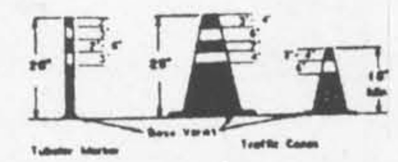

Figure 3 - 6

	STATE PROJECT	PARISH	SHEET NO.

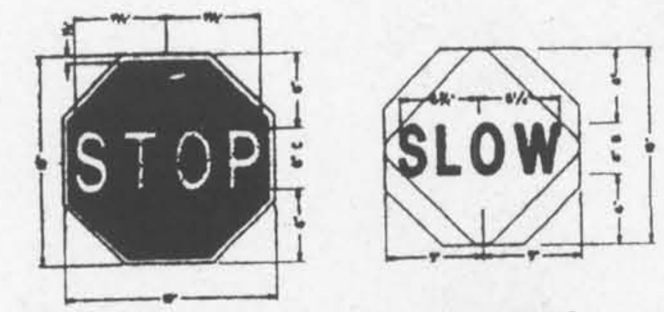

Background - Red
Borders - White
Legend - 6" series C
To be made of 0.08 aluminum
or 0.04 tempered aluminum

Background - Orange (reflectorized)
Area outside diamond - Black or Light Blue
Legend - 6" series D
To be made of 0.08 aluminum
or 0.04 tempered aluminum

Figure 3 - 7
Details of hand sign

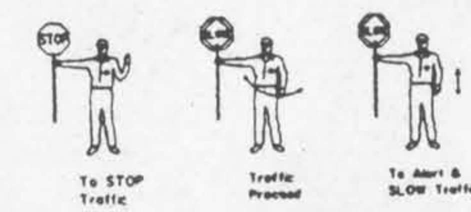

Figure 3 - 9
Use of Hand Sign

Barricade Design

[illegible]

Barricade Application

[illegible]

Drum Design

[illegible]

Drum Application

[illegible]

Tubular Marker Design

[illegible]

Tubular Marker Application

[illegible]

Use of hand signalling devices by Flagger

[illegible]

The following standard procedure shall be followed by flaggers:

[illegible]

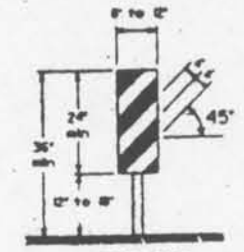

Figure 3 - 5

Cone Design

[illegible]

Cone Application

[illegible]

Vertical Panel Design

[illegible]

Vertical Panel Application

[illegible]

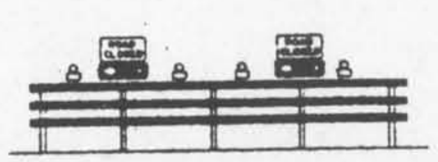

Figure 3 - 2
Barricade closing a road

[illegible]

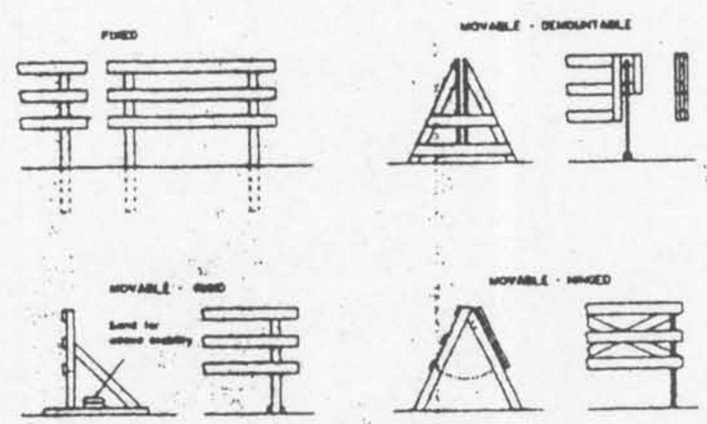

Figure 3 - 3
Type III barricade construction - Typical examples

STANDARD PLAN NO.	HS-01	SHEET 3 OF 3

STANDARD PLAN
HIGHWAY SIGN AND BARRICADE DETAILS
FOR CONSTRUCTION PROJECTS
DATED:

STATE OF LOUISIANA
DEPARTMENT OF TRANSPORTATION AND DEVELOPMENT

DESIGNED A. Courrau	DETAILED D. Brady	TRACED
CHECKED C. Brady	CHECKED A. Courrau	CHECKED

APPROVED ... CHIEF ENGINEER DATE 9/18/99

DATE	DESCRIPTION	BY / APPROVED
	Recreated and update to 1993 standard...	

REVISIONS

SYMBOL	DESCRIPTION	DATE	APPROVED

REVISIONS

U.S. ARMY ENGINEER DISTRICT, NEW ORLEANS
CORPS OF ENGINEERS
NEW ORLEANS, LOUISIANA

BOARD OF LEVEE COMMISSIONERS
ORLEANS LEVEE DISTRICT
NEW ORLEANS, LOUISIANA

MEYER ENGINEERS, LTD. METAIRIE, LOUISIANA

LAKE PONTCHARTRAIN, LA. AND VICINITY
HIGH LEVEL PLAN
LONDON AVE. OUTFALL CANAL, PARALLEL
PROTECTION FLOODPROOFING OF
FILMORE AVE. & MIRABEAU AVE. BRIDGES
ORLEANS PARISH, LOUISIANA

HWY. SIGN AND BARRICADE DETAILS
FOR CONSTRUCTION

DESIGNED BY: JCS DRAWN BY: MJF CHECKED BY: JCS	DATE: 3-12-01	PLOT SCALE: 1"=1'	PLOT DATE: 07/30/01
SUBMITTED BY: MEYER ENGINEERS, LTD. DESIGN ENGINEER	CADD FILE: 9362b97		FILE NO. H-4-44674
	SOLICITATION NO. DACW29-01-B-0092		DWG. 97 OF 97

Safety is a Part of Your Contract

VALUE ENGINEERING INCENTIVE CLAUSES YOUR KEY TO HIGHER PROFITS