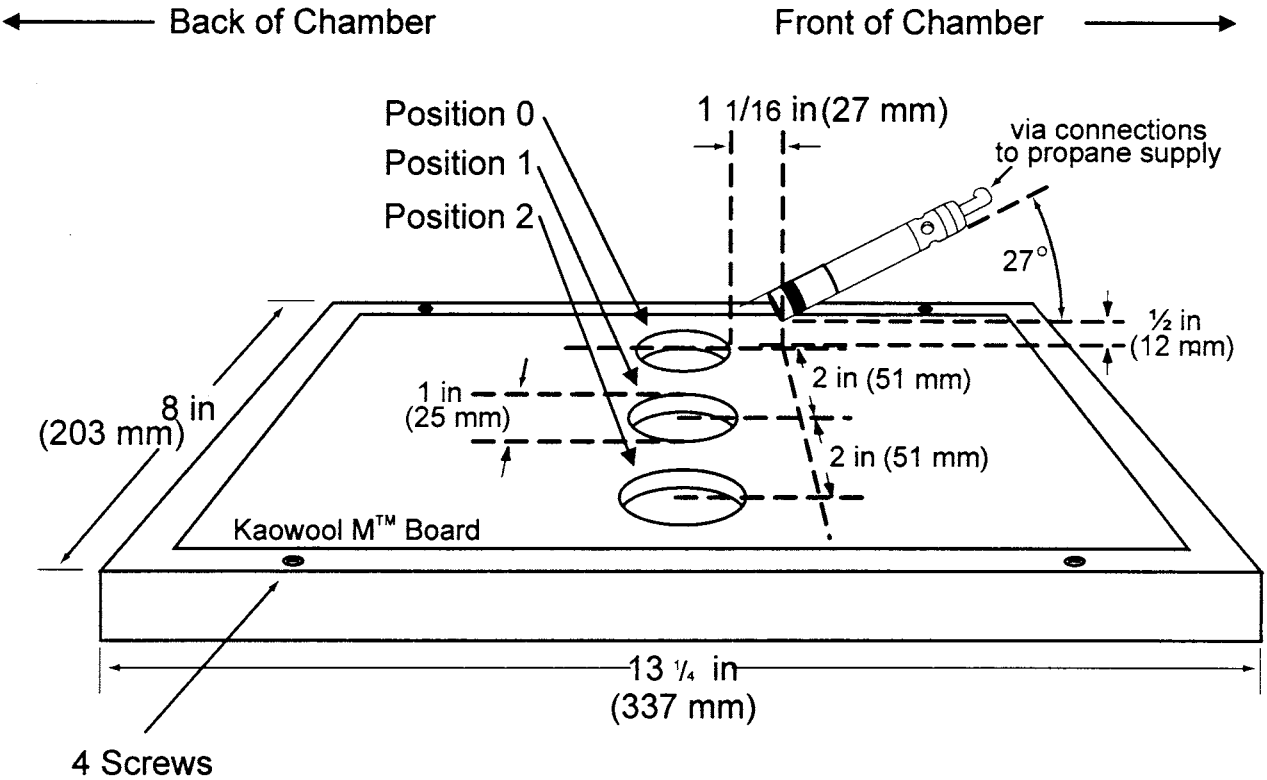

Figure 7 - Calorimeter Holding Frame