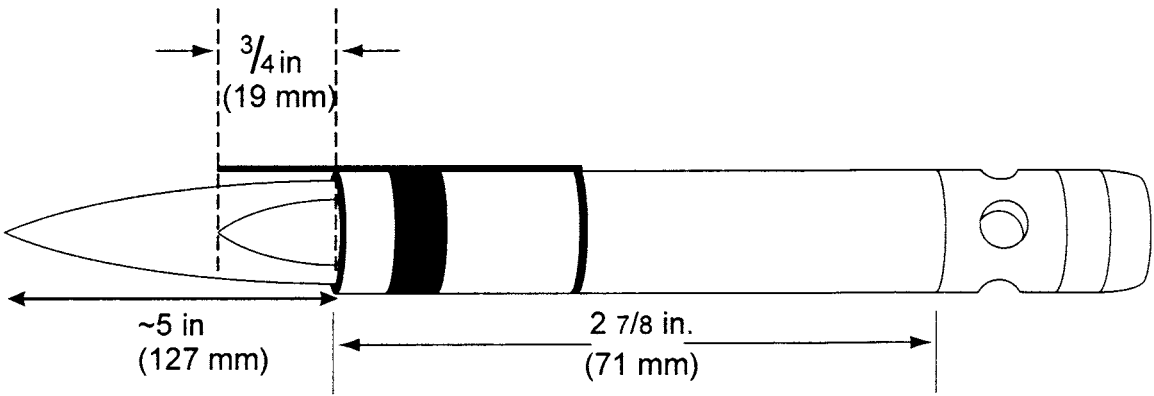

Figure 6 – Propane Pilot Burner