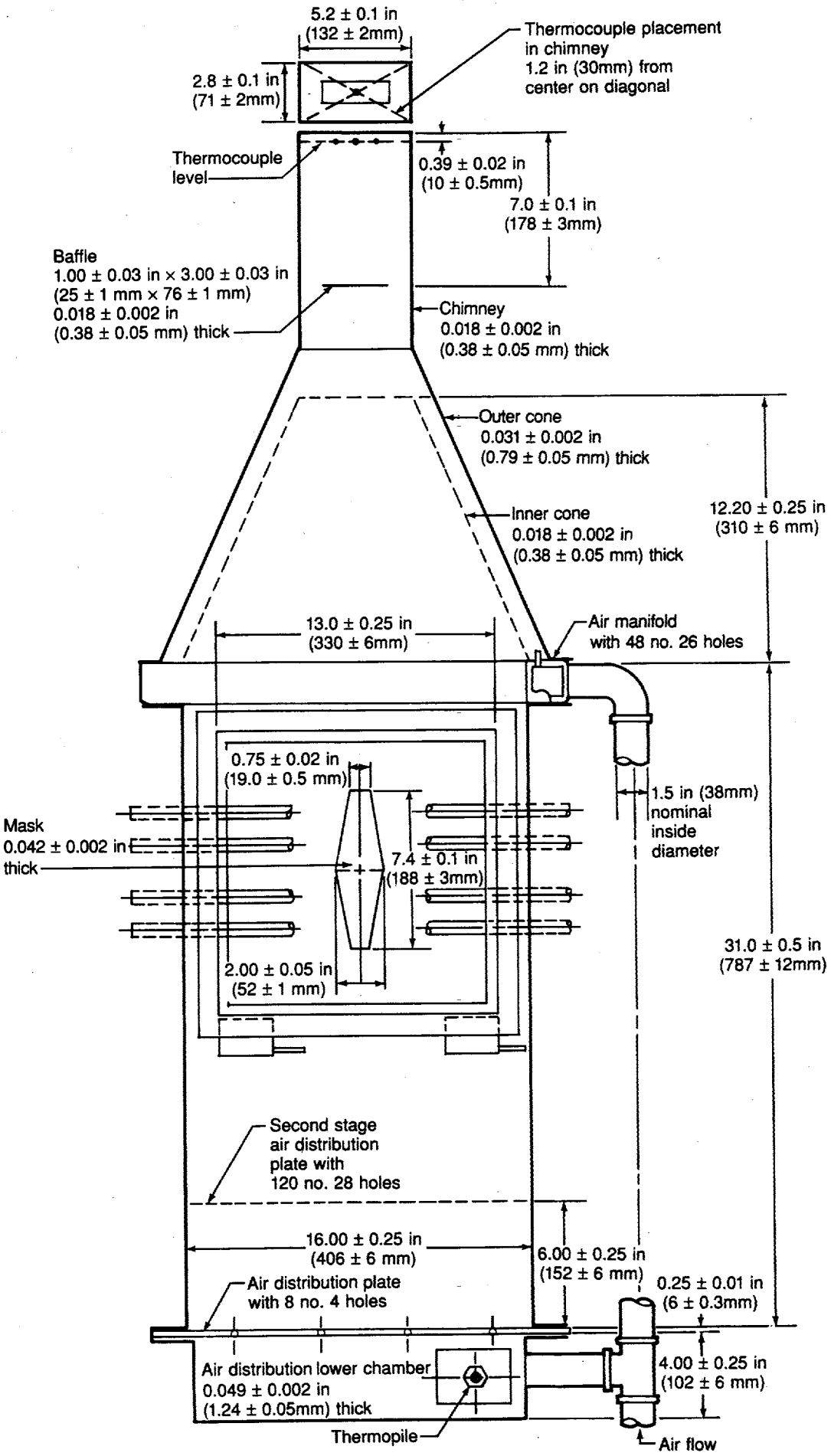

Figure 1A Rate of Heat Release Apparatus