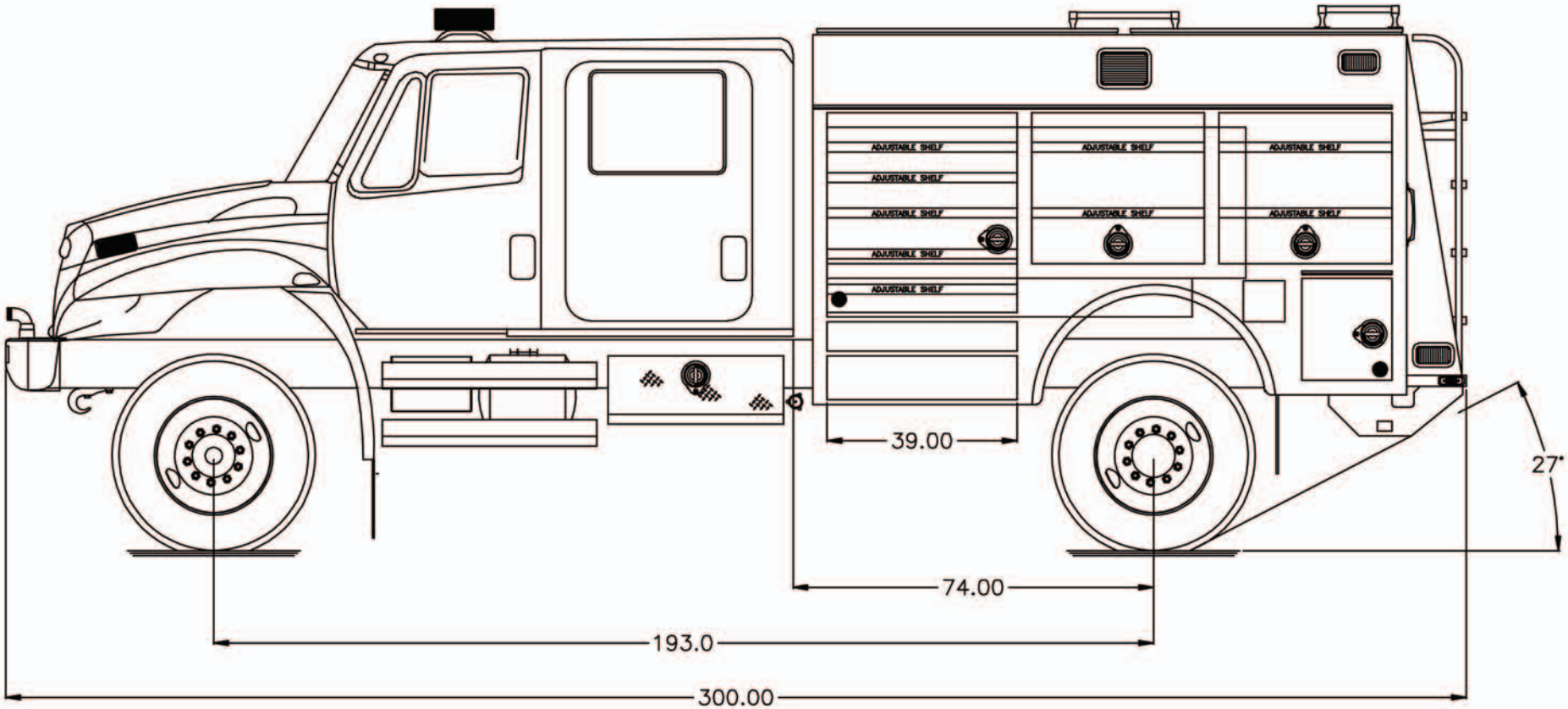

USDA FOERST SERVICE MODEL 346

DATE
FEB09