BRAC 2005
EDUCATION AND TRAINING JOINT CROSS-SERVICE GROUP
MEETING MINUTES OF JANUARY 27, 2005

The Principal Deputy Under Secretary of Defense (P&R), Mr. Charles Abell, chaired the 44th meeting of the E&T JCSG. Attendee List is at Attachment 1. The following is a summary of the discussions (Briefing slides at Attachment 2):

- The Flight Training Subgroup (RADM Mayer) briefed seven scenarios for E&T JCSG consideration. RADM Mayer began by stating the COBRA analysis did not include any MILCON cost avoidance dollars (Note: directed in the OSD BRAC Policy Memo #3 – Selection Criteria 5 (COBRA), page 6, which discusses Military Construction Cost Avoidances.) Additionally, to account for efficiencies associated with consolidation, the subgroup reduced Military and Civilian Personnel manpower authorizations by 5% and 10% respectively (unless Service projected a greater reduction) for joint flight training units. The Navy accounted for contractor losses/gains; however, the Air Force did not report contractor losses/gains. Some of the Criteria 6 data is still missing for impacted installations. In response to Scenario Data Calls, the Air Force automatically added new support billets for installations that gained additional missions. However, the subgroup recommended and the Principals agreed to <u>not</u> allow these increases and to limit manpower increases/decreases to existing authorizations. The Principals allowed estimated dollar savings for facilities vacated at Moody AFB and Randolph AFB and agreed to review all Service-requested MILCON. There were no significant issues regarding Criterion 7 & 8. The Principals agreed with the Subgroup's assumptions and military judgment used during the analysis of the scenarios. The E&T JCSG:
  - ***Deactivated E&T JCSG scenario 0006, "Rotary Wing Consolidation at Fort Rucker."*** This scenario would place all URT in a Center of Excellence, but would not uncover an installation unless coupled with Navy scenario 0152. This scenario showed poor payback. Further, this action is embedded as part of E&T 0046 and will be considered as part of that scenario.
  - ***Deactivated E&T JCSG scenario 0044, "Status Quo #1 DON: Consolidate Navy Undergraduate Pilot Training."*** Synergy may permit smaller fleet of training aircraft. However, it does not enhance joint-ness and is contingent on approval of Navy Scenario 0152 and disapproval of E&T JCSG 0046.
  - ***Deactivated E&T JCSG scenario 0045, "Status Quo #2 USAF: Consolidate Air Force Undergraduate Pilot Training and CSO Flying Training Programs and Relocate the Pilot Instructor Flying Training Program."*** This scenario would not enhance joint-ness and it has a long pay-back period.
  - ***Approved E&T JCSG Scenario 0046, "Cooperative: Realign and Consolidate DOD Undergraduate Pilot and NAV/NFO/CSO Training."***

This scenario offers a short pay back period and enhances joint-ness. The subgroup was tasked to insert the latest numbers and provide a slide that explains the payback, synergy and consolidation of flight training by pipeline tracts. The Principals also recommended a map of the US that illustrates flight training end results.

- ***Approved E&T JCSG Scenario 0052, "Joint Strike Fighter (JSF) Flying Training Center "Stand Alone" Option (Eglin AFB)."*** The scenario was strategy-based and focused on military value scores to determine the best basing options. JSF is a new mission and costs and savings are not easily adaptable to the BRAC COBRA Model. The Subgroup notionally sourced personnel from Luke AFB and NAS Oceana to establish a reasonable COBRA baseline for moving costs. The USAF and DON position is bed-down of the initial JSF base would not require commensurate draw down at existing graduate level flight training bases.
- ***Deactivated E&T JCSG scenarios 0049, "DOD/USG UAV Center of Excellence (Fort Rucker)" and 0050, "DOD/USG UAV Center of Excellence (Indian Springs AF Aux*).**" It was the opinion of the E&T JCSG, based on the Subgroup analysis, that UAV training is not sufficiently developed to be able to define a common curriculum or to be able to identify an installation that meets all Services' requirements. Training requirements for each of the Services is too specialized to consider joint training efficient or effective; however, there may be efficiencies from an RDT&E perspective. These two scenarios along with appropriate data will be forwarded to the Technical JCSG for review and action (if desired).

- The Specialized Skill Training Subgroup (Brig Gen Hostage) briefed an updated candidate recommendation timeline and presented five Navy scenarios under E&T JCSG "over watch" and four E&T JCSG scenarios for deliberation (Attachment 2). The E&T JCSG:
  - ***Approved DON-0032, "Close Naval Station Ingleside, TX (Naval Station San Diego, CA)" and 0033, "Close SUBASE New London, CT (Naval Station Norfolk, VA and Kings Bay, GA)"*** based on Navy analysis and recommendation. Agreed with Navy deactivation of alternative scenarios DON-0003, "Close Naval Station Ingleside, TX (San Diego, CA or Little Creek, VA); DON-0031, "Close Naval Station Ingleside, TX (San Diego, CA or Mayport, FL);" and, DON-0034, "Close SUBASE New London, CT (Naval Station Norfolk, VA)."
  - ***Deactivated E&T JCSG 0056, "Joint Strike Fighter Maintenance Training Center (MTC) (Sheppard AFB, TX).***
  - ***Deactivated E&T JCSG 0057, "Joint Strike Fighter Maintenance Training Center (MTC) (Pensacola, FL).***

- ***Approved consolidation E&T JCSG 0055, "Joint Strike Fighter Integrated Training Center (ITC) (Eglin AFB, FL) with E&T JCSG 0052, "Joint Strike Fighter (JSF) Flying Training Center "Stand Alone" Option (Eglin AFB)."***
    - ***Directed SST to provide data for FT to update analysis and include in the final candidate recommendation package for legal and ISG review.***
    - ***Tasked FT to rename candidate recommendation to include maintenance training into an Initial Training Site.*** *(Note: Intent is to establish initial maintenance training element with the bed down of the initial cadre of JSF aircraft at Eglin (FTU), but not to endorse the concept of a Maintenance Training Center or Integrated Training Center at Eglin AFB, FL. This might not be consistent with the guidance provided in the Aldrich 19 May 2003 Memorandum due to differing interpretations.)*
- ***The E&T JCSG delayed decision on E&T JCSG Scenario 0041 "Consolidated Navy/Marine Crypto/Intelligence Training at Dam Neck, VA."*** Requested Navy information (Navy BRAC-office through the Navy Principal) is still pending.

The next scheduled meeting of the E&T JCSG is Wednesday, February 2, 2005.

Approved: _____
Charles S. Abell
Principal Deputy Under Secretary of Defense
(Personnel & Readiness)
Chairman, Education & Training
Joint Cross-Service Group

Attachments:
1. List of Attendees, January 27, 2005
2. Briefing Slides

Copies:
1. OSD BRAC Office
2. E&T JCSG Coordination Team
3. DoD IG

BRAC 2005
EDUCATION AND TRAINING JOINT CROSS-SERVICE GROUP
January 27, 2005

Attendees

Members:

- Hon Charles S. Abell, Principal Deputy Under Secretary of Defense (Personnel & Readiness) Chair
- Mr. Michael L. Dominguez, Assistant Secretary of the Air Force (Manpower and Reserve Affairs)
- BG Tom Maffey, USA, JCS VDJ-7
- BGen Thomas Conant, USMC, Deputy Director, Training and Education Command
- Mr. Jim Gunlicks, USA, Army G-3 (DAMO-TR)
- CAPT Bill Wilcox, USN, N1D

Others:

- Dr. Paul Mayberry, Deputy Under Secretary of Defense for Readiness
- Mr. Bob Howlett, E&T JCSG Coordination Team
- Ms. Nancy Weaver, E&T JCSG Coordination Team
- Ms. Marsha Warren, Ctr., E&T JCSG Coordination Team
- RADM George Mayer, USN, Chairman, Flight Training Subgroup
- Col Mike Massoth, USMC, Deputy Director, Training and Education Command
- Col Joanna Shumaker, USAF, AF DPX
- CAPT Gene Summerlin, USN, NAVY BRAC, Flight Training Subgroup
- Col Jimmie Simmons, USAF, AETC/DOR, Flight Training Subgroup
- Mr. Steve Belcher, USN, Flight Training Subgroup
- Mr Bob Harrison, USA, G3 Training
- Brig Gen Hostage, USAF, Chairman, Specialized Skill Training Subgroup
- Col James Briggs, USAF, AETC/DOO, Specialized Skill Training Subgroup
- CAPT Cathy Osman, USN, JCS/J-7, PDE Subgroup
- Mr. Brian Buzzell, OSD BRAC Contract Support
- Ms. Beth Schaefer, DODIG
- Capt Ernest Wearren, USAF, AF-BRAC Office
- LCDR Greg Riels, USN, RADM Mayer Aide
- Col D.W. Blan, USAF, AF/XOO, Flight Training Subgroup
- CDR Mark Horn, USN, Flight Training Subgroup
- Mr Gene Peay, USN, Flight Training Subgroup

Attachment 1

Education & Training
Joint Cross Service Group
Flight Training Subgroup

Proposals

For

Candidate Recommendations that would Realign

Joint Undergraduate Flying Training Functions

BRAC 2005

Draft Deliberative Document –For Discussion Purposes Only –Do Not Release Under FOIA

FT SUBGROUP Scenario Timeline

Track Number	Scenario	SDC at MilDep	SDC at Activity	MilDep to JCSG	Initial COBRA Review	JCSG COBRA OK	Criteria 6&7	Criteria 8	Legal Rev	JCSG Final Approval
0006	Helos to Rucker	29 Nov	02 Dec	29 Dec	05 Jan		27 Jan			
0044	Navy Status Quo	01Dec	08 Dec	14 Dec	4 Jan		27 Jan			
0045	AF Status Quo	01Dec	08 Dec	10 Jan	12 Jan		27 Jan			
0046	Cooperative	29 Nov	02 Dec	10 Jan	12 Jan		27 Jan			
0047	JSF to Columbus	03 Dec	08 Dec	11 Jan	13 Jan	Deactivated 14 Jan				
0048	JSF to Kingsville	03 Dec	08 Dec	11 Jan	13 Jan	Deactivated 14 Jan				
0049	UAV CoE at Ft Rucker	07 Dec	13 Dec	14 Jan	18 Jan		27 Jan			
0050	UAV CoE at Indian Sprgs	07 Dec	13Dec	26 Jan	26 Jan		27 Jan			
0052	JSF at Eglin	07 Dec	13 Dec	24 Jan	25 Jan		27 Jan			

Draft Deliberative Document –For Discussion Purposes Only –Do Not Release Under FOIA

E&T JCSG-FT Scenarios

Undergraduate Flight Training

- 0006 – Rotary Wing Consolidation at Ft Rucker
  - Would place all URT in Center of Excellence
  - Would NOT "uncover" an installation
  - Also in E&T 0046, Joint Cooperative Option

- 0044 – Status Quo #1 DON
  - Would Consolidate DoN-owned UFT, URT, & NFO Training
  - Would "Uncover" NAS Whiting Field

- 0045 – Status Quo #2 USAF
  - Would consolidate USAF-owned UFT & UNT
  - Would "Uncover" Moody and Randolph AFBs

- 0046 – Joint Cooperative
  - Would consolidate DoD UFT, URT, & UNT/NFO (CSO) Training
  - Would place URT at Ft Rucker (E&T 0006)
  - Would "Uncover" NAS Whiting, Moody AFB, & Randolph AFB

E&T JCSG-FT Scenarios

Undergraduate Flight Training

- 0049 – UAV #1 CoE at Fort Rucker
  - Would consolidate entry-level training now at Beale AFB, NAS Pensacola, Fort Huachuca, and Indian Springs AFS

- 0050 – UAV #2 CoE at Indian Spring AFS
  - Would consolidate entry-level training now at Beale AFB, NAS Pensacola, and Fort Huachuca

Graduate Flight Training

- 0052 – JSF Stand Alone Joint FTU/FRS at Eglin AFB
  - Notional Moving Cost … Personnel Sourced from Luke AFB & NAS Oceana to establish reasonable baseline for moving cost(s)
  - USAF position: Beddown would not require commensurate drawdown
  - MILCON estimate based on FYDP developed by JPO to capture “worse case” funding required for mission stand up … Economies after SATAF?
  - Cost Estimates for Flying Training Center only … ITC / MTC under “separate cover”

E&T JCSG-FT Scenarios

General Comments

1. Funding.
   a. All dollar figures in this presentation in $Million
   b. JSF MILCON projections NOT adjusted for funding wedges in FYDP
2. Manpower:
   a. To account for efficiencies associated with consolidation, recommend JCSG reduce Military and Civilian Personnel manpower authorizations by 5% and 10% respectively (unless Service projects a greater reduction) for joint units.
   b. Contractors. USN accounted for Contractor Losses/Gains but USAF did not report Contractor Losses/Gains … resolution to Criteria 6 data underway
   c. USAF Scenario Data Call responses would add new billets for installations that gain missions – recommend JCSG not allow these increases and limit manpower increases/decreases to existing authorizations
3. Facilities. Recommend JCSG accept estimated dollar savings for facilities vacated at Moody and Randolph AFB in E&T Scenarios 0045 & 0046.
4. MILCON. Recommend JCSG not accept/endorse all Service-requested MILCON
5. Criteria 7 & 8. *NO* significant Issues regarding Criteria 7 & 8 thus far (Services presently working detailed EIS)

E&T Scenario 0006

Consolidate Rotary Wing Phase of Undergraduate Flight Training at Fort Rucker

Draft Deliberative Document –For Discussion Purposes Only –Do Not Release Under FOIA

Draft Deliberative Document –For Discussion Purposes Only –Do Not Release Under FOIA

Number: E&T-0006

Title: Rotary Wing Consolidation at Fort Rucker

Scenario	Drivers/Assumptions
▪ Realign Fort Rucker by establishing a DoD Undergraduate Rotary-wing Flight Training Center of Excellence ▪ Gain: Fort Rucker ▪ Lose: NAS Whiting Field	▪ Principles: Organize and Train ▪ Transformational Options: Establish Centers of Excellence for Joint of Inter-service education and training by combining or co-locating like schools ▪ Establish "joint" officer training (initial skill, skill progression & functional)
Justification/Impact	**Potential Conflicts**
▪ Establishes baseline for Inter-service Training Review Organization ▪ Eliminates Redundancy ▪ Postures for joint acquisition of Services' undergraduate program replacement aircraft	▪ Unique service training standards and culture ▪ Requires MILCON funding

Approval Date: 16 Sep 04

Approved___X___ Disapproved_____ Revised_____ Deferred_____

Draft Deliberative Document –For Discussion Purposes Only –Do Not Release Under FOIA

Scenario Description

- **Action 1:** Establish a tenant command (Joint Rotary Wing Training Command (JRWTC)) at Fort Rucker to conduct all Undergraduate Rotary Wing Flight Training across all three services and appropriate USG contracts.

- **Action 2:** Consolidate Fort Rucker's 1st Aviation and Aviation Training Brigades (disestablish 1st Aviation Brigade and the Aviation Training Brigade) to form a new JRWTC. Consolidate all DoD owned Training Activities into the newly consolidated organization.

- **Action 3:** Relocate and consolidate NAS Whiting Field's Rotary Wing Training Air Wing FIVE, HT-8, and HT-18 with JRWTC.

- **Action 4:** Consolidate Fort Rucker's USAF tenant (58th Special Operations Wing's 23rd Flying Training Squadron) with JRWTC.

Draft Deliberative Document –For Discussion Purposes Only –Do Not Release Under FOIA

Candidate E&T 0006

Candidate Recommendation: Realign Fort Rucker, Alabama by establishing a DoD Undergraduate Rotary-wing Flight Training Center of Excellence. Relocate HT-8, HT-18, and Helicopter Instructor Training for Undergraduate Rotary-wing program assigned to Training Wing 5 (TRAWNG 5), NAS Whiting Field, Florida to Fort Rucker. Consolidate TRAWNG 5, the U.S. Army's 1st Aviation Brigade and the U.S. Air Force 58th Special Operations Wing's 23rd Flying Training Squadron to establish a single DoD Rotary Wing Undergraduate Flight Training Center of Excellence.

Justification

- ✓ Establishes baseline with Inter-service Training Review Organization
- ✓ Eliminates redundancy
- ✓ Postures for joint acquisition of Services' undergraduate program replacement aircraft

Military Value

- ✓ Reduction: Loss of any facility reduces Capacity and Military Value
- ✓ MVA Scores:
  - ✓ Fort Rucker 75.54
  - ✓ NAS WF (RW) 63.26

Payback

✓ One-time cost	$36.53M
✓ MILCON	$31.01M
✓ NPV	$23.80M
✓ Break Even Year	100+
✓ Steady State	$-0.90M
✓ Mil/Civ Reductions	10/03
✓ Mil/Civ/Student Relocate	196/29/405

Impacts

- ✓ Criteria 6
  - Job Loss: 13 Direct / 340 Indirect
- ✓ Criteria 7 - No Issues
- ✓ Criteria 8 - No Issues

✓Strategy	✓Capacity Analysis / Data Verification	❑ JCSG/MilDep Rec'd	✓De-conflicted w/JCSGs
✓COBRA	✓Military Value Analysis / Data Verification	✓ Criteria 6-8 Analysis	✓ De-conflicted w/MilDeps

Draft Deliberative Document –For Discussion Purposes Only –Do Not Release Under FOIA

Scenario E&T 0006
Consolidate Rotary Wing Phase of Undergraduate Flight Training at Fort Rucker

Criterion 5 – COBRA

27 January 2005

Draft Deliberative Document –For Discussion Purposes Only –Do Not Release Under FOIA

ROI Summary

Scenario	One-Time Costs	Steady-State Savings	ROI Years	20 Yr NPV	Billets Eliminated (Mil/Civ)	Total MILCON
E&T 0006	**$36.53**	**$0.90**	**100+**	**$23.80**	**10/3**	**$31.01**

Notes:

- Driver: MILCON at Fort Rucker
- E&T 0006 does not close NAS Whiting Field because URT is not the predominant training function hosted at this installation.
- Should NAS Whiting close from another action, ROI for this proposal would be immediate.

Disposition of Billets/Positions

Scenario		OFF	ENL	CIV	STU	TOT
E&T 0006	Eliminate	8	2	3		13
	Move	164	32	29	405	630

One-Time Costs Summary

Scenario	Const	Pers	Ovhd	Move	Other	Total Costs	Svgs	Net Costs
E&T 0006	$31.01	$0.24	$2.14	$1.34	$1.80	$36.53	$0.74	$35.79

Draft Deliberative Document –For Discussion Purposes Only –Do Not Release Under FOIA

MILCON Summary

Scenario: E&T 0006	Ft Rucker			
Construction FAC Description	UM	New	Rehab	Cost
Aircraft MX Hangar	SF	114.4		21.09
Aircraft Corrosion Control Hangar	SF	1.7		0.43
Flight Simulator Facility	SF	37.5		6.50
Admin Building	SF	22.9		2.99
Total				31.01

Draft Deliberative Document –For Discussion Purposes Only –Do Not Release Under FOIA

Recurring Costs / Savings Summary

Recurring Costs / Savings FY 06-FY11						
Scenario	O&M	Mil Pers	Other	Total Costs	Svgs	Net Costs
E&T 0006	$9.68	$7.06	$0.00	$18.38	$21.61	$ -3.23

Key Elements of Savings

Scenario: E&T 0006		
Element	**Description**	**Total Net Savings FY06 - FY11**
Military Salaries	**8 Officer/2 Enlisted billets eliminated**	**$5.20**
Sustainment	**Reduced Overhead**	**$1.20**

Scenario E&T 0006
Consolidate Rotary Wing Phase of Undergraduate Flight Training at Fort Rucker

Criterion 6 – Economic Impact

27 January 2005

Draft Deliberative Document –For Discussion Purposes Only –Do Not Release Under FOIA

C6 – Employment Change

Base	Direct Loss/Gain	Indirect Loss/Gain	Total Loss/Gain	% of ROI Employment
NAS Whiting Field	-893	-1091	-1984	-0.94%
Fort Rucker	880	751	1631	3.39%
Aggregate	-13	-340	-353	

Other Points to Ponder

- **NAS Whiting Field**
  - **Not a "Closure" Scenario unless coupled with Scenario DoN 0152**

Payback

✓ One-time cost	$36.53M
✓ MILCON	$31.01M
✓ NPV	$23.80M
✓ Break Even Year	100+
✓ Steady State	$-0.90M
✓ Mil/Civ Reductions	10/03
✓ Mil/Civ/Student Relocate	196/29/405

FT Subgroup Recommendation:

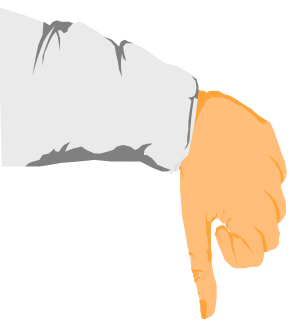

E&T Scenario 0044

Status Quo DON: Consolidate (Naval) Undergraduate Pilot Training

Draft Deliberative Document –For Discussion Purposes Only –Do Not Release Under FOIA

Draft Deliberative Document –For Discussion Purposes Only –Do Not Release Under FOIA

Number: E&T-0044

Title: Status Quo #1 DoN: Consolidate Undergraduate Pilot Training

Scenario	Drivers/Assumptions
▪ Realign NAS NAS Whiting Field by relocating and consolidating DoN Undergraduate Pilot Training at NAS Corpus Christi, NAS Kingsville, NAS Meridian, and NAS Pensacola ▪ Gain: NAS Corpus Christi (T-34) NAS Kingsville (T-45) NAS Meridian (T-34, T-6) NAS Pensacola (TH-57) ▪ Lose: NAS Whiting Field (T-34, TH-57) NAS Meridian (T-45)	▪ Principles: Organize and Train ▪ Assumption: Control of airspace and outlying fields associated with Whiting Field will be transferred to appropriate DoD authorities
Justification/Impact	**Potential Conflicts**
▪ Reduces excess infrastructure	▪ Requires MILCON

Approval Date: 18 Nov 04

Approved___X___ Disapproved_____ Revised_____ Deferred_____

Draft Deliberative Document –For Discussion Purposes Only –Do Not Release Under FOIA

Scenario Description

- **Action 1**: Relocate NAS Whiting Field's Undergraduate Primary Pilot Training function to NAS Corpus Christi, TX and NAS Meridian for approximately 186 (Corpus Christi) and 700 (Meridian) graduates per year.

- **Action 2**: Relocate NAS Whiting Field's Undergraduate Rotary-Wing Pilot Training function to NAS Pensacola for approximately 617 graduates per year. Retain and transfer control of required Outlying Fields (NOLF Harold, NOLF Pace, NOLF Santa Rosa, NOLF Site 8, and NOLF Spencer) to support relocated Rotary Wing training at NAS Pensacola.

- **Action 3**: Relocate NAS Meridian's Undergraduate Strike Pilot Training function to NAS Kingsville, TX for approximately 180 graduates per year.

Candidate E&T 0044

Candidate Recommendation: Status Quo #1 DON: Consolidate (Naval) Undergraduate Pilot Training. Realign NAS Whiting Field, FL, by relocating and consolidating DON Undergraduate Pilot Training at NAS Corpus Christi, TX, NAS Kingsville, TX, NAS Meridian, MS, and NAS Pensacola, FL.

Justification

- ✓ Establishes baseline with Inter-service Training Review Organization
- ✓ Eliminates redundancy

Military Value

- ✓ Reduction: Loss of any facility reduces Capacity and Military Value
- ✓ MVA Scores:

✓ NAS Pensacola	69.20
✓ NAS Meridian	63.94
✓ NAS Whiting Field (FW)	63.61
✓ NAS Kingsville	63.34
✓ NAS Corpus Christi	61.89
✓ NAS Whiting Field (RW)	63.26

Payback

✓ One-time cost	$111.80M
✓ MILCON	$92.46M
✓ NPV (Function)	$-30.90M
✓ Payback/Break Even Year	10+/2017+
✓ Steady State	$-5.60M
✓ Mil/Civ Reductions	25/09
✓ Mil/Civ/Student Relocate	456/80/999

Impacts

- ✓ Criteria 6 –
  Job Loss: 13 Direct / 265 Indirect
- ✓ Criteria 7 - No Issues
- ✓ Criteria 8 - No Issues

✓Strategy	✓Capacity Analysis / Data Verification	❑ JCSG/MilDep Rec'd	✓De-conflicted w/JCSGs
✓COBRA	✓Military Value Analysis / Data Verification	✓ Criteria 6-8 Analysis	✓ De-conflicted w/MilDeps

Status Quo: DON

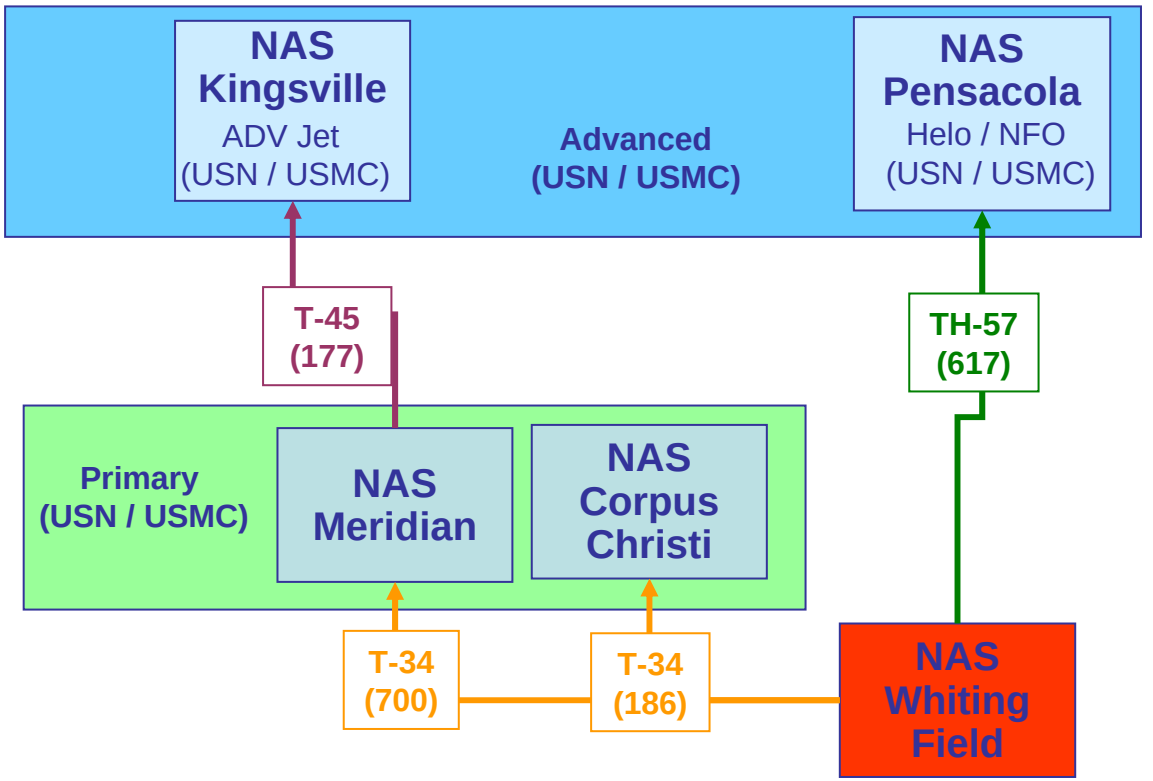

- Primary
- NFO/Navigator/PIT
- Helicopter
- Fighter/Bomber/Strike/Maritime
- Tanker/Airlift/Multi-engine

Realign and consolidate DON Undergraduate Pilot and NFO Training

Scenario E&T 0044
Status Quo DON: Consolidate (Naval) Undergraduate Pilot Training

Criterion 5 – COBRA

27 January 2005

ROI Summary

Scenario	One-Time Costs	Steady-State Savings	ROI Years	20 Yr NPV	Billets Eliminated (Mil/Civ)	Total MILCON
E&T 0044	$111.80	$-5.60	10	$-30.90	25/09	$92.46
W/Closure	$123.57	$-62.21	IMMEDIATE	$-749.75	465	$92.36

Note:

- Scenario DoN 152 would relocate remaining assets from NAS Whiting Field to permit closure.

Draft Deliberative Document –For Discussion Purposes Only –Do Not Release Under FOIA

Disposition of Billets/Positions

Scenario		OFF	ENL	CIV	STU	TOT
E&T 0044	Eliminate	22	03	09		34
	Move	422	34	80	999	1,535

Draft Deliberative Document –For Discussion Purposes Only –Do Not Release Under FOIA

One-Time Costs Summary

Scenario	Const	Pers	Ovhd	Move	Other	Total Costs	Svgs	Net Costs
E&T 0044	$92.46	$0.49	$7.97	$4.12	$6.76	$111.80	$63.83	$47.97

MILCON Summary

Scenario: E&T 0044 – DoN Status Quo	Totals
Installation	
NAS Corpus Christi	21.11
NAS Kingsville	37.52
NAS Meridian	1.91
NAS Pensacola	31.92
Total	92.46

Recurring Costs/Savings Summary

Recurring Costs/Savings FY06-FY11 ($M)						
Scenario	O&M	Mil Pers	Other	Total Costs	Svgs	Net Costs
E&T 0044	$24.53	$11.79	$36.32	$148.12	$128.13	$19.99

Key Elements of Savings

Scenario: E&T 0044		
Element	**Description**	**Total Net Savings FY06 - FY11**
Military Salaries	**Eliminates 25 billets**	**$13.49**

Scenario E&T 0044
Status Quo DON: Consolidate (Naval) Undergraduate Pilot Training

Criterion 6 – Economic Impact

27 January 2005

C6 – Employment Change

Base	Direct Loss/Gain	Indirect Loss/Gain	Total Loss/Gain	% of ROI Employment
NAS Whiting Field	-1850	-2228	-4078	-1.94%
NAS Corpus Christi	325	372	697	0.31%
NAS Meridian	193	165	358	0.66%
NAS Pensacola	861	1051	1912	0.91%
NAS Kingsville	458	375	833	5.67%
Aggregate	-13	-265	-278	

Other Points to Ponder

- General
  - Synergy may permit smaller fleet of training aircraft
  - T-34 to T-6 transition pending (accelerate acquisition of T-6)
- NAS Whiting Field
  - Not a "Closure" Scenario unless coupled with Scenario DoN 0152
- NAS Pensacola
  - NAS Whiting Field OLFs transfer to NAS Pensacola

Payback

✓ One-time cost	$111.80M
✓ MILCON	$92.46M
✓ NPV (Function)	$-30.90M
✓ Payback/Break Even Year	10+/2017+
✓ Steady State	$-5.60M
✓ Mil/Civ Reductions	25/09
✓ Mil/Civ/Student Relocate	456/80/999

FT Subgroup Recommendation:

E&T Scenario 0045

Status Quo USAF: Consolidate (Air Force) Undergraduate Pilot and CSO Flying Training Programs and Relocate the Pilot Instructor Flying Training Program

Draft Deliberative Document –For Discussion Purposes Only –Do Not Release Under FOIA

Number: E&T-0045

Title: Status Quo #2 USAF: Consolidate Undergraduate Pilot and CSO Flying Training Programs

Scenario	Drivers/Assumptions
▪ Realign Moody AFB and Randolph AFB by relocating and consolidating USAF Undergraduate Flying Training at Columbus AFB, Laughlin AFB, Sheppard AFB, and Vance AFB, and relocating PIT to Sheppard ▪ Gain: Columbus AFB (T-6, T-38) Laughlin AFB (T-6) Sheppard AFB (T-38) Vance AFB (T-6, T-1, T-37, T-43) ▪ Lose: Moody AFB (T-6, T-38) Randolph AFB (T-37, T-6, T-1, T-38, T-43)	▪ Principles: Organize and Train ▪ Assumption: Control of airspace and outlying fields associated with Moody AFB and Randolph AFB will be transferred to appropriate DoD authorities
Justification/Impact	**Potential Conflicts**
▪ Reduces excess infrastructure	▪ Requires MILCON

Approval Date: 18 Nov 04

Approved___X___ Disapproved_____ Revised_____ Deferred_____

Draft Deliberative Document –For Discussion Purposes Only –Do Not Release Under FOIA

Scenario Description

- **Action 1:** Relocate Moody AFB's Introduction to Fighter Fundamentals (Graduate-level Pilot Training function of approximately 280 students per year) to Columbus AFB and disperse Moody's Undergraduate Primary Pilot Training function between Laughlin (120 students per year) and Vance AFBs (45 students per year).

- **Action 2:** Relocate Randolph AFB's Undergraduate Navigator/Combat Systems Officer training function (Primary Navigator, Airmanship, & EWO of 765 students per year) to Vance AFB. Relocate Randolph AFB's Pilot Instructor Training (PIT) function (approximately 600 students per year) to Sheppard AFB (Wichita Falls, TX).

- **Action 3:** Relocate Columbus AFB's Undergraduate Fighter/Bomber Pilot training function (approximately 50 students per year) to Vance AFB.

- **Note:** Columbus retains its Undergraduate Fighter/Bomber Pilot Training at a reduced level of approximately 75 students per year.

Draft Deliberative Document –For Discussion Purposes Only –Do Not Release Under FOIA

Candidate E&T 0045

Candidate Recommendation: Status Quo #1 USAF: Consolidate (Air Force) Undergraduate Pilot and CSO Flying Training Programs. Realign Moody AFB, GA, and Randolph AFB, TX, by relocating and consolidating USAF Undergraduate Flying Training at Columbus AFB, MS, Laughlin AFB, TX, Sheppard AFB, TX, and Vance AF, OK, and relocating Pilot Instructor Training to Sheppard AFB, TX.

Justification

- ✓ Establishes baseline with Inter-service Training Review Organization
- ✓ Eliminates redundancy
- ✓ Postures for joint acquisition of Services' undergraduate program replacement aircraft

Military Value

- ✓ Reduction: Loss of any facility reduces Capacity and Military Value
- ✓ MVA Scores:

✓ Vance AFB	66.37
✓ Laughlin AFB	63.94
✓ Columbus AFB	62.88
✓ Randolph AFB	62.62
✓ Sheppard AFB	62.51
✓ Moody AFB	58.14
✓ Fort Rucker	75.54

Payback

✓ One-time cost	$285.83M
✓ MILCON	$203.82M
✓ NPV	$140.89M
✓ Payback/Break Even Year	70+/2077+
✓ Steady State	$-10.16M
✓ Mil/Civ Reductions	22/110
✓ Mil/Civ/Student Relocate	451/742/642

Impacts

- ✓ Criteria 6 -
  Job Loss: -130 Direct/ 135 Indirect
- ✓ Criteria 7 - No Issues
- ✓ Criteria 8 - No Issues

✓ Strategy	✓ Capacity Analysis / Data Verification	❑ JCSG/MilDep Rec'd	✓ De-conflicted w/JCSGs
✓ COBRA	✓ Military Value Analysis / Data Verification	✓ Criteria 6-8 Analysis	✓ De-conflicted w/MilDeps

Draft Deliberative Document –For Discussion Purposes Only –Do Not Release Under FOIA

Status Quo: USAF

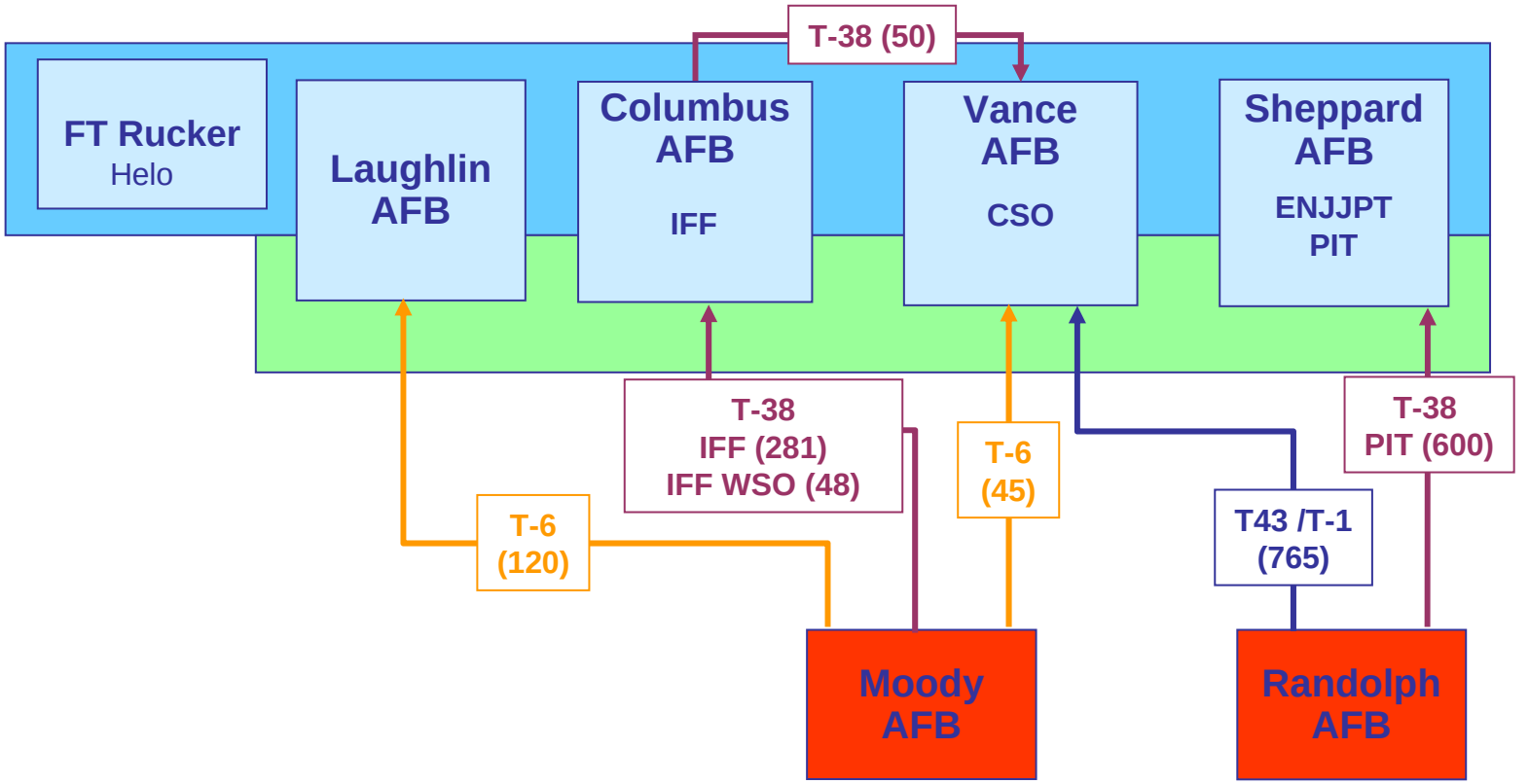

Primary
NFO/Navigator/PIT
Helicopter
Fighter/Bomber/Strike/Maritime
Tanker/Airlift/Multi-engine

Realign and consolidate USAF Undergraduate Pilot, NAV / CSO Training

Scenario E&T 0045
Status Quo USAF: Consolidate (Air Force) Undergraduate Pilot and CSO Flying Training Programs and Relocate the Pilot Instructor Flying Training Program

Criterion 5 – COBRA

27 January 2005

ROI Summary

Scenario	One-Time Costs	Steady-State Savings	ROI Years	20 Yr NPV	Billets Eliminated (Mil/Civ)	Total MILCON
E&T 0045	$285.83	$10.16	70	$140.89	22 / 110	$203.82

Draft Deliberative Document –For Discussion Purposes Only –Do Not Release Under FOIA

Disposition of Billets/Positions

Scenario		OFF	ENL	CIV	STU	TOT
E&T 0045	Eliminate	20	2	110		132
	Move	429	22	742	642	1835

Draft Deliberative Document –For Discussion Purposes Only –Do Not Release Under FOIA

One-Time Costs Summary

Scenario	Const	Pers	Ovhd	Move	Other	Total Costs	Svgs	Net Costs
E&T 0045	$203.82	$6.50	$3.93	$35.05	$36.52	$285.82	$1.83	$283.99

Draft Deliberative Document –For Discussion Purposes Only –Do Not Release Under FOIA

MILCON Summary

Scenario: E&T 0045 – USAF Status Quo	Totals
Installation	
Columbus AFB	21.75 (38.61)
Laughlin AFB	29.55 (44.84)
Sheppard AFB	60.78 (107.84)
Vance AFB	91.74 (139.94)
Total	**203.82 (331.23)**

Draft Deliberative Document –For Discussion Purposes Only –Do Not Release Under FOIA

Recurring Costs/Savings Summary

Recurring Costs/Savings FY 06-FY11						
Scenario	O&M	Mil Pers	Other	Total Costs	Svgs	Net Costs
E&T 0045	$71.60	$18.70	0	$90.30	$135.33	$-45.03

Key Elements of Savings

Scenario: E&T 0045		
Element	**Description**	**Total Net Savings FY06 - FY11**
BOS		$35.78
BAH		$22.77
Civilian Salaries		$32.91

Scenario E&T 0045
Status Quo USAF: Consolidate (Air Force) Undergraduate Pilot and CSO Flying Training Programs and Relocate the Pilot Instructor Flying Training Program

Criterion 6 – Economic Impact

27 January 2005

C6 – Employment Change

Base	Direct Loss/Gain	Indirect Loss/Gain	Total Loss/Gain	% of ROI Employment
Columbus AFB	126	86	212	0.62%
Laughlin AFB	169	127	296	1.4%
Vance AFB	802	731	1533	4.46%
Moody AFB	-538	-338	-876	-1.33%
Sheppard AFB	597	487	1084	1.17%
Randolph AFB	-1286	-1228	-2514	-0.25%
Aggregate	-130	-135	-265	

Draft Deliberative Document –For Discussion Purposes Only –Do Not Release Under FOIA

Other Points to Ponder

Payback

✓ One-time cost	$285.83M
✓ MILCON	$203.82M
✓ NPV	$140.89M
✓ Payback/Break Even Year	70+/2077+
✓ Steady State	$-10.16M
✓ Mil/Civ Reductions	22/110
✓ Mil/Civ/Student Relocate	451/742/642

FT Subgroup Recommendation:

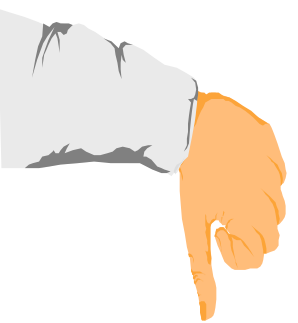

Draft Deliberative Document –For Discussion Purposes Only –Do Not Release Under FOIA

E&T Scenario 0046

Cooperative: Realign and Consolidate DoD Undergraduate Pilot and NAV/NFO/CSO Training

Draft Deliberative Document –For Discussion Purposes Only –Do Not Release Under FOIA

E&T-0046: Cooperative: Realign and Consolidate DoD Undergraduate Pilot and Nav/NFO/CSO Training

Scenario

- Realign Randolph AFB, Moody AFB, NAS Whiting Field by the following actions:
- Consolidate Undergraduate Pilot Training at Columbus AFB, NAS Corpus Christi, NAS Kingsville, Laughlin AFB, NAS Meridian, Sheppard AFB, and Vance AFB.
- Consolidate Undergraduate NFO/CSO training at NAS Pensacola by establishing a DoD Undergraduate Navigator, Combat Systems Officer, and Naval Flight Officer Center of Excellence
- Consolidate Undergraduate Rotary-wing training by establishing a Joint Rotary Wing Training Center of Excellence at Fort Rucker
- Gain: Columbus AFB (T-38), NAS Corpus Christi (T-1), NAS Kingsville (T-45), Laughlin AFB (T-6), NAS Meridian (T-6, T-34), Sheppard AFB (T-37, T-6, T-1, T-38), Vance AFB (T-6), NAS Pensacola (T-6, T-1, T-43), Fort Rucker (TH-57)
- Lose: Randolph AFB (T-37, T-6, T-1, T-38, T-43), Moody AFB (T-6, T-38), NAS Whiting (T-34, TH-57), NAS Meridian (T-45), and NAS Corpus Christi (T-34)

Potential Conflicts

- Requires MILCON

Justification/Impact

- Reduces excess infrastructure

Drivers/Assumptions

- Principles: Organize and Train
- Transformational Options: Establish Centers of Excellence for Joint of Inter-service education and training by combining or co-locating like schools
- Establish "joint" officer training (initial skill, skill progression & functional)

Approval Date: 18 Nov 04

Approved___X___ Disapproved_____ Revised_____ Deferred_____

Draft Deliberative Document –For Discussion Purposes Only –Do Not Release Under FOIA

Scenario Description

- **Action 1:** Relocate Columbus AFB's Undergraduate Primary Pilot Training function (approximately 340 students per year) to NAS Meridian.
- **Action 2:** Relocate Columbus AFB's Undergraduate Airlift/Tanker Pilot Training function (approximately 220 students per year) to NAS Corpus Christi.
- **Action 3**: Relocate Laughlin AFB's Undergraduate Airlift/Tanker Pilot Training function (approximately 225 students per year) to NAS Corpus Christi.
- **Action 4**: Relocate Laughlin AFB's Fighter/ Bomber Pilot Training Function (approximately 120 students) to Columbus AFB.
- **Action 5:** Relocate Moody AFB's Introduction to Fighter Fundamentals Pilot (approximately 280 students per year) and Weapon System Operator (approximately 48 students per year) Training functions to Columbus AFB.
- **Action 6:** Relocate Moody AFB's Undergraduate Primary Pilot Training function (approximately 60 students per year) to Laughlin AFB and (approximately 130 students per year) to Vance AFB.

Scenario Description

- **Action 7:** Relocate Randolph AFB's Undergraduate Navigator/Combat Systems Officer Training function (approximately 765 students per year) to NAS Pensacola.
- **Action 8:** Relocate Randolph AFB's Pilot Instructor Training function (approximately 600 students per year) to Sheppard AFB.
- **Action 9**: Relocate Vance AFB's Fighter/Bomber Pilot Training Function (approximately 105 students) to Columbus AFB
- **Action 10:** Relocate Vance AFB's Undergraduate Airlift/Tanker Pilot Training function (approximately 210 students per year) to NAS Corpus Christi.
- **Action 11:** Relocate NAS Corpus Christi's Primary Pilot Training function (approximately 90 students) to NAS Meridian and (approximately 100 students) to Laughlin AFB.

Scenario Description

- **Action 12:** Relocate NAS Meridian's Undergraduate Strike function (approximately 185 students per year) to NAS Kingsville.
- **Action 13:** Relocate NAS Whiting Field's Undergraduate Primary Pilot Training function (approximately 580 students per year) to Vance AFB and (approximately 310 students) to NAS Meridian.
- **Action 14:** Relocate NAS Whiting Field's Undergraduate Rotary-wing Pilot Training function (approximately 617 students per year) to Fort Rucker.

Draft Deliberative Document –For Discussion Purposes Only –Do Not Release Under FOIA

Candidate E&T 0046

Candidate Recommendation: Cooperative: Realign & consolidate DoD Undergraduate Pilot and Nav/NFO/CSO Training. Realign Randolph AFB, Moody AFB, NAS Whiting Field by 1) Consolidating UPT at Columbus AFB, NAS Corpus Christi, NAS Kingsville, Laughlin AFB, NAS Meridian, Sheppard AFB, and Vance AFB; 2) Consolidating UNT at NAS Pensacola, and 3) Consolidating URT in a Joint Rotary Wing Training Center of Excellence at Fort Rucker.

Justification

- ✓ Establishes baseline with Inter-Service Training Review Organization
- ✓ Eliminates redundancy
- ✓ Postures for joint acquisition of Services' undergraduate program replacement aircraft

Military Value

- ✓ Reduction: Loss of any facility reduces Capacity and Military Value
- ✓ MVA Scores:

✓ NAS P-Cola	69.20	✓ Randolph AFB	62.62
✓ Vance AFB	66.37	✓ Sheppard AFB	62.51
✓ Laughlin AFB	63.94	✓ NAS C-Christi	61.89
✓ NAS Meridian	63.64	✓ Moody AFB	58.14
✓ NAS Whiting	63.61	✓ Fort Rucker	75.54
✓ NAS Kingsville	63.34	✓ NAS Whiting	63.26
✓ Columbus AFB	62.88		

Payback

✓ One-time cost	$386.05M
✓ MILCON	$266.14M
✓ NPV	$-335.81M
✓ Payback/Break Even Year	6+/2015+
✓ Steady State	$-48.83M
✓ Mil/Civ Reductions	234/196
✓ Mil/Civ/Student Relocate	1,549/1,671/2,530

Impacts

- ✓ Criteria 6 -
  Job Loss: 523 Direct / 475 Indirect
- ✓ Criteria 7 - No Issues
- ✓ Criteria 8 - No Issues

✓ Strategy	✓ Capacity Analysis / Data Verification	❑ JCSG/MilDep Rec'd	✓ De-conflicted w/JCSGs
✓ COBRA	✓ Military Value Analysis / Data Verification	✓ Criteria 6-8 Analysis	✓ De-conflicted w/MilDeps

Draft Deliberative Document –For Discussion Purposes Only –Do Not Release Under FOIA

Draft Deliberative Document –For Discussion Purposes Only –Do Not Release Under FOIA

Cooperative

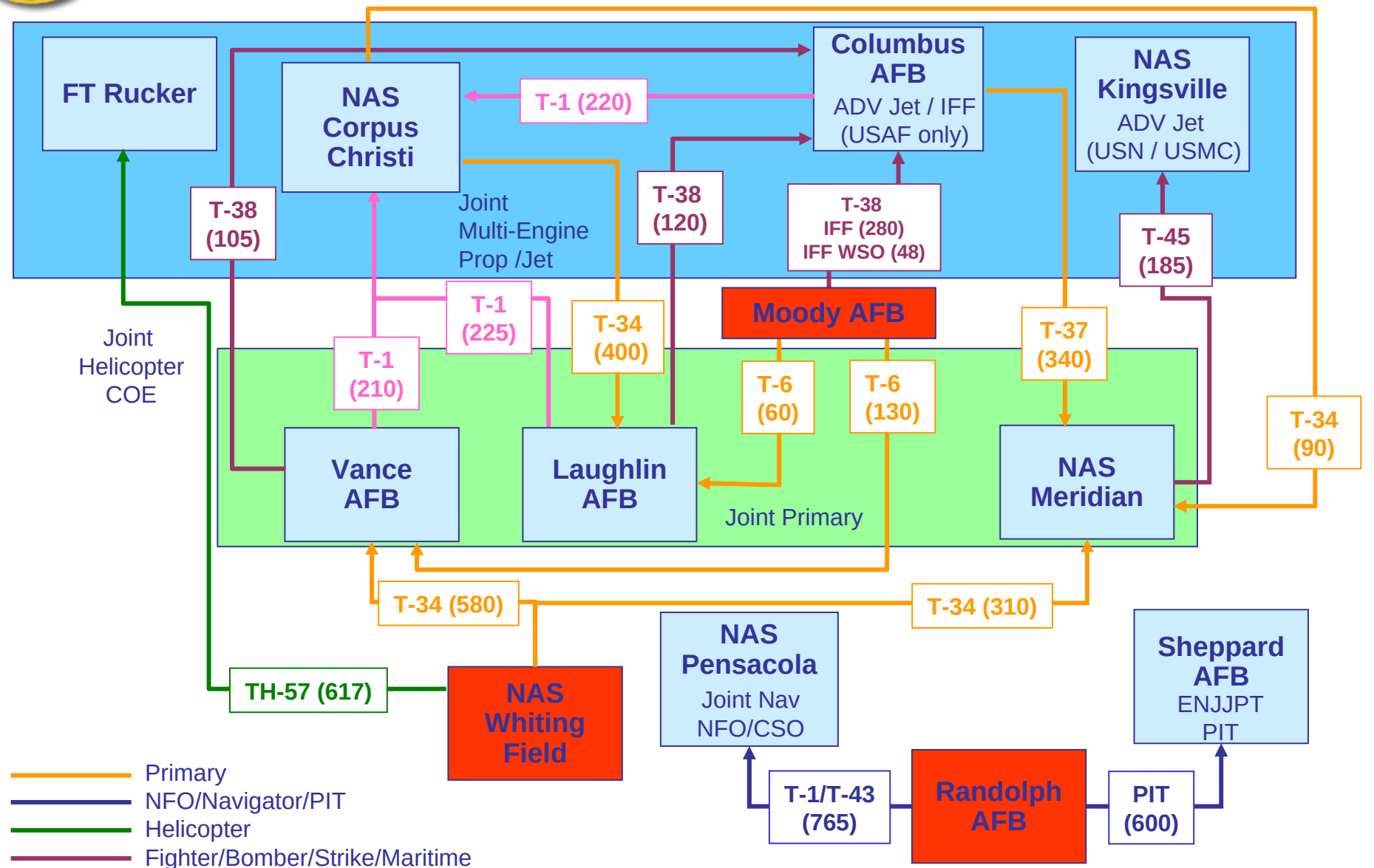

Realign and consolidate Undergraduate Pilot, NAV / NFO / CSO Training

Draft Deliberative Document –For Discussion Purposes Only –Do Not Release Under FOIA

Scenario E&T 0046
Cooperative: Realign and consolidate DoD Undergraduate Pilot and NAV/NFO/CSO Training

Criterion 5 – COBRA

27 January 2005

Draft Deliberative Document –For Discussion Purposes Only –Do Not Release Under FOIA

ROI Summary

Scenario	One-Time Costs	Steady-State Savings	ROI Years	20 Yr NPV	Billets Eliminated (Mil/Civ)	Total MILCON
E&T 0046	$386.05	$48.83	6	$-335.81	234/196	$266.14

Notes:

- Savings are realized from personnel reductions and facilities shutdown at Randolph AFB, Moody AFB, and NAS Whiting Field

- Expect significant and immediate increase in savings with closure of any of those installations

Disposition of Billets/Positions

Scenario		OFF	ENL	CIV	STU	TOT
E&T 0046	Eliminate	224	10	196		430
	Move	1,465	84	1,671	2,530	5,750

Note:

- Data from USAF would move ~120 civilians more than assigned to Vance AFB

One-Time Costs Summary

Scenario	Const	Pers	Ovhd	Move	Other	Total Costs	Svgs	Net Costs
E&T 0046	$266.14	$14.17	$22.64	$56.36	$26.74	$386.05	$82.47	$303.58

MILCON Summary

Scenario: E&T 0046 -- Cooperative	Totals
Installation	
Columbus AFB	5.44
NAS Corpus Christi	147.70 (241.61)
NAS Kingsville	29.77 (121.80)
Laughlin AFB	7.81 (57.22)
NAS Meridian	19.05
NAS Pensacola	21.03 (26.49)
Vance AFB	4.33 (44.94)
Fort Rucker	31.01
Total	266.14 (547.56)

Recurring Costs/Savings Summary

Recurring Costs/Savings FY 06-FY11						
Scenario	O&M	Mil Pers	Other	Total Costs	Svgs	Net Costs
E&T 0046	$54.54	$32.49	$10.18	$97.21	$284.93	$-187.72

Draft Deliberative Document –For Discussion Purposes Only –Do Not Release Under FOIA

Key Elements of Savings

Scenario: E&T 0046		
Element	**Description**	**Total Net Savings FY06 - FY11**
Recap		$16.09
Sustainment		$18.58
BOS		$43.27
BAH		$42.33
Civilian Salaries		$54.06
Military Salaries		$110.61

Draft Deliberative Document –For Discussion Purposes Only –Do Not Release Under FOIA

Scenario E&T 0046
Cooperative: Realign and Consolidate DoD Undergraduate Pilot and NAV/NFO/CSO Training

Criterion 6 – Economic Impact

27 January 2005

Draft Deliberative Document –For Discussion Purposes Only –Do Not Release Under FOIA

Draft Deliberative Document –For Discussion Purposes Only –Do Not Release Under FOIA

C6 – Employment Change

Base	Direct Loss/Gain	Indirect Loss/Gain	Total Loss/Gain	% of ROI Employment
Fort Rucker	596	527	1123	2.34%
Columbus AFB	19	20	39	0.11%
Laughlin AFB	-334	-255	-589	-2.79%
NAS Pensacola	607	823	1430	0.68%
NAS Corpus Christi	465	653	1118	0.51%
NAS Kingsville	545	440	985	6.71%
NAS Whiting Field	-1809	-2174	-3983	-1.89%
NAS Meridian	720	640	1360	2.49%
Moody AFB	-542	-344	-886	-1.34%
Randolph AFB	-1181	-1110	-2291	-0.23%
Sheppard AFB	574	462	1036	1.11%
Vance AFB	-183	-157	-340	-0.99%
Aggregate	-523	-475	-998	

Draft Deliberative Document –For Discussion Purposes Only –Do Not Release Under FOIA

Draft Deliberative Document –For Discussion Purposes Only –Do Not Release Under FOIA

Other Points to Ponder

- **Disconnect in Accounting for Contractor Transfers … Impact to Criteria 6**
  - ✓ **USN Contractors Transfer in Navy-to-Navy moves**
  - X **USAF did not report Contractor Loss/Gains**
  - X **No accounting if USN Contract Transfers to USAF Installation**

- **General**
  - **Synergy may permit smaller fleet of training aircraft (savings not reflected)**
  - **T-34 to T-6 transition pending (accelerate acquisition of T-6)**

- **Basing Considerations**
  - **NAS Whiting Field OLFs transfer to NAS Pensacola**

Payback

✓ One-time cost	$386.05M
✓ MILCON	$266.14M
✓ NPV	$-335.81M
✓ Payback/Break Even Year	6+/2015+
✓ Steady State	$-48.83M
✓ Mil/Civ Reductions	234/196
✓ Mil/Civ/Student Relocate	1,549/1,671/2,530

FT Subgroup Recommendation:

Draft Deliberative Document –For Discussion Purposes Only –Do Not Release Under FOIA

E&T Scenario 0052

JSF Flying Training Center ”Stand Alone” Option

F-35 to Eglin AFB

Draft Deliberative Document –For Discussion Purposes Only –Do Not Release Under FOIA

Number: E&T 0052
JSF Flying Training Center "Stand Alone" Option

Proposal	Drivers/Assumptions

▪ Realign Eglin AFB by establishing Initial Joint Fleet Replacement Squadron/ Formal Training Unit (FRS/FTU) for USN, USMC, and USAF Joint Strike Fighter (JSF) graduate-level flight training
▪ Gain: Eglin AFB
▪ Lose: Eglin AFB
	▪ Principles: Organize and Train
	▪ Joint Transformational Options:
	  ▪ Adopts jet training "best" practices
	  ▪ Enhance JSF inter-operability
	  ▪ Standardize JSF skill sets
	▪ Establish "joint" officer training (initial skill, skill progression & functional)

Justification/Impact	**Potential Conflicts**

▪ OSD Direction to nominate installation for JSF Initial Training Site
▪ Eglin #1 MilVal Score for JSF Mission
  ▪ Meets Service-endorsed requirements
  ▪ Follows services future roadmap
▪ Enhance personnel management of JSF Aviators
	▪ May preclude co-locating a consolidated maintenance training function on this campus
	▪ May require USAF to relocate assets for 33rd FW & 53 W
	▪ Requires MILCON (JSF Contract)
	  ▪ JSF Specific Facilities
	  ▪ Joint UFT Facilities

Approval Date: 7 Dec 04

Approved___X___ Disapproved_____ Revised_____ Deferred_____

Draft Deliberative Document –For Discussion Purposes Only –Do Not Release Under FOIA

Scenario Description

- **Action 1:** Realign Eglin AFB by establishing a Joint Formal Training Unit / Fleet Replacement Squadron (FTU/FRS) capable of producing approximately 250 F-35 pilots/year.

- **Action 2:** If required, relocate units as necessary to provide sufficient space for the new FTU.

Draft Deliberative Document –For Discussion Purposes Only –Do Not Release Under FOIA

Candidate E&T 0052

Candidate Recommendation: JSF Stand-Alone. Realign Eglin AFB, FL, by establishing a joint Fleet Replacement Squadron / Formal Training Unit (FRS/FTU) for USAF, USN, and USMC Joint Strike Fighter (JSF) graduate-level training.

Justification

- ✓ OSD Direction to nominate installation for JSF Initial Training Site
- ✓ Eglin #1 MilVal Score for JSF Mission
  - ✓ Meets Service-endorsed requirements
  - ✓ Follows services future roadmap
- ✓ Enhance personnel management of JSF Aviators

Military Value

- ✓ Reduction: Loss of any facility reduces Capacity and Military Value
- ✓ MVA Scores:

✓ Eglin AFB	74.49	✓ NAS Meridian	67.59
✓ C-Point MCAS	73.58	✓ Randolph AFB	66.43
✓ Laughlin AFB	72.27	✓ Shaw AFB	66.15
✓ Tyndall AFB	70.61	✓ Yuma MCAS	61.84
✓ NAS Pensacola	70.06	✓ Beaufort MCAS	61.59
✓ Vance AFB	70.00	✓ Moody AFB	60.90
✓ Columbus AFB	69.36	✓ Sheppard AFB	59.69
✓ NAS Kingsville	68.76		

Payback

✓ One-time cost	$80.36M
✓ MILCON	$65.88M
✓ NPV (Function/Closure)	$104.57M
✓ Payback/Break Even Year	Never
✓ Steady State	$1.94M
✓ Mil/Civ Reductions	0/0
✓ Mil/Civ/Student Relocate	396/0/250

Impacts

- ✓ Criteria 6
  - Job Loss: 999 Indirect
- ✓ Criteria 7 - No Issues
- ✓ Criteria 8 - No Issues

✓Strategy	✓Capacity Analysis / Data Verification	❑ JCSG/MilDep Rec'd	✓De-conflicted w/JCSGs
✓COBRA	✓Military Value Analysis / Data Verification	✓ Criteria 6-8 Analysis	✓ De-conflicted w/MilDeps

Draft Deliberative Document –For Discussion Purposes Only –Do Not Release Under FOIA

Scenario E&T 0052
JSF Flying Training Center ”Stand Alone” Option
F-35 to Eglin AFB

Criterion 5 – COBRA

27 January 2005

Draft Deliberative Document –For Discussion Purposes Only –Do Not Release Under FOIA

ROI Summary

Scenario	One-Time Costs	Steady-State Savings	ROI Years	20 Year NPV
E&T 0052	$80.36	$1.93	Never	$104.57

Disposition of Billets/Positions

Scenario		OFF	ENL	CIV	STU	TOT
E&T 0052	Eliminate	0	0	0		0
	Move	312	84	0	250	646

One-Time Costs Summary

Scenario	Const	Pers	Ovhd	Move	Other	Total Costs	Svgs	Net Costs
E&T 0052	$65.88	$0.00	$0.62	$3.70	$10.16	$80.36	$1.44	$78.92

Draft Deliberative Document –For Discussion Purposes Only –Do Not Release Under FOIA

MILCON Summary

Scenario: E&T 0052	Eglin AFB			
Construction FAC Description	UM	New	Rehab	Cost ($M)
Aircraft Apron Surfaced	SY	79016		8.99
Aviation Operations Bldg	SF	14000		2.60
Gen Purpose Instruction Bldg	SF	26130		4.79
Flight Simulator Facility	SF	55525		12.11
Aircraft MX Hangar	SF	90600		23.95
Gen Admin Bldg	SF	26075		4.42
Aircraft Main Shop	SF		27200	2.87
Aircraft Corrosion Control hangar	SF		17280	2.74
Aircraft Main Shop, Depot	SF		2400	0.23
Missile Maintenance / Assembly Bldg	SF		9525	1.37
Weapons Maintenance Shop	SF		10047	0.85
Electronic Communications Maintenance Bldg	SF		6000	0.52
Parachute and Dingy Maintenance Shop	SF		4400	0.43
Religious Education Facility	SF	8500		1.70
Nursery & Childcare Facility	SF	10166		2.00
Recreation Center	SF	6504		1.22
Indoor Physical Fitness Facility	SF	10340		2.03
Aviation Operations Bldg	SF		28000	2.55
Installation Support Vehicle Maintenance	SF		43937	3.98
Total				65.87 (79.35)

Draft Deliberative Document –For Discussion Purposes Only –Do Not Release Under FOIA

Recurring Costs/Savings Summary

Recurring Costs/Savings FY 06-FY11 ($M)						
Scenario	O&M	Mil Pers	Other	Total Costs	Svgs	Net Costs
E&T 0052	3.96	3.11	0	7.07	5.13	1.94

Key Elements of Savings

Scenario: E&T 0052		
Element	**Description**	**Total Net Savings ($M) FY06 - FY11**
BOS		1.50
BAH		3.63

Scenario E&T 0052
JSF Flying Training Center ”Stand Alone” Option
F-35 to Eglin AFB

Criterion 6 – Economic Impact

27 January 2005

Draft Deliberative Document –For Discussion Purposes Only –Do Not Release Under FOIA

C6 – Employment Change

Base	Direct Loss/Gain	Indirect Loss/Gain	Total Loss/Gain	% of ROI Employment
Eglin AFB	3,403	2,515	5,918	4.93%
NAS Oceana	-2,276	-2,467	-4,743	-0.48%
Luke AFB	-1,127	-1,047	-2,174	-0.11
Aggregate	0	-999	-999	

Other Points to Ponder

Payback

✓ One-time cost	$80.36M
✓ MILCON	$65.88M
✓ NPV (Function/Closure)	$104.57M
✓ Payback/Break Even Year	Never
✓ Steady State	$1.94M
✓ Mil/Civ Reductions	0/0
✓ Mil/Civ/Student Relocate	396/0/250

FT Subgroup Recommendation:

E&T Scenario 0049

DoD / USG UAV Center of Excellence Option #1

UAV CoE at Fort Rucker

Draft Deliberative Document –For Discussion Purposes Only –Do Not Release Under FOIA

Number: E&T-0049
Title: DoD/USG UAV Center of Excellence Option 1

Proposal	Drivers/Assumptions
▪ Realign Ft Rucker, AL by relocating and consolidating DoD Undergraduate Unmanned Aerial Vehicle Training from Indian Springs AF Aux, NV, Fort Huachuca, AZ and NAS Pensacola (NOLF Choctaw), FL. ▪ Gain: Ft Rucker, AL ▪ Lose: Indian Springs AF Aux, NV Beale AFB, CA Ft Huachuca, AZ NAS Pensacola (NOLF Choctaw), FL	▪ Principles: Organize and Train ▪ Transformational Options: ▪ Establish Centers of Excellence for Joint or Inter-service education ▪ Train by combining / co-locating like schools ▪ Establish "joint" training (initial skill, skill progression & functional)
Justification/Impact	**Potential Conflicts**
▪ Reduces excess infrastructure. ▪ Postures for joint acquisition of UAV platforms.	▪ Requires MILCON. ▪ Technology advancements setting pace for service requirements.

Approval Date: 18 Nov 04

Approved___X___ Disapproved_____ Revised_____ Deferred_____

Draft Deliberative Document –For Discussion Purposes Only –Do Not Release Under FOIA

Scenario Description

- **Action 1:** Relocate sufficient personnel and equipment from Indian Springs AF Aux and associate units to conduct formal undergraduate UAV operator/pilot at Fort Rucker.

- **Action 2:** Relocate sufficient personnel and equipment from Beale AFB and associate units to conduct formal undergraduate UAV operator/pilot training at Fort Rucker.

- **Action 3:** Relocate sufficient personnel and equipment from NAS Pensacola and associate units to conduct formal undergraduate UAV operator/pilot/mission commander training at Fort Rucker.

- **Action 4:** Relocate by relocating sufficient personnel and equipment from Fort Huachuca and associate units to conduct formal undergraduate UAV operator/pilot training at Fort Rucker.

- **Action 5:** Establish a Joint DOD/USG Unmanned Aerial Vehicle Center of Excellence at Fort Rucker.

Draft Deliberative Document –For Discussion Purposes Only –Do Not Release Under FOIA

Candidate E&T 0049

Candidate Recommendation: DoD / USG UAV Center of Excellence Option #1. Realign Fort Rucker, AL, by relocating and consolidating DoD Undergraduate Unmanned Aerial Vehicle (UAV) Training from Indian Springs AF Aux, NV, Fort Huachuca, AZ, and NOLF Choctaw, Florida.

Justification

- ✓ Establishes baseline with Inter-service Training Review Organization
- ✓ Eliminates redundancy
- ✓ Postures for joint acquisition of Services' undergraduate program replacement aircraft

Military Value

- ✓ Reduction: Loss of any facility reduces Capacity and Military Value
- ✓ MVA Scores:
  - ✓ Fort Rucker 81.57
  - ✓ Indian Springs AFS 58.95
  - ✓ Fort Huachuca 58.40
  - ✓ NOLF Choctaw 34.06
  - ✓ Beale AFB

Payback

✓ One-time cost	$32.46M
✓ MILCON	$23.55M
✓ NPV	$33.10M
✓ Payback/Break Even Year	Never
✓ Steady State	$.17M
✓ Mil/Civ Reductions	0/0
✓ Mil/Civ/Student Relocate	207/65/94

Impacts

- ✓ Criteria 6 - Job Gain: 62 Indirect
- ✓ Criteria 7 - No Issues
- ✓ Criteria 8 - No Issues

✓Strategy	✓Capacity Analysis / Data Verification	❑ JCSG/MilDep Rec'd	✓De-conflicted w/JCSGs
✓COBRA	✓Military Value Analysis / Data Verification	✓ Criteria 6-8 Analysis	✓ De-conflicted w/MilDeps

Draft Deliberative Document –For Discussion Purposes Only –Do Not Release Under FOIA

E&T Scenario 0050

DoD / USG UAV Center of Excellence Option #2

UAV CoE to Indian Springs AF Aux

Draft Deliberative Document –For Discussion Purposes Only –Do Not Release Under FOIA

Draft Deliberative Document –For Discussion Purposes Only –Do Not Release Under FOIA

Number: E&T-0050
Title: DoD/USG UAV Center of Excellence Option 2

Proposal	Drivers/Assumptions
▪ Realign Indian Springs AF Aux, NV by relocating and consolidating DoD Undergraduate Unmanned Aerial Vehicle Training from Ft. Huachuca, AZ and NOLF Choctaw, FL. ▪ Gain: Indian Springs AF Aux, NV ▪ Lose: Ft Huachuca, AZ NOLF Choctaw, NSA Pensacola, FL	▪ Principles: Organize and Train ▪ Transformational Options: ▪ Establish Centers of Excellence for Joint or Inter-service education ▪ Train by combining / co-locating like schools ▪ Establish "joint" training (initial skill, skill progression & functional)
Justification/Impact	**Potential Conflicts**
▪ Reduces excess infrastructure. ▪ Postures for joint acquisition of UAV platforms.	▪ Requires MILCON. ▪ Technology advancements setting pace for service requirements.

Approval Date: 18 Nov 04

Approved___X___ Disapproved_____ Revised_____ Deferred_____

Draft Deliberative Document –For Discussion Purposes Only –Do Not Release Under FOIA

Scenario Description

- **Action 1:** Establish a Joint DOD/USG Unmanned Aerial Vehicle Center of Excellence at Indian Springs AF Aux.

- **Action 2:** Relocate sufficient personnel and equipment from NAS Pensacola and associate units to conduct formal undergraduate UAV operator/pilot/mission commander training at Indian Springs AF Aux.

- **Action 3:** Relocate sufficient personnel and equipment from Fort Huachuca and associate units to conduct formal undergraduate UAV operator/pilot training at Indian Springs AF Aux.

- **Action 4:** Establish a Joint DOD/USG Unmanned Aerial Vehicle Center of Excellence at Indian Springs AF Aux.

Draft Deliberative Document –For Discussion Purposes Only –Do Not Release Under FOIA

Candidate E&T 0050

Candidate Recommendation: DoD / USG UAV Center of Excellence Option #2. Realign Indian Springs AF Aux, NV, by relocating and consolidating DoD Undergraduate Unmanned Aerial Vehicle (UAV) Training from Fort Huachuca, AZ, and NOLF Choctaw, (NAS Pensacola), FL.

Justification

- ✓ Establishes baseline with Inter-service Training Review Organization
- ✓ Eliminates redundancy
- ✓ Postures for joint acquisition of Services' undergraduate prgm replacement aircraft

Military Value

- ✓ Reduction: Loss of any facility reduces Capacity and Military Value
- ✓ MVA Scores:
  - ✓ Indian Springs AFS 58.95
  - ✓ Fort Huachuca 58.40
  - ✓ NOLF Choctaw 34.06

Payback

✓ One-time cost	$84.32M
✓ MILCON	$66.48M
✓ NPV	$104.19M
✓ Payback/Break Even Year	Never
✓ Steady State	$1.76M
✓ Mil/Civ Reductions	00/00
✓ Mil/Civ/Student Relocate	120/61/82

Impacts

- ✓ Criteria 6 – Job Loss
- ✓ Criteria 7 - No Issues
- ✓ Criteria 8 - No Issues

✓Strategy	✓Capacity Analysis / Data Verification	❑ JCSG/MilDep Rec'd	✓De-conflicted w/JCSGs
✓COBRA	✓Military Value Analysis / Data Verification	✓ Criteria 6-8 Analysis	✓ De-conflicted w/MilDeps

Draft Deliberative Document –For Discussion Purposes Only –Do Not Release Under FOIA

Scenario E&T 0049
DoD / USG UAV Center of Excellence Option #1
UAV CoE at Fort Rucker

Scenario E&T 0050
DoD / USG UAV Center of Excellence Option #2
UAV CoE to Indian Springs AF Aux

Criterion 5 – COBRA

27 January 2005

ROI Summary

Scenario	One-Time Costs	Steady-State Savings	ROI Years	20 Yr NPV	Billets Eliminated (Mil/Civ)	Total MILCON
E&T 0049	$32.46	$.17	Never	$33.10	0/0	$23.55
E&T 0050	$84.32	$-1.76	Never	$84.32	0/0	$66.48

Disposition of Billets/Positions

Scenario		OFF	ENL	CIV	STU	TOT
E&T 0049	Eliminate	0	0	0		0
	Move	44	163	65	94	366
E&T 0050	Eliminate	0	0	0		0
	Move	5	115	61	82	263

One-Time Costs Summary

Scenario	Const	Pers	Ovhd	Move	Other	Total Costs	Svgs	Net Costs
E&T 0049	$23.58	$0.31	$0.73	$3.61	$4.27	$32.46	$0.44	$32.02
E&T 0050	$66.48	$0.31	$0.32	$4.36	$12.85	$84.32	$0.21	$84.11

Draft Deliberative Document –For Discussion Purposes Only –Do Not Release Under FOIA

MILCON Summary

Scenario: E&T 0049	Fort Rucker			
Construction FAC Description	UM	New	Rehab	Cost
General Purpose Instruction Bldg	SF	24395		3.55
Applied Instruction Bldg	SF	121542		20.00
Total				23.55

Scenario: E&T 0050	Indian Springs AFS			
Construction FAC Description	UM	New	Rehab	Cost
Taxiway	SY	3400		0.62
Aircraft Apron	SY	24000		4.37
General Purpose Instruction Bldg	SF	34395		10.09
Applied Instruction Bldg	SF	121542		44.21
Aircraft MX Hangar	SF	14000		5.92
Bulk Liquid Fuel Storage	BL	238		0.02
Dining Facility	SF	1000		0.46
Indoor Physical Fit Facility	SF	2517		0.79
Total				66.48

Draft Deliberative Document –For Discussion Purposes Only –Do Not Release Under FOIA

Recurring Costs/Savings Summary

Recurring Costs/Savings FY06-FY11						
Scenario	O&M	Mil Pers	Other	Total Costs	Svgs	Net Costs
E&T 0049	$6.09	$3.94	$0.00	$10.03	$9.31	$0.72
E&T 0050	$6.07	$8.05	$0.00	$14.12	$7.12	$7.00

Scenario E&T 0049
DoD / USG UAV Center of Excellence Option #1
UAV CoE at Fort Rucker

Scenario E&T 0050
DoD / USG UAV Center of Excellence Option #2
UAV CoE to Indian Springs AF Aux

Criterion 6 – Economic Impact

27 January 2005

C6 – Employment Change

E&T 0049 – Fort Rucker				
Base	Direct Loss/Gain	Indirect Loss/Gain	Total Loss/Gain	% of ROI Employment
NAS Pensacola	-64	-81	-145	-0.07%
Beale AFB	-61	-44	-105	-0.15%
Indian Springs AFS	-32	-21	-53	-0.01%
Fort Huachuca	-209	-125	-334	-0.65%
Fort Rucker	366	333	699	1.45%
Aggregate	0	62	62	

E&T 0050 – Indian Springs				
Base	Direct Loss/Gain	Indirect Loss/Gain	Total Loss/Gain	% of ROI Employment
NAS Pensacola	-54	-69	-123	-0.06%
Indian Springs AFS	263	181	444	+0.05%
Fort Huachuca	-209	-123	-332	-0.64%
Aggregate	0	-11	-11	

Draft Deliberative Document –For Discussion Purposes Only –Do Not Release Under FOIA

Other Points to Ponder

Payback E&T 0049 – Fort Rucker

✓ One-time cost	$32.46M
✓ MILCON	$23.55M
✓ NPV	$33.10M
✓ Payback/Break Even Year	Never
✓ Steady State	$.17M
✓ Mil/Civ Reductions	0/0
✓ Mil/Civ/Student Relocate	207/65/94

FT Subgroup Recommendation:

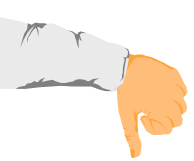

Payback E&T 0050 – Indian Springs

✓ One-time cost	$84.32M
✓ MILCON	$66.48M
✓ NPV	$104.19M
✓ Payback/Break Even Year	Never
✓ Steady State	$1.76M
✓ Mil/Civ Reductions	00/00
✓ Mil/Civ/Student Relocate	120/61/82

FT Subgroup Recommendation:

Draft Deliberative Document –For Discussion Purposes Only –Do Not Release Under FOIA

Draft Deliberative Document –For Discussion Purposes Only –Do Not Release Under FOIA

E&T JCSG Principals Meeting
January 27, 2005

Specialized Skill Training Subgroup

Draft Deliberative Document –For Discussion Purposes Only –Do Not Release Under FOIA

Draft Deliberative Document –For Discussion Purposes Only –Do Not Release Under FOIA

SST Subgroup Scenario Timeline

Tracking Number	Scenario	SDC at MilDep	SDC at Activity	MilDep to JCSG	Initial COBRA Review	JCSG COBRA OK	Criteria 6&7	Criteria 8	Legal Rev	JCSG Final Approval
0004	JCE Supply	22 Nov	30 Nov	22 Dec	21 Dec	06 Jan	13 Jan	20 Jan	26 Jan	27 Jan Deactivated
0005	Consolidate Trans Mgmt	22 Nov	30 Nov	17 Dec	3 Jan	06 Jan	13 Jan	20 Jan	26 Jan	27 Jan Hold Status
0014	JCE Religious	22 Nov	30 Nov	17 Dec	3 Jan	06 Jan	13 Jan	20 Jan	26 Jan	27 Jan
0015	JCE Legal	22 Nov	30 Nov	17 Dec	3 Jan	06 Jan	13 Jan	20 Jan	26 Jan	27 Jan Deactivated
0016	JCE Culinary	22 Nov	30 Nov	17 Dec	21 Dec	06 Jan	13 Jan	20 Jan	26 Jan	27 Jan
0017	JCE Admin, Per, Finance	22 Nov	30 Nov	17 Dec	21 Dec	06 Jan	13 Jan	20 Jan	26 Jan	27 Jan Deactivated
0018	JCE Intel	22 Nov	30 Nov	17 Dec	21 Dec	06 Jan	13 Jan	20 Jan	26 Jan	27 Jan Deactivated
0029	Army Prime Power	22 Nov	30 Nov	13 Dec	14 Dec	16 Dec	6 Jan	13 Jan	20 Jan	27 Jan
0030	Privatize DLI	22 Nov	30 Nov	03 Dec	29 Dec	06 Jan	13 Jan	20 Jan	26 Jan	27 Jan Deactivated

Draft Deliberative Document –For Discussion Purposes Only –Do Not Release Under FOIA

Draft Deliberative Document –For Discussion Purposes Only –Do Not Release Under FOIA

SST Subgroup Scenario Timeline

Tracking Number	Scenario	SDC at MilDep	SDC at Activity	MilDep to JCSG	Initial COBRA Review	JCSG COBRA OK	Criteria 6&7	Criteria 8	Legal Rev	JCSG Final Approval
0031	DLI to Ft Meade	22 Nov	30 Nov	3 Dec	29 Dec	6 Jan	13 Jan	20 Jan	26 Jan	27 Jan Deactivated
0039	JCE Diver Trng	24 Nov	30 Nov	9 Dec	14 Dec	16 Dec	6 Jan	6 Jan	10 Jan	13 Jan
0040	JCE Intel	24 Nov	30 Nov	27 Dec	21 Dec	06 Jan	13 Jan	20 Jan	26 Jan	27 Jan Deactivated
0041	Navy/Marine Intel/Crypto	24 Nov	30 Nov	9 Dec	21 Dec	06 Jan	13 Jan	20 Jan	26 Jan	27 Jan
0042	Army/AF Intel/Crypto	24 Nov	30 Nov	17 Dec	23 Dec	06 Jan	13 Jan	20 Jan	26 Jan	27 Jan Deactivated
0043	DLI to Goodfellow	24 Nov	30 Nov	17 Dec	29 Dec	06 Jan	13 Jan	20 Jan	26 Jan	27 Jan Deactivated
0053	Consolidate Trans Mgmt	10 Dec	14 Dec	3 Jan	03 Jan	06 Jan	13 Jan	20 Jan	26 Jan	27 Jan
0055	Joint Strike Fighter (ITC) Eglin	17 Dec	23 Dec	7 Jan	13 Jan	20 Jan	27 Jan	27 Jan	3 Feb	4 Feb
0056	Joint Strike Fighter (MTC) Sheppard	17 Dec	23 Dec	7 Jan	13 Jan	20 Jan	27 Jan	27 Jan	3 Feb	4 Feb

Draft Deliberative Document –For Discussion Purposes Only –Do Not Release Under FOIA

SST Subgroup Scenario Timeline

Tracking Number	Scenario	SDC at MilDep	SDC at Activity	MilDep to JCSG	Initial COBRA Review	JCSG COBRA OK	Criteria 6&7	Criteria 8	Legal Rev	JCSG Final Approval
0057	Joint Strike Fighter (MTC) Pensacola	17 Dec	23 Dec	7 Jan	13 Jan	20 Jan	27 Jan	27 Jan	3 Feb	4 Feb
0059	Joint Strike Fighter (ITC) Kingsville	17 Dec	23 Dec	7 Jan	13 Jan	20 Jan	27 Jan	27 Jan	3 Feb Deleted	4 Feb
0060	Joint Strike Fighter (ITC) Columbus	17 Dec	23 Dec	7 Jan	13 Jan	20 Jan	27 Jan	27 Jan	3 Feb Deleted	4 Feb

Agenda

- Overwatch Candidate Recommendations (Navy)

- E&T 0041 Consolidated Navy/Marine Crypto/Intelligence Training at (Dam Neck, VA) (E&T JCSG Discussion)

- E&T 0055 Joint Strike Fighter Integrated Training Center (ITC) (Eglin AFB, FL)
- E&T 0056 Joint Strike Fighter Maintenance Training Center (MTC) (Sheppard AFB, TX)
- E&T 0057 Joint Strike Fighter Maintenance Training Center (MTC) (Pensacola, FL)

Overwatch Candidate Recommendations (Navy)

- DON-0003 Close Naval Station Ingleside, TX (San Diego, CA or Little Creek, VA) Deactivate
- DON-0031 Close Naval Station Ingleside, TX (San Diego, CA or Mayport, FL) Deactivate
- **DON-0032 Close Naval Station Ingleside, TX (Naval Station San Diego, CA) Navy Recommended**

- **DON-0033 Close Submarine Base New London, CT (Naval Station Norfolk, VA and Kings Bay, GA) Navy Recommended**
- DON-0034 Close Submarine Base New London, CT (Naval Station Norfolk, VA) Deactivate

Candidate #DON-0032

Candidate Recommendation: Close Naval Station Ingleside, TX; Relocate ships to Naval Station San Diego, CA; Consolidate MINEWARTRACEN with FLEASWTRACEN, San Diego, CA. Realign NAS Corpus Christi, TX; Relocate COMINEWARCOM to ASW Center, Naval Base Point Loma, CA

Justification

- ✓Reduces Excess Capacity.
- ✓Saves $$ by closing entire installation
- ✓Single sites at West Coast Port; preferred operationally
- ✓Ensures capacity available at Little Creek for future platforms
- ✓Synergy between MINEWARCOM/ASW Center and surface mine ships

Military Value

- ✓Increases average military value from 52.87 to 53.97
- ✓Ranked 15 of 16 Active Bases in the Surface-Subsurface Operations function.

Payback

✓One Time Cost:	$232M
✓Net Implementation Costs:	$11M
✓Annual Recurring Savings:	$60M
✓Payback:	4 Years
✓NPV Savings:	$541M

Impacts

- ✓Criterion 6: -6066 jobs; 2.74% job loss
- ✓Criterion 7: No substantial impact
- ✓Criterion 8: No substantial impact

Recommend E&T JCSG Approve DON Candidate

- ✓Strategy
- ✓COBRA
- ✓Capacity Analysis/Data Verification
- ✓Military Value Analysis/Data Verification
- ✓JCSG/MilDep Recommended
- ✓Criteria 6-8 Analysis
- ✓De-conflicted w/JCSGs
- ✓De-conflicted w/MilDeps

Candidate #DON-0033

Candidate Recommendation: Close SUBASE New London, CT. Relocate assigned submarines to Naval Station Norfolk, VA and SUBASE Kings Bay, GA. Appropriate personnel, equipment, and support will be relocated with the ships. Relocate the Naval Submarine School and Center for Submarine Learning to SUBASE Kings Bay, GA.

Justification

- ✓Reduces Excess Capacity
- ✓Saves $$ by closing entire installation
- ✓Maintains strategic and operational flexibility (2 SSN sites on East Coast)

Military Value

- ✓Increases average military value from 52.87 to 53.25
- ✓Ranked 12 of 16 Active Bases in the Surface-Subsurface Operations function

Payback

✓One Time Cost:	$653M
✓Net Implementation Cost:	$281M
✓Annual Recurring Savings:	$203M
✓Payback Period:	2 yrs
✓NPV savings:	$1.66B

Impacts

- ✓Criterion 6: -15,948 jobs; 9.46% job loss
- ✓Criterion 7: No substantial impact
- ✓Criterion 8: No substantial impact

Recommend E&T JCSG Approve DON Candidate

- ✓Strategy
- ✓COBRA
- ✓Military Capacity Analysis/Data Verification
- ✓Value Analysis/Data Verification
- ✓JCSG/MilDep Recommended
- ✓Criteria 6-8 Analysis
- ✓De-conflicted w/JCSGs
- ✓De-conflicted w/MilDeps

E&T 0041 Consolidate Navy and Marine Corps Intelligence Training (Dam Neck, VA)

Scenario	Drivers/Assumptions
▪ Realign Dam Neck, VA by consolidating Navy and Marine Corps Intelligence Training. Realign NAS Pensacola, FL (Corry Station) by relocating Cryptology School and Center to NAS Oceana, VA (NAVSTA Dam Neck Annex). Provide by disestablishing all Cryptology training at NAS Pensacola, FL (Corry Station). The intent of this scenario is to consolidate like courses while maintaining service unique capabilities.	▪ Principles: Organize and Train ▪ Transformational Options: Establish Centers of Excellence for Joint or Inter-service education and training by combining or co-locating like schools ▪ Establish "joint" officer and enlisted specialized skill training (initial skill, skill progression & functional)
Justification/Impact	**Potential Conflicts**
▪ Uses Inter-service Training Review Organization as the baseline ▪ Train as you fight "jointly" ▪ Eliminates redundancy, leased space/costs	

Approved__x____ Disapproved_____ Revised_____ Deferred_____

Draft Deliberative Document –For Discussion Purposes Only –Do Not Release Under FOIA

Candidate # E&T 0041

Candidate Recommendation: Realign NAS Oceana, VA (NAVSTA Dam Neck Annex) by consolidating Navy and Marine Corps Intelligence Training. Realign NAS Pensacola, FL (Corry Station) by relocating Cryptology School and Center to NAS Oceana, VA (Dam Neck Annex). Provide by disestablishing all Cryptology training at NAS Pensacola, FL (Corry Station).

Justification

- ✓ Uses Inter-service Training Review Organization as the baseline
- ✓ Eliminates redundancy and cost
- ✓ Train as we fight "jointly"

Military Value

	Dam Neck:	NAS Pensacola
✓ Initial Skills	35.20	59.05
✓ Skills Progression	35.90	45.52
✓ Functional	37.76	39.25

Payback

✓ 1- Time Cost:	$187.222M
✓ Net Implementation Costs	$ 60.670M
✓ Annual Recurring Costs	$ 14.302M
✓ Payback Period	Never
✓ NPV (cost)	$191.480M

Impacts

- ✓ Criterion 6: No issues
- ✓ Criterion 7: No issues
- ✓ Criterion 8: No issues

✓ Strategy
✓ COBRA
✓ Capacity Analysis / Data Verification
✓ Military Value Analysis / Data Verification
JCSG/MilDep Recommended
✓ Criteria 6-8 Analysis
✓ De-conflicted w/JCSGs
✓ De-conflicted w/MilDeps

Draft Deliberative Document –For Discussion Purposes Only –Do Not Release Under FOIA

Establish Joint Strike Fighter Integrated Training Center (ITC) (Eglin AFB, FL)

Scenario	Drivers/Assumptions
▪ Realign Eglin AFB, FL by establishing a Joint Strike Fighter Integrated Training Center ▪ Intent is to consolidate maintenance and flight training for the Joint Strike Fighter	▪ Principles: Organize and Train ▪ Transformational Options: Establish Centers of Excellence for Joint or Inter-service education and training by combining or co-locating like schools ▪ Establish "joint" officer and enlisted specialized skill training (initial skill, skill progression & functional)
Justification/Impact	**Potential Conflicts**
▪ Train as we fight "jointly" ▪ Uses Inter-service Training Review Organization as the baseline ▪ Supports JSF Program Office concept for integrated flying and maintenance training ▪ Eliminates redundancy	▪ Requires shift in service paradigm ▪ Capacity analysis indicates lack of berthing, messing, and classrooms

Approved_x___Disapproved_____Revised_____Deferred_____

Draft Deliberative Document –For Discussion Purposes Only –Do Not Release Under FOIA

Candidate # E&T 0055

Candidate Recommendation: Realign Eglin AFB, FL by establishing a Joint Strike Fighter Integrated Training Center.

Justification

- ✓ Train as we fight "jointly"
- ✓ Uses Inter-service Training Review Organization as the baseline
- ✓ Supports JSF Program Office concept for integrated flying and maintenance training
- ✓ Eliminates redundancy

Military Value

- ✓ Eglin AFB:
  - ✓ Initial Skills 30.43
  - ✓ Skills Progression 39.04
  - ✓ Functional 35.60

Payback

✓ 1- Time Cost:	$187.222M
✓ Net Implementation Costs	$ 60.670M
✓ Annual Recurring Costs	$ 14.302M
✓ Payback Period	Never
✓ NPV (cost)	$191.480M

Impacts

- ✓ Criterion 6: No issues
- ✓ Criterion 7: No issues
- ✓ Criterion 8: No issues

✓ Strategy
✓ COBRA
✓ Capacity Analysis / Data Verification
✓ Military Value Analysis / Data Verification
JCSG/MilDep Recommended
✓ Criteria 6-8 Analysis
✓ De-conflicted w/JCSGs
✓ De-conflicted w/MilDeps

Draft Deliberative Document –For Discussion Purposes Only –Do Not Release Under FOIA

Establish Joint Strike Fighter Maintenance Training Center (MTC) (Sheppard AFB, TX)

Scenario	Drivers/Assumptions
▪ Realign Sheppard AFB, TX by establishing a Joint Strike Fighter Maintenance Training Center ▪ Intent is to consolidate Air Force, Navy, and Marine Corps maintenance training for the Joint Strike Fighter at one location	▪ Principles: Organize and Train ▪ Transformational Options: Establish Centers of Excellence for Joint or Inter-service education and training by combining or co-locating like schools ▪ Establish "joint" officer and enlisted specialized skill training (initial skill, skill progression & functional)
Justification/Impact	**Potential Conflicts**
▪ Train as we fight "jointly" ▪ Uses Inter-service Training Review Organization as the baseline ▪ Leverages existing maintenance training infrastructure and resources ▪ Eliminates redundancy	▪ Requires shift in service paradigm ▪ JPO Integrated Training Center Concept requires an additional $15M nonrecurring cost for change to Maintenance Training Center

Approved__x___Disapproved_____Revised_____Deferred_____

Draft Deliberative Document –For Discussion Purposes Only –Do Not Release Under FOIA

Candidate # E&T 0056

Candidate Recommendation: Realign Sheppard AFB, TX by establishing a Joint Strike Fighter Maintenance Training Center.

Justification

- ✓ Realign Sheppard AFB, TX by establishing a Joint Strike Fighter Maintenance Training Center
- ✓ Intent is to consolidate Air Force, Navy, and Marine Corps maintenance training for the Joint Strike Fighter at one location

Military Value

- ✓ Sheppard AFB:
  - ✓ Initial Skills 61.80
  - ✓ Skills Progression 44.17
  - ✓ Functional 49.00

Payback

✓ 1- Time Cost:	$ 92.000M
✓ Net Implementation Savings	$ 31.118M
✓ Annual Recurring Costs	$ 15.518M
✓ Payback Period	Never
✓ NPV (cost)	$117.785M

Impacts

- ✓ Criterion 6: No issues
- ✓ Criterion 7: No issues
- ✓ Criterion 8: No issues

✓ Strategy
✓ COBRA
✓ Capacity Analysis / Data Verification
✓ Military Value Analysis / Data Verification
JCSG/MilDep Recommended
✓ Criteria 6-8 Analysis
✓ De-conflicted w/JCSGs
✓ De-conflicted w/MilDeps

Draft Deliberative Document –For Discussion Purposes Only –Do Not Release Under FOIA

Establish Joint Strike Fighter Maintenance Training Center (MTC) (NAS Pensacola, FL)

Scenario	Drivers/Assumptions
▪ Realign NAS Pensacola, FL by establishing a Joint Strike Fighter Maintenance Training Center ▪ Intent is to consolidate Navy, Air Force, and Marine Corps maintenance training for the Joint Strike Fighter at one location	▪ Principles: Organize and Train ▪ Transformational Options: Establish Centers of Excellence for Joint or Inter-service education and training by combining or co-locating like schools ▪ Establish "joint" officer and enlisted specialized skill training (initial skill, skill progression & functional)
Justification/Impact	**Potential Conflicts**
▪ Train as we fight "jointly" ▪ Uses Inter-service Training Review Organization as the baseline ▪ Leverages existing maintenance training infrastructure and resources ▪ Eliminates redundancy	▪ Requires shift in service paradigm ▪ JPO Integrated Training Center Concept requires an additional $15M nonrecurring cost for change to Maintenance Training Center

Approved__x___Disapproved_____Revised_____Deferred_____

Draft Deliberative Document –For Discussion Purposes Only –Do Not Release Under FOIA

Candidate # E&T 0057

Candidate Recommendation: Realign NAS Pensacola, FL by establishing a Joint Strike Fighter Maintenance Training Center.

Justification

- ✓ Realign Pensacola, FL by establishing a Joint Strike Fighter Maintenance Training Center
- ✓ Intent is to consolidate Air Force, Navy, and Marine Corps maintenance training for the Joint Strike Fighter at one location

Military Value

- ✓ NAS Pensacola:
  - ✓ Initial Skills 59.05
  - ✓ Skills Progression 45.52
  - ✓ Functional 39.25

Payback

✓ 1- Time Cost:	$ 15.472M
✓ Net Implementation Savings	$ 109.576M
✓ Annual Recurring Costs	$ 15.409M
✓ Payback Period	Never
✓ NPV (cost)	$ 43.771M

Impacts

- ✓ Criterion 6: No issues
- ✓ Criterion 7: No issues
- ✓ Criterion 8: No issues

✓ Strategy
✓ COBRA
✓ Capacity Analysis / Data Verification
✓ Military Value Analysis / Data Verification
JCSG/MilDep Recommended
✓ Criteria 6-8 Analysis
✓ De-conflicted w/JCSGs
✓ De-conflicted w/MilDeps

Draft Deliberative Document –For Discussion Purposes Only –Do Not Release Under FOIA

ROI Summary

Scenario	One-Time Costs	Steady-State Costs	ROI Years	20 Year NPV
E&T 0055 (Eglin)	$187.222	$14.302	Never	$191.480
E&T 0056 (Sheppard)	$92.000	$15.518	Never	$117.785
E&T 0057 (Pensacola)	$15.472	$15.409	Never	$43.771

All Dollars Shown in Millions

Note: Costs are positive values and savings are negative values

Disposition of Billets/Positions

Scenario		OFF	ENL	CIV	STU	TOT
E&T 0055 (Eglin)	Eliminate	0	0	0		0
	Move	307	210	84	856	1457
E&T 0056 (Sheppard)	Eliminate	0	0	0		0
	Move	28	338	27	1392	1785
E&T 0057 (Pensacola)	Eliminate	0	0	0		0
	Move	28	338	27	1392	1785

One-Time Costs/Savings Summary

One - Time Costs/Savings FY 06 – FY11								
Scenario	Const	Pers	Ovhd	Move	Other	Total Costs	Svgs	Net Costs
E&T 0055 (Eglin)	$167.889	$0.075	$2.470	$5.889	$10.898	$187.222	$166.889	$20.322
E&T 0056 (Sheppard)	$86.420	$0.150	$3.028	$2.401	$0	$92.000	$165.844	-$73.844
E&T 0057 (Pensacola)	$10.866	$0.150	$1.914	$2.520	$0	$15.472	$165.844	-$150.372

All Dollars Shown in Millions

Draft Deliberative Document –For Discussion Purposes Only –Do Not Release Under FOIA

MILCON Summary

Construction FAC Description				
Scenario: E&T 0055 (Eglin)	UM	New	Rehab	Cost
Aviation Instructional and Maintenance Facility	SF	438,336	0	$80.762
Aviation Instructional and Maintenance Facility	SF	0	123,712	$12.719
Storage Buildings	SF	12,725	0	$1.871
General Administration Building	SF	111,830	0	$18.957
Enlisted Housing & Dining Facility	SF	201,789	0	$28.232
Religious Facility, Child Care, Library, Family Center, Fitness Center, Recreation Center	SF	87,287	0	$17.248
TOTAL				$167.889

All Dollars Shown in Millions

Draft Deliberative Document –For Discussion Purposes Only –Do Not Release Under FOIA

Draft Deliberative Document –For Discussion Purposes Only –Do Not Release Under FOIA

MILCON Summary

Construction FAC Description				
Scenario: E&T 0056 (Sheppard)	**UM**	**New**	**Rehab**	**Cost**
Instructional Maintenance Simulator Facility	SF	175,790	0	$42.801
General Administration Building	SF	97,297	0	$19.173
Dining Facility	SF	13,973	0	$4.632
Religious Facility, Child Care, Library, Family Center, Fitness Center, Recreation Center	SF	85,660	0	$19.814
TOTAL				$86.420
Scenario: E&T 0057 (Pensacola)	**UM**	**New**	**Rehab**	**Cost**
General Administration Building	SF	84,000	0	$3.568
Instructional Maintenance Simulator Facility	SF	164,900	0	$7.318
TOTAL				$10.886

All Dollars Shown in Millions

Draft Deliberative Document –For Discussion Purposes Only –Do Not Release Under FOIA

Recurring Costs/Savings Summary

Recurring Costs/Savings FY 06 – FY11						
Scenario	O&M	Mil Pers	Other	Total Costs	Svgs	Net Costs
E&T 0055 (Eglin)	$42.027	$21.279	0	$63.307	$22.960	$40.347
E&T 0056 (Sheppard)	$27.807	$32.182	0	$59.989	$17.263	$42.726
E&T 0057 (Pensacola)	$20.331	$28.439	0	$48.770	$7.974	$40.796

All Dollars Shown in Millions

Draft Deliberative Document –For Discussion Purposes Only –Do Not Release Under FOIA

Key Elements of Recurring Savings

Scenario: E&T 0055 (Eglin)		
Element	Description	Total Recurring Savings ($M) FY06-FY11
O&M	BOS	$10.125
O&M	Civilian Salary	$.057
Military Personnel	Housing Allowance	$12.778
Scenario: E&T 0056 (Sheppard)		
O&M	BOS	$12.414
O&M	Civilian Salary	$0.098
Military Personnel	Housing Allowance	$4.751

Scenario: E&T 0057 (Pensacola)		
O&M	BOS	$2.610
O&M	Civilian Salary	$0.098
Military Personnel	Housing Allowance	

All Dollars Shown in Millions

Draft Deliberative Document –For Discussion Purposes Only –Do Not Release Under FOIA