BRAC 2005
EDUCATION AND TRAINING JOINT CROSS-SERVICE GROUP
MEETING MINUTES OF February 2, 2005

The Assistant Secretary of the Air Force (Manpower and Reserve Affairs), Mr. Dominguez, presided over the 45th meeting of the E&T JCSG as acting chair. Attendee List is at Attachment 1. The following is a summary of discussions (Briefing slides at Attachment 2):

- Mr. Dominguez opened the meeting by welcoming participants. Weekly Wednesday meetings are cancelled; however, regularly scheduled Thursday-meetings will remain on the calendar until further notice. The E&T JCSG currently has 58 declared scenarios: 13 have been deleted, 21 deactivated, 13 are pending E&T JCSG deliberation and 11 have been approved as Candidate Recommendations. It is anticipated that 6-8 candidate recommendations will be ready for presentation to the ISG on February 11, 2005.

- The Professional Development Education Subgroup (BG Maffey and Col Lynes) briefed eleven JPME/PME scenarios for E&T JCSG consideration. The subgroup performed analysis using both certified data and subgroup-refined data. Col Lynes indicated the subgroup could not gain consensus on the applied educational adjustments (specifically with faculty and admin support to Ft McNair). It was noted by the group that $50M would need to be removed from both analyses since it was erroneously included in the PDE Subgroup COBRA runs as MILCON cost avoidance dollars as indicated in the Army FYDP 2011 for the Army War College. *(Note: guidance provided in the OSD BRAC Policy Memo #3 – Selection Criteria 5 (COBRA), page 6, which discusses Military Construction Cost Avoidances.)* This will change the ROIs for each of the eleven JPME/PME scenarios. The E&T JCSG:
  - ***Tasked the PDE Subgroup to rerun a COBRA analysis against approved JPME/PME scenarios once the Service-specific Faculty and Administrative support issues were resolved with the Navy and Air Force.***
  - ***Deactivated E&T-0026 "Consolidate Senior Level Colleges at Fort McNair", E&T-0027 "Consolidate Senior Level Colleges at Quantico" and E&T-0028 "Consolidate Senior Level Colleges at Fort Eustis."*** Scenarios (regardless of location) were deactivated under the premise that consolidation would reduce the effectiveness of the Service Chiefs to control the PME curriculum within a JPME-predominant curriculum.
  - ***Deactivated E&T-0035, "Realign SSC under NDU and Co-locate at Quantico."*** Although Quantico has a higher Military Value Score (MVS), this scenario was deactivated due to longer return on investment (ROI) and

realized less long term savings (20-year Net Present Value), as compared to other scenarios with certified data.

- ***Deactivated E&T-0036, "Realign SSC under NDU and Co-locate at Fort Eustis"*** based on a low Military Value Score (MVS), longer return on investment (ROI), and realized less long term savings (20-year Net Present Value), as compared to other scenarios.
- ***Deactivated E&T-0033, "Realign SLC under NDU and Co-locate at Quantico."*** Although Quantico has a higher Military Value Score (MVS), this scenario was deactivated due to longer return on investment (ROI) and realized less long term savings (20-year Net Present Value), as compared to other scenarios with certified data.
- ***Deactivated E&T-0034, "Realign SLC under NDU and Co-locate at Fort Eustis*** based on a low Military Value Score (MVS), longer return on investment (ROI), and realized less long term savings (20-year Net Present Value), as compared to other scenarios using certified data.
- ***Deactivated E&T-0024, "Realign Service ILC/SSC with Service Academies"*** based on a low Military Value Score (MVS), longer return on investment (ROI), and realized less long term savings (20-year Net Present Value), as compared to other scenarios.
- ***Approved E&T-0032, "Realign SLCs under National Defense University (NDU) and Co-locate at Fort McNair" as the recommended "best choice" option for ISG consideration***. This joint-centric candidate recommendation enhances joint-ness, maximizes professional development, administrative, and academic synergies by combining similar education programs under one administration, merges common support functions, reduces resource requirements and establishes a Joint/Strategic Center of Excellence in the National Capitol Region. However, this will create additional costs for the Air Force and DON due to lost of faculty and administrative support synergies with the presently co-located ISC's. This Candidate Recommendation (CR) also depends on National Defense University's (NDU) future use of the Lincoln Hall. ***Principals tasked the subgroup to maintain the standard 3.5/1 student/faculty ratio for Senior Service Colleges (SSCs) and 4.0/1 student faculty ratio at the Immediate Service Colleges as well as assure the 60/40 host Service/non-host Service ratio. The subgroup should also use the Army War College student/faculty to administrative support ratio (3.4 to 1) as the minimum baseline.*** Additionally, two critical environmental impacts (Air Quality and Land Use Constraints) will need to be explored/resolved by the subgroup prior to Legal Review. It should be noted that although the majority of the E&T JCSG principals approved E&T-0032 as the "best choice", the Army and Air Force did not agree.
- ***Approved E&T 0058, "Realign USAWC with USACGSC and co-locate at Fort Leavenworth."*** This Service-centric candidate recommendation

enhances Service synergies for the Army continuum of education and closely parallels the alignment of PME programs within Air University at Maxwell AFB, AL and DON at Newport, RI. ***The PDE Subgroup was tasked to "de-couple" the Army War College functions from the closure function of the Carlisle Barracks and provide only the COBRA analysis of movement of the PME function to Ft Leavenworth.*** This would allow the E&T JCSG to make comparisons of the scenarios on equal footing. This Service-centric CR also enables USA-0136 (the Army's closure of Carlisle Barracks).

- ***Approved E&T-0025, "Realign SSC in place" (coupled with E&T-0058) as the second recommended option for ISG consideration***. This is a modified status quo approach that involves no physical movement of existing War Colleges but alters command structure from Service-centric toward joint-centric (NDU). The only additional cost would be incurred by a small manpower cell at the National Defense University.
- The PDE Subgroup will provide updates to the E&T JCSG JPME/PME scenario tasking(s), and an updated chart to reflect the comparisons of the scenarios with updated/corrected data.

(Note: Due to the complexity of the core issue of JPME/PME, the JCSG approved forwarding the three preceding approaches to the ISG in priority order. 1. E&T–0032; 2. E&T–0025 & 0058, combined; and, 3. E&T–0025, only.)

- The E&T JCSG delayed decision on E&T JCSG Scenario-0041 "Consolidated Navy/Marine Crypto/Intelligence Training at Dam Neck, VA" pending receipt of Navy information (from the Navy BRAC-office to the Navy E&T JCSG Principal).

- Navy BRAC office presented 4 requests for E&T JCSG consideration. Summary of discussions with E&T JCSG deliberations follows (Navy memos are at attachment 3):
  - Navy recommended an alternate scenario to DON-0033, "Close SUBASE New London, CT. Relocate assigned submarines to Naval Station Norfolk, VA and SUBASE Kings Bay, GA." The proposed option would relocate the Naval Submarine School and Center for Submarine Learning to Newport, RI vice Kings Bay, GA. E&T JCSG would maintain over-watch on both the candidate recommendation and the alternative scenario. ***E&T JCSG agreed with this Navy proposal.***
  - ***Navy requested a change to E&T-0004, "Establish Joint Center of Excellence for Supply (Logistics) Training at Ft Lee, VA"*** (deactivated 13 Jan 05) to address only the Navy Supply Corps School at Athens, GA. This would permit the Navy to close a single function installation (Athens, GA). ***E&T JCSG recommended Navy develop a new scenario that would move the Navy Supply Corps School from one Navy installation to another location with E&T JCSG over-watch.***

with the Navy to get data on number of Navy-unique programs and total student load for discussion at the next E&T JCSG meeting.

- Navy requested E&T JCSG to consider establishing a Joint Survival, Evasion, Resistance and Escape School. ***The E&T JCSG tasked the SST Subgroup to work with DON to determine if the Navy wanted to pursue a joint school (SST would develop scenario) or a co-located school (DON would develop scenario with SST over watch).*** After the meeting, SST confirmed that the Navy is interested in a co-location with the Air Force as one option and is also looking at other Navy locations. As a result, the Navy will proceed with Navy scenarios under E&T JCSG over watch. SST has offered the Navy assistance as required and will assist Air Force BRAC where their expertise may be helpful.

The next scheduled meeting of the E&T JCSG is Thursday, February 10, 2005.

Approved: _____
MICHAEL L. DOMINGUEZ
Assistant Secretary of the Air Force
(Manpower and Reserve Affairs)
Acting Chairman, Education & Training
Joint Cross-Service Group

Attachments:
1. List of Attendees, February 2, 2005
2. Briefing Slides
3. Navy Memo, dated February1, 2005

Copies:
1. OSD BRAC Office
2. E&T JCSG Coordination Team
3. DoD IG

BRAC 2005
EDUCATION AND TRAINING JOINT CROSS-SERVICE GROUP
February 2, 2005

Attendees

Members:

- Mr. Michael L. Dominguez, Assistant Secretary of the Air Force (Manpower and Reserve Affairs)
- VADM G. Hoewing, USN, Chief Navy Personnel (N1)
- BG Tom Maffey, USA, JCS VDJ-7
- BGen Thomas Conant, USMC, Deputy Director, Training and Education Command
- BG Louis Weber, Director, Training Army G-3 (DAMO-TR)

Others:

- Mr. Jim Gunlicks, USA, Army G-3 (DAMO-TR)
- Mr. Bob Howlett, E&T JCSG Coordination Team
- Ms. Nancy Weaver, E&T JCSG Coordination Team
- Ms. Marsha Warren, Ctr., E&T JCSG Coordination Team
- RADM George Mayer, USN, Chairman, Flight Training Subgroup
- Col Mike Massoth, USMC, Deputy Director, Training and Education Command
- Col Joanna Shumaker, USAF, AF DPX
- CAPT Gene Summerlin, USN, NAVY BRAC, Flight Training Subgroup
- Col Jimmie Simmons, USAF, AETC/DOR, Flight Training Subgroup
- Mr. Bob Harrison, USA, G3 Training
- Col James Briggs, USAF, AETC/DOO, Specialized Skill Training Subgroup
- CAPT Cathy Osman, USN, JCS/J-7, PDE Subgroup
- Col J Lynes, USMC, JCS/J-7, PDE Subgroup
- Col Sam Walker, USAF, PDE Subgroup
- Col Bob Yauch, AF, AETC/AU, PDE Subgroup
- Mr. Jose Alvarez, USA, Army G-3, PDE Subgroup
- Capt William Taylor, USA, JCS/J-7, PDE Subgroup
- Maj Jake Silberfarb, USMC, PDE Subgroup
- Mr. Brian Buzzell, OSD BRAC Contract Support
- Ms. Beth Schaefer, DODIG
- Lt Col John Vignali, USA, Army TABS

Attachment 1

E&T JCSG Principals Meeting

February 2, 2005

Mr. Mike Dominguez
Acting Chair, E&T JCSG

Agenda

- Status Update
- Professional Development Education Scenarios
- Revisit E&T JCSG (SST) - 0041
- Navy Proposals
- Wrap-up

E&T JCSG Schedule - February

Monday	Tuesday	Wednesday	Thursday	Friday	Sat	Sun
	1	2 **E&T JCSG** **1300-1530 4E869** **PDE**	3	4 ISG Mtg 1030-1200	5	6
7 E&T POC Mtg	8	9 **Red Team Session**	10 **E&T JCSG** **1300-1530** **(2E223)**	11 ISG Mtg 1030-1200 *(E&T JCSG Briefs)*	12	13
14	15 E&T POC Mtg	16	17 ***E&T JCSG*** ***1300-1530*** ***2E223***	18 ISG Mtg (Paper Meeting)	19	20
21 **President's Day**	22 E&T POC Mtg	23	24 **E&T JCSG** **1300-1530** **2E223**	25 ISG Mtg 1030-1200 *(E&T JCSG Briefs)*	26	27
28						

E&T JCSG Schedule – March

Monday	Tuesday	Wednesday	Thursday	Friday	Sat	Sun
	1	2	3	4	5	6
7	8 E&T POC Mtg	9	10 **E&T JCSG** **1300-1530**	11 ISG Mtg 1030-1200	12	13
14	15 E&T POC Mtg	16	17 **E&T JCSG** **1300-1530**	18 ISG Mtg 1030--1200	19	20
21	22 E&T POC Mtg	23	24 **E&T JCSG** **1300-1530**	25 ISG Mtg 1030-1200	26	27 **Easter**
28	29 E&T POC Mtg	30	31 **E&T JCSG** **1300-1530**	1 ISG Mtg 1030-1200	2	3

E&T JCSG Review

Scenario no.		Status		Candidate Recommendations
E&T-0003	PDE			CR approved, 5 Jan 05
E&T-0004	SST		Deactivated, 13 Jan 05	
E&T-0005	SST		Deactivated, 6 Jan 05	Hold contingent to #0053
E&T-0006	FT		Deactivated, 27 Jan 05	
E&T-0007	FT	Deleted		
E&T-0008	FT	Deleted		
E&T-0009	Ranges (T&E)	Deleted		
E&T-0010	Ranges (Tng)		(ON HOLD)	
E&T-0011	Ranges (Tng)	Deleted		
E&T-0012	PDE			CR approved, 19 Jan 05
E&T-0013	PDE		Deactivated, 12 Jan 05	
E&T-0014	PDE/SST			CR approved, 12 Jan 05
E&T-0015	PDE/SST		Deactivated, 26 Jan 05	
E&T-0016	SST			CR approved, 12 Jan 05 -AF/N
E&T-0017	SST		Deactivated, 12 Jan 05	
E&T-0018	SST		Deactivated, 13 Jan 05	

E&T JCSG Review

Scenario no.		Status		Candidate Recommendations
E&T-0019	SST	Deleted		
E&T-0020	FT	Deleted		
E&T-0021	Ranges (T&E)	Deleted	Remanded to T JCSG, 19 Jan 05	
E&T-0022	PDE		Deactivated, 5 Jan 05	Hold contingent to #0003
E&T-0023	PDE		Deactivated, 5 Jan 05	
E&T-0024	PDE			
E&T-0025	PDE			
E&T-0026	PDE			
E&T-0027	PDE			
E&T-0028	PDE			
E&T-0029	SST			CR approved 16/21 Dec 04
E&T-0030	SST		Deactivated, 13 Jan 05	
E&T-0031	SST		Deactivated, 12 Jan 05	
E&T-0032	PDE			
E&T-0033	PDE			
E&T-0034	PDE			

E&T JCSG Review

Scenario no.		Status		Candidate Recommendations
E&T-0035	PDE			
E&T-0036	PDE			
E&T-0037	Ranges (Tng)			CR approved, 26 Jan 05 Add support IAW 19 Jan 05
E&T-0038	Ranges (Tng)			CR approved, 26 Jan 05 Add support IAW 19 Jan 05
E &T-0039	SST			CR approved, 6 Jan 05
E&T-0040	SST	Deleted		
E&T-0041	SST		PENDING	(DoN data 13/19/26/27 Jan 05)
E&T-0042	SST		Deactivated, 13 Jan 05	
E&T-0043	SST		Deactivated, 12 Jan 05	
E&T-0044	FT		Deactivated, 27 Jan 05	
E&T-0045	FT		Deactivated, 27 Jan 05	
E&T-0046	FT			CR approved, 27 Jan 05
E&T-0047	FT	Deleted (ISG 14 Jan)		
E&T-0048	FT	Deleted (ISG 14 Jan)		

E&T JCSG Review

Scenario no.		Status		Candidate Recommendations
E&T-0049	FT		Deactivated, 27 Jan 05	
E&T-0050	FT		Deactivated, 27Jan 05	
E&T-0051	Ranges (T&E)		Deactivated, 26 Jan 05	
E&T-0052	FT			CR approved, 27 Jan 05
E&T-0053	SST			CR approved, 6 Jan 05
E&T-0054 *		Deleted * ENTRY ERROR		
E&T-0055	SST		Deactivated, 27 Jan 05	
E&T-0056	SST		Deactivated, 27 Jan 05	
E&T-0057	SST		Deactivated, 27 Jan 05	
E&T-0058	PDE			
E&T 0059	SST	Deleted, 19 Jan 05		
E&T 0060	SST	Deleted, 19 Jan 05		
TOTALs:	58	-13	-21	-11 = 13 pending

PDE SUBGROUP Scenario Timeline

(Graduate Education/OFTE)

Tracking Number	Scenario	SDC at MilDep	SDC at Activity	MilDep to JCSG	Initial COBRA Review	JCSG COBRA OK	Criteria 6&7	Criteria 8	Legal Rev	ISG Approval
0003	Privatize PDE Function conducted at AFIT and NPS	1 DEC	1 DEC	13 DEC	14 Dec	27 Dec	27 Dec	27 Dec	26 Jan	11 Feb
0012	Realign DRMI with DAU at Ft. Belvoir, VA	23 NOV	23 NOV	13 DEC	28 Dec	28 Dec	28 Dec	28 Dec	1 FEB	11 Feb
0013	Re-locate DCAI to Ft. Belvoir, VA	23 NOV	23 NOV	4 JAN	6 Jan	11 Jan	11 Jan	11 Jan	DEACTIVATED / 12 Jan	
0014	Establish Joint Center of Excellence for Religious SST/PDE Functions (Ft. Jackson)	1 DEC	1 DEC	27 DEC	4 Jan	11 Jan	11 Jan	11 Jan	1 FEB	11 Feb
0015	Establish Joint Center of Excellence for Legal SST/PDE Functions (Maxwell AFB)	1 DEC	1 DEC	13 DEC	26 Jan	26 Jan	26 Jan	26 Jan	DEACTIVATED / 26 Jan	
0022	Consolidate AFIT and NPS PDE Function at NPS	1 DEC	1 DEC	13 DEC	14 Dec	28 Dec	28 Dec	28 Dec	ON HOLD PENDING #0003	
0023	Consolidate NPS and AFIT with Service Academies	6 DEC	6 DEC	17 DEC	29 Dec	06 Jan	6 Jan	DEACTIVATED / 5 Jan		

PDE SUBGROUP Scenario Timeline

(JPME / PME)

Tracking Number	Scenario	SDC at MilDep	SDC at Activity	MilDep to JCSG	Initial COBRA Review	JCSG COBRA OK	Criteria 6&7	Criteria 8	Legal Rev	JCSG Final Approval
0024	Realign Service ILC & SSC with Service Academies	6 DEC	6 DEC	15 Jan	17Jan	2 Feb	2 Feb	2 Feb	9 Feb	25 Feb
0025	Realign SSCs in Place	1 DEC	1 DEC	13 DEC	15 Dec	2 Feb	2 Feb	2 Feb	9 Feb	25 Feb
0026	Consolidate SLCs at Ft. McNair	1DEC	1 DEC	15 DEC	15 Dec	2 Feb	2 Feb	2 Feb	9 Feb	25 Feb
0027	Consolidate SLCs at Quantico	1DEC	1 DEC	17 DEC	21 Dec	2 Feb	2 Feb	2 Feb	9 Feb	25 Feb
0028	Consolidate SLCs at Ft. Eustis	1DEC	1 DEC	20 DEC	29 Dec	2 Feb	2 Feb	2 Feb	9 Feb	25 Feb
0032	Realign SLCs under NDU and co-locate at Ft. McNair	1DEC	1 DEC	15 DEC	15 Dec	2 Feb	2 Feb	2 Feb	9 Feb	25 Feb
0033	Realign SLCs under NDU and co-locate at Quantico	1DEC	1 DEC	13 DEC	15 Dec	2 Feb	2 Feb	2 Feb	9 Feb	25 Feb
0034	Realign SLCs under NDU and co-locate at Ft. Eustis	1DEC	1 DEC	20 DEC	21 Dec	2 Feb	2 Feb	2 Feb	9 Feb	25 Feb
0035	Realign SSCs under NDU and co-locate at Quantico	30 NOV	1 DEC	17 DEC	20 Dec	2 Feb	2 Feb	2 Feb	9 Feb	25 Feb
0036	Realign SSCs under NDU and co-locate at Ft. Eustis	30 NOV	1 DEC	17 DEC	20 Dec	2 Feb	2 Feb	2 Feb	9 Feb	25 Feb
0058	Realign USAWC with USACGSC and co-locate at Ft. Leavenworth	30 NOV	1 DEC	13 DEC	15 Dec	15 Dec	15 Dec	15 Dec	9 Feb	25 Feb

PDE ISSUES

- **Scenarios in Tension**
  - **Update: JPME / PME Scenarios**
- **MILCON for SSC's**
  - **Update: Closed**
- **Potential DRMI/DAU Disconnect**
  - **Update: Closed**
- **Lincoln Hall at Ft McNair**
  - **Update: NDU collected the data, projected to get "pushed" through Army TAB channels**

Scenario Recommendations

Forward Three Courses of Action to ISG

1. **Joint Centric Scenario**

   - Scenario 0032: Realign and Co-locate SLCs at Ft McNair

2. **Service Centric**

   - Scenario 0058: Realign USAWC with USACGSG and Co-locate at Ft Leavenworth

3. **Modified Status Quo**

   - Scenario 0058: Realign USAWC with USACGSG and Co-locate at Ft Leavenworth

   - Scenario 0025: Realign SSCs in Place

Professional Development Education

JPME/PME Scenario Philosophy

- **Joint Centric**
  - **Proximity to Joint / Warfighting Center of Excellence (e.g. NCR, NORTHCOM, CENTCOM, JFCOM)**
  - **Focus on level of education**
  - **Potentially leads to separation of ILC and SSC**
- **Service Centric**
  - **Proximity to Service Centers of Excellence (e.g. Service Academies, Doctrine Centers, Wargaming Centers)**
  - **Focus on service education requirements**
  - **Supports status quo**
  - **Potentially leads to co-location of ILC and SSC**
- **SSC Joint Centric / ILC Service Centric**

SLCs: Service Centric vs. Joint Centric

Service Centric

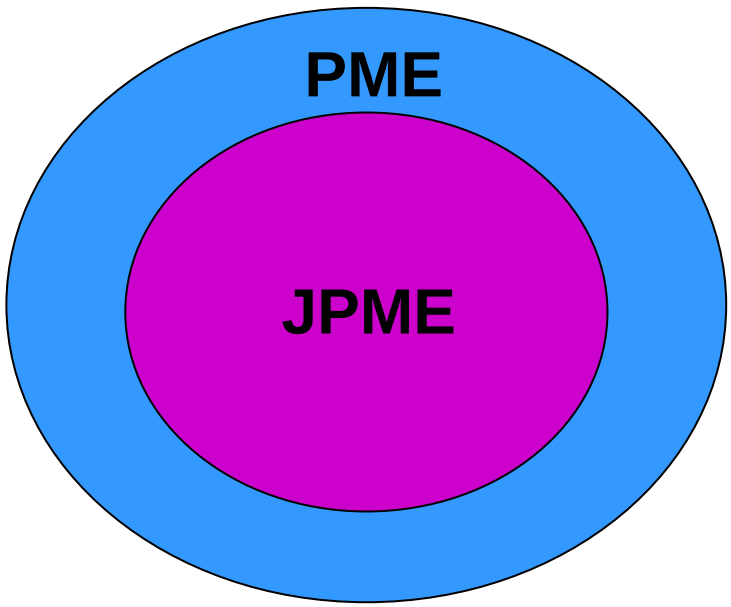

"JPME Veined in PME"

Joint Centric

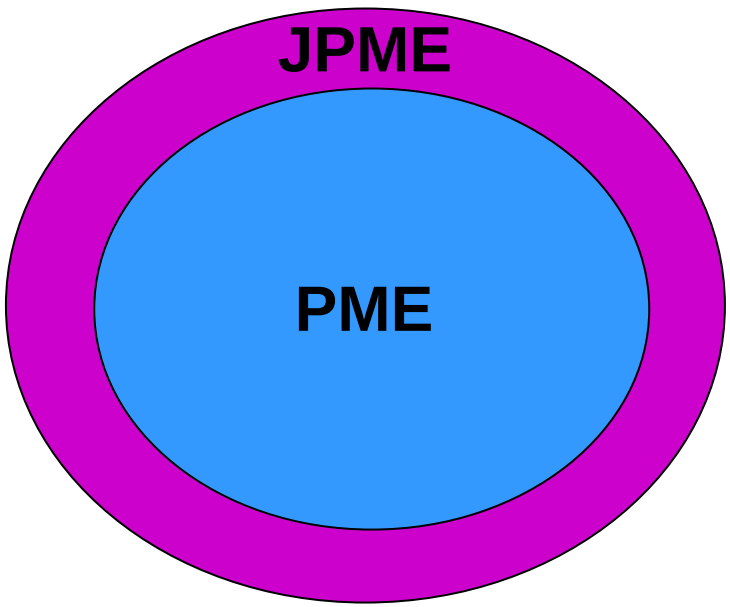

"PME Veined in JPME"

Service Centric vs Joint Centric Tipping Point

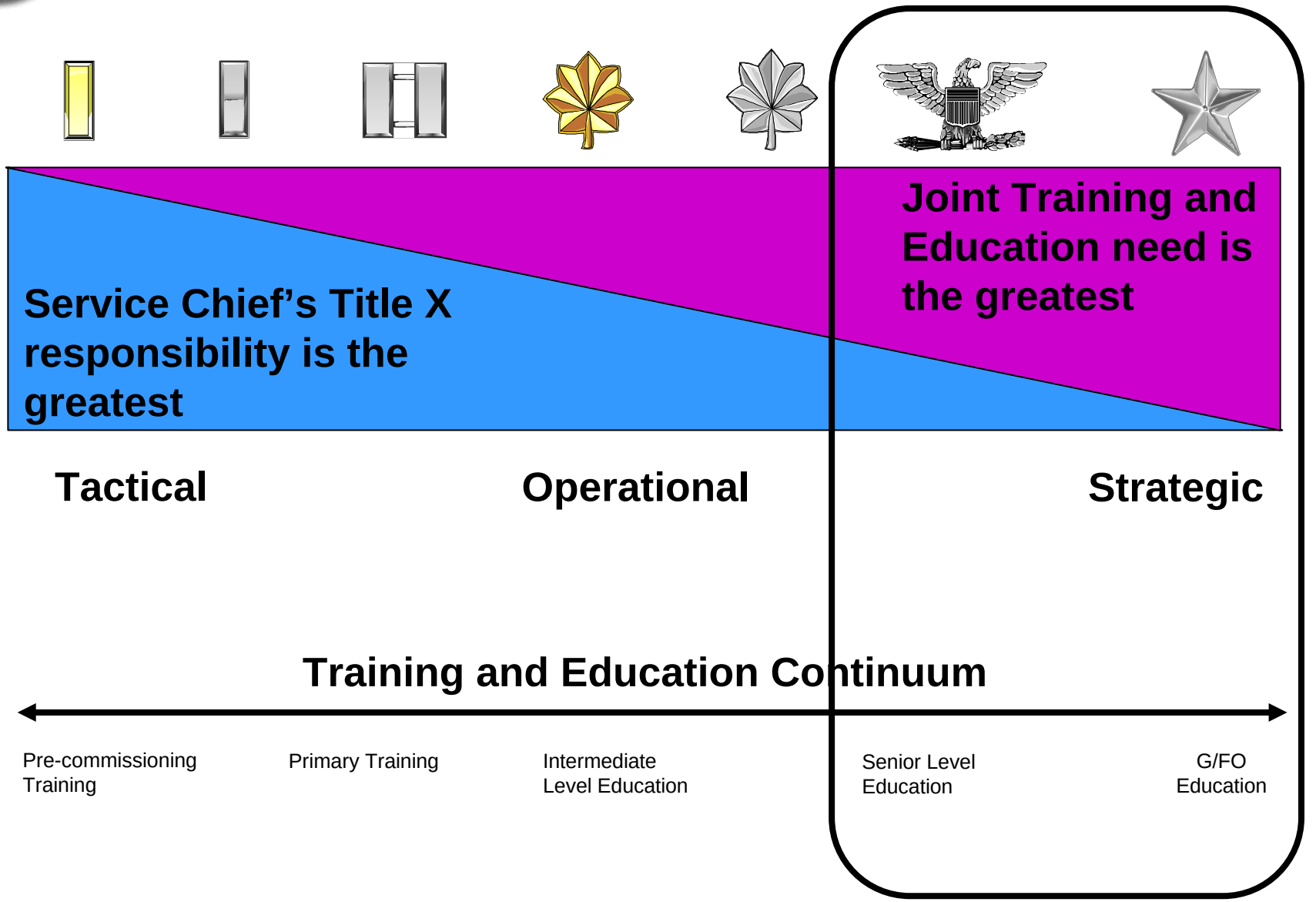

Pros / Cons

Service Centric

- ✚ Service educational focus provides strong service PME base for senior officers
- ✚ Co-location of Strategic, operational, and tactical level education allows synergy throughout the spectrum of service education
- ✚ Proximity to Service Centers of Excellence allows increased influence of current service concepts
- ✚ Service Chiefs control student throughput and curriculum to fulfill service needs
- ▬ Service educational focus limits the joint perspective and development of JPME base for senior officers

Joint Centric

- ✚ Joint educational focus provides strong JPME base for senior officers
- ✚ Co-location of all service strategic education allows synergy between all services at the senior level
- ✚ Proximity to Joint/Strategic Center of Excellence allows increased influence of current joint concepts
- ✚ CJCS controls student throughput and curriculum to fulfill Joint needs
- ▬ Joint educational focus limits the service perspective and the development of service PME for senior officers

Realign and Co-locate vs. Consolidation

Realign and Co-locate

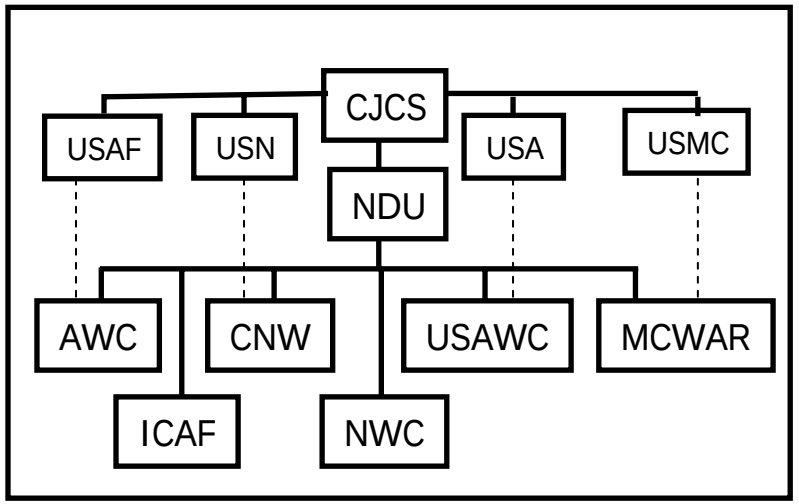

- **Coordinated Functions**
- **CJCS controls JPME curriculum**
- **Service Chiefs control PME curriculum**

Consolidation

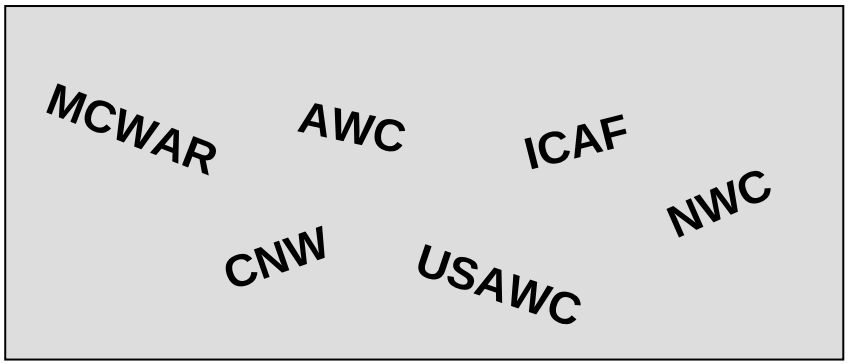

- **Integrated Functions**
- **CJCS controls entire curriculum**
- **Requires 18 fewer administrative personnel than Realign and Co-locate**

E&T 0032

Senior level education will be provided by multiple colleges under the National Defense University. The colleges will report to the National Defense University chain of command and will combine all common support requirements. **The Army will be the proponent for a Land Centric college. The Air Force will be the proponent for an Air Centric college. The Navy will be the proponent for a Maritime Centric college. The Marine Corps will be the proponent for an Expeditionary Centric College.** All of the colleges will teach a common Joint Professional Military Education curricula controlled by the Chairman of Joint Chiefs of Staff. Professional Military Education curricula will be controlled by the appropriate proponent Service Chief. Joint Forces Staff College will remain an independent source of Joint Professional Military Education Level II for Joint Specialty Officers.

E&T JCSG-PDE JPME/PME Scenario Comparisons

JPME/PME Scenarios	MilVal Score	One-Time Costs	Steady-State Savings	ROI Years	20 Yr NPV	Billets Eliminated	Total MILCON
E&T 058, Realign USAWC with USACGSC and co-locate at Ft Leavenworth	59.8	69.8M	-48.4M	1	-554.0M	485	36.6M
E&T 032, Realign SLCs under NDU and co-locate at Ft McNair	50.1	91.7M (85.1M) (117.4M)	-34.6M (-11.0M) (-10.5M)	1 (2) (4)	-408.2M (-123.3M) (-85.5M)	307 (264) (264)	14.6M (14.6M) (47.2M)
E&T 025, Realign SSCs in Place	---		None	Never	6M		

E&T JCSG-PDE JPME/PME Scenario Comparisons

JPME/PME Scenarios	MilVal Score	One-Time Costs	Steady-State Savings	ROI Years	20 Yr NPV	Billets Eliminated	Total MILCON
E&T 026, Consolidate SLCs at Ft McNair	50.1	91.1M (84.6M)	-36.0M (-12.5M)	1 (2)	-426.2M (-142.4M)	321 (271)	14.2M (14.2M)
E&T 027, Consolidate SLCs at Quantico	62.8	176.8M (170.6M)	-42.5M (-18.3M)	2 (5)	-432.5M (-139.6M)	484 (434)	99.2M (99.2M)
E&T 028, Consolidate SLCs at Eustis	23.2	172.6M (167.2M)	-43.7M (-19.5M)	2 (4)	-452.0M (-158.6M)	487 (437)	88.7M (88.9M)
E&T 035, Realign SSCs under NDU and co-locate at Quantico	62.8	150.2M (144.7M)	-29.6M (-6.0M)	2 (17)	-285.2M (0.2M)	304 (261)	77.3M (77.3M)
E&T 036, Realign SSCs under NDU and co-locate at Ft Eustis	23.2	140.2M (134.8M)	-30.8M (-7.1M)	2 (11)	-309.6M (-23.8M)	307 (264)	67.4M (67.4M)

E&T JCSG-PDE JPME/PME Scenario Comparisons

JPME/PME Scenarios	MilVal Score	One-Time Costs	Steady-State Savings	ROI Years	20 Yr NPV	Billets Eliminated	Total MILCON
E&T 033, Realign SLCs under NDU and co-locate at Quantico	62.8	176.1M (170.6M)	-41.2M (-17.6M)	2 (5)	-416.1M (-130.8M)	470 (427)	99.2M (99.2M)
E&T 034, Realign SLCs under NDU and co-locate at Ft Eustis	23.2	172.3M (166.2M)	-42.5M (-18.8M)	2 (4)	-436.7M (-148.9M)	473 (430)	88.5M (88.5M)
E&T 024, Realign Service ILC/SSC with Service Academies	---	704.4M	-9.8M	100+	522.5M	402	544.7M

Realign SLCs under NDU and Co-locate at Ft McNair (E&T 0032)

Proposal	Drivers/Assumptions

▪ Realign USAWC, AWC, CNW, MCWAR under NDU and co-locate at FT McNair
▪ Gaining Installations: Ft McNair, Washington D.C.
▪ Losing Installations: Carlisle Barracks, PA; NS Newport, RI; MCB Quantico, VA; Maxwell AFB, AL
	▪ TO 36: Establish Centers of Excellence for Joint or inter-service education by combining or co-locating like schools.
	▪ Considerations:
	  ▪ R&T #7 & # 12
	  ▪ Organize #4

Justification/Impact	**Potential Conflicts**
▪ Maximize professional development, administrative, and academic synergies by combining similar education programs under one administration ▪ Merges common support functions and reduces resource requirements. ▪ NCR - Strategic Center of Excellence	▪ Capacity at gaining installation ▪ Service equities and education requirements ▪ Status of tenant activities ▪ TO 13: Rationalize presence in DC area ▪ TO 69: Co-locate service professional military education at the intermediate and senior level. ▪ Deconflict with HSA

Candidate E&T 0032

Candidate Recommendation: Realign Carlisle Barracks, PA; Maxwell Air Force Base, AL; Naval Station Newport, RI; and Marine Corp Base Quantico by moving the United States Army War College, Air War College, College of Naval Warfare, and Marine Corps War College to Fort McNair, Washington D.C. and realigning under the National Defense University.

Justification

- ✓ Maximize professional development, administrative, and academic synergies by combining similar education programs under one administration
- ✓ Merges common support functions and reduces resource requirements.
- ✓ NCR - Strategic Center of Excellence

Military Value

✓ MCB Quantico	62.8	
✓ Ft. Leavenworth	59.8	
✓ Maxwell AFB	54.1	
✓ Carlisle Barracks		53.8
✓ NAVSTA Newport		52.7
✓ Ft. McNair	50.1	
✓ Ft. Eustis		23.2

Payback

▪ One-time cost:	$91.7M
▪ Net implementation savings:	$-139.4M
▪ Annual recurring savings:	$-34.6M
▪ Payback time:	1 Year
▪ NPV (savings):	$-408.2M

Impacts

- Criterion 6:
  - Newport -1122 (485 Direct; 737 Indirect) -0.13%
  - Montgomery -851 (500 Direct;351 Indirect) -0.41%
  - Harrisburg -1299 (747 Direct; 552 Indirect) -0.34%
  - DC-VA-MD +2368 (1420 Direct; 938 Indirect) +0.09%
- Criterion 7: No Issues
- Criterion 8: Potential Impact on Air Quality; new Source Review required due to new construction; Air Conformity Analysis required due to severe Nonattainment for Ozone. No State Implementation Plan growth allowance has been allocated. Major impact on Land Use; reports 0 unconstrained acres available for development.

✓ Strategy ✓ Capacity Analysis / Data Verification ✓ JCSG/MilDep Recommended ✓ De-conflicted w/JCSGs

✓ COBRA ✓ Military Value Analysis / Data Verification ✓ Criteria 6-8 Analysis ✓ De-conflicted w/MilDeps

E&T 0032

Senior level education will be provided by multiple colleges under the National Defense University. The colleges will report to the National Defense University chain of command and will combine all common support requirements. The Army will be the proponent for a Land Centric college. The Air Force will be the proponent for an Air Centric college. The Navy will be the proponent for a Maritime Centric college. The Marine Corps will be the proponent for an Expeditionary Centric College**. All of the colleges will teach a common Joint Professional Military Education curricula controlled by the Chairman of Joint Chiefs of Staff. Professional Military Education curricula will be controlled by the appropriate proponent Service Chief. Joint Forces Staff College will remain an independent source of Joint Professional Military Education Level II for Joint Specialty Officers.**

Scenario E&T 0032
Realign SLCs under NDU and Co-locate at Ft McNair
Criterion 5 - COBRA

2 February 2005

Scenario Description

- **Action 1: Re-locate Air War College to Ft. McNair**
- **Action 2: Re-locate Army War College to Ft. McNair**
- **Action 3: Re-locate College of Naval Warfare to Ft. McNair**
- **Action 4: Re-locate Marine Corps War College to Ft. McNair**
- **Action 5: Re-Align and Co-Locate the Air War College, Army War College, College of Naval Warfare and Marine Corps War College with the National War College at Ft. McNair.**

ROI Summary

Scenario	One-Time Costs	Steady-State Savings	ROI Years	20 Year NPV
E&T 0032 Ed. Judg. (Certified)	91.7 (85.1)	-34.6 (-11.06)	1 (2)	-408.2 (-123.3)

All Dollars shown in Millions

Notes: Key Elements of One-Time Costs:

1. MILCON $14.6M
2. Personnel $4.6M (Civilian RIF, Civilian Early Retirement, Eliminated Military PCS, Unemployment)
3. Overhead $5.6M (Program Management Costs, Shutdown Costs)
4. Moving $18.1M (Civilian PPP, Civilian Moving, Military Moving, Freight and IT Moving Costs)
5. Other $48.7 (HAP/RSE Costs and One-Time Costs)

Key Elements of Steady State Savings:

1. Personnel $25.4M *
2. Overhead $9.0M
3. Other $500,000

Disposition of Billets/Positions

Scenario		OFF	ENL	CIV	STU	TOT
E&T 0032 (Certified)	Eliminate	76 (43)	47 (54)	184 (167)		307 (264)
	Move	166 (163)	16 (16)	376 (257)	893 (893)	1,451 (1,329)

One-Time Costs Summary

Scenario	Const	Pers	Ovhd	Move	Other	Total Costs	Svgs	Net Costs
E&T 0032 Ed. Judg. (Certified)	14.7 (14.7)	4.6 (3.6)	5.6 (5.3)	18.1 (13.5)	48.7 (48.1)	91.7 (85.1)	50.7 (50.7)	41.0 (34.5)

All Dollars Shown in Millions

Notes:

1. MILCON $14.7M
2. Personnel Consists of $2.8M Civilian RIF, $558,000 Civilian Early Retirement, $984,000 Military PCS, $218,000 Unemployment.
3. Overhead Consists of $4.6M Program Management Costs and $955,000 Shutdown Costs.
4. Move Consists of $15.0M Civilian Moving Costs, $1.3M Civilian PPP, $628,000 Military Costs, $345,000 Freight Costs and $831,000 IT Moving Costs.
5. “Other” consists of $1.5M for HAP/RSE, $550,000 Environmental Mitigation costs at Ft. and $46.7M for Library Movement Costs and Utility Upgrade Costs at Ft. McNair
6. “Svgs” consists of $50M Avoided Construction at Carlisle Barracks, $702,000 Model Military Move Savings.

Moving

McNair

Derived

MILCON Summary

Scenario: E&T 0032 (Same for Both)	None			
Construction FAC Description	UM	New	Rehab	Cost
General Admin Building	**SF**	**85,000**		**14.6**
TOTAL				14.6

Note: All Dollars Shown in Millions

Recurring Costs/Savings Summary

Recurring Costs/Savings FY 06-FY11						
Scenario	O&M	Mil Pers	Other	Total Costs	Svgs	Net Costs
E&T 0032 Ed. Judg (Certified)	1.6 (37.3)	12.4 (32.4)	1.0 (1.0)	15.0 (70.7)	-154.4 (-123.4)	-139.4 (-61.6)

Notes: 1. "O&M" Consists of $2.9M Civilian Salary, $1.0M Sustainment/Recap Costs and $-2.3M TRICARE Savings

2. "Mil Pers" Consists $12.4M BAH Increase

3. "Other" Consists of $1.0M Mission Activity Costs (IT Costs and Subscription Costs for Navy CNW)

4. "Svgs" Consists of $14.6M Sustainment, $11.8M Recap, $12.9M BOS, $50.1M Civ Salary, $34.7 Officer Salary, $16.3M Enlisted Salary, $13.4M BAH Savings

Key Elements of Savings

Scenario: E&T 0032		
Element (* indicates recurring savings will occur to year 2025)	Description	Total Net Savings ($M) FY06-FY11
Sustainment*	Reduced Base Operations at Losing Installations	-14.2 (-14.6)
Recap*	Reduced Base Operations at Losing Installations	-11.1 (-11.8)
BOS*	Reduced Overhead	-12.9 (-10.8)
Civ Salary*	Eliminated 244 Billets (Eliminated 167 Billets)	-47.2 (-46.2)
Mil Salary*	Eliminated 108 Billets (Eliminated 97 Billets)	-51.1 (-38.2)
TRICARE*	Eliminated 352 Billets (Eliminated 264 Billets)	-2.3 (-2.3)

Scenario E&T 0032
Realign SLCs under NDU and Co-locate at Ft McNair

Criterion 6 – Community Infrastructure

2 February 2005

Scenario Description

- **Action 1: Re-locate Air War College to Ft. McNair**
- **Action 2: Re-locate Army War College to Ft. McNair**
- **Action 3: Re-locate College of Naval Warfare to Ft. McNair**
- **Action 4: Re-locate Marine Corps War College to Ft. McNair**
- **Action 5: Re-Align and Co-Locate the Air War College, Army War College, College of Naval Warfare and Marine Corps War College with the National War College at Ft. McNair.**

Back Up Slides

C6 – Employment Change

Base	Direct Loss/Gain	Indirect Loss/Gain	Total Loss/Gain	% of ROI Employment
Carlisle Barracks	-747	-552	-1299	-0.34
NAVSTA, Newport	-485	-637	-1122	-0.13
MCB Quantico	-26	-17	-43	-0.0
Maxwell AFB	-500	-351	-851	-0.41
Ft. McNair	1446	955	2401	0.09

C6 – Employment Change (Certified)

Base	Direct Loss/Gain	Indirect Loss/Gain	Total Loss/Gain	% of ROI Employment
Carlisle Barracks	-747	-552	-1299	-0.34
NAVSTA, Newport	-301	-369	-607	-0.08
MCB Quantico	-26	-17	-43	-0.0
Maxwell AFB	-427	-293	-720	-0.35
Ft. McNair	1443	959	2412	0.09

Back Up Slides

Scenario E&T 032
Realign and Co-locate Senior Level Colleges at Fort McNair, D.C.

Criterion 7 – Community Infrastructure

2 February 2005

Scenario Description

- **Action 1: Re-locate Air War College from Maxwell AFB, AL to Fort McNair, D.C.**
- **Action 2: Re-locate Army War College from Carlisle Barracks, PA to Fort McNair, D.C.**
- **Action 3: Re-locate College of Naval Warfare from NS Newport, RI to Fort McNair, D.C.**
- **Action 4: Re-locate Marine Corps War College from Quantico, VA to Fort McNair, D.C.**
- **Action 5: Realign and Co-locate the Air War College, Army War College, College of Naval Warfare and Marine Corps War College with the National War College at Ft. McNair.**

Back Up Slides

C7 Issues - Profiles

- **Issues identified in review of profiles:**
  - **Fort McNair, D.C.**
    - **None**
  - **Quantico, VA**
    - **None**
  - **NS Newport, RI**
    - **None**
  - **Carlisle Barracks, PA**
    - **None**
  - **Maxwell AFB, AL**
    - **None**

C7 Issues - Profiles

- **Issues identified in review of data calls:**
  - **Fort McNair, D.C.**
    - **None**
  - **Quantico, VA**
    - **None**
  - **NS Newport, RI**
    - **None**
  - **Carlisle Barracks, PA**
    - **None**
  - **Maxwell AFB, AL**
    - **None**

Scenario E&T 032
Realign and Co-locate Senior Level Colleges at Fort McNair, D.C.
Criterion 8 – Environmental Profile

2 February 2005

Scenario Description

- **Action 1: Re-locate Air War College from Maxwell AFB, AL to Fort McNair, D.C.**
- **Action 2: Re-locate Army War College from Carlisle Barracks, PA to Fort McNair, D.C.**
- **Action 3: Re-locate College of Naval Warfare from NS Newport, RI to Fort McNair, D.C.**
- **Action 4: Re-locate Marine Corps War College from MCB Quantico, VA to Fort McNair, D.C.**
- **Action 5: Realign and Co-locate the Air War College, Army War College, College of Naval Warfare and Marine Corps War College with the National War College at Ft. McNair.**

C8 Issues - Profiles

- Issues identified in review of profiles:
  - Fort McNair, D.C.
    - Air Quality: **Potential impact; new Source Review required due to new construction and Air Conformity Analysis required due to severe Nonattainment for Ozone (1,620 personnel + vehicles). No State Implementation Plan growth allowance has been allocated.**
    - Land Use Constraints: **Major impact; reports 0 unconstrained acres available for development out of 98 total acres. The installation has spent $1.3M thru FY03 for environmental restoration.**
    - Water Resources: **Likely no impact; however must consider need to purchase additional water services as population increases 81% from current population. Groundwater contamination is reported. The state requires permits for the withdrawal of groundwater.**
  - MCB Quantico, VA
    - **None**
  - NS Newport, RI
    - **None**
  - Carlisle Barracks, PA
    - **None**
  - Maxwell AFB, AL
    - **None**

Fort McNair – Installation Environmental Profile

- **Air Quality:** Is in Severe Nonattainment for Ozone (1 hr) for all Criteria Pollutants. It holds a CAA Major Operating Permit. No State Implementation Plan growth allowance has been allocated.
- **Cultural/Archeological/Tribal Resources:** **Historical property identified. It does not have sites with high archeological potential identified.**
- **Dredging:** **Has no impediments to dredging**.
- **Land Use Constraints/Sensitive Resource Areas:** Reports 0 unconstrained acres available for development out of 98 total acres. **Fort McNair does not have Explosive Safety Quantity Distance Arcs. It has restrictions due to adjacent or nearby Sensitive Resource Area.** The installation has spent $1.3M thru FY03 for environmental restoration.
- **Marine Mammal/Marine Resources/Marine Sanctuaries:** **Is not impacted by laws and regulations pertaining to Marine Mammal Protection Act, Essential Fish Habitats & Fisheries and Marine Sanctuaries, which may adversely restrict navigation and operations.**

Fort McNair – Installation Environmental Profile

- **Noise:** **Does not have noise contours that extend off the installation's property.**
- **Threatened and Endangered Species/Critical Habitat:** **Federally-listed TES are not present, candidate species are not present; and critical habitat is not present. The installation does not have a Biological Opinion.**
- **Waste Management:** **Does not have a permitted Resource Conservation and Recovery Act (RCRA) Treatment Storage and Disposal Facility; does not have an interim or final RCRA Part X facility; does not have an on-base solid waste disposal facility.**
- **Water Resources:** **Does not discharge to an impaired waterway.** Groundwater contamination is reported. **Surface water contamination is not reported.** The state requires permits for the withdrawal of groundwater.
- **Wetlands:** **Reports no wetland restricted acres on the main installation, and no wetland restricted acres on ranges.**

MCB Quantico, VA – Installation Environmental Profile

- **Air Quality:** MCB Quantico is in Severe Nonattainment for Ozone (1hr). It holds a CAA Major Operating Permit. No emission credit program available. No SIP growth allowance has been allocated and the installation is in an area projected or proposed to be designated nonattainment for the 8-hour Ozone or the PM2.5 NAAQS.
- **Cultural/Archeological/Tribal Resources:** Historical property has been identified. There is no programmatic agreement for historic property in place with the SHPO. It does have sites with high archeological potential identified, which do not restrict current construction and do not restrict current operations.
- **Dredging:** Has no dredging requirement.
- **Land Use Constraints/Sensitive Resource Areas:** MCB Quantico reports 17,109 unconstrained acres available for development out of 59,253 total acres. They have spent $4.8M thru FY03 for environmental restoration, and has estimated the remaining Cost to Complete at $29M. It has Military Munitions Response Areas that it reports constraints associated with, and has restrictions due to adjacent or nearby Sensitive Resource Areas. It has Explosive Safety Quantity Distance Arcs, some of which require safety waivers, and some with the potential for expansion. It reports being constrained by the laws, regulations, policies or activities of non-DoD federal, tribal, state, or local agencies. Their missions have been limited by existing or proposed activities of other military departments or federal, tribal, state, or local agencies.
- **Marine Mammal/Marine Resources/Marine Sanctuaries:** Is not impacted by laws and regulations pertaining to Marine Mammal Protection Act, Essential Fish Habitats & Fisheries and Marine Sanctuaries, which may adversely restrict navigation and operations.

MCB Quantico, VA – Installation Environmental Profile

- **Noise:** **Does have noise contours that extend off the installation's property. Of the 518 acres that extend to off-base property, 518 acres have incompatible land uses. It has published noise abatement procedures for the main installation. It has published noise abatement procedures for the training and/or RDT&E range.**
- **Threatened and Endangered Species/Critical Habitat:** **MCB Quantico reported that federally-listed TES are present, candidate species are not present, critical habitat is not present, and that they do not have a Biological Opinion.**
- **Waste Management:** **Does not have a permitted Resource Conservation and Recovery Act (RCRA) Treatment Storage and Disposal Facility. They do not have an interim or final RCRA Part X facility. They do not have an on-base solid waste disposal facility.**
- **Water Resources:** **MCB Quantico discharges to an impaired waterway. Groundwater contamination is reported. Surface water contamination is not reported.**
- **Wetlands:** **Has 6.5% wetland restricted acres on the military installation.**

NS Newport, RI – Installation Environmental Profile

- **Air Quality:** Naval Station Newport is not in Attainment for all Criteria Pollutants. It is in Serious Nonattainment for Ozone (1hr). It holds a CAA Major Operating Permit. No emission credit program available. No SIP growth allowance has been allocated and is in an area projected or proposed to be designated nonattainment for the PM2.5 NAAQS.
- **Cultural/Archeological/Tribal Resources:** Historical property has been identified. There is no programmatic agreement for historic property in place with the SHPO. It does have sites with high archeological potential identified which do not restrict current construction and do not restrict current operations. It does have potential archeological restrictions to future construction.
- **Dredging:** Has no dredging requirement.
- **Land Use Constraints/Sensitive Resource Areas:** Naval Station Newport reports 181 unconstrained acres available for development out of 737 total acres. They have spent $77.1M thru FY03 for environmental restoration, and has estimated the remaining Cost to Complete at $41M. It has Explosive Safety Quantity Distance Arcs, none of which require safety waivers, and none with the potential for expansion.
- **Marine Mammal/Marine Resources/Marine: Sanctuaries:** Is not impacted by laws and regulations pertaining to Marine Mammal Protection Act, Essential Fish Habitats & Fisheries and Marine Sanctuaries, which may adversely restrict navigation and operations.

NS Newport, RI – Installation Environmental Profile

- **Noise:** **Does not have noise contours that extend off the installation's property. It does not have published noise abatement procedures for the main installation.**
- **Threatened and Endangered Species/Critical Habitat:** **Naval Station Newport reported that federally-listed TES are not present, candidate species are not present, critical habitat is not present, and that they do not have a Biological Opinion.**
- **Waste Management:** **Does not have a permitted Resource Conservation and Recovery Act (RCRA) Treatment Storage and Disposal Facility; does not have an interim or final RCRA Part X facility; does not have an on-base solid waste disposal facility.**
- **Water Resources:** **Naval Station Newport discharges to an impaired waterway. Groundwater contamination is reported. Surface water contamination is not reported. The state requires permits for the withdrawal of groundwater. They reported restrictions or controls that limited the production or distribution of potable water. Exceedances of drinking water standards are reported, during at least one of the last three reporting periods.**
- **Wetlands:** **Has 1.8% wetland restricted acres on the military installation.**

Carlisle Barracks, PA – Installation Environmental Profile

- **Air Quality:** Is in Marginal Nonattainment for Ozone (1 hr). It holds a CAA Synthetic Minor Operating Permit. No SIP growth allowance has been allocated. Carlisle Barracks is in an area projected or proposed to be designated Nonattainment for the 8-hour Ozone or the PM2.5 NAAQS.
- **Cultural/Archeological/Tribal Resources:** Historical property has been identified. It does have sites with high archeological potential identified, which restrict construction and do not restrict operations. There is a programmatic agreement for historic property in place with the State Historic Preservation Office. Formal consultation with Native Tribes has occurred within the past two years.
- **Dredging:** There are no impediments to dredging.
- **Land Use Constraints/Sensitive Resource Areas:** Reports 458 unconstrained acres available for development out of 458 total acres. Carlisle Barracks does not have Explosive Safety Quantity Distance Arcs.
- **Marine Mammal/Marine Resources/Marine Sanctuaries:** Is not impacted by laws and regulations pertaining to Marine Mammal Protection Act, Essential Fish Habitats & Fisheries and Marine Sanctuaries, which may adversely restrict navigation and operations.

Carlisle Barracks, PA – Installation Environmental Profile

- **Noise:** **Does not have noise contours that extend off the installation's property.**
- **Threatened and Endangered Species/Critical Habitat:** **Has federally-listed TES are not present, candidate species are not present, critical habitat is not present, and the installation does not have a Biological Opinion.**
- **Waste Management:** **Does not have a permitted Resource Conservation and Recovery Act (RCRA) Treatment Storage and Disposal Facility; does not have an interim or final RCRA Part X facility; does not have an on-base solid waste disposal facility.**
- **Water Resources:** **Does not discharge to an impaired waterway. Groundwater contamination is not reported. The installation reported restrictions or controls that limited production or distribution of potable water.**
- **Wetlands:** **Reports 1.3% wetland restricted acres on the main installation, and no wetland restricted acres on ranges.**

Maxwell AFB, AL – Installation Environmental Profile

- **Air Quality:** **Maxwell AFB is in Attainment for all Criteria Pollutants. It did not report holding an CAA Operating Permit.**
- **Cultural/Archeological/Tribal Resources:** **Historical property has been identified. There is no programmatic agreement for historic property in place with the SHPO. It does not have sites with high archeological potential identified.**
- **Dredging:** **Has no impediments to dredging.**
- **Land Use Constraints/Sensitive Resource Areas:** **Maxwell AFB reports 264 unconstrained acres available for development out of 4223 total acres. They have spent $19.1M thru FY03 for environmental restoration, and has estimated the remaining Cost to Complete at $8M. It has restrictions due to adjacent or nearby Sensitive Resource Area and has Explosive Safety Quantity Distance Arcs, none of which require safety waivers, and some with the potential for expansion.**
- **Marine Mammal/Marine Resources/Marine: Sanctuaries:** **Is impacted by laws and regulations pertaining to Marine Mammal Protection Act, Essential Fish Habitats & Fisheries and Marine Sanctuaries, which may adversely restrict navigation and operations.**

Maxwell AFB, AL – Installation Environmental Profile

- **Noise:** **Has noise contours that extend off the installation's property. Of the 324 acres that extend to off-base property, 22 acres have incompatible land uses. It has published noise abatement procedures for the main installation.**
- **Threatened and Endangered Species/Critical Habitat:** **Maxwell AFB reported that federally-listed TES are not present, candidate species are not present, critical habitat is not present, and that they do not have a Biological Opinion.**
- **Waste Management:** **Does not have a permitted Resource Conservation and Recovery Act (RCRA) Treatment Storage and Disposal Facility; does not have an interim or final RCRA Part X facility; does not have an on-base solid waste disposal facility.**
- **Water Resources:** **Maxwell AFB does discharge to an impaired waterway. Groundwater contamination is reported. Surface water contamination is not reported..**
- **Wetlands:** **Has no wetland restricted acres on the military installation.**

Issue 1:Certified Data vs. Educational Judgment

	Army	Navy	Air Force	USMC
Students	340	272	265	16
Faculty	97	78	77	5
Total Student and Faculty	437	350	342	21
Admin	127	56 (124)	42 (124)	5
Ratio	3.4 / 1	6.25 / 1 (2.8 / 1)	8.1 / 1 (2.7 / 1)	4.2 / 1

Issue 1:Certified Data vs. Educational Judgment

- Disparity concerning current administrative personnel and faculty at service schools
- Disparity significantly affects determination of personnel savings or additional costs

	Certified data		Educational Judgment	
	Faculty	Admin	Faculty	Admin
Army	**97**	**127**	**97**	**127**
Navy	78 (75 +) = 3	42(23 +) = 19	78	124
Air Force	**76**	56	**76**	124
Marine Corps	**5**	**5**	**5**	**5**

Issue 1: Impact

- Personnel cost savings dependant on current number of personnel at Senior Service Colleges

	Certified Data	Educational Judgment
0032: Realign and co-locate at Ft McNair	**Creates 174** Administrative Billets	**Eliminates 83** Administrative Billets
0026: Consolidate at Ft McNair	**Creates 156** Administrative Billets	**Eliminates 97** Administrative Billets

COA 1: Use Educational Judgment

COA 2: Direct USAF / USN to provide fair share of AU /NWC administrative personnel

COA 3: Use Certified Data

Issue 2: Incomplete BOS Data

- Significant differences in service input
- Lack of BOS increases at gaining installations

	As a Losing Base	As a Gaining Base
Carlisle Barracks	185 Billets	N/A
Fort McNair	166 Billets	0 Billets
Maxwell AFB	30 Billets	N/A
MCB Quantico	3 Billets	0 Billets
Fort Eustis	N/A	0 Billets
Naval Station Newport	6 Billets	N/A

Issue 2: Impact

- Excess Cost savings
- Results in Disproportionate Cost Estimates between scenarios moving all schools to Ft McNair and scenarios moving all schools to MCB Quantico or Ft Eustis

	With BOS	Without BOS
0032: Realign and co-locate at Ft McNair	**Payback:** 1 Year **NPV:** -408.2M **Steady State Savings:** -34.6M	**Payback:** 2 Years **NPV:** -192.3M **Steady State Savings:** -17.8M
0033: Realign and co-locate at SLCs MCB Quantico	**Payback:** 2 Years **NPV:** -416.1M **Steady State Savings:** -41.2M	**Payback:** 12 Years **NPV:** -31.8 **Steady State Savings:** -11.0M

Recommendation: Accept consistency of relationships between scenarios based on cost analysis with BOS data eliminated

Issue 3: MILVAL Scores

	MCB Quantico	Ft McNair
Attribute 1: Location	16.6	20.0
Attribute 2: Ed Output	14.5	9.9
Attribute 3: Facilities	9.1	4.3
Attribute 4: Staff	13.8	11.6
Attribute 5: QOL	8.8	4.3
Total Score	62.8	50.1

- MILVAL scoring plan does not effectively address the required decision
  - **Attribute 1:** No issues
  - **Attribute 2:** Will be the same for all scenarios (current scores do not impact choice)
  - **Attribute 3:** Current score does not include Lincoln Hall

    Buildable Acres
  - **Attribute 4:** Will be the same for all scenarios (current score do not impact choice)
  - **Attribute 5:** McNair gets 0 points for Dental Facility, Medical Facility, and child care because these services are provided at locations other than Ft McNair

    Student Billeting facilities not applicable to Senior Service Colleges

Recommendation: Understand quality of extant MILVAL scores

Candidate E&T 0032

Candidate Recommendation: Realign Carlisle Barracks, PA; Maxwell Air Force Base, AL; Naval Station Newport, RI; and Marine Corp Base Quantico by moving the United States Army War College, Air War College, College of Naval Warfare, and Marine Corps War College to Fort McNair, Washington D.C. and realigning under the National Defense University.

Justification

- ✓ **Maximize professional development, administrative, and academic synergies by combining similar education programs under one administration**
- ✓ **Merges common support functions and reduces resource requirements.**
- ✓ **NCR - Strategic Center of Excellence**

Military Value

✓ MCB Quantico	62.8	
✓ Ft. Leavenworth	59.8	
✓ Maxwell AFB	54.1	
✓ Carlisle Barracks		53.8
✓ NAVSTA Newport		52.7
✓ Ft. McNair	50.1	
✓ Ft. Eustis		23.2

Payback

▪ One-time cost:	$91.7M
▪ Net implementation savings:	$-139.4M
▪ Annual recurring savings:	$-34.6M
▪ Payback time:	1 Year
▪ NPV (savings):	$-408.2M

Impacts

- **Criterion 6:**
  - Newport -1122 (485 Direct; 737 Indirect) -0.13%
  - Montgomery -851 (500 Direct;351 Indirect) -0.41%
  - Harrisburg -1299 (747 Direct; 552 Indirect) -0.34%
  - DC-VA-MD +2368 (1420 Direct; 938 Indirect) +0.09%
- **Criterion 7: No Issues**
- **Criterion 8:** Potential Impact on Air Quality; new Source Review required due to new construction; Air Conformity Analysis required due to severe Nonattainment for Ozone. No State Implementation Plan growth allowance has been allocated. Major impact on Land Use; reports 0 unconstrained acres available for development.

✓ Strategy ✓ Capacity Analysis / Data Verification ✓ JCSG/MilDep Recommended ✓ De-conflicted w/JCSGs

✓ COBRA ✓ Military Value Analysis / Data Verification ✓ Criteria 6-8 Analysis ✓ De-conflicted w/MilDeps

Scenario Recommendations

Forward Three Courses of Action to ISG

1. **Joint Centric Scenario**

   - Scenario 0032: Realign and Co-locate SLCs at Ft McNair

2. **Service Centric**

   - Scenario 0058: Realign USAWC with USACGSG and Co-locate at Ft Leavenworth

3. **Modified Status Quo**

   - Scenario 0058: Realign USAWC with USACGSG and Co-locate at Ft Leavenworth

   - Scenario 0025: Realign SSCs in Place

Candidate E&T 0058

Candidate Recommendation: Realign US Army War College With US Army Command and General Staff College and Co-locate at Ft. Leavenworth

Justification

- ✓ **Consolidates Officer Strategic and Operational Education.**
- ✓ **Promotes Training Effectiveness and Functional Efficiencies**
- ✓ **Closes Carlisle Barracks.**
- ✓ **Army Supported**

Military Value

✓ **Ft. Leavenworth**	**59.8**
✓ **Carlisle Barracks**	**53.8**

Payback

✓**Criterion 5 (COBRA) results:**

✓**One-Time Cost:**	**$69.9M**
✓**Net Implementation Savings**	**$-115.8M**
✓**Annual Recurring Savings**	**$-48.4M**
✓**Payback Period**	**1 Year**
✓**NPV (Savings)**	**$-554.0M**

Impacts

- ✓ **Criterion 6:**
  Harrisburg-Carlisle, PA MSA: -2429 (1394 Direct; 1035 Indirect) -0.34%
  Kansas City, MO-MSA +1429 (826 Direct; 603 Indirect) +0.12%
- ✓ **Criterion 7: No Issues**
- ✓ **Criterion 8: No Issues**

✓ Strategy ✓ Capacity Analysis / Data Verification ✓ JCSG/MilDep Recommended ✓ De-conflicted w/JCSGs

✓ COBRA ✓ Military Value Analysis / Data Verification ✓ Criteria 6-8 Analysis ✓ De-conflicted w/MilDeps

Scenario E&T 0058
Realign US Army War College With US Army Command and General Staff College and Co-locate at Ft. Leavenworth
Criterion 5 - COBRA

2 February 2005

Scenario Description

- Action 1: Re-locate US Army War College from Carlisle Barracks, PA to Fort Leavenworth, KS.
- Action 2: Realign US Army War College with US Army Command and General Staff College and Co-locate at Fort Leavenworth, KS.

ROI Summary

Scenario	One-Time Costs	Steady-State Savings	ROI Years	20 Year NPV
E&T 0058	69.9	-48.4	1	-554.0

All Dollars shown in Millions

Notes: Key Elements of One-Time Costs:

1. MILCON $36.6M
2. Personnel $5.9M (Civilian RIF, Civilian Early Retirement, Eliminated Military PCS, Unemployment)
3. Overhead $7.7M (Program Management Costs, Shutdown Costs)
4. Moving $14.9M (Civilian PPP, Civilian Moving, Military Moving, Freight and IT Moving Costs)
5. Other $4.7 (HAP/RSE Costs and One-Time Costs)

Key Elements of Steady State Savings:

1. Personnel $45.6M
2. Overhead $12.6M

Disposition of Billets/Positions

Scenario		OFF	ENL	CIV	STU	TOT
E&T 0058	Eliminate	167	88	230		485
	Move	129	158	341	508	1,136

One-Time Costs Summary

Scenario	Const	Pers	Ovhd	Move	Other	Total Costs	Svgs	Net Costs
E&T 0058	36.6	5.9	7.7	14.8	4.7	69.9	0.8	69.1

All Dollars Shown in Millions

Notes:

1. MILCON $36.6M
2. Personnel Consists of $3.0M Civilian RIF, $539,000 Civilian Early Retirement, $2.1M Military PCS, $235,500 Unemployment.
3. Overhead Consists of $7.4M Program Management Costs and $363,000 Shutdown Costs.
4. Move Consists of $10.2M Civilian Moving Costs, $1.6M Civilian PPP, $1.3M Military Costs, $444,000 Freight Costs and $1.2M IT Moving Costs.
5. “Other” consists of $4.7M for Library Movement Costs
6. “Svgs” consists of $792,000 Model Derived Military Move Savings.

Moving

MILCON Summary

Scenario: E&T 0058				
Construction FAC Description	UM	New	Rehab	Cost
General Admin Building	**SF**	**34,000**		**17.6**
General Instruction Building	**SF**	**89,000**		**6.0**
Vehicle Parking, Surfaced	**SY**	**50,000**		**2.9**
Vehicle Parking, Surfaced (2nd Location)	**SY**	**165,000**		**9.6**
TOTAL				36.6

Note: All Dollars Shown in Millions

Recurring Costs/Savings Summary

Recurring Costs/Savings FY 06-FY11						
Scenario	O&M	Mil Pers	Other	Total Costs	Svgs	Net Costs
E&T 0058	51.3	2.1	0.0	53.4	-238.3	-184.9

Notes: 1. "O&M" Consists of $5.6M BOS Costs, $575,000 Civilian Salary, $4.0M Sustainment/Recap
Costs and 40.9M TRICARE Costs

2. "Mil Pers" Consists of $2.18M BAH Increase

3. "Svgs" Consists of $10.9M Sustainment, $13.3M Recap, $38.0M BOS, $56.6M Civ Salary,
$77.3 Officer Salary, $26.9M Enlisted Salary, $12.20M BAH Savings

Key Elements of Savings

Scenario: E&T 0058		
Element (* indicates recurring savings will occur to year 2025)	Description	Total Net Savings ($M) FY06-FY11
Sustainment*	Reduced Base Operations at Losing Installations	-8.5
Recap*	Reduced Base Operations at Losing Installations	-11.5
BOS*	Reduced Overhead	-32.4
Civ Salary*	Eliminated 230 Billets	-56.1
Mil Salary*	Eliminated 255 Billets	-104.1

Scenario E&T 0058
Realign US Army War College With US Army Command and General Staff College and Co-locate at Ft. Leavenworth

Criterion 6 – Community Infrastructure

2 February 2005

Scenario Description

- Action 1: Re-locate US Army War College from Carlisle Barracks, PA to Fort Leavenworth, KS.
- Action 2: Realign US Army War College with US Army Command and General Staff College and Co-locate at Fort Leavenworth, KS.

Back Up Slides

C6 – Employment Change

Base	Direct Loss/Gain	Indirect Loss/Gain	Total Loss/Gain	% of ROI Employment
Carlisle Barracks	-1394	-1035	-2429	-0.63
Ft. Leavenworth	-826	-603	-1429	-0.12

Scenario E&T 058
Realign US Army War College with US Army Command and General Staff College and Co-locate at Fort Leavenworth, KS

Criterion 7 – Community Infrastructure

2 February 2005

Scenario Description

- Action 1: Re-locate US Army War College from Carlisle Barracks, PA to Fort Leavenworth, KS.
- Action 2: Realign US Army War College with US Army Command and General Staff College and Co-locate at Fort Leavenworth, KS.

Back Up Slides

C7 Issues - Profiles

- **Issues identified in review of profiles:**
  - **Carlisle Barracks, PA**
    - **None**
  - **Fort Leavenworth, KS**
    - **None**

C7 Issues - Profiles

- **Issues identified in review of data calls:**
  - **Carlisle Barracks, PA**
    - **None**
  - **Fort Leavenworth, KS**
    - **None**

Scenario E&T 058
Realign US Army War College with US Army Command and General Staff College and Co-locate at Fort Leavenworth, KS

Criterion 8 – Environmental Profile

2 February 2005

Scenario Description

- Action 1: Re-locate US Army War College from Carlisle Barracks, PA to Fort Leavenworth, KS.
- Action 2: Realign US Army War College with US Army Command and General Staff College and Co-locate at Fort Leavenworth, KS.

C8 Issues - Profiles

- **Issues identified in review of profiles:**
  - **Carlisle Barracks, PA**
    - **None**
  - **Fort Leavenworth, KS**
    - **None**

Carlisle Barracks, PA – Installation Environmental Profile

- **Air Quality:** Is in Marginal Nonattainment for Ozone (1 hr). It holds a CAA Synthetic Minor Operating Permit. No SIP growth allowance has been allocated. Carlisle Barracks is in an area projected or proposed to be designated Nonattainment for the 8-hour Ozone or the PM2.5 NAAQS.
- **Cultural/Archeological/Tribal Resources:** Historical property has been identified. It does have sites with high archeological potential identified, which restrict construction and do not restrict operations. There is a programmatic agreement for historic property in place with the State Historic Preservation Office. Formal consultation with Native Tribes has occurred within the past two years.
- **Dredging:** There are no impediments to dredging.
- **Land Use Constraints/Sensitive Resource Areas:** Reports 458 unconstrained acres available for development out of 458 total acres. Carlisle Barracks does not have Explosive Safety Quantity Distance Arcs.
- **Marine Mammal/Marine Resources/Marine Sanctuaries:** Is not impacted by laws and regulations pertaining to Marine Mammal Protection Act, Essential Fish Habitats & Fisheries and Marine Sanctuaries, which may adversely restrict navigation and operations.

Carlisle Barracks, PA – Installation Environmental Profile

- **Noise:** **Does not have noise contours that extend off the installation's property.**
- **Threatened and Endangered Species/Critical Habitat:** **Has federally-listed TES are not present, candidate species are not present, critical habitat is not present, and the installation does not have a Biological Opinion.**
- **Waste Management:** **Does not have a permitted Resource Conservation and Recovery Act (RCRA) Treatment Storage and Disposal Facility; does not have an interim or final RCRA Part X facility; does not have an on-base solid waste disposal facility.**
- **Water Resources:** **Does not discharge to an impaired waterway. Groundwater contamination is not reported. The installation reported restrictions or controls that limited production or distribution of potable water.**
- **Wetlands:** **Reports 1.3% wetland restricted acres on the main installation, and no wetland restricted acres on ranges.**

Fort Leavenworth, KS – Installation Environmental Profile

- **Air Quality:** **The installation is in Nonattainment for CO. It holds a CAA Synthetic Minor Operating Permits. No SIP growth allowance has been allocated.**
- **Cultural/Archeological/Tribal Resources:** **Historical property has been identified. It does have sites with high archeological potential identified, which do not restrict construction or operations. Contact with Native Tribes has occurred within the past two years.**
- **Dredging:** **Has no impediments to dredging.**
- **Land Use Constraints/Sensitive Resource Areas:** **Reports 300 unconstrained acres available for development out of 5637 total acres. Fort Leavenworth has Explosive Safety Quantity Distance Arcs, some of which require safety waivers, and none with the potential for expansion. It has Military Munitions Response Areas. The installation has spent $17.0M thru FY03 for environmental restoration, and estimates the remaining Cost to Complete at $12.0M.**
- **Marine Mammal/Marine Resources/Marine Sanctuaries:** **Is not impacted by laws and regulations pertaining to Marine Mammal Protection Act, Essential Fish Habitats & Fisheries and Marine Sanctuaries, which may adversely restrict navigation and operations.**

Fort Leavenworth, KS – Installation Environmental Profile

- **Noise:** **Does not have noise contours that extend off the installation's property.**
- **Threatened and Endangered Species/Critical Habitat:** **Federally-listed TES are present, candidate species are not present; and critical habitat is not present. The installation does not have a Biological Opinion.**
- **Waste Management:** **Does not have a permitted Resource Conservation and Recovery Act (RCRA) Treatment Storage and Disposal Facility; does not have an interim or final RCRA Part X facility; the installation does have an on-base solid waste disposal facility that is 20% filled.**
- **Water Resources:** **Fort Leavenworth does not discharge to an impaired waterway. Groundwater contamination is reported. Surface water contamination is not reported. The state requires permits for the withdrawal of groundwater.**
- **Wetlands:** **Reports no wetland restricted acres on the main installation, and no wetland restricted acres on ranges.**

Candidate E&T 0058

Candidate Recommendation: Realign US Army War College With US Army Command and General Staff College and Co-locate at Ft. Leavenworth

Justification

- ✓ **Consolidates Officer Strategic and Operational Education.**
- ✓ **Promotes Training Effectiveness and Functional Efficiencies**
- ✓ **Closes Carlisle Barracks.**
- ✓ **Army Supported**

Military Value

✓ **Ft. Leavenworth**	**59.8**
✓ **Carlisle Barracks**	**53.8**

Payback

✓**Criterion 5 (COBRA) results:**

✓**One-Time Cost:**	**$69.9M**
✓**Net Implementation Savings**	**$-115.8M**
✓**Annual Recurring Savings**	**$-48.4M**
✓**Payback Period**	**1 Year**
✓**NPV (Savings)**	**$-554.0M**

Impacts

- ✓ **Criterion 6:**
  Harrisburg-Carlisle, PA MSA: -2429 (1394 Direct; 1035 Indirect) -0.34%
  Kansas City, MO-MSA +1429 (826 Direct; 603 Indirect) +0.12%
- ✓ **Criterion 7: No Issues**
- ✓ **Criterion 8: No Issues**

✓ Strategy ✓ Capacity Analysis / Data Verification ✓ JCSG/MilDep Recommended ✓ De-conflicted w/JCSGs

✓ COBRA ✓ Military Value Analysis / Data Verification ✓ Criteria 6-8 Analysis ✓ De-conflicted w/MilDeps

Candidate # E&T 0041

Candidate Recommendation: Realign NAS Oceana, VA (NAVSTA Dam Neck Annex) by consolidating Navy and Marine Corps Intelligence Training. Realign NAS Pensacola, FL (Corry Station) by relocating Cryptology School and Center to NAS Oceana, VA (Dam Neck Annex). Provide by disestablishing all Cryptology training at NAS Pensacola, FL (Corry Station). The intent of this scenario is to consolidate like courses while maintaining service unique capabilities.

Justification

- ✓ Uses Inter-service Training Review Organization as the baseline
- ✓ Eliminates redundancy and cost
- ✓ Train as we fight "jointly"

Military Value

✓ Military Value:

	Initial Skills	Skills Progression	Functional
Dam Neck:	35.20	35.90	37.76
NAS Pensacola:	59.05	45.52	39.25

Payback

✓ One-time cost:	$205.388
✓ MILCON:	$193.780
✓ NPV	$219.257
✓ Payback Yrs/Break Even Yr:	Never/Never
✓ Steady State	$1.435
✓ Mil/Civ Reductions:	11/10
✓ Mil/Civ/Stu Relocated:	692/70/779

Impacts

- ✓ Criterion 6: No Issues
- ✓ Criterion 7: No Issues
- ✓ Criterion 8: Dam Neck impacted by laws and regulations for Marine Mammal Protection Act, has noise contours and discharges water to an impaired waterway.

All Dollars Shown in Millions

☑ Strategy ☑ Capacity Analysis / Data Verification ☐ JCSG/MilDep Recommended ☑ De-conflicted w/JCSGs

☑ COBRA ☑ Military Value Analysis / Data Verification ☑ Criteria 6-8 Analysis ☑ De-conflicted w/MilDeps

Alternate to Candidate #DON-0033

Option to Candidate Recommendation: Close SUBASE New London, CT, move SSNs to Norfolk and Kings Bay. This option would relocate the Naval Submarine School and Center for Submarine Learning to Newport, RI vice Kings Bay, GA.

Justification

✓Reduces Excess Capacity (at Newport RI)
✓Saves $$ by closing entire installation
✓Moves Navy only school to different Navy installation.
✓Intent would be to keep JCSG appraised of developments.

Military Value

✓Current Candidate Recommendation moves school house functions to Kings Bay, GA.
✓This option co-locates with an established Navy center for learning.
✓ Specifically co-locates with Surface Warfare Officers School, Command Leadership School, Senior Enlisted Academy and Naval War College.

Payback

✓One Time Cost:	UNK
✓Net Implementation Cost:	UNK
✓Annual Recurring Savings:	UNK
✓Payback Period:	UNK
✓ NPV savings:	UNK

Impacts

✓ Unknown at this time but not expected to be significant.

✓Strategy
COBRA

✓Military Capacity Analysis/Data Verification
Value Analysis/Data Verification

JCSG/MilDep Recommended
Criteria 6-8 Analysis

De-conflicted w/JCSGs
✓De-conflicted w/MilDeps

Change to Scenario #E&T-0004

Option: Close Navy Supply Corps School Athens GA Base. This considers the Navy portion of E&T-0004 to close the Athens, GA fenceline. E&T-0004 deactivated, but DON desires to move Navy Supply School to permit closing a single function installation.

Justification

✓Reduces Excess Capacity
✓Saves $$ by closing entire installation. No other activity on base – single function site
✓Moves Navy school to different Navy installation.
✓Intent would be to keep JCSG appraised of developments.

Military Value

✓Explores moving school house functions to Newport, RI.
✓ Center for Service Support would also relocate to a Navy location to be determined.
✓This option co-locates with an established Navy center for learning and Officer Professional Development.

Payback

✓One Time Cost:	UNK
✓Net Implementation Cost:	UNK
✓Annual Recurring Savings:	UNK
✓Payback Period:	UNK
✓ NPV savings:	UNK

Impacts

✓ Unknown at this time but not expected to be significant.

✓Strategy
COBRA

✓Military Capacity Analysis/Data Verification
Value Analysis/Data Verification

JCSG/MilDep Recommended
Criteria 6-8 Analysis

De-conflicted w/JCSGs
✓De-conflicted w/MilDeps

Change to Candidate #E&T-0003

Option: Disestablish and privatize DoD Graduate Education programs. Move unique NPS programs to Newport, RI.

Justification

✓Reduces Excess Capacity
✓Saves $$ by closing entire installation.
✓Maintains eight unique degree programs to Newport, with approximate of enrollment of 175 students.
✓Intent would be to keep JCSG appraised of developments.

Military Value

✓ Explores moving sub-set of current curricula to Newport to retain unique programs.
✓This option co-locates with an established Navy center for learning.
✓ Specifically co-locates with Naval War College.

Payback

✓One Time Cost: UNK
✓Net Implementation Cost: UNK
✓Annual Recurring Savings: UNK
✓Payback Period: UNK
✓ NPV savings: UNK

Impacts

✓ Unknown at this time.

✓Strategy
COBRA

✓Military Capacity Analysis/Data Verification
Value Analysis/Data Verification

JCSG/MilDep Recommended
Criteria 6-8 Analysis

De-conflicted w/JCSGs
✓De-conflicted w/MilDeps

Scenario #E&T-XXXX

Proposal: JCSG consider establishing a Joint Survival, Evasion, Resistance and Escape School.

Justification	Military Value
✓Navy scenarios require movement of some Naval SERE capability. ✓Saves $$ by supporting closure of entire installation (NAS Brunswick). ✓ Operations and recovery are Joint efforts, SERE training should have a similar approach.	✓ Provides appropriate Joint Survival, Evasion, Resistance and Escape training. ✓ May be in addition to service unique efforts, if required.
Payback	**Impacts**
✓One Time Cost: UNK ✓Net Implementation Cost: UNK ✓Annual Recurring Savings: UNK ✓Payback Period: UNK ✓ NPV savings: UNK	✓ Unknown at this time.

✓Strategy
COBRA

✓Military Capacity Analysis/Data Verification
Value Analysis/Data Verification

JCSG/MilDep Recommended
Criteria 6-8 Analysis

De-conflicted w/JCSGs
✓De-conflicted w/MilDeps

DEPARTMENT OF THE NAVY
OFFICE OF THE SECRETARY
1000 NAVY PENTAGON
WASHINGTON, DC 20350-1000

01 February 2005

MEMORANDUM FOR CHAIRMAN, EDUCATION & TRAINING JOINT CROSS SERVICE GROUP

Subj: SCENARIO PROPOSAL CONSIDERATION FOR JOINT SURVIVAL, EVASION, RESISTANCE, AND ESCAPE SCHOOL

The Department of the Navy requests you consider a new scenario to establish a joint Survival, Evasion, Resistance, and Escape (SERE) training center. The DON has registered a Candidate Recommendation to close Naval Air Station Brunswick, ME, which will require the relocation of the Navy SERE School.

Our analysis has reviewed the feasibility of relocating the SERE School to another DON installation. Our review has indicated a requirement to build some new facilities to support the operation. In an effort to optimize our analysis, we have also conducted initial liaison with the Air Force BRAC office to study the possibility of a joint solution. A joint solution would be in keeping with guidance from the Secretary of Defense and provide us with an opportunity to find the most cost effective option. This scenario, in combination with the DON closure action, will result in significant savings along with increased joint synergies.

Should you have additional questions, please contact Commander Carl Deputy for installation operation issues at 703-602-6490 or Commander Greg Hilscher at 703-602-6433 for education and training issues.

Anne Rathmell Davis
Special Assistant to the Secretary of the Navy
for Base Realignment and Closure

cc: OSD BRAC Office
E&T JCSG Principals
USAF BRAC Office

DRAFT DELIBERATIVE DOCUMENT - FOR DISCUSSION PURPOSES ONLY - DO NOT RELEASE UNDER FOIA

ATTACHMENT (3)

DEPARTMENT OF THE NAVY
OFFICE OF THE SECRETARY
1000 NAVY PENTAGON
WASHINGTON, DC 20350-1000

01 February 2005

MEMORANDUM FOR CHAIRMAN, EDUCATION & TRAINING JOINT CROSS SERVICE GROUP

Subj: SCENARIO PROPOSAL CONSIDERATION FOR NAVAL POSTGRADUATE SCHOOL

The Department of the Navy requests you consider an amendment to Candidate Recommendation E&T-0003, Privatize DOD Graduate Education. This amendment to the subject scenario would realign the military specific graduate degree programs/courses of instruction from Naval Postgraduate School to Naval Station Newport, RI.

Based on our assessment, there are eight technical graduate education programs/courses of instruction at the Naval Post Graduate School that have unique curriculum and should continue to be provided by the Department of Navy. The programs collectively have a current Navy enrollment of 162 personnel, other U.S. military enrollment of 88, and international military enrollment of 55.

Since this amendment involves only Naval activities, the DON BRAC office, with your concurrence, will execute any necessary data collection and analysis and provide the results to you. Should you have additional questions, please contact Lieutenant Colonel Mark Murphy at 703-602-6438.

Anne Rathmell Davis
Special Assistant to the Secretary of the Navy
for Base Realignment and Closure

cc: OSD BRAC Office
E&T JCSG Principals

DRAFT DELIBERATIVE DOCUMENT - FOR DISCUSSION PURPOSES ONLY - DO NOT RELEASE UNDER FOIA

DEPARTMENT OF THE NAVY
OFFICE OF THE SECRETARY
1000 NAVY PENTAGON
WASHINGTON, DC 20350-1000

01 February 2005

MEMORANDUM FOR CHAIRMAN, EDUCATION & TRAINING JOINT CROSS SERVICE GROUP

Subj: SCENARIO PROPOSAL CONSIDERATION FOR NAVY SUBMARINE SCHOOL

This is to inform you that the Department of the Navy intends to amend scenario DON 0033, Close Naval Submarine Base New London, CT. By previous agreement with your office, this scenario includes relocation of Navy Submarine School (SUBSCOL) to Naval Submarine Base Kings Bay, GA, relocation of the Navy Center for Submarine Learning (CENSUBLEARNING) to Naval Submarine Base Kings Bay, GA, and consolidation of applicable components of SUBSCOL with Submarine Training Facility Norfolk, VA

In order to pursue efficient use of existing facilities and training synergies, we will examine an alternate scenario to include relocation of NAVSUBSCOL and CENSUBLEARNING to Naval Station Newport, RI, and consolidation of applicable components of SUBSCOL with Trident Training Facility Kings Bay, GA, and Submarine Training Facility Norfolk, VA.

Should you have additional questions, please contact Commander Steve Cincotta at 703-602-6499 or LtCol Mark Murphy at 703-602-6438.

Anne R Davis

Anne Rathmell Davis
Special Assistant to the Secretary of the Navy
for Base Realignment and Closure

cc: OSD BRAC Office
E&T JCSG Principals

DRAFT DELIBERATIVE DOCUMENT - FOR DISCUSSION PURPOSES ONLY - DO NOT RELEASE UNDER FOIA

DEPARTMENT OF THE NAVY
OFFICE OF THE SECRETARY
1000 NAVY PENTAGON
WASHINGTON, DC 20350-1000

01 February 2005

MEMORANDUM FOR CHAIRMAN, EDUCATION & TRAINING JOINT CROSS SERVICE GROUP

Subj: SCENARIO PROPOSAL CONSIDERATION FOR NAVY SUPPLY CORPS SCHOOL

The Department of the Navy requests you consider an amendment to Candidate Recommendation E&T-0004, Establish Joint Center of Excellence for Supply and Logistics Training at Fort Lee, VA. This amendment would relocate Navy Supply Corps School from Athens, GA to Naval Station Newport, RI.

The DON installation at Athens, GA is primarily a single function installation supporting the Navy Supply Corps School. Based on the original E&T scenario, DON ran a concomitant scenario to completely close the installation supporting the Naval Supply School. The results of our scenario indicate that relocating the Supply School to another installation could result in large savings to the Department. Consistent with your analysis and in an attempt to utilize existing capacity, particularly at locations that already support educational processes, DON requests that you initiate a scenario to review the option of relocating the Naval Supply Corps School to Naval Station Newport. Moving the School could allow the DON to close this installation, resulting in significant savings.

Since this amendment involves only Naval activities, the DON BRAC office will execute any necessary data collection and analysis and provide the results to you. Should you have additional questions, please contact Lieutenant Commander Chris Sosa at 703-602-6444.

Anne Rathmell Davis
Special Assistant to the Secretary of the Navy
for Base Realignment and Closure

cc: OSD BRAC Office
E&T JCSG Principals

DRAFT DELIBERATIVE DOCUMENT - FOR DISCUSSION PURPOSES ONLY - DO NOT RELEASE UNDER FOIA