BRAC 2005
EDUCATION AND TRAINING JOINT CROSS-SERVICE GROUP
MEETING MINUTES OF JANUARY 13, 2005

The Principal Deputy Under Secretary of Defense (P&R), Mr. Charles Abell, chaired the 41st meeting of the E&T JCSG. Attendee List is at Attachment 1. The Specialized Skill Training representatives (Col James Briggs) briefed Subgroup status (Attachment 2). The following is a summary of the discussions:

The Army principal introduced Major Dave Smith, ARMY BRAC office, who responded to questions from members on the parameters used in the COBRA analysis (Criteria 5) for Scenario 00030 "Privatize Defense Language Institute Foreign Language Center (DLIFLC)". After the discussion, the chair thanked Major Smith for attending the meeting. Specialized Skill Training continued the meeting, briefing five scenarios (details at Attachment 2) for E&T JCSG consideration. The E&T JCSG:

- ***Deactivated E&T JCSG Scenario 0004 "Joint Center of Excellence for Supply (Logistics) Training (Fort Lee). Collaboration with the S&S JCSG revealed that this E&T scenario dealt with Service-specific retail supply functions which were not inherent to any S&S JCSG scenario. Analysis showed no significant savings by this action and no practical advantage..***
- ***Deactivated E&T JCSG Scenario 0018 "Establish Joint Center of Excellence for Intelligence Training (Goodfellow AFB, TX)." Analysis showed no savings gained by this action.***
- ***Delayed any decision on E&T JCSG Scenario 0041 "Consolidated Navy/Marine Crypto/Intelligence Training at Dam Neck, VA" pending additional information from the Navy (Navy BRAC-office through the Navy Principal).***
- ***Deactivated E&T JCSG Scenario 0042 "Consolidate Army/Air Force Crypto/Intelligence Training at Goodfellow AFB, TX." Analysis showed no savings gained by this action. Additionally, there were no synergies between Army and Air Force programs.***
- ***Deactivated E&T JCSG Scenario 0030 "Privatize DLI." The subgroup reported closure costs and verified that land sell costs would not be considered. In the group's military judgment, the analysis did not capture total costs. Additionally, DLI provides other capabilities that were not considered in the analysis. These capabilities must be preserved and performed by the government.***

The next scheduled meeting of the E&T JCSG is Wednesday, January 19, 2005.

Approved: _____
Charles S. Abell
Principal Deputy Under Secretary of Defense
(Personnel & Readiness)
Chairman, Education & Training
Joint Cross-Service Group

Attachments:
1. List of Attendees, January 13, 2005
2. Briefing Slides

Copies:
1. OSD BRAC Office
2. E&T JCSG Coordination Team
3. DoD IG

BRAC 2005
EDUCATION AND TRAINING JOINT CROSS-SERVICE GROUP
January 13, 2005

Attendees

Members:

- Hon Charles S. Abell, Principal Deputy Under Secretary of Defense (Personnel & Readiness) Chair
- Mr. Michael L. Dominguez, Assistant Secretary of the Air Force (Manpower and Reserve Affairs)
- BG Tom Maffey, USA, JCS VDJ-7
- BGen Thomas Conant, USMC, Deputy Director, Training and Education Command
- BG Louis Weber, Director, Training Army G-3 (DAMO-TR)
- CAPT Bill Wilcox, USN, N1D

Others:

- Dr. Paul Mayberry, Deputy Under Secretary of Defense for Readiness
- Mr. Bob Howlett, E&T JCSG Coordination Team
- Ms. Nancy Weaver, E&T JCSG Coordination Team
- Ms. Marsha Warren, Ctr., E&T JCSG Coordination Team
- Col Mike Massoth, USMC, Deputy Director, Training and Education Command
- RADM George Mayer, USN, Chairman, Flight Training Subgroup
- Col Joanna Shumaker, USAF, AF DPX
- Col James Briggs, USAF, AETC/DOO, Specialized Skill Training Subgroup
- CDR Greg Hilscher, USN, Navy-BRAC and SST Subgroup
- Col J Lynes, USMC, JCS/J-7, PDE Subgroup
- Col Bob Yauch, AF, PDE Subgroup
- Mr. Jose Alvarez, USA, Army G-3, PDE Subgroup
- Mr. Brian Buzzell, OSD BRAC Contract Support
- Ms. Melissa McBride, DoD/IG
- Capt Ernest Wearren, USAF, AF-BRAC Office
- LCDR Greg Riels, USN, RADM Mayer Aide
- Major Dave Smith, Army BRAC (TABS)

E&T JCSG Principals Meeting

January 13, 2005

Mr. Mike Dominguez
Acting Chairman, E&T JCSG

E&T JCSG Schedule – January

Monday	Tuesday	Wednesday	Thursday	Friday	Sat	Sun
					1	2
3	4 E&T POC Mtg	5 E&T JCSG 1300-1700	6 E&T JCSG 1300-1700	7 ISG Mtg 1030-1200	8	9
10	11 E&T POC Mtg	12 **E&T JCSG** **1300-1700 – 4E869** **(PDE/SST)**	13 **E&T JCSG** **1300-1600 - 3E752** **(FT/SST)**	14 ISG Mtg 1530-1700 *(E&T JCSG Briefs FT Philosophy)*	15	16
17 ***MLK Day***	18 E&T POC Mtg	19 **E&T JCSG** **1300-1700 - TBD** **(Ranges/PDE)**	20 ***Inauguration***	21 ISG Mtg 1030-1200	22	23
24	25 E&T POC Mtg	26 **E&T JCSG** **1300- 1700 - 4E869** **(PDE/Ranges)**	27 **E&T JCSG** **1300-1700 - 3E752** **(FT/SST)**	28 ISG Mtg 1030-1200	29	30
31						

E&T JCSG Schedule - February

Monday	Tuesday	Wednesday	Thursday	Friday	Sat	Sun
	1	2 **E&T JCSG** **1300-1700**	3 **E&T JCSG** **1300-1700**	4 ISG Mtg 1030-1200	5	6
7	8 E&T POC Mtg	9 ***E&T JCSG*** ***1300-1700***	10 **E&T JCSG** **1300-1700**	11 ISG Mtg 1030-1200	12	13
14	15 E&T POC Mtg	16 ***E&T JCSG*** ***1300-1700***	17 **E&T JCSG** **1300-1700**	18	19	20
21 **President's Day**	22 E&T POC Mtg	23 ***E&T JCSG*** ***1300-1700***	24 **E&T JCSG** **1300-1700**	25 ISG Mtg 1030-1200	26	27
28						

E & T JCSG Principals Meeting
13 January 2005

Specialized Skill Training Subgroup

Draft Deliberative Document - For Discussion Purposes Only - Do Not Release Under FOIA

SST Subgroup Scenario Timeline

Tracking Number	Scenario	SDC at MilDep	SDC at Activity	MilDep to JCSG	Initial COBRA Review	JCSG COBRA OK	Criteria 6&7	Criteria 8	Legal Rev	JCSG Final Approval
0004	JCE Supply	22 Nov	30 Nov	22 Dec	21 Dec	06 Jan	13 Jan	20 Jan	26 Jan	27 Jan
0005	Consolidate Trans Mgmt	22 Nov	30 Nov	17 Dec	3 Jan	06 Jan	13 Jan	20 Jan	26 Jan	27 Jan Hold Status
0014	JCE Religious	22 Nov	30 Nov	17 Dec	3 Jan	06 Jan	13 Jan	20 Jan	26 Jan	27 Jan
0015	JCE Legal	22 Nov	30 Nov	17 Dec	3 Jan	06 Jan	13 Jan	20 Jan	26 Jan	27 Jan
0016	JCE Culinary	22 Nov	30 Nov	17 Dec	21 Dec	06 Jan	13 Jan	20 Jan	26 Jan	27 Jan
0017	JCE Admin, Per, Finance	22 Nov	30 Nov	17 Dec	21 Dec	06 Jan	13 Jan	20 Jan	26 Jan	27 Jan Deactivate
0018	JCE Intel	22 Nov	30 Nov	17 Dec	21 Dec	06 Jan	13 Jan	20 Jan	26 Jan	27 Jan
0029	Army Prime Power	22 Nov	30 Nov	13 Dec	14 Dec	16 Dec	6 Jan	13 Jan	20 Jan	27 Jan
0030	Privatize DLI	22 Nov	30 Nov	03 Dec	29 Dec	06 Jan	13 Jan	20 Jan	26 Jan	27 Jan

Draft Deliberative Document - For Discussion Purposes Only - Do Not Release Under FOIA

Draft Deliberative Document - For Discussion Purposes Only - Do Not Release Under FOIA

SST Subgroup Scenario Timeline

Tracking Number	Scenario	SDC at MilDep	SDC at Activity	MilDep to JCSG	Initial COBRA Review	JCSG COBRA OK	Criteria 6&7	Criteria 8	Legal Rev	JCSG Final Approval
0031	DLI to Ft Meade	22 Nov	30 Nov	3 Dec	29 Dec	6 Jan	13 Jan	20 Jan	26 Jan	27 Jan
									Deactivate	
0039	JCE Diver Trng	24 Nov	30 Nov	9 Dec	14 Dec	16 Dec	6 Jan	6 Jan	10 Jan	13 Jan
0040	JCE Intel	24 Nov	30 Nov	27 Dec	21 Dec	06 Jan	13 Jan	20 Jan	26 Jan	27 Jan
									Deactivate	
0041	Navy/Marine Intel/Crypto	24 Nov	30 Nov	9 Dec	21 Dec	06 Jan	13 Jan	20 Jan	26 Jan	27 Jan
0042	Army/AF Intel/Crypto	24 Nov	30 Nov	17 Dec	23 Dec	06 Jan	13 Jan	20 Jan	26 Jan	27 Jan
0043	DLI to Goodfellow	24 Nov	30 Nov	17 Dec	29 Dec	06 Jan	13 Jan	20 Jan	26 Jan	27 Jan
									Deactivate	
0053	Consolidate Trans Mgmt	10 Dec	14 Dec	3 Jan	03 Jan	06 Jan	13 Jan	20 Jan	26 Jan	27 Jan
0055	Joint Strike Fighter (ITC) Eglin	17 Dec	23 Dec	7 Jan	13 Jan	20 Jan	27 Jan	27 Jan	3 Feb	4 Feb
0056	Joint Strike Fighter (MTC) Sheppard	17 Dec	23 Dec	7 Jan	13 Jan	20 Jan	27 Jan	27 Jan	3 Feb	4 Feb

Draft Deliberative Document - For Discussion Purposes Only - Do Not Release Under FOIA

Draft Deliberative Document - For Discussion Purposes Only - Do Not Release Under FOIA

SST Subgroup Scenario Timeline

Tracking Number	Scenario	SDC at MilDep	SDC at Activity	MilDep to JCSG	Initial COBRA Review	JCSG COBRA OK	Criteria 6&7	Criteria 8	Legal Rev	JCSG Final Approval
0057	Joint Strike Fighter (MTC) Pensacola	17 Dec	23 Dec	7 Jan	13 Jan	20 Jan	27 Jan	27 Jan	3 Feb	4 Feb
0059	Joint Strike Fighter (ITC) Kingsville	17 Dec	23 Dec	7 Jan	13 Jan	20 Jan	27 Jan	27 Jan	3 Feb	4 Feb
0060	Joint Strike Fighter (ITC) Columbus	17 Dec	23 Dec	7 Jan	13 Jan	20 Jan	27 Jan	27 Jan	3 Feb	4 Feb

Draft Deliberative Document - For Discussion Purposes Only - Do Not Release Under FOIA

Agenda

- E&T 0018 Establish Joint Center of Excellence for Intelligence Training (Goodfellow AFB, TX) Criterion 5, 6, 7, 8
- E&T 0041 Consolidated Navy/Marine Crypto/Intelligence Training at (Dam Neck, VA) Criterion 5, 6, 7, 8
- E&T 0042 Consolidated Army/Air Force Crypto/Intelligence Training at (Goodfellow AFB) Criterion 5, 6, 7, 8

- E&T 0004 Joint Center of Excellence for Supply (Logistics) Training (Fort Lee, VA) (E&T JCSG Discussion)
- E&T 0030 Privatize DLI (E&T JCSG Discussion)

Draft Deliberative Document - For Discussion Purposes Only - Do Not Release Under FOIA

E&T 0018 Establish Joint Center of Excellence for Intelligence Training (Goodfellow AFB, TX)

Scenario	Drivers/Assumptions
▪ Realign Goodfellow AFB, TX by establishing a Joint Center of Excellence for Intelligence Training. Realign NAS Oceana (Dam Neck Annex), Fleet Intelligence Training Center, NAVBASE Point Loma, San Diego, CA; Fort Huachuca, AZ by relocating Intelligence courses currently taught there to Goodfellow AFB, TX. Provide by disestablishing all intelligence training at NAVSTA Dam Neck, and San Diego, CA; Fort Huachuca, AZ and consolidating at Goodfellow AFB, TX. The intent of this scenario is to consolidate like courses while maintaining service unique culture.	▪ Principles: Organize and Train ▪ Transformational Options: Establish Centers of Excellence for Joint or Inter-service education and training by combining or co-locating like schools ▪ Establish "joint" officer and enlisted specialized skill training (initial skill, skill progression & functional)
Justification/Impact	**Potential Conflicts**
▪ Uses Inter-service Training Review Organization as the baseline ▪ Eliminates redundancy and cost ▪ Train as we fight "jointly"	▪ Conflicts with Army scenario to combine Intelligence School/Center and Signal School at Fort Gordon ▪ Navy and Marine Corps Intelligence Training is currently consolidated at new Navy Marine Intelligence Training Center facility at NAS Oceana, VA - Dam Neck Annex

Approved_x___ Disapproved_____ Revised_____ Deferred_____

Draft Deliberative Document - For Discussion Purposes Only - Do Not Release Under FOIA

Candidate # E&T 0018

Candidate Recommendation: Realign Goodfellow AFB, TX by establishing a Joint Center of Excellence for Intelligence Training. Realign NAS Oceana, VA (NAVSTA Dam Neck Annex), Point Loma, CA, and Fort Huachuca, AZ by relocating Intelligence courses currently taught there to Goodfellow AFB, TX. Provide by disestablishing all intelligence training at NAS Oceana, VA (NAVSTA Dam Neck Annex); Point Loma, CA, Fort Huachuca, AZ and consolidating at Goodfellow AFB, TX. The intent of this scenario is to consolidate like courses while maintaining service unique culture.

Justification

- ✓ Uses Inter-service Training Review Organization as the baseline
- ✓ Eliminates redundancy and cost
- ✓ Train as we fight "jointly"

Military Value

- ✓ Military Value:

	Initial Skills	Skills Progression	Functional
Goodfellow:	51.37	36.17	36.17
Point Loma:	32.80	43.10	46.13
NAS Oceana:	35.20	35.90	37.76
Fort Huachuca:	35.71	35.84	34.13

Payback

- ✓ One-time cost: $606.023
- ✓ MILCON: $419.254
- ✓ NPV $353.903
- ✓ Payback Yrs/Break Even Yr: 100+/2106+
- ✓ Steady State - $18.306
- ✓ Mil/Civ Reductions: 252/86
- ✓ Mil/Civ/Stu Relocated: 3,643/1,275/3,229

Impacts

- ✓ Criterion 6: 23.58% reduction in Fort Huachuca, AZ employment
- ✓ Criterion 7: No Issues
- ✓ Criterion 8: No issues

All Dollars Shown in Millions

☑ Strategy ☑ Capacity Analysis / Data Verification ☐ JCSG/MilDep Recommended ☑ De-conflicted w/JCSGs

☑ COBRA ☑ Military Value Analysis / Data Verification ☑ Criteria 6-8 Analysis ☑ De-conflicted w/MilDeps

Draft Deliberative Document - For Discussion Purposes Only - Do Not Release Under FOIA

E&T 0041 Consolidate Navy and Marine Corps Intelligence Training (Dam Neck, VA)

Scenario	Drivers/Assumptions
▪ Realign Dam Neck, VA by consolidating Navy and Marine Corps Intelligence Training. Realign NAS Pensacola, FL (Corry Station) by relocating Cryptology School and Center to NAS Oceana, VA (NAVSTA Dam Neck Annex). Provide by disestablishing all Cryptology training at NAS Pensacola, FL (Corry Station). The intent of this scenario is to consolidate like courses while maintaining service unique capabilities.	▪ Principles: Organize and Train ▪ Transformational Options: Establish Centers of Excellence for Joint or Inter-service education and training by combining or co-locating like schools ▪ Establish "joint" officer and enlisted specialized skill training (initial skill, skill progression & functional)
Justification/Impact	**Potential Conflicts**
▪ Uses Inter-service Training Review Organization as the baseline ▪ Train as you fight "jointly" ▪ Eliminates redundancy, leased space/costs	

Approved__x____ Disapproved_____ Revised_____ Deferred_____

Draft Deliberative Document - For Discussion Purposes Only - Do Not Release Under FOIA

Candidate # E&T 0041

Candidate Recommendation: Realign NAS Oceana, VA (NAVSTA Dam Neck Annex) by consolidating Navy and Marine Corps Intelligence Training. Realign NAS Pensacola, FL (Corry Station) by relocating Cryptology School and Center to NAS Oceana, VA (Dam Neck Annex). Provide by disestablishing all Cryptology training at NAS Pensacola, FL (Corry Station). The intent of this scenario is to consolidate like courses while maintaining service unique capabilities.

Justification

- ✓ Uses Inter-service Training Review Organization as the baseline
- ✓ Eliminates redundancy and cost
- ✓ Train as we fight "jointly"

Military Value

✓ Military Value:

	Initial Skills	Skills Progression	Functional
Dam Neck:	35.20	35.90	37.76
NAS Pensacola:	59.05	45.52	39.25

Payback

✓ One-time cost:	$205.388
✓ MILCON:	$193.780
✓ NPV	$219.257
✓ Payback Yrs/Break Even Yr:	Never/Never
✓ Steady State	$1.435
✓ Mil/Civ Reductions:	11/10
✓ Mil/Civ/Stu Relocated:	692/70/779

Impacts

- ✓ Criterion 6: No Issues
- ✓ Criterion 7: No Issues
- ✓ Criterion 8: Dam Neck impacted by laws and regulations for Marine Mammal Protection Act, has noise contours and discharges water to an impaired waterway.

All Dollars Shown in Millions

☑ Strategy ☑ Capacity Analysis / Data Verification ☐ JCSG/MilDep Recommended ☑ De-conflicted w/JCSGs

☑ COBRA ☑ Military Value Analysis / Data Verification ☑ Criteria 6-8 Analysis ☑ De-conflicted w/MilDeps

Draft Deliberative Document - For Discussion Purposes Only - Do Not Release Under FOIA

E&T 0042 Consolidate Army and Air Force Intelligence Training (Goodfellow, TX)

Scenario	Drivers/Assumptions
▪ Realign Goodfellow AFB, TX by consolidating Cryptology and Intelligence Training. Realign Fort Huachuca, AZ by relocating Intelligence School and Center to Goodfellow AFB, TX. The intent of this scenario is to consolidate like courses while maintaining service unique capabilities.	▪ Principles: Organize and Train ▪ Transformational Options: Establish Centers of Excellence for Joint or Inter-service education and training by combining or co-locating like schools ▪ Establish "joint" officer and enlisted specialized skill training (initial skill, skill progression & functional)
Justification/Impact	**Potential Conflicts**
▪ Uses Inter-service Training Review Organization as the baseline ▪ Train as you fight "jointly" ▪ Eliminates redundancy, leased space/costs	

Approved__x____ Disapproved_____ Revised_____ Deferred_____

Draft Deliberative Document - For Discussion Purposes Only - Do Not Release Under FOIA

Candidate # E&T 0042

Candidate Recommendation: Realign Goodfellow AFB, TX VA by consolidating Cryptology and Intelligence Training. Realign Fort Huachuca, AZ by relocating Intelligence School and Center to Goodfellow AFB, TX. The intent of this scenario is to consolidate like courses while maintaining service unique capabilities.

Justification

- ✓ Uses Inter-service Training Review Organization as the baseline
- ✓ Eliminates redundancy and cost
- ✓ Train as we fight "jointly"

Military Value

- ✓ Military Value:

	Initial Skills	Skills Progression	Functional
Goodfellow:	51.37	36.17	36.17
Fort Huachuca:	35.71	35.84	34.13

Payback

- ✓ One-time cost: $567.236
- ✓ MILCON: $386.354
- ✓ NPV $282.734
- ✓ Payback Yrs/Break Even Yr: 67/2075
- ✓ Steady State - $20.862
- ✓ Mil/Civ Reductions: 233/78
- ✓ Mil/Civ/Stu Relocated: 3,483/1,240/2,715

Impacts

- ✓ Criterion 6: 23.58% reduction in Fort Huachuca, AZ employment
- ✓ Criterion 7: No Issues
- ✓ Criterion 8: No issues

All Dollars Shown in Millions

☑ Strategy ☑ Capacity Analysis / Data Verification ☐ JCSG/MilDep Recommended ☑ De-conflicted w/JCSGs

☑ COBRA ☑ Military Value Analysis / Data Verification ☑ Criteria 6-8 Analysis ☑ De-conflicted w/MilDeps

Draft Deliberative Document - For Discussion Purposes Only - Do Not Release Under FOIA

ROI Summary

Scenario	One-Time Costs	Steady-State Savings	ROI Years	20 Year NPV
E&T 0018	$606.023	- $18.306	100+	$353.903
E&T 0041	$205.388	$1.435	Never	$219.257
E&T 0042	$567.236	- $20.862	67	$282.734

All Dollars Shown in Millions

Draft Deliberative Document - For Discussion Purposes Only - Do Not Release Under FOIA

Draft Deliberative Document - For Discussion Purposes Only - Do Not Release Under FOIA

Disposition of Billets/Positions

Scenario		OFF	ENL	CIV	STU	TOT
E&T 0018	Eliminate	41	211	86		338
	Move	557	3,086	1,275	3,229	8,147
E&T 0041	Eliminate	5	6	10		21
	Move	37	655	70	779	1,541
E&T 0042	Eliminate	35	198	78		311
	Move	500	2,983	1,240	2,715	7,438

Draft Deliberative Document - For Discussion Purposes Only - Do Not Release Under FOIA

One-Time Costs/Savings Summary

One - Time Costs/Savings FY 06 – FY11								
Scenario	Const	Pers	Ovhd	Move	Other	Total Costs	Svgs	Net Costs
E&T 0018	$419.254	$7.652	$17.624	$57.286	$104.206	$606.023	$7.265	$598.758
E&T 0041	$193.780	$0.470	$3.772	$4.523	$2.843	$205.388	$1.202	$204.186
E&T 0042	$386.354	$7.377	$16.798	$54.005	$102.702	$567.236	$6.862	$560.374

All Dollars Shown in Millions

Draft Deliberative Document - For Discussion Purposes Only - Do Not Release Under FOIA

MILCON Summary

Construction FAC Description				
Scenario: E&T 0018	UM	New	Rehab	Cost
Instructional Buildings and Classroom	SF	992,545		$173.045
Maintenance Buildings	SF	41,000		$ 6.631
Administrative and Headquarters Buildings	SF	180,010		$ 31.268
Housing, Barracks, Storage Facility, and Dining facility	SF	1,336,322		$185.557
Religious Facility, Child Care, Library, Family Center, Fitness Center, Recreation Center	SF	7,963	253,942	$ 22.751
TOTAL				$419.254

All Dollars Shown in Millions

Draft Deliberative Document - For Discussion Purposes Only - Do Not Release Under FOIA

Draft Deliberative Document - For Discussion Purposes Only - Do Not Release Under FOIA

MILCON Summary

Construction FAC Description				
Scenario: E&T 0041	**UM**	**New**	**Rehab**	**Cost**
Enlisted Unaccompanied Housing/Student Barracks	SF	295,017		$77.500
General Administrative Building	SF	69,662		$15.479
Training Aids Support Building	SF	22,763		$ 4.721
Applied Instruction Building	SF	296,655		$96.080
TOTAL				$193.780
Scenario: E&T 0042	**UM**	**New**	**Rehab**	**Cost**
Instructional and Classroom Buildings	SF	992,545		$173.045
Maintenance Buildings	SF	41,000		$ 6.631
Administrative/Unit Headquarters Buildings	SF	190,010		$ 31.268
Housing, Barracks, Dining Facility, and Parking	SF	651,564		$151.420
Storage Building	SF	14,766		$ 1.237
Religious Facility, Child Care, Library, Family Center, Fitness Center, Recreation Center	SF	7,963	253,942	$ 22.751
TOTAL				$386.354

All Dollars Shown in Millions

Draft Deliberative Document - For Discussion Purposes Only - Do Not Release Under FOIA

Draft Deliberative Document - For Discussion Purposes Only - Do Not Release Under FOIA

Recurring Costs/Savings Summary

Recurring Costs/Savings FY 06 – FY11						
Scenario	O&M	Mil Pers	Other	Total Costs	Svgs	Net Costs
E&T 0018	$113.034	$87.610	$20.328	$220.972	$273.907	- $54.958
E&T 0041	$45.471	$17.414	$0.000	$62.885	$51.251	$11.634
E&T 0042	$104.737	$83.480	$0.500	$188.717	$253.446	- $64.729

All Dollars Shown in Millions

Draft Deliberative Document - For Discussion Purposes Only - Do Not Release Under FOIA

Draft Deliberative Document - For Discussion Purposes Only - Do Not Release Under FOIA

Key Elements of Recurring Savings

Scenario: E&T 0018		
Element	Description	Total Recurring Savings ($M) FY06-FY11
O&M	Sustainment, Recap	$5.608
O&M	BOS	$73.120
O&M	Civilian Salary	$20.125
Military Personnel	Salary and Housing Allowances	$175.054
Scenario: E&T 0041		
O&M	Sustainment, Recap	$9.943
O&M	BOS	$20.398
O&M	Civilian Salary	$2.327
Military Personnel	Salary and Housing Allowances	$18.532
Scenario: E&T 0042		
O&M	Sustainment, Recap	$5.608
O&M	BOS	$66.885
O&M	Civilian Salary	$18.153
Military Personnel	Salary and Housing Allowances	$162.799

All Dollars Shown in Millions

Draft Deliberative Document - For Discussion Purposes Only - Do Not Release Under FOIA

Draft Deliberative Document - For Discussion Purposes Only - Do Not Release Under FOIA

C6 – Employment Change

Base	Direct Loss/Gain	Indirect Loss/Gain	Total Loss/Gain	%Of ROI Employment
E&T 0018	Goodfellow: 8,147 Huachuca: - 7,749 Oceana: -603 Point Loma: - 133	Goodfellow: 5,090 Huachuca: - 4,453 Oceana: -647 Point Loma: -121	Goodfellow: 13,237 Huachuca: -12,202 Oceana: -1,250 Point Loma: -254	Goodfellow: 20.50% Huachuca: - 23.58% Oceana: - 0.13% Point Loma: - 0.01%
E&T 0041	Oceana: 1541 Pensacola: -1,562	Oceana: 1,648 Pensacola: -1,997	Oceana: 3,189 Pensacola: - 3,559	Oceana: 0.33% Pensacola: - 1.69%
E&T 0042	Goodfellow: 7,438 Huachuca: - 7,749	Goodfellow: 4,672 Huachuca: - 4,453	Goodfellow: 12,110 Huachuca: - 12,202	Goodfellow: 18.75% Huachuca: - 23.58%

Notes: Goodfellow = Goodfellow AFB, TX in the San Angelo, TX Metropolitan Statistical Area
Huachuca = Ft. Huachuca, AZ in the Sierra Vista-Douglas, AZ Micropolitan Statistical Area
Oceana = NAS Oceana, VA in the Virginia Beach-Norfolk-Newport News VA Metropolitan Statistical Area
Pensacola = NAS Pensacola, FL in the Pensacola-Ferry Pass-Brent, FL Metropolitan Statistical Area
Point Loma = NAVBASE Point Loma,CA in the San Diego-Carlsbad-San Marcos, CA Metropolitan Statistical Area

Draft Deliberative Document - For Discussion Purposes Only - Do Not Release Under FOIA

Draft Deliberative Document - For Discussion Purposes Only - Do Not Release Under FOIA

C7 Issues – Profiles

- Issues identified in review of profiles (handout):
  - Goodfellow AFB, TX
    - None
  - Fort Huachuca, AZ
    - None
  - NAS Oceana, VA
    - None
  - NAS Pensacola
    - None
  - NAVBASE Point Loma
    - None

Draft Deliberative Document - For Discussion Purposes Only - Do Not Release Under FOIA

Draft Deliberative Document - For Discussion Purposes Only - Do Not Release Under FOIA

C8 Goodfellow AFB, TX - Installation Environmental Profile

Air Quality: Is in attainment for all Criteria Pollutants.

Cultural/Archeological/Tribal Resources: There is no programmatic agreement for historic property in place with the SHPO. Does not have sites with high archeological potential identified.

Dredging: No impediments to dredging.

Land Use Constraints/Sensitive Resource Areas: 346 Unconstrained acres available for development out of 1171 total acres. Has explosive safety quantity Distance Arcs none of which require safety waivers, and none with the potential for expansion..

Marine Mammal/Marine Resources/Marine Sanctuaries: Does not apply.

Noise: Does not have noise contours that extend off the installation's property. It does not have published noise abatement procedures for the main installation.

Draft Deliberative Document - For Discussion Purposes Only - Do Not Release Under FOIA

Draft Deliberative Document - For Discussion Purposes Only - Do Not Release Under FOIA

C8 Goodfellow AFB, TX - Installation Environmental Profile (cont)

Threatened and Endangered Species/Critical Habitat: Has federally-listed TES are not present, candidate species are not present, critical habitat is not present, and does not have a Biological Opinion.

Waste Management: Does not have a permitted RCRA Treatment Storage and Disposal Facility (TSDF). Does not have an interim or final RCRA Part X facility. Does not have an on-base solid waste disposal facility.

Water Resources: Does not discharge to an impaired waterway. Groundwater contamination is reported. Surface water contamination is not reported.

Wetlands: No wetlands areas restricted on the main installation.

Draft Deliberative Document - For Discussion Purposes Only - Do Not Release Under FOIA

Draft Deliberative Document - For Discussion Purposes Only - Do Not Release Under FOIA

C8 Naval Air Station Oceana, VA (Dam Neck, Annex)- Installation Environmental Profile

Air Quality: Is in Maintenance for 1 Hour Ozone. Is in an area projected or proposed to be designated non-attainment for the 8-hour Ozone or the PM2.5 NAAQS. It is in attainment for all other Criteria Pollutants.

Cultural/Archeological/Tribal Resources: Has been identified for historic property. There is a programmatic agreement for historic property in place with the SHPO. It has sites with high archeological potential identified, which restrict construction and current operations. The installation has potential archeological restriction to future construction.

Dredging: No impediments to dredging.

Land Use Constraints/Sensitive Resource Areas: 1020 unconstrained acres available for development out of 13,723 total acres. Has explosive safety quantity Distance Arcs. Reports being constrained by the laws, regulations, policies, or activities of non-DoD federal, tribal, state, or local agencies.

Marine Mammal/Marine Resources/Marine Sanctuaries: Is impacted by laws and regulations pertaining to Marine Mammal Protection Act, Essential Fish Habitats & Fisheries and Marine Sanctuaries, which may adversely restrict navigation and operations.

Draft Deliberative Document - For Discussion Purposes Only - Do Not Release Under FOIA

Draft Deliberative Document - For Discussion Purposes Only - Do Not Release Under FOIA

C8 Naval Air Station Oceana, VA (Dam Neck, Annex)- Installation Environmental Profile

Noise: Has noise contours that extend off the installation's property. It does not have published noise abatement procedures for the main installation.

Threatened and Endangered Species/Critical Habitat: Has federally-listed TES present that have delayed or diverted operations/training/testing, candidate species are not present, critical habitat is not present, and does not have a Biological Opinion.

Waste Management: Does not have a permitted RCRA Treatment Storage and Disposal Facility (TSDF). Does not have an interim or final RCRA Part X facility. Does not have an on-base solid waste disposal facility.

Water Resources: Discharges to an impaired waterway. Groundwater contamination is reported. Surface water contamination is not reported. Exceedances of drinking water standards are reported.

Wetlands: No wetlands areas restricted on the main installation.

Draft Deliberative Document - For Discussion Purposes Only - Do Not Release Under FOIA

Draft Deliberative Document - For Discussion Purposes Only - Do Not Release Under FOIA

C8 Fort Huachuca, AZ - Installation Environmental Profile

Air Quality: Is in attainment for all Criteria Pollutants.

Cultural/Archeological/Tribal Resources: Historic property has been identified. There is a programmatic agreement for historic property in place with the SHPO. It does have sites with high archeological potential identified. Formal consultation with Native Tribes is currently occurring.

Dredging: No impediments to dredging.

Land Use Constraints/Sensitive Resource Areas: 47,636 Unconstrained acres available for development out of 101,347 total acres. Has explosive safety quantity Distance Arcs none of which require safety waivers, and some with the potential for expansion. It has restrictions due to adjacent or nearby Sensitive Resource Areas.

Marine Mammal/Marine Resources/Marine Sanctuaries: Does not apply.

Noise: Does not have noise contours that extend off the installation's property. It does not have published noise abatement procedures for the main installation.

Draft Deliberative Document - For Discussion Purposes Only - Do Not Release Under FOIA

Draft Deliberative Document - For Discussion Purposes Only - Do Not Release Under FOIA

C8 Fort Huachuca, AZ - Installation Environmental Profile (cont)

Threatened and Endangered Species/Critical Habitat: Has federally-listed TES are present that have delayed or diverted operations/training/testing, candidate species are present, critical habitat is present, and the installation has a Biological Opinion that places restrictions on operations.

Waste Management: Does not have a permitted RCRA Treatment Storage and Disposal Facility (TSDF). Does not have an interim or final RCRA Part X facility. Does not have an on-base solid waste disposal facility.

Water Resources: Does not discharge to an impaired waterway. Groundwater contamination is reported. The installation is currently the subject of an adjudication under the McCarran amendment. Surface water contamination is not reported.

Wetlands: No wetlands areas restricted on the main installation.

Draft Deliberative Document - For Discussion Purposes Only - Do Not Release Under FOIA

Draft Deliberative Document - For Discussion Purposes Only - Do Not Release Under FOIA

C8 NAS Pensacola, FL (Corry Station) – Installation Environmental Profile

Air Quality: Is in attainment for all Criteria Pollutants.

Cultural/Archeological/Tribal Resources: Historic property has been identified. There is a programmatic agreement for historic property in place with the SHPO. It has sites with high archeological potential identified, which restrict current construction and current operations. The installation has potential archeological restrictions to future construction.

Dredging: No impediments to dredging.

Land Use Constraints/Sensitive Resource Areas: 1230 Unconstrained acres available for development out of 8,260 total acres. Has explosive safety quantity Distance Arcs none of which require safety waivers, and none with the potential for expansion..

Marine Mammal/Marine Resources/Marine Sanctuaries: Is impacted by laws and regulations which may adversely restrict navigation and operations.

Draft Deliberative Document - For Discussion Purposes Only - Do Not Release Under FOIA

Draft Deliberative Document - For Discussion Purposes Only - Do Not Release Under FOIA

C8 NAS Pensacola, FL (Corry Station) – Installation Environmental Profile

Noise: Has noise contours that extend off the installation's property. It does not have published noise abatement procedures for the main installation.

Threatened and Endangered Species/Critical Habitat: Has federally-listed TES present, candidate species are present, critical habitat is not present, and does not have a Biological Opinion.

Waste Management: Does not have a permitted RCRA Treatment Storage and Disposal Facility (TSDF). Does not have an interim or final RCRA Part X facility. Does not have an on-base solid waste disposal facility.

Water Resources: Does not discharge to an impaired waterway. Groundwater contamination is reported. Surface water contamination is not reported.

Wetlands: Has 11.2% wetlands areas restricted on the military installation.

Draft Deliberative Document - For Discussion Purposes Only - Do Not Release Under FOIA

Draft Deliberative Document - For Discussion Purposes Only - Do Not Release Under FOIA

C8 NAVBASE Point Loma, CA – Installation Environmental Profile

Air Quality: Is not in attainment for all Criteria Pollutants.

Cultural/Archeological/Tribal Resources: Historic property has been identified. There is a programmatic agreement for historic property in place with the SHPO. It has sites with high archeological potential identified, which restrict current construction and current operations. The installation has potential archeological restrictions to future construction.

Dredging: No impediments to dredging.

Land Use Constraints/Sensitive Resource Areas: 61 Unconstrained acres available for development out of 1,120 total acres. Has explosive safety quantity Distance Arcs none of which require safety waivers, and none with the potential for expansion..

Marine Mammal/Marine Resources/Marine Sanctuaries: Is not impacted by laws and regulations which may adversely restrict navigation and operations.

Draft Deliberative Document - For Discussion Purposes Only - Do Not Release Under FOIA

Draft Deliberative Document - For Discussion Purposes Only - Do Not Release Under FOIA

C8 NAVBASE Point Loma, CA – Installation Environmental Profile

Noise: Has not have noise contours that extend off the installation's property. It does not have published noise abatement procedures for the main installation.

Threatened and Endangered Species/Critical Habitat: Has federally-listed TES present, candidate species are present, critical habitat is not present, and does not have a Biological Opinion.

Waste Management: Does not have a permitted RCRA Treatment Storage and Disposal Facility (TSDF). Does not have an interim or final RCRA Part X facility. Does not have an on-base solid waste disposal facility.

Water Resources: Discharges to an impaired waterway. Groundwater contamination is not reported. Surface water contamination is not reported.

Wetlands: Has no wetlands areas restricted on the military installation.

Draft Deliberative Document - For Discussion Purposes Only - Do Not Release Under FOIA

Draft Deliberative Document - For Discussion Purposes Only - Do Not Release Under FOIA

Intelligence Training Scenarios Recap

- E&T 0018:
  - Break Even in 100+ years; not favorable NPV in 20 years
- E&T 0041:
  - Break Even is Never; not favorable NPV in 20 years
- E&T 0042:
  - Break Even in 67 years; not favorable NPV in 20 years

SST Scenario Recommendation

Recommend E&T 0042

Draft Deliberative Document - For Discussion Purposes Only - Do Not Release Under FOIA

Education & Training
Joint Cross Service Group
Flight Training Subgroup

Subgroup Proposals

USAF / USN / USMC / USA

Joint Undergraduate Flying Training Functions

for

BRAC 2005

Attachment 2

SecDef's Vector: "Think Joint"

"A primary objective of BRAC 2005, in addition to realigning our base structure to meet our post-Cold War force structure, is to examine and implement opportunities for greater joint activity. Prior BRAC analyses considered all functions on a service-by-service basis and, therefore, did not result in the joint examination of functions that cross services. While some unique functions may exist, those functions that are common across the Services must be analyzed on a joint basis …"

Donald Rumsfeld
15 November 2002

FT Assessment: Nothing to "Fix"

Present UFT programs satisfy Services' requirements in a timely and cost effective way … proposals may not substantially enhance flight training programs but they may well:

- **Free UFT Base(s) for other uses – or closure**
- **Increase joint and war-fighter interactivity at the Undergraduate and Graduate Formal Training Unit levels …**
- **Posture Services for acquisition of Joint training platforms in Rotary-wing and the Advanced Phase of Fixed-wing UFT**
  - **T-38 / T-45 Replacement over the Horizon …**
  - **T-6 is "Joint Platform" for UFT's Primary Phase …**
  - **Sundown for Joint USN / USAF T-44 Program after P-3 retires …**

FT Subgroup Tasking / Goals

- Craft Joint / Transformational Scenarios that Present "Opportunities for greater joint activity" on Fewer Bases
  - Consolidate Services' Common UFT Functions
  - Marry Select Advanced UFT with FTU / FRS Functions
- Recommend Installation(s) to Host JSF Initial Training Location(s) … Ops and Maintenance
- Organize UAV Initial Training across USG

Find "Common" Functions

Track		Fighter Strike Bomber		Airlift Tanker TACAMO		Turbo Maritime		CV AEW	Rotary		
Service		AF	DoN	AF	DoN	AF	DoN	DoN	USA	AF	DoN
Aircraft		T-38	T-45	T-1		TC-12/T-44		T-44/45	TH-67	UH-1	TH-57
Formation		✓	✓	✓	✓	✓	✓	✓	✓	✓	✓
Instrument		✓	✓	✓	✓	✓	✓	✓	✓	✓	✓
Nav	Low-level	✓	✓	✓	✓	✓	✓	✓	✓	✓	✓
	En route	✓	✓	✓	✓	✓	✓	✓			
CV Ops			✓					✓			✓
Weapons			✓								
ACM			✓								
Tactical Ops									✓		
Remote Ops									✓		
NVG Ops									✓	✓	✓

FT "Big Picture"

- Goal: Realign Assets to "Enhance Jointness" & "Uncover Bases"
- Undergraduate Flight Training Sub-functions
  - Primary Phase of Flight Training
  - Advanced Phase of Flight Training
  - Naval Flight Officer & Navigator Training
  - Rotary Wing Flight Training

  Domino Effect: Consolidating assets for these programs will "drive" moves across most UFT bases
- Realigning UFT will impact production during transition
- JSF Beddown is a "wildcard" that presents two options
  - Follow tradition of "standalone" FRS / FTU
  - Combine with Advanced Phase of UFT – Transformational
- Final proposals data-driven – Military Value and Derived Capacity

FT "Big Picture"

- Force lay down Rules of Engagement
  - Optimization Model set Baseline for force lay-down drills
  - Excess capacity figures based on FY04 (Before) & FY09 (After)
  - Distribution based on student throughput in FY09
  - Target 80% of "Max Runway Operations Capacity"
  - Use aux fields & airspace capacity at "uncovered" bases if in close proximity

FT "Big Picture"

- Realignment proposals within three major concepts
  - Status Quo … Maximize MilVal on Fewest # Bases
    - JSF FRS / FTU at "standalone" base
    - Keep assets aligned as they are today … JPATS, NFO/Nav/Parent Service
  - Cooperative … Maximize Jointness, MilVal on Fewest # Bases
    - JSF FRS / FTU at "standalone" base
    - Realign sub-functions to create a more joint environment
  - Transformational … Cooperative + Posture for Next Gen Acft
    - High Octane Cooperative … Marries advanced phases of UFT with appropriate/select FRS / FTU (target non-operational bases if able)
    - Legacy/Strike Pipeline for F-15, F-16, & F-18 virtually unchanged

FT "Big Picture"

Status Quo

FT "Status Quo" USN

- Realign the following bases by re-locating and consolidating USN Undergraduate Pilot and Naval Flight Officer Flight Training Programs
  - NAS Corpus Christi (Primary Plus Up/ME MPTS)
  - NAS Kingsville (Advanced Plus Up)
  - NAS Meridian (Primary)
  - NAS Pensacola (NFO/RW)
- Realign and re-locate units from the following USN Undergraduate Flying Training bases
  - NAS Whiting Field

Draft Deliberative Document –For Discussion Purposes Only –Do Not Release Under FOIA

FT "Status Quo" USN

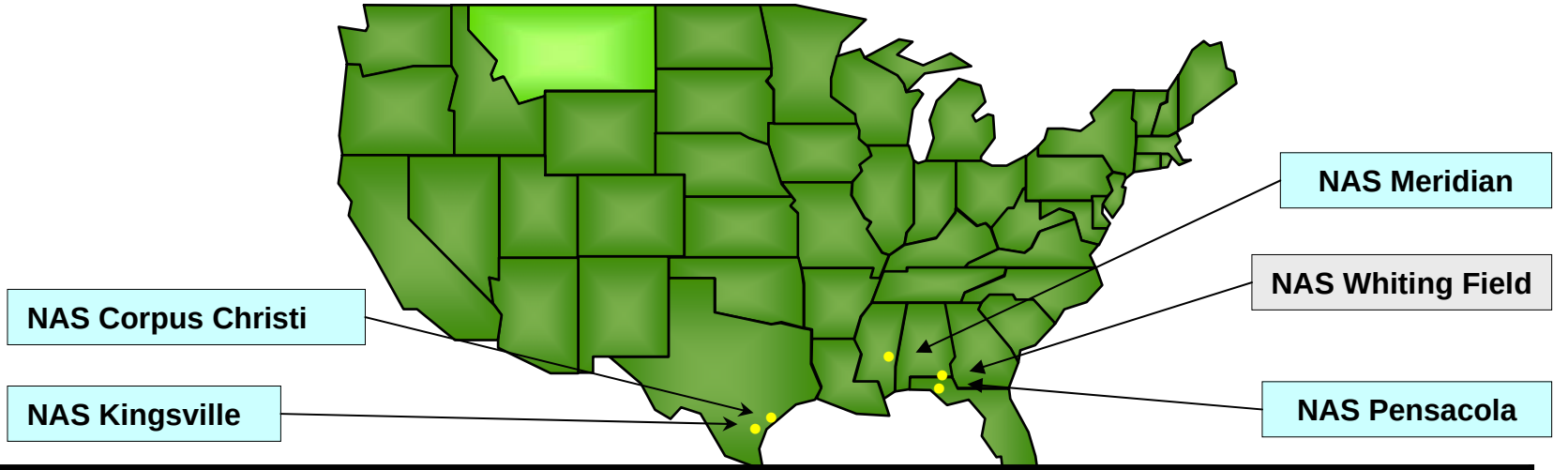

Base	Mil Val	Student Throughput				Excess Runway Capacity	
		Pri	Adv	NFO/Nav	Rotary	Before	After
NAS Pensacola	69.20			1301	565	71.25%	71.97%*
NAS Meridian	63.64	700				32.88%	30.67%
NAS Whiting Fld	63.61					73.88%	
NAS Kingsville	63.34		317			64.66%	12.11%
NAS Corpus Christi	61.89	678	504			42.00%	20.72%
NAS Whiting Fld	63.26					50.00%	
Totals	64.52					59.93%	28.66%

*FW capacity only, placing helicopter operations further reduces excess capacity.

*NAS Pensacola would acquire NAS Whiting Field helicopter airspace and OLFs.

FT "Status Quo"USAF

- Realign the following bases by re-locating and consolidating USAF Undergraduate Pilot and Combat Systems Officer Flying Training Programs
  - Columbus AFB (IFF/Primary/Advanced)
  - Laughlin AFB (Primary/Advanced)
  - Fort Rucker (Rotary Wing)
  - Sheppard AFB (ENJJPT/PIT)
  - Vance AFB (Primary/Advanced/CSO)
- Realign and re-locate units from the following USAF Undergraduate Flying Training bases
  - Moody AFB
  - Randolph AFB

Draft Deliberative Document –For Discussion Purposes Only –Do Not Release Under FOIA

FT "Status Quo" USAF

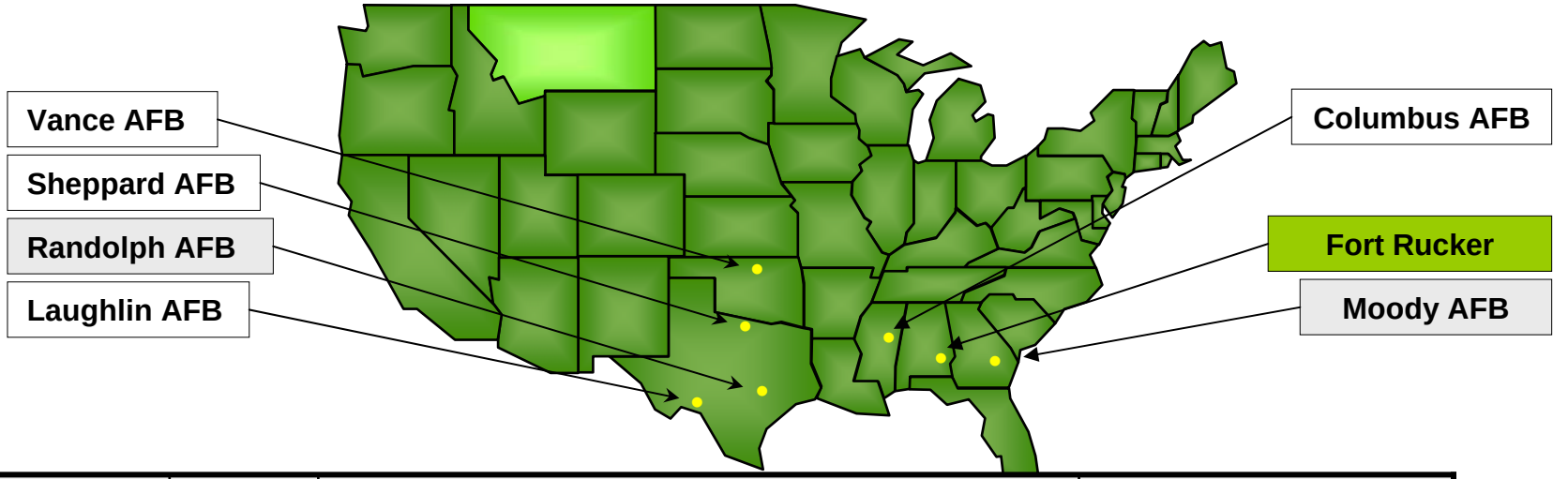

Base	Mil Val	Student Throughput				Excess Runway Capacity	
		Pri	Adv	NFO/Nav	Rotary	Before	After
Vance AFB	66.37	409	335	765		38.81%	28.30%
Laughlin AFB	63.94	475	353			38.26%	28.41%
Columbus AFB	62.88	345	573			36.21%	38.59%
Randolph AFB	62.62					77.54%	
Sheppard AFB	62.51	166	916			35.62%	19.55%
Moody AFB	58.14					47.87%	
Fort Rucker	75.54				65	82%	82%
Totals	66.25					46.87%	28.99%

FT "Big Picture"

Cooperative

FT "Cooperative"

- Realign the following bases by re-locating and consolidating USA, USAF, and USN Undergraduate Pilot and Naval Flight Officer / Combat Systems Officer Flying Training Programs
  - Columbus AFB (Advanced/IFF)
  - NAS Corpus Christi (Advanced/ME MPTS)
  - NAS Kingsville (Advanced)
  - Laughlin AFB (Primary)
  - NAS Meridian (Primary)
  - NAS Pensacola (NFO / CSO)
  - Fort Rucker (RW Plus Up)
  - Sheppard AFB (PIT/ENJJPT)
  - Vance AFB (Primary)
- Realign and re-locate units from the following USAF and USN Undergraduate Flying Training bases
  - Moody AFB
  - Randolph AFB
  - NAS Whiting Field

Draft Deliberative Document –For Discussion Purposes Only –Do Not Release Under FOIA

FT "Cooperative"

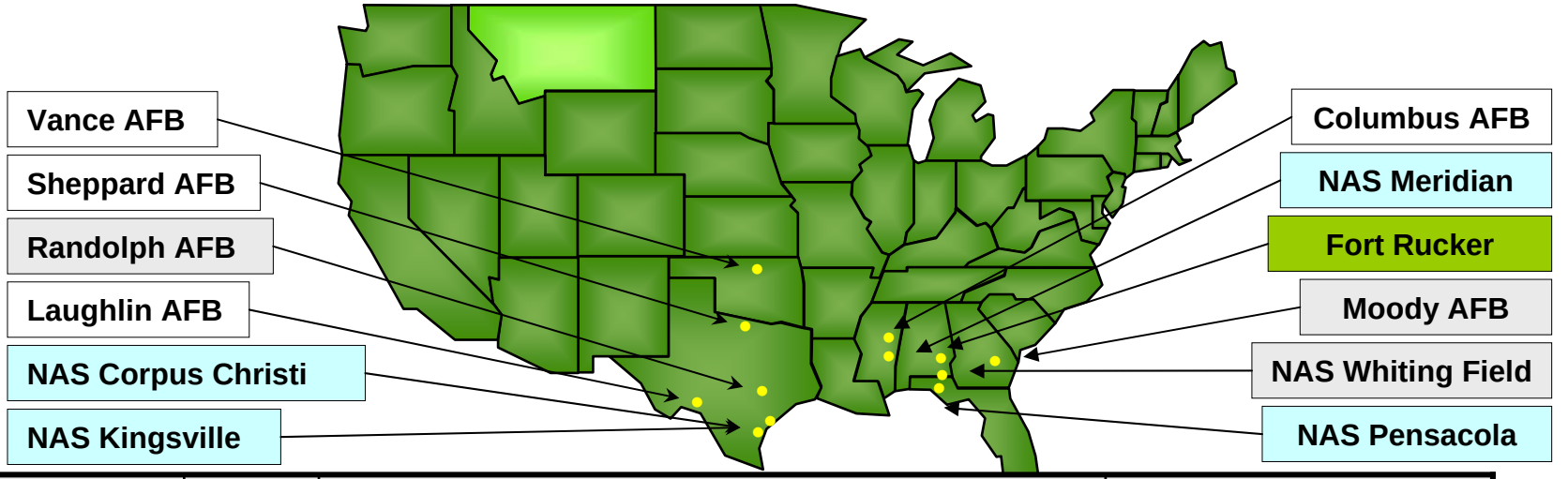

Base	Mil Val	Student Throughput				Excess Runway Capacity	
		Primary	Advanced	NFO/CSO	Rotary	Before	After
NAS Pensacola	69.20			2066		71.25%	63.74%
Vance AFB	66.37	1007				38.81%	24.54%
Laughlin AFB	63.94	800				38.26%	42.23%
NAS Meridian	63.64	800				32.88%	4.40%
NAS Whiting Field	63.61					73.88%	
NAS Kingsville	63.34		317			64.66%	12.11%
Columbus AFB	62.88		609			36.21%	56.06%
Randolph AFB	62.62					77.54%	
Sheppard AFB	62.51	166	1082			35.62%	19.55%
NAS Corpus Christi	61.89		1156			42.00%	12.94%
Moody AFB	58.14					47.87%	
Fort Rucker	75.54				1882	82%	77.6%
NAS Whiting Field	63.26					50%	
Totals	65.46					52.90%	28.85%

Transformational Options

JSF Selection Process Overview

- Started with Joint Strike Fighter selection criteria developed by the Joint Program Office
  - Criteria included requirements for runway, airspace, weather, and distance to coastline
- Applied criteria to all CONUS airfields in DoD
- Used military judgment to "tap out" airfields that met basic criteria and steered away from operational bases that,
  - Host aircraft firmly based in the future years force structure
  - Host missions that would preempt JSF mission (e.g. Andrews)
- Steered away from bases dedicated to Reserve forces or hosted major Civil Operation(s)

Step 1: Process of Elimination

❑ Airfields in "DOD Airfield Suitability Requirements Report"		3318
❑ Subtract bases / airfields overseas	-	2353
		965
❑ Subtract airfields with field elevation >3000ft MSL	-	127
		838
❑ Subtract airfields with main runway <8000ft in length	-	534
		304
❑ Subtract Civil, Guard, Reserve	-	231
		73
❑ Subtract bases without a second runway 8000ft in length	-	42
Remaining		31

Step 2: Apply Military Judgment

- Of 31 bases that meet basic criteria we "dropped" these 16 because:

Altus AFB	Strategic Airlift Training Base
Andrews AFB	DV airlift, proximity to DC
Dover AFB	Airlift hub, Joint use
Luke AFB	F-16 training base
McConnell AFB	KC-135 operational base
Scott AFB	HQ for TRANSCOM and AMC
Tinker AFB	Operational base for AWACS, TACAMO.
Travis AFB	Airlift hub and operational base
NAS Miramar	Operational base for fixed wing, RW, and Reserves
NAS Oceana	Operational base for F-18, encroachment
Nellis AFB	Operations/Exercise range
NAS Patuxent River	T&E installation
NAS Whidbey Island	Service specific aircraft
NAS Brunswick	Weather
China Lake NAWS	T&E installation
NAS Lemoore	Service specific aircraft

Step 3: MilVal Score Ranking

BASE	Airfield Capacity (22.50)	Weather (11.00)	Environ -ment (15.55)	Quality of Life (11.10)	Managed Training Areas (27.05)	Ground Training Facilities (12.80)	Total (100)	Rank
Eglin AFB	8	7	6	9	1	6	74.49	1
Cherry Point MCAS	1	2	7	10	6	11	73.58	2
Laughlin AFB	12	9	1	3	4	5	72.27	3
Tyndall AFB	2	3	12	7	10	1	70.61	4
Pensacola NAS	14	4	5	1	9	8	70.06	5
Vance AFB	4	14	3	5	8	3	70.00	6
Columbus AFB	10	11	2	13	7	4	69.36	7
Kingsville NAS	11	6	9	11	2	13	68.76	8
Meridian NAS	6	10	13	6	3	14	67.59	9
Randolph AFB	13	13	14	8	5	2	66.43	10
Shaw AFB	5	5	4	12	14	7	66.15	11
Yuma MCAS	7	1	15	14	13	15	61.84	12
Beaufort MCAS	15	8	11	2	11	10	61.59	13
Moody AFB	3	15	10	15	12	9	60.90	14
Sheppard AFB	9	12	8	4	15	12	59.69	15

* Blue scores above median, red scores below

FT JSF "Stand alone" Option

Recommended "Best in Show" for Stand Alone …

- **Realign Eglin AFB by establishing it as the Joint Strike Fighter Initial Training Site for a consolidated USN, USMC, and USAF Graduate-level Pilot Training Program**
  - **Complements other proposals FT advanced in the "Status Quo" and "Cooperative" business models**
  - **May require USAF to relocate assets presently assigned to 33rd Fighter Wing and 53rd Wing**

FT JSF "Stand alone" Option

Not Recommended

- **Realign the following bases by establishing one as the Joint Strike Fighter Initial Training Site for a consolidated USN, USMC, and USAF Graduate-level Pilot Training Program**

BASE	Mil Val	Rank	RATIONALE
Cherry Point MCAS	75.38	2	AV-8 & KC-130 FRS and Operational Mission preclude JSF selection
Laughlin AFB	72.27	3	T-6 infrastructure in place, role as transformational UFT location
Tyndall AFB	70.61	4	F/A-22 Initial Bed down
NAS Pensacola	70.06	5	NFO / NAV training base – Encroachment of Pensacola
Vance AFB	70.00	6	T-6 infrastructure (receiving 2005), role as transformational UFT location
Columbus AFB	69.36	7	Valid JSF Option – Proposed in Transformational Re-alignment Option #1
NAS Kingsville	68.76	8	Valid JSF Option – Proposed in Transformational Re-alignment Option #2
NAS Meridian	67.59	9	Military Value Scores and future missions make JSF bed down at these sites less feasible than bases named above.
Randolph AFB	66.43	10	
Shaw AFB	66.15	11	
Yuma MCAS	61.84	12	
MCAS Beaufort	61.59	13	
Moody AFB	60.90	14	
Sheppard AFB	59.69	15	

FT "Transformational Options" Option 1

- Consolidate Undergraduate Primary Flight Training (T-6) programs
  - NAS Kingsville
  - Laughlin AFB
  - NAS Pensacola (NFO / CSO)
  - Vance AFB
- Re-align advanced phases of UFT with appropriate FRS / FTU (target non-operational bases if able)
  - Little Rock AFB (T-1)
  - Altus AFB (T-1)
  - Tinker AFB (T-1)
  - NAS Jacksonville (TC-12 / T-44)
  - Columbus AFB (JSF)
- Retain advanced training for F-15, F-16, & F-18 Programs
  - Sheppard AFB (ENJJPT)
  - NAS Kingsville
- Realign and re-locate units from the following USAF and USN Undergraduate Flying Training bases
  - NAS Corpus Christi
  - NAS Meridian
  - Moody AFB
  - NAS Whiting Field

Draft Deliberative Document –For Discussion Purposes Only –Do Not Release Under FOIA

FT "Transformational" Option 1

Base	Mil Val	Student Throughput					Excess Runway Capacity	
		Primary	Advanced	NFO/CSO	Rotary	JSF	Before	After
NAS Pensacola	69.20			2066			71.25%	63.74%
Vance AFB	66.37	1070					38.81%	19.52%
Laughlin AFB	63.94	950					38.26%	31.40%
NAS Meridian	63.64						32.88%	
NAS Whiting Field	63.61						73.88%	
NAS Kingsville	63.34	587	117				64.66%	14.26%
Columbus AFB	62.88		609			250	36.21%	34.37%
Randolph AFB	62.62		600				77.54%	80.75%
Sheppard AFB	62.51	166	616				35.62%	19.66%
NAS Corpus Christi	61.89						42.00%	
Moody AFB	58.14						47.87%	
Altus AFB			407*					
Tinker AFB			45*					
Little Rock AFB			200*					
NAS Jacksonville			354**					
Fort Rucker	75.54				1882		82%	**77.6%**
NAS Whiting Field	63.26						50%	
Totals	65.80						52.90%	37.94

* Station T-1 aircraft at Altus, Tinker, and Little Rock to "feed" production requirements for C-130, C-17, KC-135, E-6, and E-3 aircraft in FY09

** Station TC-12 and T-44 aircraft at NAS Jacksonville to "feed" P-3 and tilt-rotor programs

FT "Transformational Options" Option 2

- Consolidate Undergraduate Primary Flight Training (T-6) programs
  - Laughlin AFB
  - NAS Corpus Christi
  - NAS Pensacola (NFO / CSO)
  - Vance AFB
- Re-align advanced phases of UFT with appropriate FRS / FTU (target non-operational bases if able)
  - Little Rock AFB (T-1)
  - Altus AFB (T-1)
  - Tinker AFB (T-1)
  - NAS Jacksonville (TC-12 / T-44)
  - NAS Kingsville (JSF)
- Retain advanced training for F-15, F-16, & F-18 Programs
  - Columbus AFB (USAF PIT)
  - Sheppard AFB (ENJJPT)
  - NAS Meridian
- Realign and re-locate units from the following USAF and USN Undergraduate Flying Training bases
  - Moody AFB
  - Randolph AFB
  - NAS Whiting Field

Draft Deliberative Document –For Discussion Purposes Only –Do Not Release Under FOIA

FT "Transformational" Option 2

Base	Mil Val	Student Throughput					Excess Runway Capacity	
		Primary	Advanced	NFO/CSO	Rotary	JSF	Before	After
NAS Pensacola	69.20			2066			71.25%	45.69%
Vance AFB	66.37	920					38.81%	29.59%
Laughlin AFB	63.94	850					38.26%	39.24%
NAS Meridian	63.64		167				32.88%	39.95%
NAS Whiting Field	63.61						73.88%	
NAS Kingsville	63.34		250			250	64.66%	33.20%
Columbus AFB	62.88		1109				36.21%	44.73%
Randolph AFB	62.62						77.54%	80.75%
Sheppard AFB	62.51	166	316				35.62%	19.66%
NAS Corpus Christi	61.89	837					42.00%	40.34%
Moody AFB	58.14						47.87%	
Altus AFB			407*					
Tinker AFB			45*					
Little Rock AFB			200*					
NAS Jacksonville			354**					
Fort Rucker	75.54				1882		82%	**77.6%**
NAS Whiting Field	63.26						50%	
Totals	65.80						52.90%	40.07%

* Station T-1 aircraft at Altus, Tinker, and Little Rock to "feed" production requirements for C-130, C-17, KC-135, E-6, and E-3 aircraft in FY09

** Station TC-12 and T-44 aircraft at NAS Jacksonville to "feed" P-3 and tilt-rotor programs

Competing UFT/JSF Scenarios*

	Undergraduate Fight Training		Initial JSF Flight Training
1	Scenario 44 & 45 (Status Quo)	+	Scenario 52 (Eglin)
or			
2	Scenario 46 (Cooperative)	+	Scenario 52 (Eglin)
or			
3	Scenario 47 (Transformational	*with*	JSF @ Columbus)
or			
4	Scenario 48 (Transformational	*with*	JSF @ Kingsville)

*** Alternative scenarios include variants of 44/45, 46, 47, & 48 … uncover fewer bases**

Scenario 06 (consolidate helo training) part of scenarios 46, 47, & 48

FT Subgroup Capacity Analysis Summary

More Joint / Transformational

Scenario #	Scenario Title	Excess Rwy Capacity	
		Before	After
E&T 0006	Consolidate Rotary wing Training	81.89%	77.36%
E&T 0044	"Status Quo" Consolidate USN UPT	59.93%	28.66%
E&T 0045	"Status Quo" Consolidate USAF UPT	46.87%	28.99%
E&T 0046	Cooperative; Realign & Consolidate DoD UPT, NAV, NFO, & CSO Training	52.90%	28.85%
E&T 0047	Transformational; JSF to Columbus AFB	52.90%	37.94%
E&T 0048	Transformational; JSF To NAS Kingsville	52.90%	40.07%
E&T 0052	JSF "Stand Alone" Initial Training Site		

- **FT Subgroup scenarios "uncover" from 1 base to 4 bases (scenario dependent)**
- **7 of 9 FT Subgroup scenarios set the stage for joint/transformational opportunity**

Response to AETC Concerns About UFT Scenarios

Vance AFB: Capacity Analysis for Primary Pilot Training

- **Airfield capacity (daylight runway ops)**
  - Home field: 447,111 ops/yr
  - Kegelman OLF: 138,696 ops/yr

    585,807 ops/yr
- **Runway requirements**
  - USN (T-6) 368 ops/PTR
  - USAF (T-6) 520 ops/PTR
- **Airspace capacity (sq. n.mi. SUA)**
  - Vance MOA: 8,391 sq n.mi.
  - Availability: 12 hrs/day & 244 days/yr
- **Airspace requirement**
  - 56 sorties (+ 15% overhead)
  - 180 sq. n.mi. blocks
  - .7 hr time in block (plus 15 min buffer)

Scenario	PTR	Runway requirement
46	1048	457,104
47	1090	475,600
48	911	399,848

Scenario	PTR	Airspace requirement
46	1090	4,320
47	1048	3,960
48	911	3,600

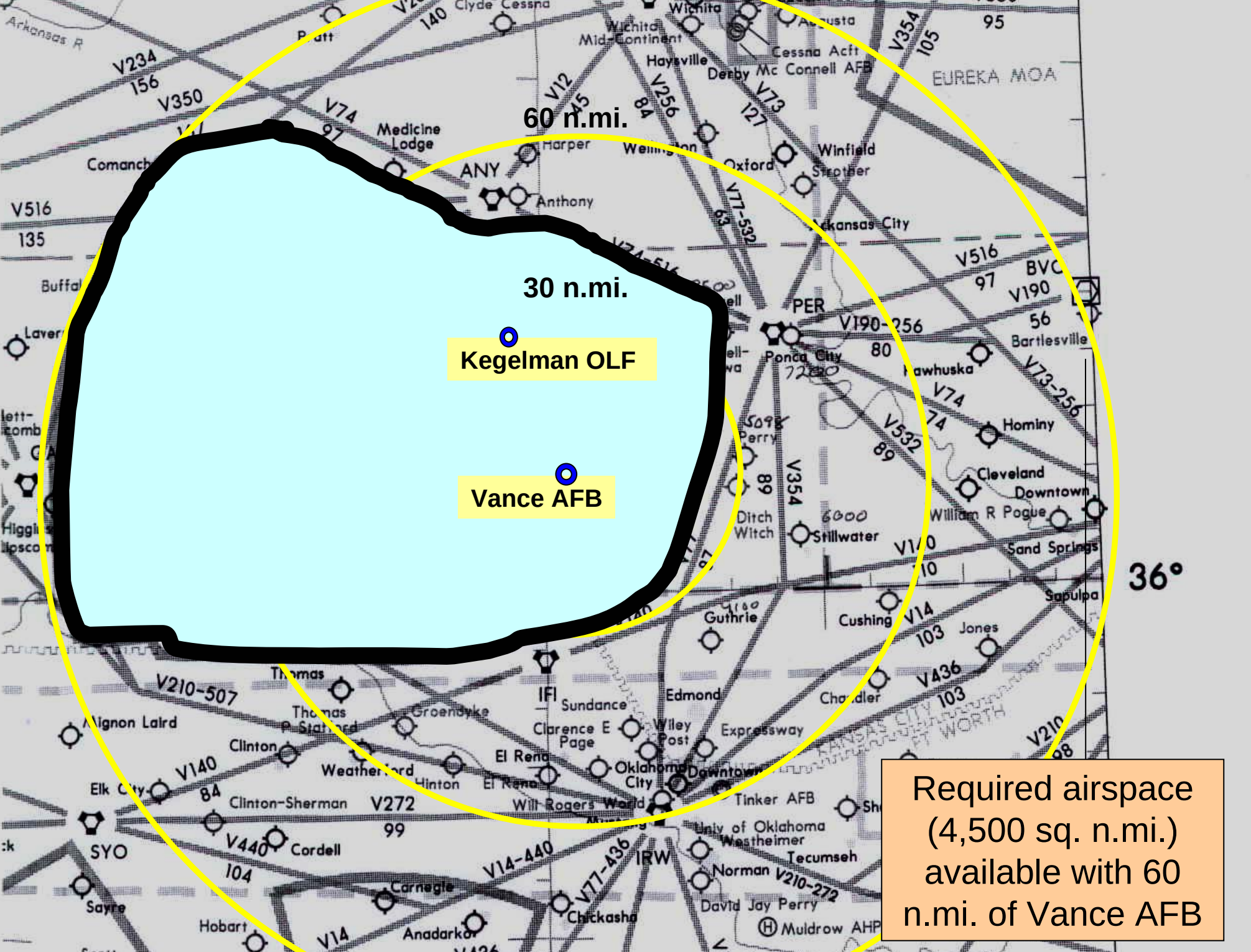
60 n.mi.
30 n.mi.
Kegelman OLF
Vance AFB
Required airspace (4,500 sq. n.mi.) available with 60 n.mi. of Vance AFB
36°
EUREKA MOA
Wichita
Wichita Mid-Continent
Haysville
Derby
Mc Connell AFB
Cessna Acft
Clyde Cessna
Medicine Lodge
Harper
ANY
Anthony
Winfield
Strother
Oxford
Arkansas City
PER
Ponca City
Bartlesville
Hominy
Cleveland
Downtown
William R Pogue
Sand Springs
Sapulpa
Stillwater
Ditch Witch
Guthrie
Cushing
Jones
Chandler
Edmond
Sundance
IFI
Clarence E Page
Wiley Post
Expressway
Oklahoma City
Downtown
Tinker AFB
Will Rogers World
Univ of Oklahoma
Westheimer
Tecumseh
Norman
IRW
David Jay Perry
Muldrow AHP
Chickasha
Anadarko
Carnegie
Hobart
Cordell
Clinton-Sherman
Clinton
Weatherford
Hinton
El Reno
Elk City
SYO
Sayre
Thomas
Groendyke
Alignon Laird
Arkansas R
Comanch
Buffal
Laver
Higgi
Bloscom
Kansas City
KANSAS CITY
FT WORTH
V234 156
V350
V74 97
V516 135
V516 97
V190 56
V190-256 80
V73-256
V532 89
V354 105
V354 89
V73 127
V256 84
V12 45
V77-532 63
V140 84
V272 99
V440 104
V14-440
V77-436
V210-507
V210-272
V436 103
V14 103
V210 98
V140
V14
BVC
95

Pattern Congestion Issues

- Several nearby civilian fields could be used as OLFs to alleviate pattern congestion at Vance and Kegelman OLF
- Some may require cost for extensions in COBRA analysis

Perry Municipal Airport

30 n.mi. from Vance AFB

Runway 17/35 Information

Dimensions: 5098 x 75 ft. / 1554 x 23m

Surface: asphalt, in good condition

Weight limitations:

Single wheel: 75000 lbs

Double wheel: 130000 lbs

Runway edge lights: medium intensity

Scenarios could shift use of airspace /aux fields

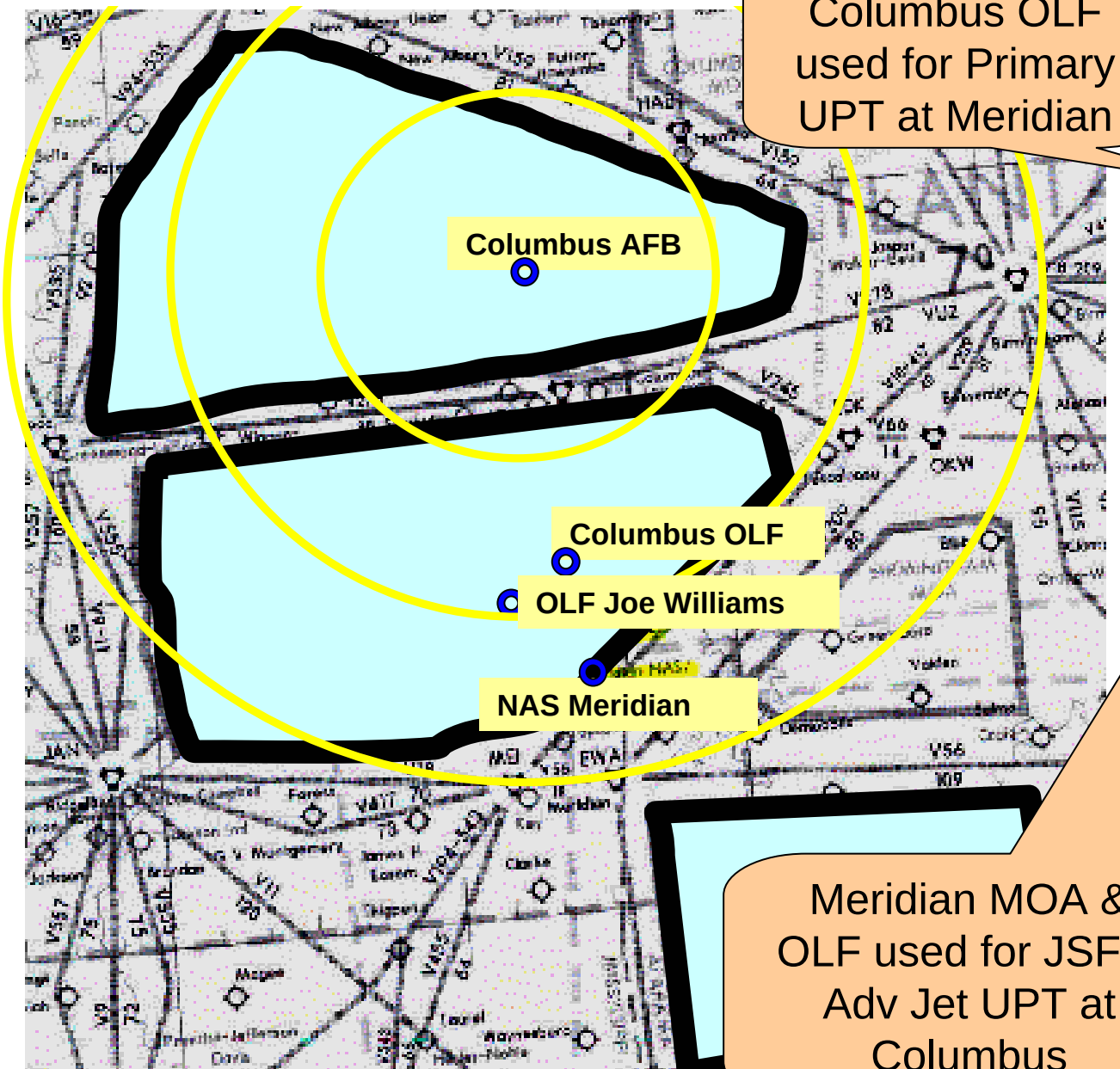

Columbus OLF used for Primary UPT at Meridian

Meridian MOA & OLF used for JSF & Adv Jet UPT at Columbus

Scenario 46

- **Columbus AFB**
  - **Fighter/Bomber**
  - **IFF**
- **NAS Meridian**
  - **Joint Primary**

Scenario 47

- **Columbus AFB**
  - **Grad JSF**
  - **Adv Jet**
  - **IFF**
- **NAS Meridian**
  - **Uncovered**

Scenario 48

- **Columbus AFB**
  - **Fighter/Bomber**
  - **PIT**
- **NAS Meridian**
  - **USN Strike**
  - **Adv E2/C2**

Capacity Concerns - Sheppard AFB

AETC Concerns:

- **All scenarios show large tasking increases for Sheppard (CSO and PIT, or PIT only, or IFF/T-38)**
- **Unprecedented increases in flying hours/aircraft (ie #45)**
  - **Current: 66,000 hours per year**
  - **Add PIT: 40,000 hours per year**
  - **Add CSO: 34,500 (T-6 and T-1) hours per year**
  - **New Total: 141,000 hours per year**
  - **Not executable (airspace, FAA constraints, runways and weather)**
- **No Euro-NATO training growth opportunity in most options**

Actions for Sheppard AFB:

- Scenario 45: Status Quo
  - Sheppard gains PIT
- Scenario 46: Cooperative
  - Sheppard gains PIT
- Scenario 47: Transformational #1
  - Sheppard gains Fighter/Bomber and IFF
- Scenario 48: Transformational #2
  - No change

Not part of Scenario 45

New Total: 106,000 hr/yr

"Split" vs. "Consolidated"

- Debate Continues ….

- USAF uses "consolidated" (multiple MDSs) concept
- USN mostly uses "split" (single MDS) concept
- Cooperative scenario calls for split concept (single function bases)
- Transformation scenarios calls for both "consolidated" and "split" concept bases

- Which is more effective/efficient?
  - Pros / Cons for each concept

Transformational PCS Move Concerns

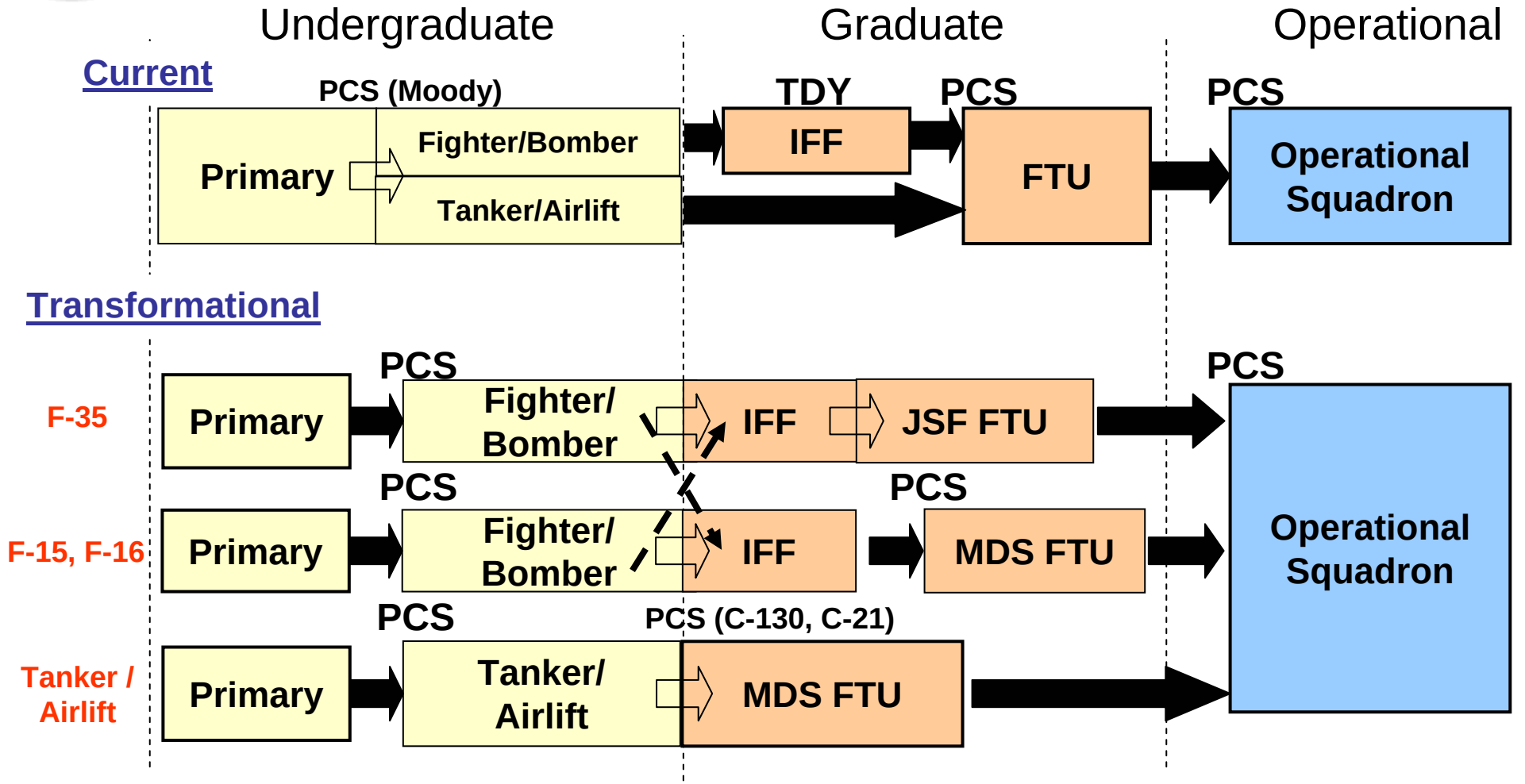

- **Transformational concept drives fewer moves for JSF**
- **Cross flow between JSF and Legacy Fighter will require additional move**
- **Potential to save TDY move to IFF**

Production Loss

- ***"AETC estimates implementation of most scenarios will result in a 1-2 year loss of production (1000-2000 pilots) spread over 2 to 4 years"***
- **Loss of student production during BRAC implementation is a valid concern**
  - **Scenario implements changes in one year**
  - **Phased implementation may mitigate production loss**