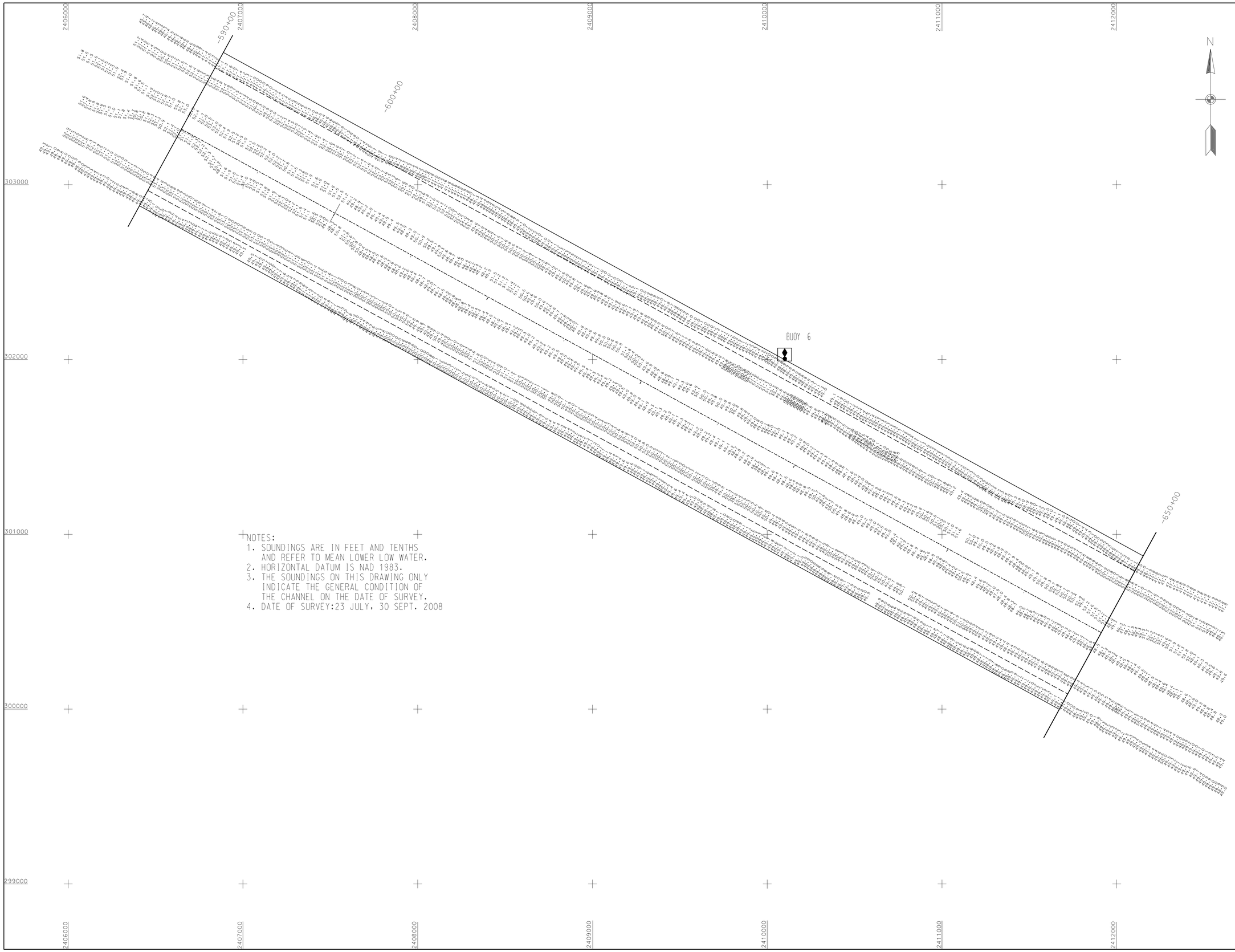

NOTES:
1. SOUNDINGS ARE IN FEET AND TENTHS AND REFER TO MEAN LOWER LOW WATER.
2. HORIZONTAL DATUM IS NAD 1983.
3. THE SOUNDINGS ON THIS DRAWING ONLY INDICATE THE GENERAL CONDITION OF THE CHANNEL ON THE DATE OF SURVEY.
4. DATE OF SURVEY:23 JULY, 30 SEPT. 2008

US Army Corps of Engineers
Charleston District

MARK	DESCRIPTION	DATE	APPRV.

MARK	DESCRIPTION	DATE	APPRV.

U.S. ARMY ENGINEER DISTRICT
CORPS OF ENGINEERS
CHARLESTON, SOUTH CAROLINA

Designed by:
Drawn by: MRV
Ckd by:
Reviewed by:
Submitted by:
Date: OCT. 08
Rev:
Design file no. 9230
Drawing Code:
File name:
Plot date:
Dwg scale: 1" = 200'

CHARLESTON HARBOR
CHARLESTON ENTRANCE CHANNEL
9230
CHARLESTON COUNTY SOUTH CAROLINA

SHEET REFERENCE NUMBER
SHEET 6 OF 16