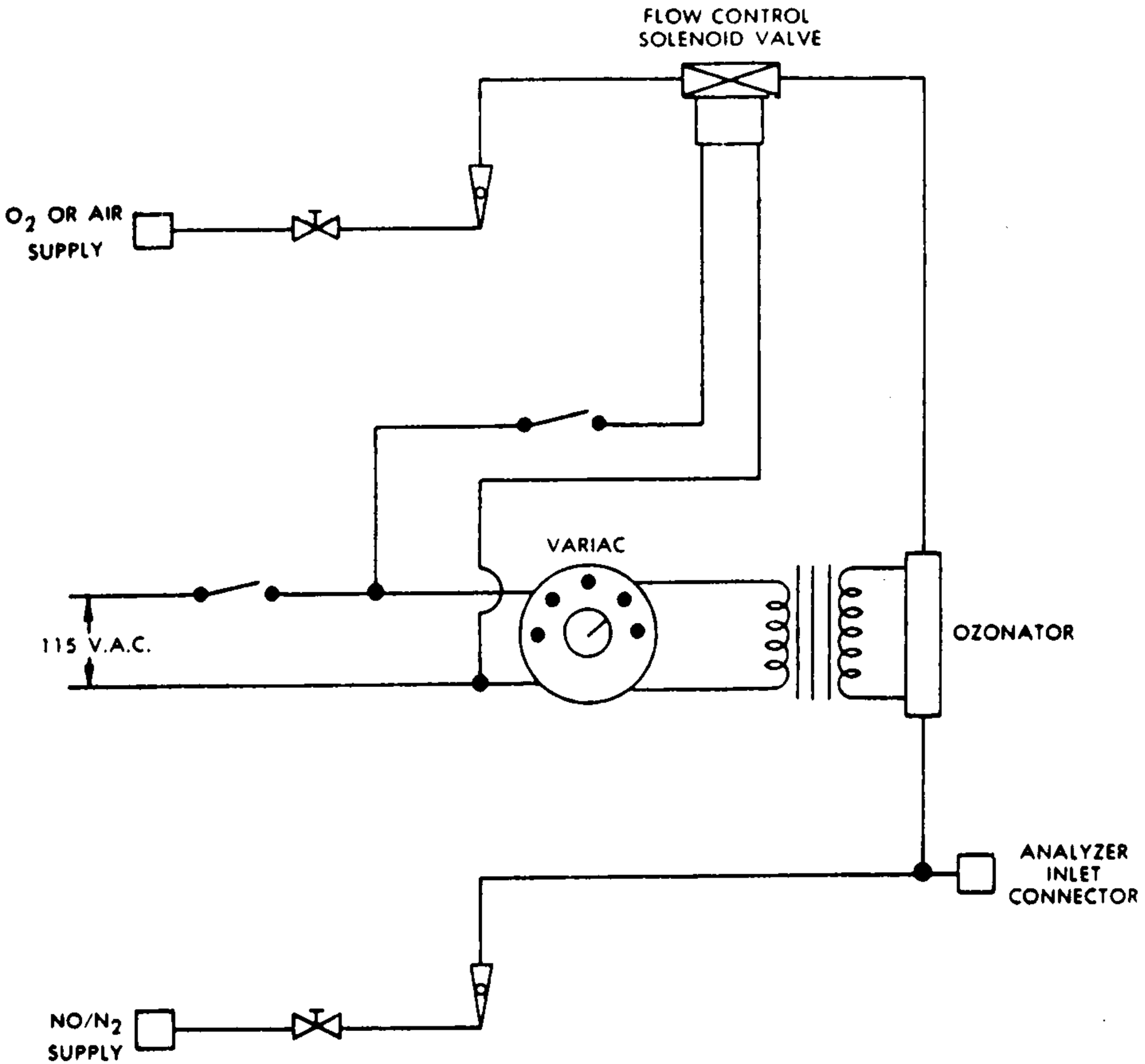

(SEE FIG F78-3 FOR SYMBOL LEGEND)

FIGURE F78-8—NOx CONVERTER EFFICIENCY DETECTOR