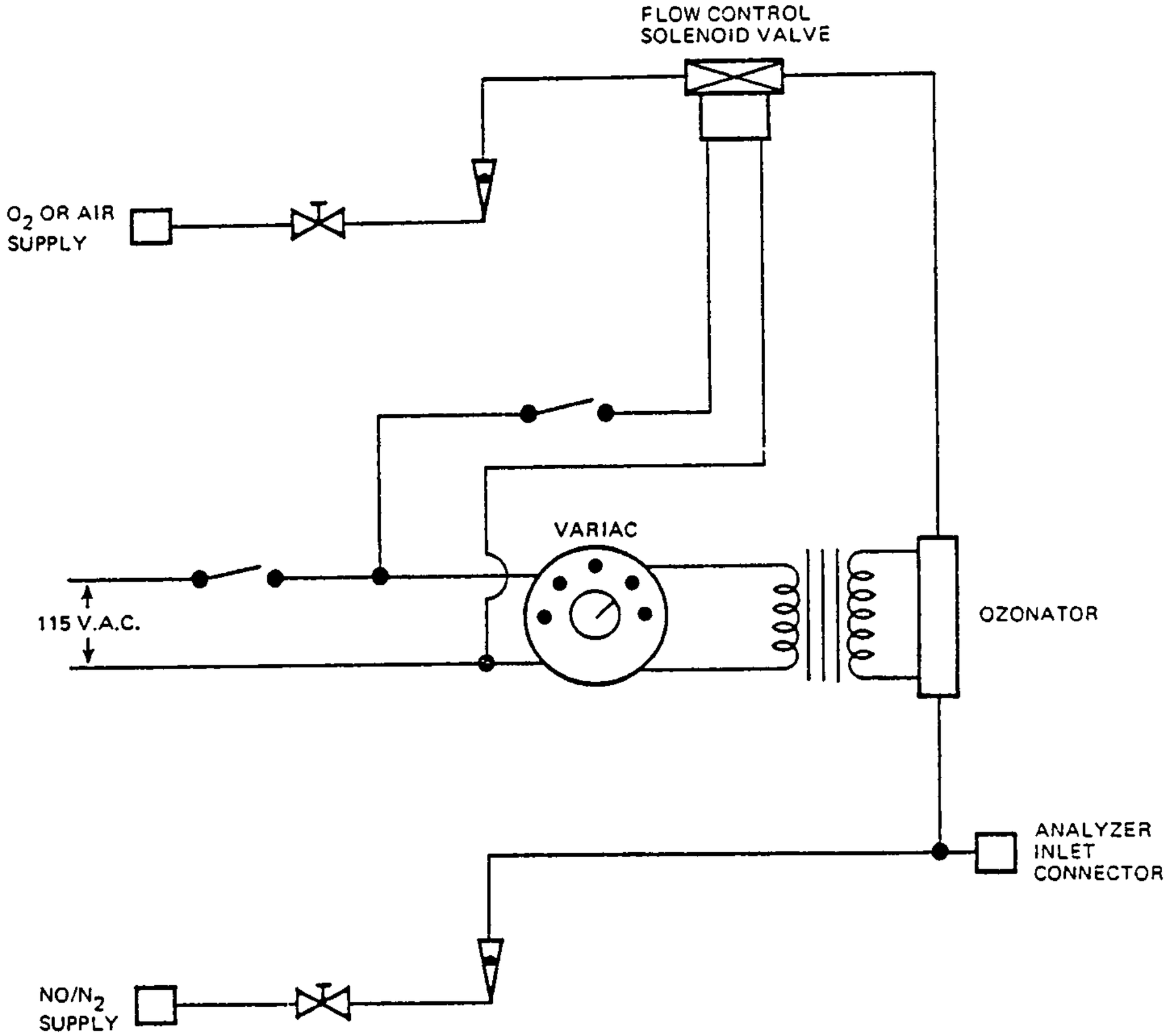

FIGURE D79-4 NO_x CONVERTER EFFICIENCY DETECTOR