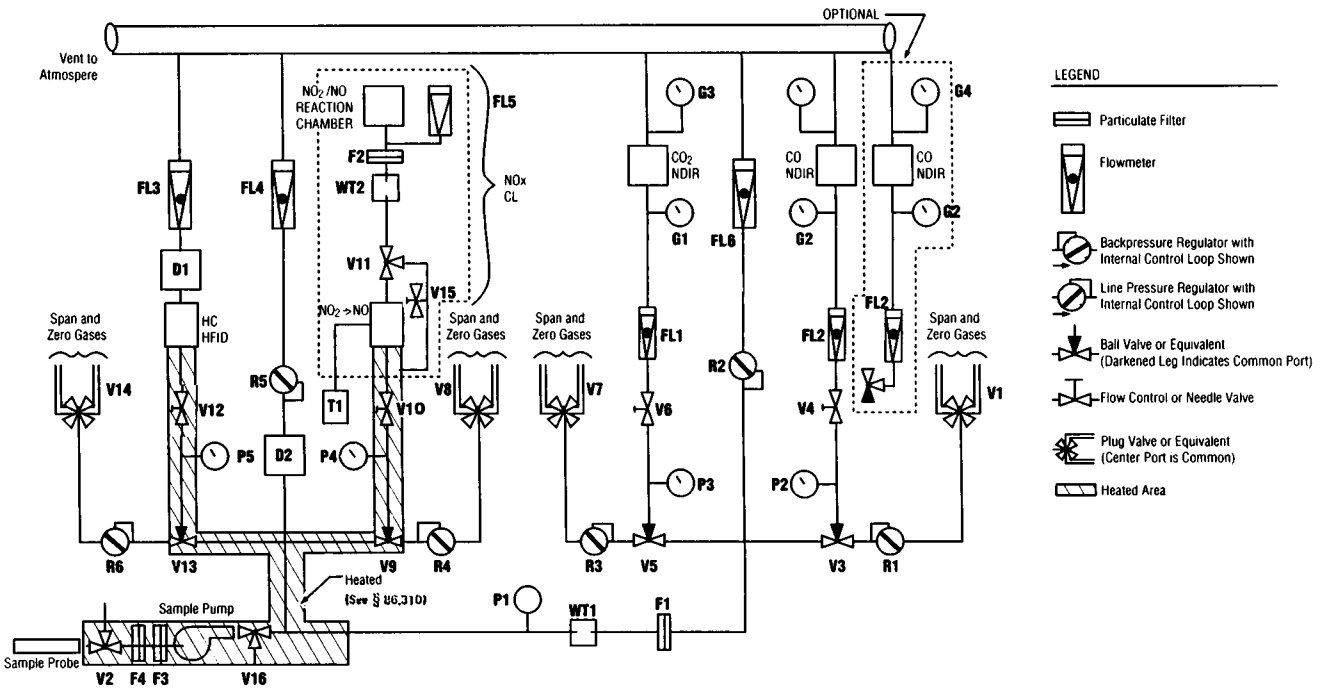

Figure D79-1 HEAVY-DUTY EXHAUST GAS SAMPLING AND ANALYTICAL TRAIN