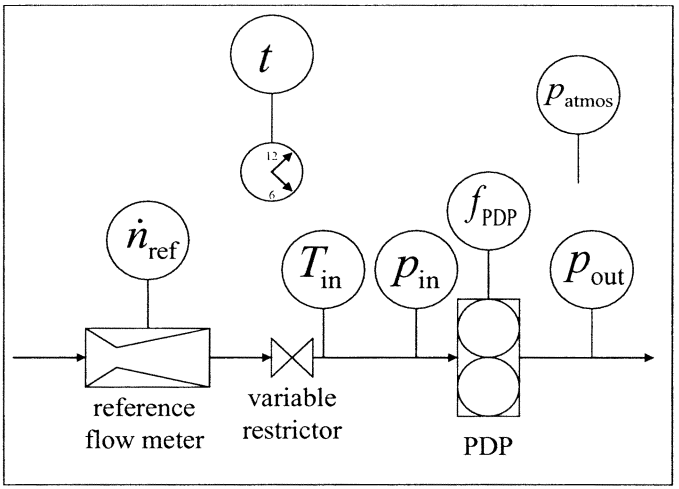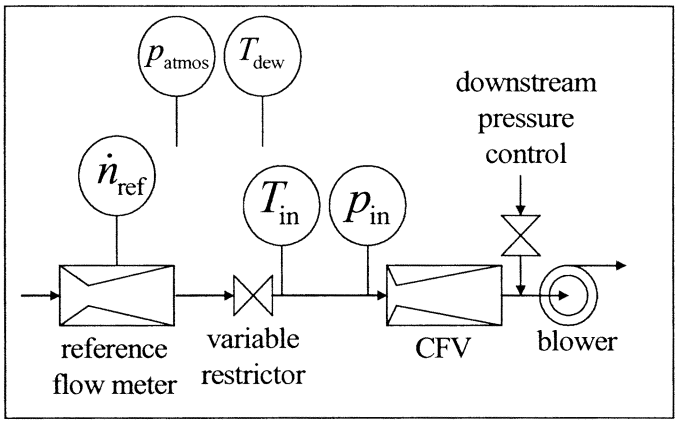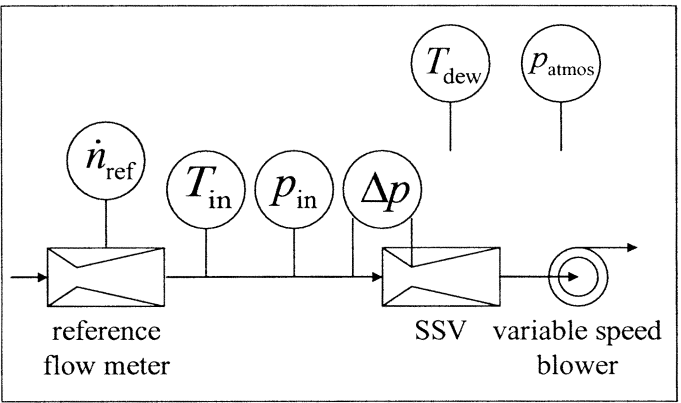Figure 1 of 1065.340 CVS calibration configurations.