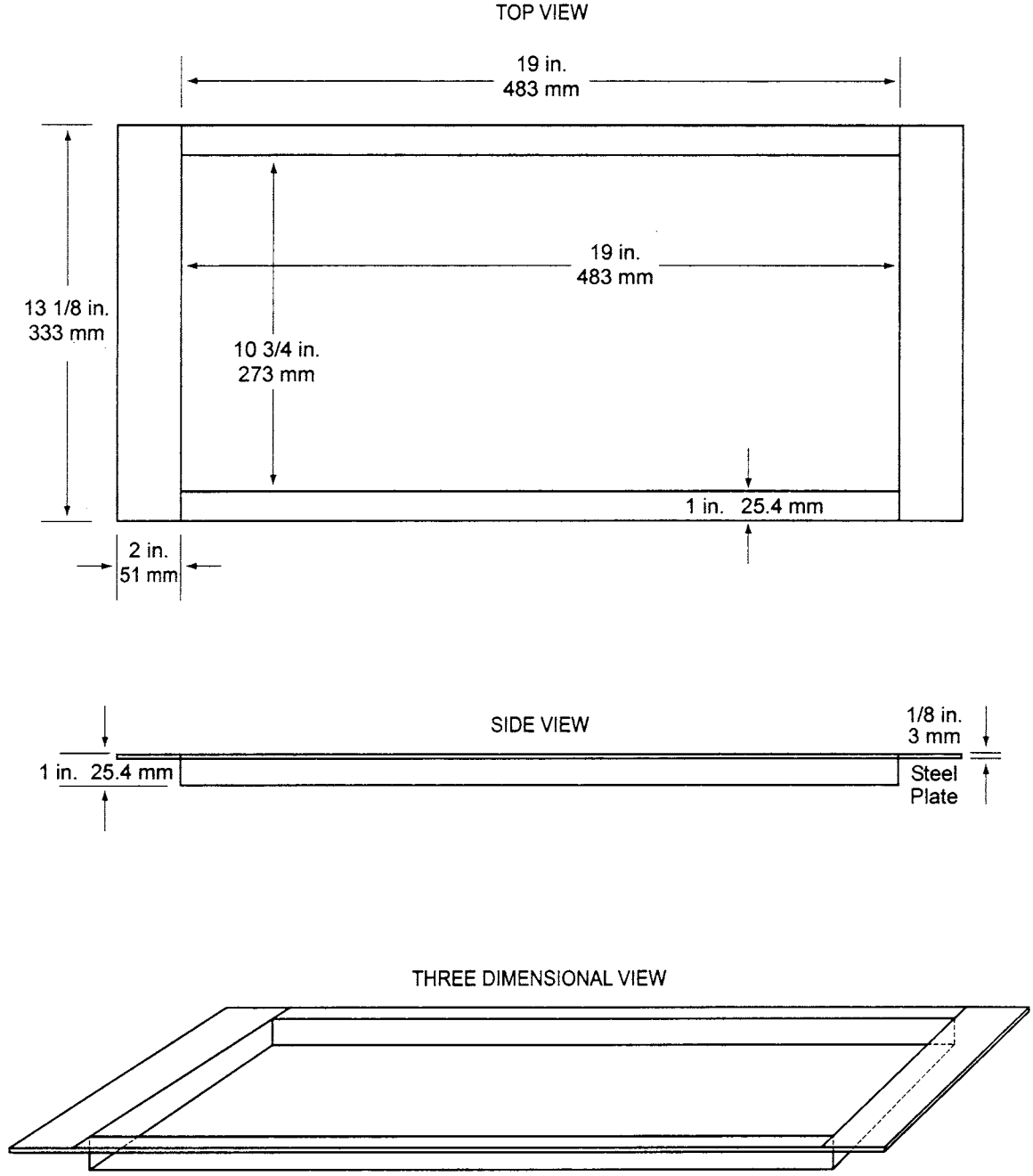

Figure 5: 3 views