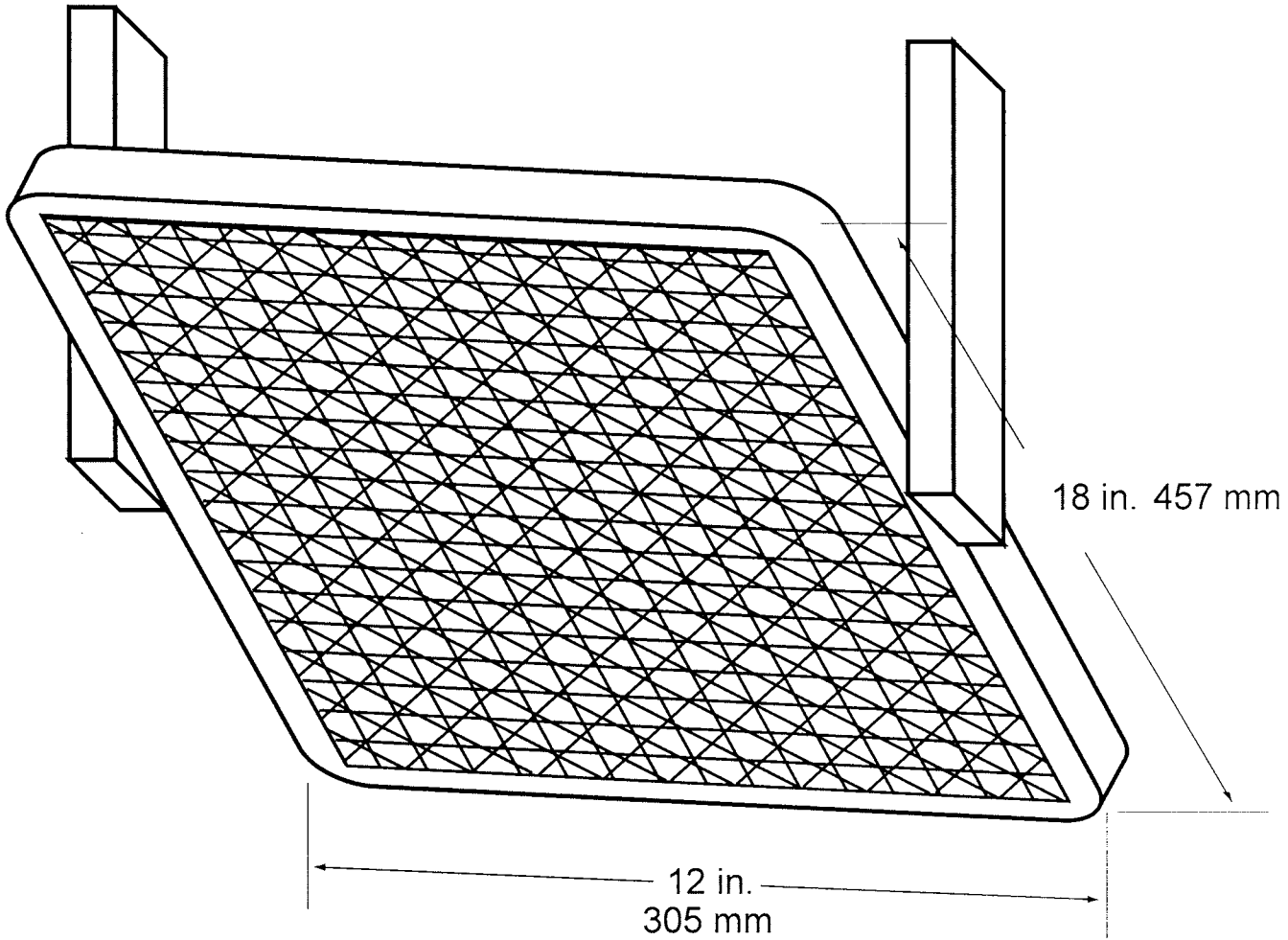

Figure 3b – Air Propane Radiant Panel