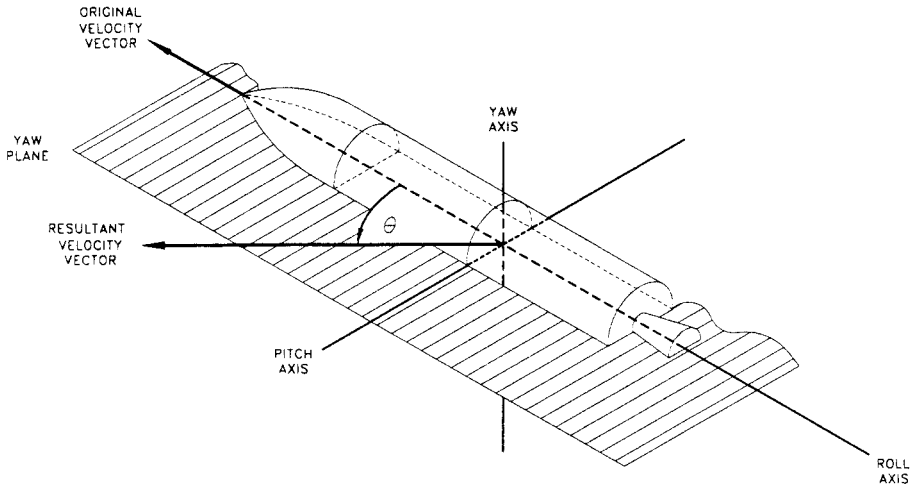

Figure B-2: Velocity Vector Turn Angle in Yaw Plane