REG	STATE	PROJECT	SHEET NO.	TOTAL SHEETS
SE	TN	FOOT 8DI		

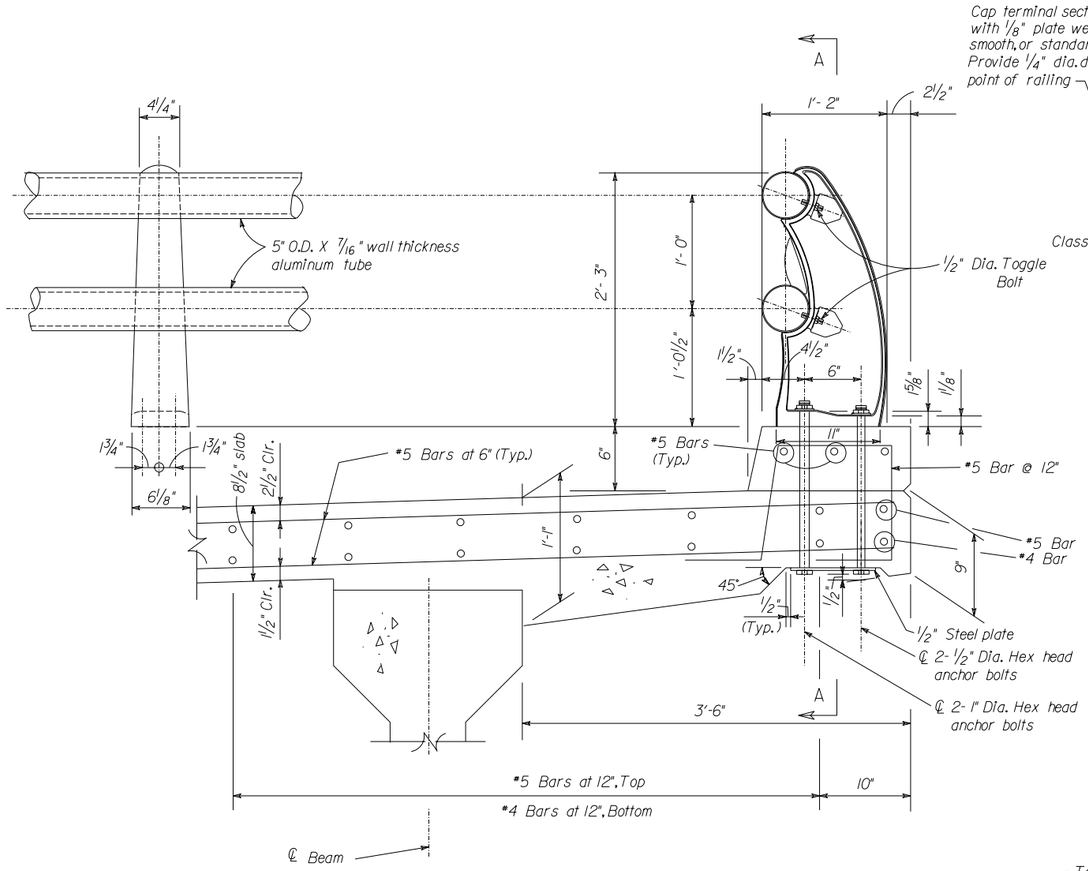

POST AND DECK SLAB DETAILS
NO SCALE

Cap terminal sections of railing with 1/8" plate welded and ground smooth, or standard end plug. Provide 1/4" dia. drain hole at low point of railing

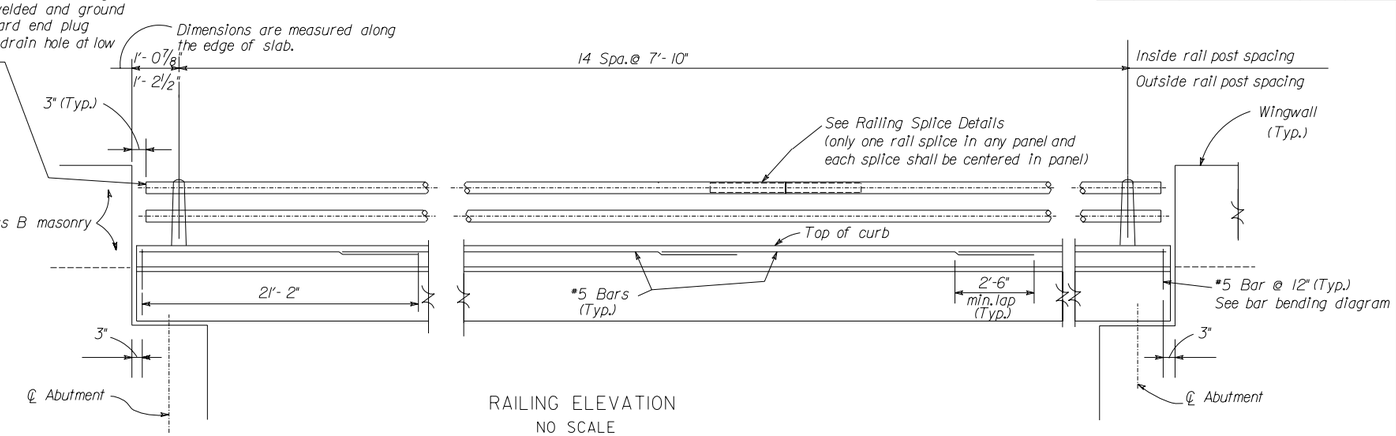

RAILING ELEVATION
NO SCALE

Note:
Apply a layer of heavy grease to the full length of the anchor bolts; preventing bond between the concrete and the bolt and allowing for future replacement of the bolts.

Post And Railing Notes

1. Posts shall be permanent mold cast aluminum ASTM B-108, Alloy A444 - T4.
2. Railing and rail splices shall be aluminum extruded tube ASTM B-221, Alloy 6061 - T6
3. Anchor and toggle bolts shall be steel conforming to ASTM A 276 Type 302, 304 or 316. Hex nuts, and washers shall be steel conforming to ASTM F594, Alloy 304.
4. Steel anchor plates shall conform to ASTM A 36.
5. Aluminum surfaces in contact with concrete shall be coated with aluminum caulking compound - Fed. Spe. TT - C - 589, Grade 1. Preformed fabric pads (t= 1/8") may be used as an alternate.
6. Provide aluminum shims as required for alignment of posts. Set post normal to grade. Railing splices shall be located at 1/8 points ± 4".
7. The post furnished may deviate slightly from the configuration shown, except for height, in order that an available commercial casting may be used. The casting used must conform with the requirements of the design specifications and must be submitted to the engineer for approval prior to being fabricated.
8. Railing to be continuous over 3 or more posts.
9. Rails on curved alignment shall be shop bent to the required radius.
10. All exposed surfaces of post and rail shall have a field applied No.60 grit sandblasted finish.

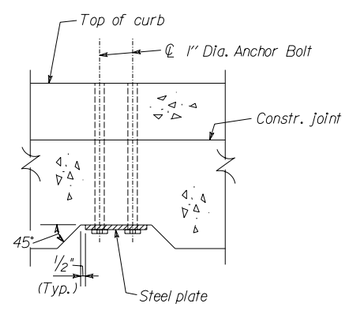

SECTION A-A
(Reinf. steel, rail and post are not shown)
NO SCALE

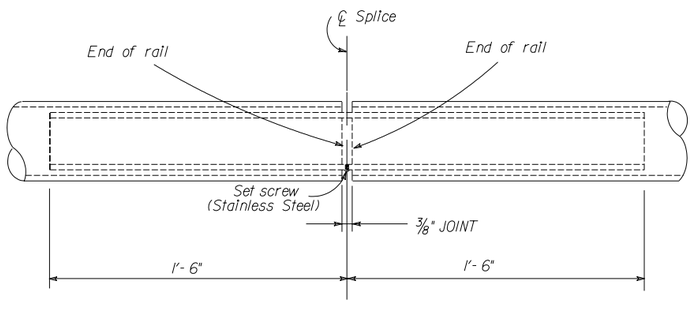

RAILING SPLICE DETAIL
NO SCALE

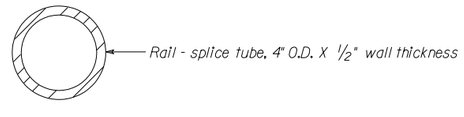

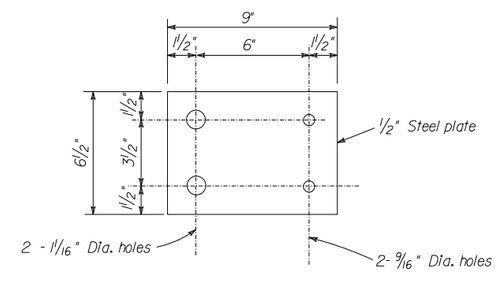

ANCHOR PLATE DETAIL
SCALE: 3"= 1'- 0"

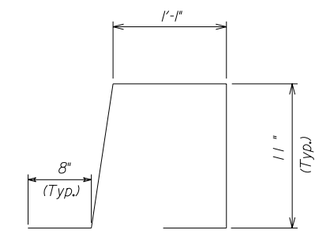

BAR BENDING DIAGRAM

DEPARTMENT OF TRANSPORTATION
FEDERAL HIGHWAY ADMINISTRATION
EASTERN FEDERAL LANDS HIGHWAY DIVISION
FOOTHILLS PARKWAY

RAIL DETAILS

DESIGNED BY	DRAWN BY	CHECKED BY	SQUAD LEADER	DATE July 1989	G -
			Shoukry Elnahal	SCALE As shown	Br. Dwg. No. of

3/27/2003 7:47:51 AM M:\udan\WEB\Foothills\CADD\Fpar3.dgn

$$$$$$$$$$dgn$$$$$$$$$$