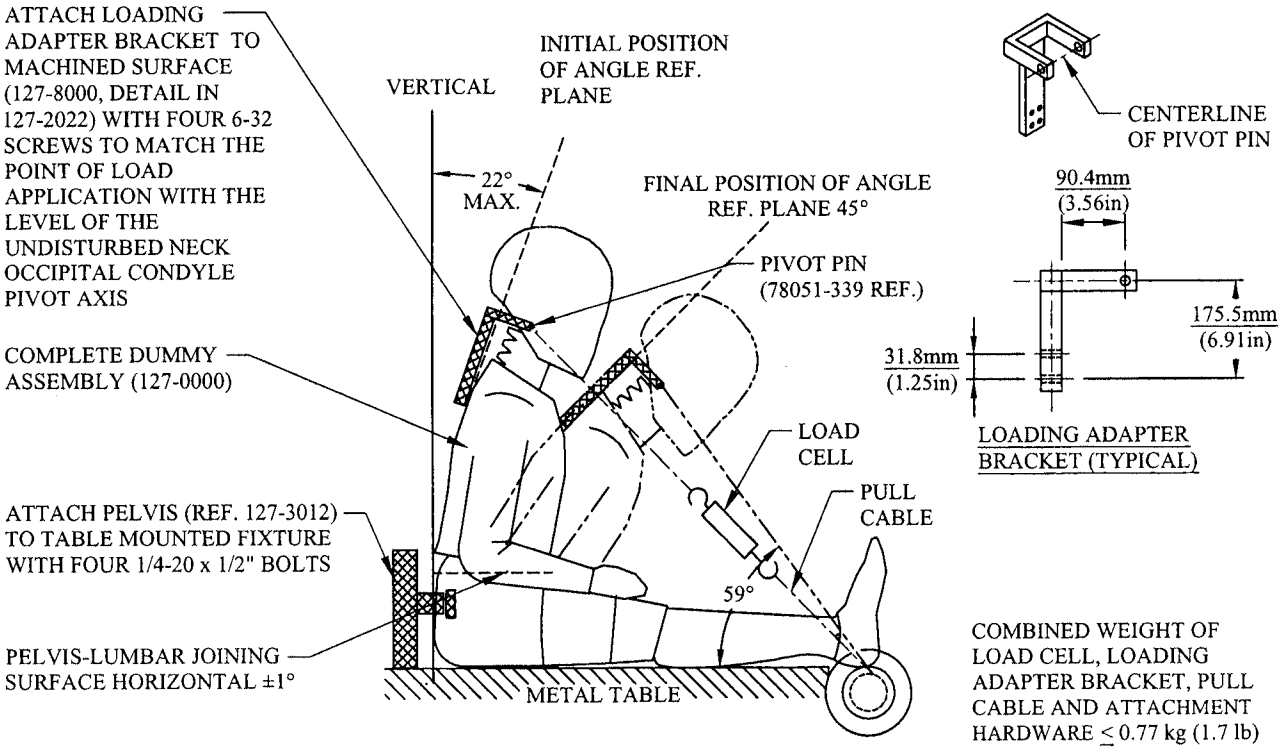FIGURE N 5
TORSO FLEXION TEST SET-UP SPECIFICATIONS