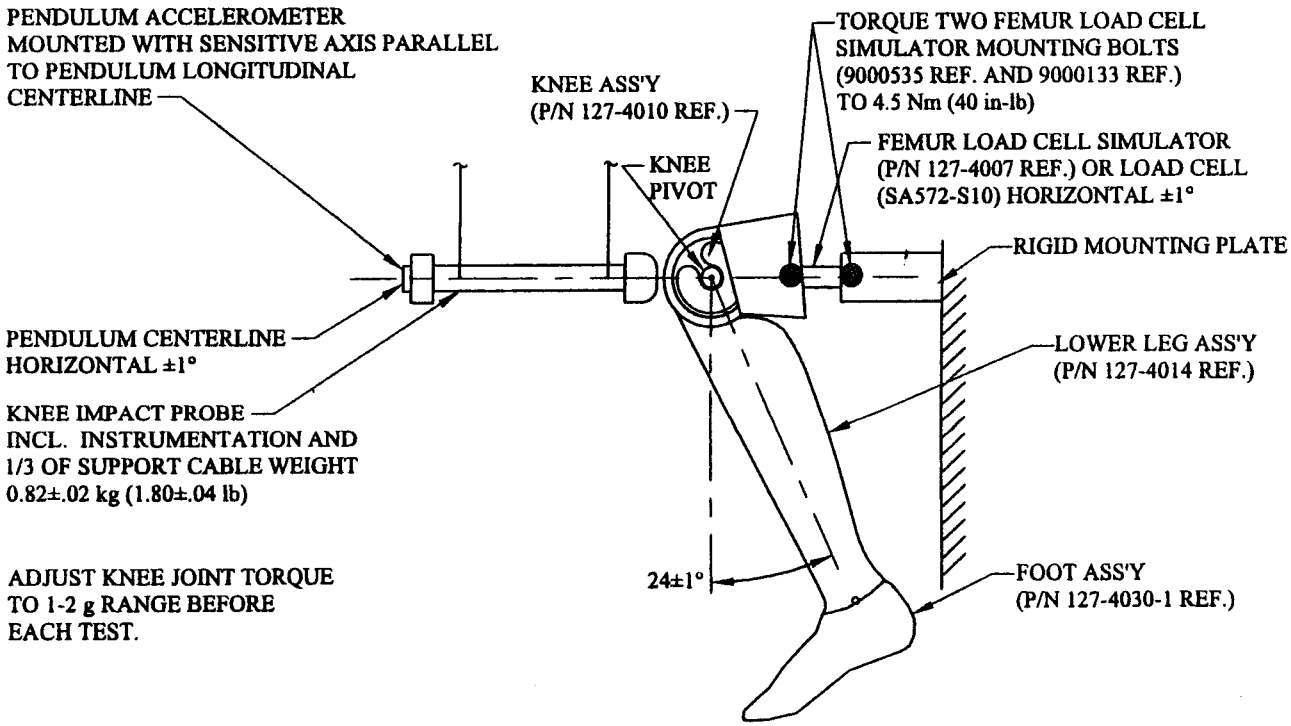FIGURE N 6
KNEE IMPACT TEST SET-UP SPECIFICATIONS