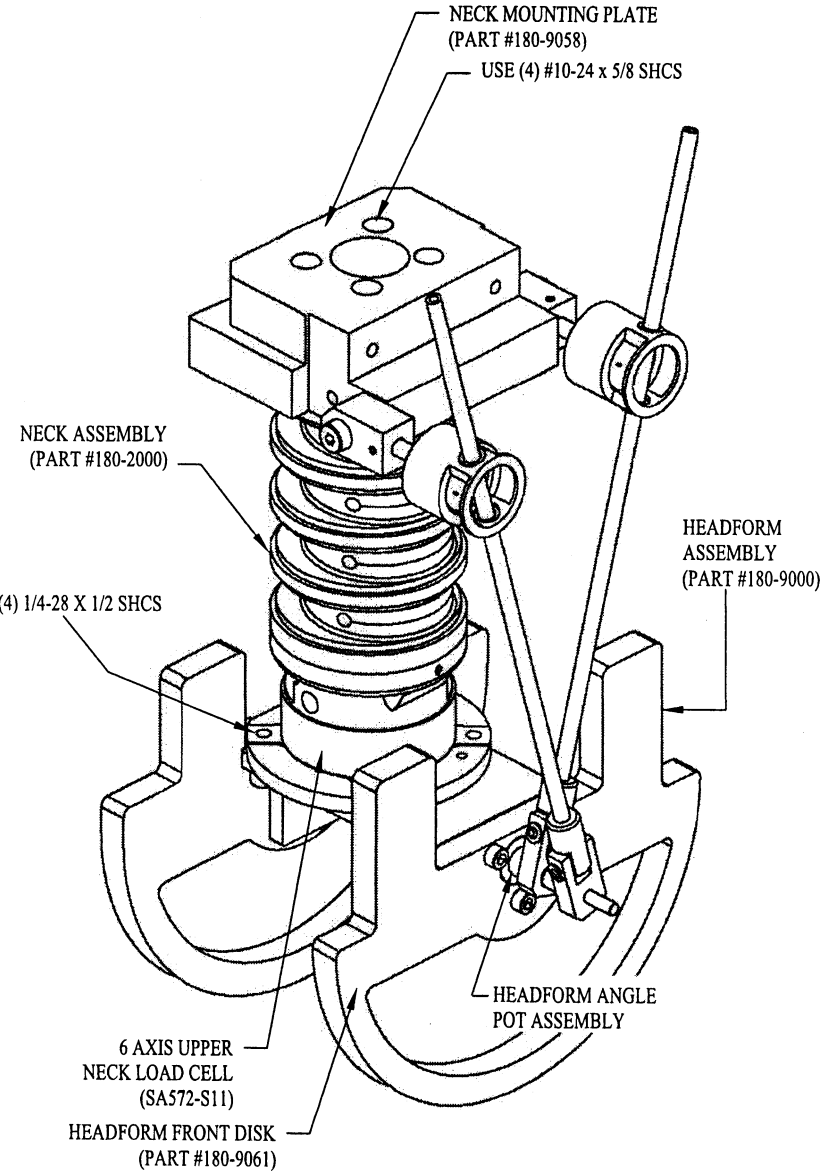FIGURE V1
NECK ATTACHED TO HEADFORM ASSEMBLY