FIGURE 22
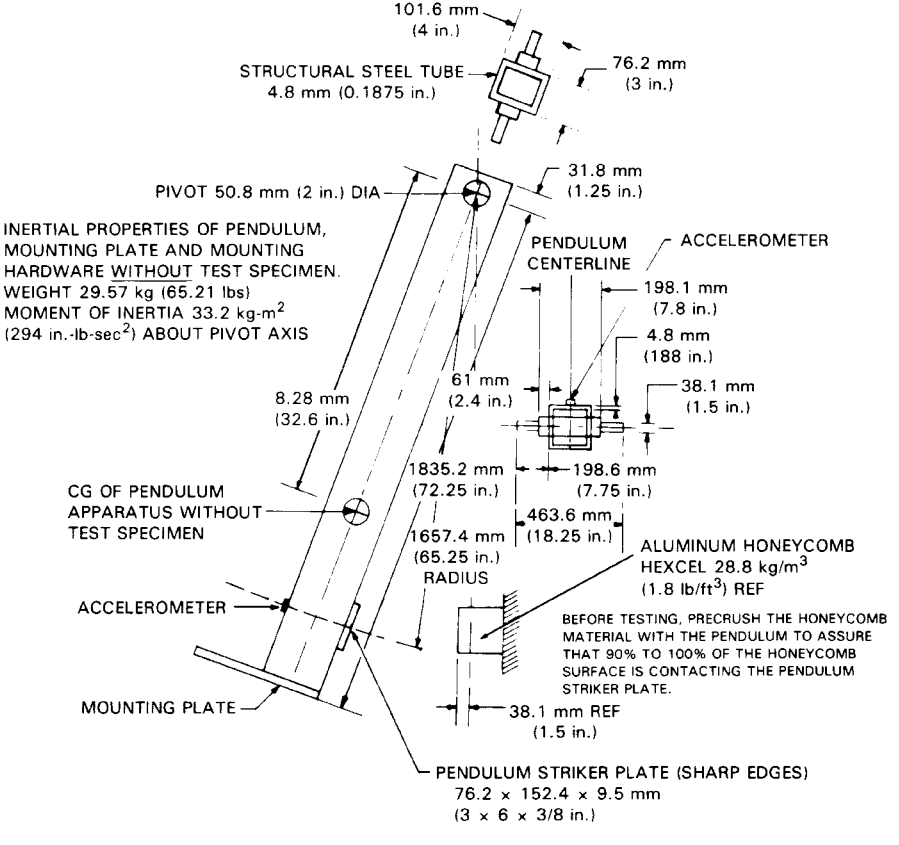
PENDULUM SPECIFICATIONS