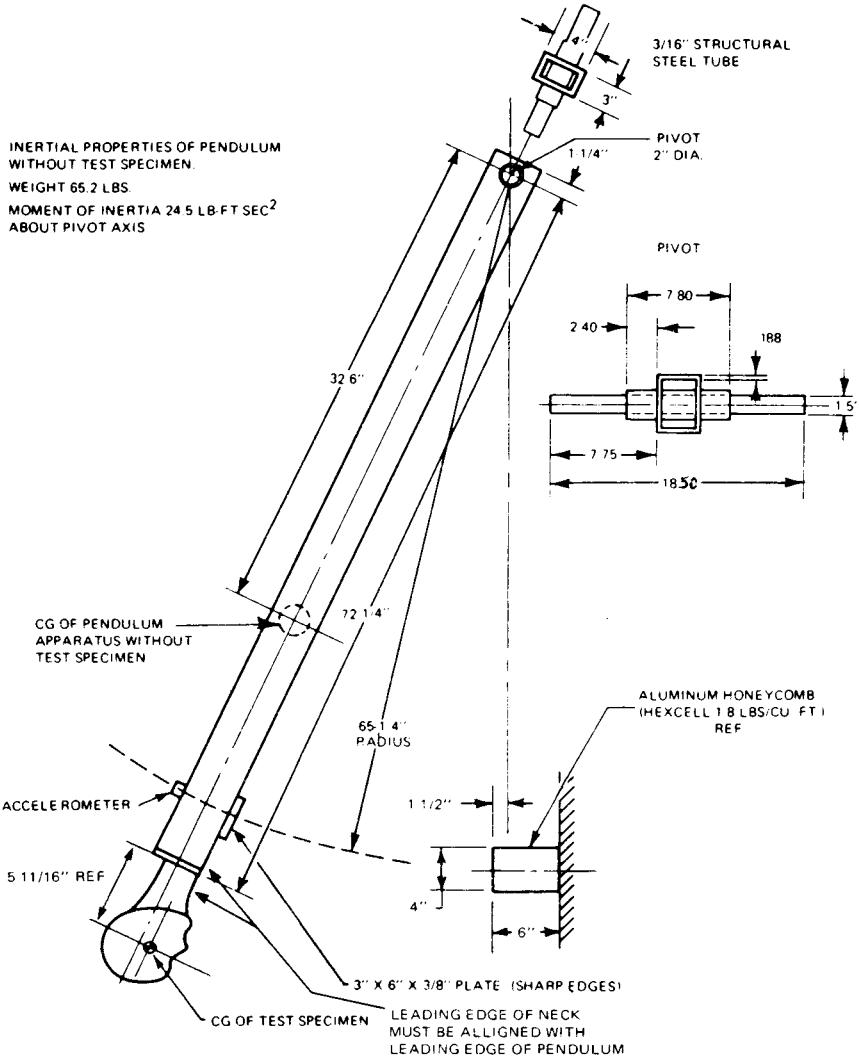

FIGURE NO. 15

NECK COMPONENT TEST