REG	STATE	PROJECT	SHEET NO.	TOTAL SHEETS

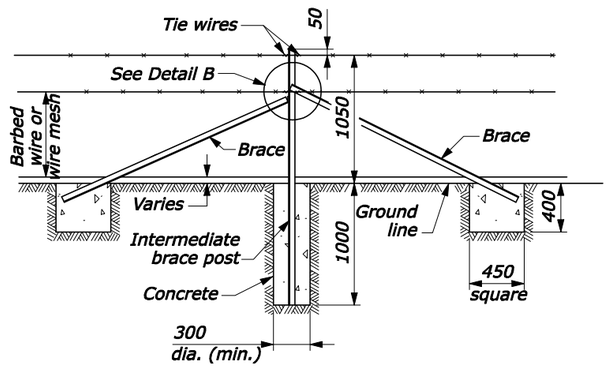

INTERMEDIATE BRACING

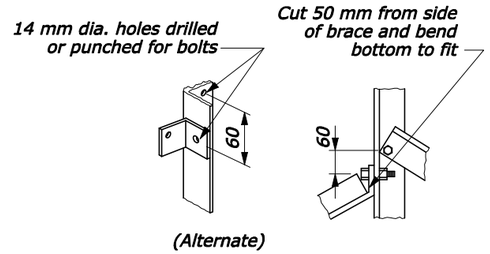

DETAIL B

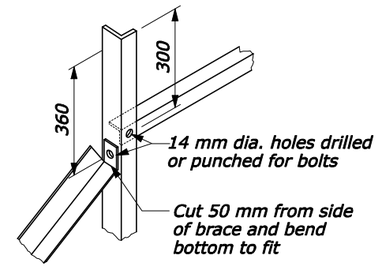

DETAIL A

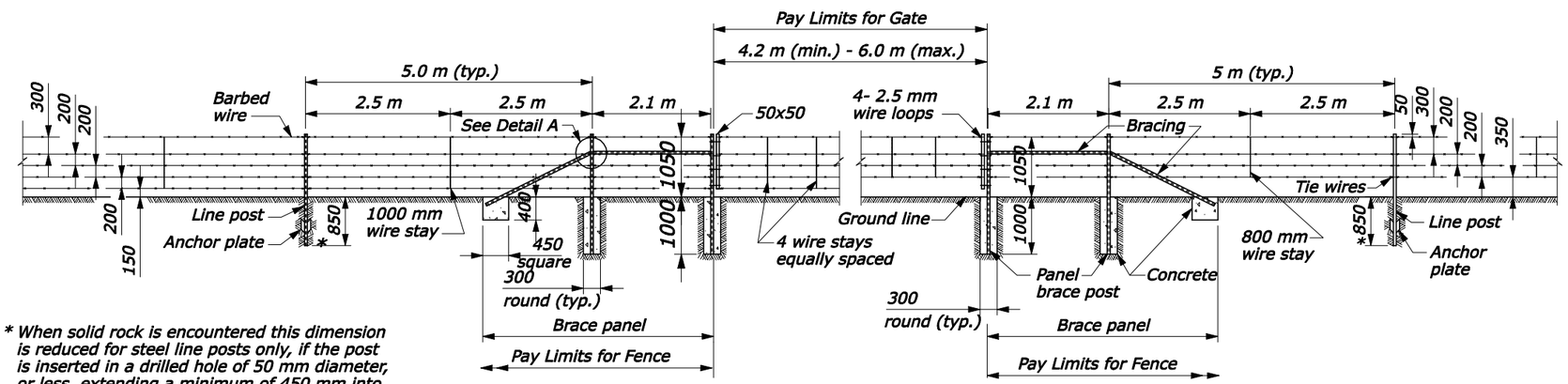

TYPE A **WIRE GATE** **TYPE B**

(5 STRAND BARBED WIRE) (4 STRAND BARBED WIRE)

* When solid rock is encountered this dimension is reduced for steel line posts only, if the post is inserted in a drilled hole of 50 mm diameter, or less, extending a minimum of 450 mm into the rock. Unless the drilled hole is a friction fit backfill the post with grout or vibratory compacted sand up to the level of the rock surface after the post is in place. Corner posts, brace posts and terminal posts must be embedded full depth in any case.

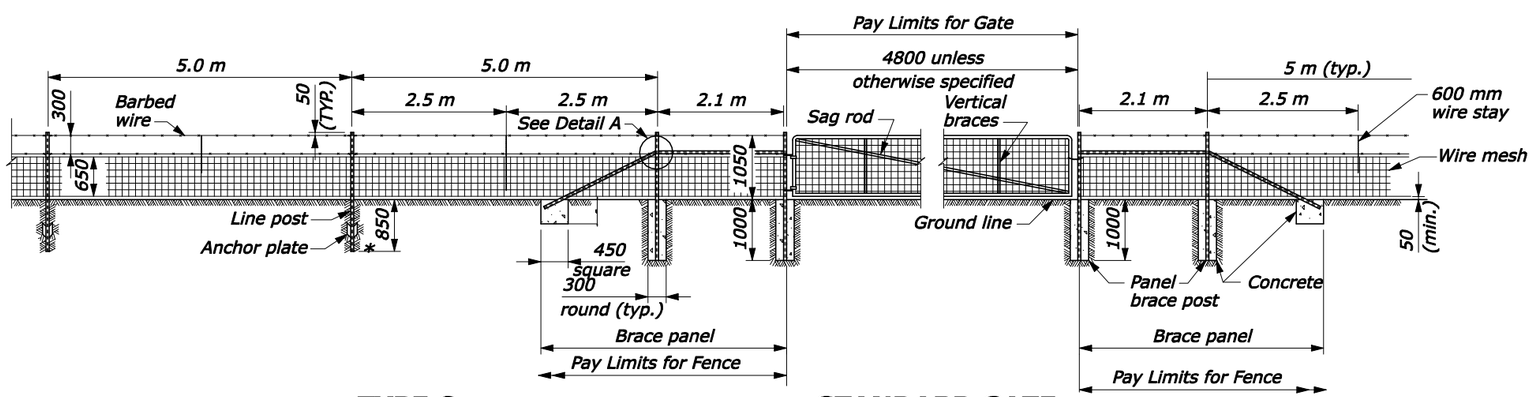

TYPE C
(COMBINATION)

STANDARD GATE
(For use with all types of fences)

NOTE:

1. Provide panel brace posts and intermediate brace posts that are 64x64x6.4 mm steel angle sections, 2.1 m in length, weighing not less than 5.80 kg/m. Line posts are steel "Tee" sections, 1950 mm in length, weighing not less than 1.93 kg/m, and have an anchor plate sufficient to resist movement. Braces are 51x51x6.4 mm steel angle sections, 2.1 m in length, weighing not less than 4.46 kg/m.
2. All posts and braces have a weather resistant green, baked-enamel finish which is also resistant to the shock of driving operations. White paint on the top portion of the posts is optional.
3. Line posts with studded face will be acceptable in lieu of drilled or punched holes.
4. Brace panels will be placed at all corners, ends, intersections, and gates. Brace panels will also be placed at all changes in alignment and grade in excess of 20°. Intermediate bracing will be placed at uniform intervals of not more than 200 m. In addition to brace panel adjacent to the standard gate, an intermediate brace will be placed 10 m each side of the gate bracing, except where another brace panel exists within 50 m of the gate and gate bracing.
5. Barbed wire conforms to ASTM A 121, Class I, and has two strands of 2.5 mm galvanized wire, twisted, having two point, double wrap, 2 mm round barbs maximum of 100 mm apart. Minimum net weight will be 0.08 kg/m.
6. Wire mesh fabric conforms to ASTM A 116, Class I. Fabric is 650 mm wide, consisting of 7 horizontal wires with vertical cross wires spaced 150 mm apart. The top and bottom wires are 3.4 mm galvanized and the intermediate wire and vertical wires are 2.5 mm galvanized.
7. Wire stays are double strand, twisted, 3.6 mm galvanized. Tie wires are a minimum of 3.6 mm galvanized. Every strand of barbed wire and every other horizontal strand of woven wire mesh fabric is tied to each post according to standard practice.
8. Hardware for attaching braces to posts are M12 x 25 mm galvanized machine bolts and nuts.
9. Concrete conforms to Section 601. Completely cure concrete before wire is stretched.
10. Standard gates are 1050 mm high, consisting of28.5 mm OD galvanized steel tubular frame and vertical braces at midpoint for gates 4.2 m wide or less. Two vertical braces at third points are required for gates over 4.2 m wide. Woven wire mesh is as specified above, except that cross wires may be either a 50 mm or 100 mm spacing: or alternatively, chain link fabric can be used. Gates have adjustable hinges and a diagonal, adjustable 9.5 mm galvanized steel sag rod. The latch is a chain with a closeable hook on one end, tack welded to the post. All fittings are galvanized.
11. Dimensions not labeled are in millimeters.

NO SCALE

U.S. DEPARTMENT OF TRANSPORTATION
FEDERAL HIGHWAY ADMINISTRATION
CENTRAL FEDERAL LANDS HIGHWAY DIVISION

METRIC DETAIL

WIRE FENCES WITH STEEL POST (TYPE 3)

DETAIL APPROVED FOR USE 07/2004
REVISED: 08/2006 04/2008

DETAIL
CM619-50

4/2/2008 4:59:06 PM L:\DESIGN\AD2\CFL Details Team\Web Ready\4_9_08\C619-50.dgn