UC-92

SAND85-2604
Unlimited Release
March 1987

DESIGN OF THE SHELL PROJECT

SEAFLOOR EARTHQUAKE MEASUREMENT SYSTEM
(SEMS)

James P. Hickerson
Alonzo A. Lopez
Geo Systems Division
Sandia National Laboratories
Albuquerque, NM 87185

ABSTRACT

A new generation system which measures strong motion in marine sediments has been developed and deployed. The system consists of three subsystems: a seafloor data acquisition package and two shipboard packages that command and record data from the seafloor package. Communication between the two systems is via an acoustic telemetry system. The seafloor unit is powered by lithium batteries and has an operational life of four years. The seafloor unit is microprocessor controlled and uses a three-axis accelerometer package to continuously measurement sediment motions from .001 to 10 g's. These data are digitized at a 100 hertz rate and, if they meet the preestablished event selection criterion, they are stored in an eight-million bit, nonvolatile, magnetic bubble memory. In addition to recording seismic data, the shipboard subsystem can monitor the status of the seafloor package and change the operating characteristics, if necessary. The paper describes the design, development, and deployment of the Seafloor Earthquake Measurement System.

CONTENTS

LIST OF ILLUSTRATIONS

LIST OF TABLES

ACKNOWLEDGMENTS

Much of the mechanical design of the SHELL SEMS is attributable to Carl Longfellow. Carl was also responsible for its assembly and much of the mechanical testing that was done on various parts. Venito Vasquez performed much of the assembly of the electronics and was an indispensable asset to the project.

1.0 INTRODUCTION

In 1976 the U.S. Department of Energy, with the support of the U.S. Geological Survey, established the Offshore Technology Program. The objective of the program is to develop instrumentation systems which will assist government and industry to characterize the marine geotechnical environment of the outer continental shelf. One element of the program is the Seafloor Earthquake Measurement System (SEMS) Project. The objective of the SEMS is the development and demonstration of an instrumentation system capable of measuring the response of ocean floor sediments to strong motion seismic activity in remote unattended areas. The requirements for such an instrument include a long operational life, a mechanism for collection and storage of seismic data, and a reliable means of retrieval of the data. Sandia National Laboratories has previously deployed four SEMS. These units were deployed in the Santa Barbara Channel in October 1980, and operated for a period of one year.[1]

The purpose of this report is to document the design and development of the SEMS that was deployed off Long Beach, California. This unit (herein called the SHELL SEMS) was developed as part of an agreement between the Department of Energy and SHELL Development Company of Houston, Texas.[2] Sandia acted as the technical representative for the Department of Energy (DOE), providing management and technical support for all phases of the project (herein call the SHELL Project).

The SHELL SEMS was originally conceived as a prototype SEMS that would demonstrate design features thought to be necessary for units destined for the Aleutian Shelf and southern Bering Sea. At the time of its conception, it was believed that the next major SEMS project would be in this region.[3] Underlying technologies and system requirements had changed considerably since the last SEMS was deployed in the Santa Barbara Channel. Included in these changes was a need for longer system life, larger memory capacity, and implementation of a remote installation technique. Because of the high deployment cost, a system with an extended operational life is essential. The larger memory capacity implies less frequent interrogations of the system - an advantage in the harsh Arctic climate. A remote installation technique is necessary in the severe rough seas and the increased deployment depths. A Bering Sea unit was needed to reflect these changes, and the SHELL Project was to be used to test new design and emplacement concepts. In addition, the SHELL Project had merit in that it provided the opportunity to monitor the seabed close to existing offshore oil platforms that possessed seismic sensors on deck and underwater on the platform legs.[4] This gave a unique opportunity to collect soil response data that could later be related to the response of an actual offshore structure.

In May 1984, design of the SHELL SEMS began. Final assembly and testing of the unit was completed in April of 1985. Installation was performed on May 15, 1985, in 235 feet of water at a site ten miles offshore Long Beach in the Beta field, as given by the coordinates:

Latitude	:	33° 35' 13" north
Longitude	:	118° 07' 22" west

In the sections that follow, the design features of the SHELL SEMS are presented and discussed. Appendix C contains a detailed description of the SEMS deployment.

2.0 SHELL SEMS SYSTEM DESCRIPTION

2.1 SHELL SEMS ELECTRICAL SYSTEM DESCRIPTION

2.1.1 Overview

The SEMS is designed to measure strong motion seismic data from remote ocean floor sites. The major attributes of the system include:

1. Low power consumption for extended system life;
2. Broad, dynamic range-sensing capability;
3. Efficient use of limited data storage capacity; and
4. Remote, unattended operation of the system.

Low power consumption is achieved by the use of CMOS technology and other low power components wherever possible. A nonvolatile magnetic bubble memory (MBM) is used for long-term data storage and requires a significant amount of power, is activated only when required. The MBM has the advantage that it can be deenergized for long periods of time without loss or degradation of the stored data, thereby minimizing power.

The SEMS uses low power accelerometers and measures acceleration levels from .001 to 10.0 g's* and frequencies from .2 to 20 Hz in three axis.

A sophisticated data-gathering and storage algorithm which is part of the microprocessor software efficiently uses the limited storage capacity of the MBM to store the seismic data.

The SEMS employs a seafloor package that communicates via an acoustic telemetry data link and enables remote data collection from the surface.[4] The SEMS concept is illustrated in Figure 2-1.

---

* g's (free fall, standard) X980.655 = Gals

Figure 2-1. The SEMS Concept

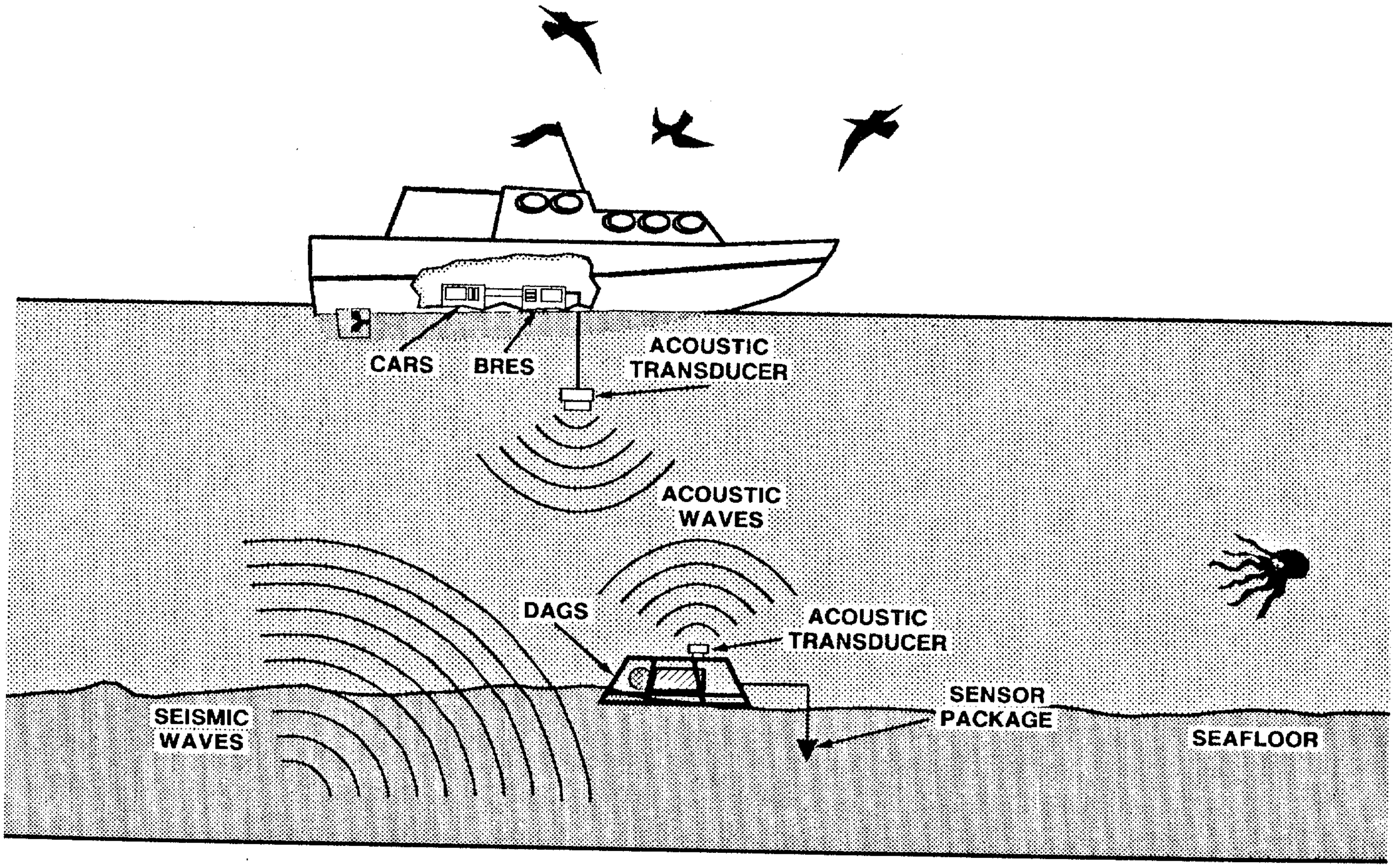

The SHELL SEMS consists of three subsystems:

1. The seafloor package, called the Data Gathering System (DAGS). DAGS gathers data from a probe which contains the seismic sensors and a dual axis magnetometer.

2. The Command and Recording System (CARS), a portable shipboard unit that provides operator interface with the DAGS. CARS records the data sent from DAGS on a digital cassette tape recorder for later analysis.

3. The Buoy Repeater Station (BRES), a portable acoustic transmitter/receiver station used with CARS, takes commands from CARS and relays them to DAGS via the acoustic telemetry link. It receives data from DAGS and transfers them to CARS via an RS-232 serial digital interface.

All three subsystems have a similar design structure. These subsystems are controlled by similar microcomputers and use many identical boards. This use of identical PC boards makes the system much easier to build and check out. The following sections describe the functions of each subsystem and the electronic hardware used to implement these functions. Whenever a type of board is referred to by its name, that board will be the same no matter which system uses it. The only exception to this rule is the memory board. The memory board in CARS has more programmable read-only memory (PROM) than read/write memory (RAM), whereas the BRES and DAGS memory have more RAM than PROM. The software controlling the microprocessor are different for each system and define how each system responds to and processes commands.

The acoustic telemetry system, being identical in BRES and in DAGS, is described in a separate section.

2.1.2 DAGS System Description

The DAGS has three basic functions:

1. Communicate with the shipboard CARS;
2. Gather seismic data; and
3. Perform a command sent from CARS.

The primary function of DAGS is the collection of seismic data. A probe connected electrically to the DAGS, but physically isolated from it, contains a three-axis accelerometer package. The accelerometers are Endevco Model 7751-500 with the specifications of the accelerometer listed in Table 2-1. The system is capable of measuring acceleration levels between .001 g to 10 g's with a flat response from .2 Hz to 20 Hz. The accelerometers are sampled at 100 times per second and low pass filtered to avoid aliasing. Each data sample is then processed to achieve maximum signal resolution and eliminate errors introduced by the electronics.

The seismic data are then digitized and placed in temporary memory. This memory is used to hold data while a determination is made whether the data should be saved or discarded. Short-term and long-term running averages of the seismic data are calculated and used to define the strength of the seismic activity. Since the mass memory capacity is limited, certain criteria have been implemented in the software to determine whether a given block of data should be retained. When these criteria are met, the data are transferred from the temporary memory to a more permanent memory - the magnetic bubble memory (MBM). The MBM is used as a mass storage device because its nonvolatile nature permits it to be turned off without loss of stored data. Although it requires a substantial amount of power, the MBM is activated only on data transfer. The MBM has a storage capacity of approximately seven million bits or 1,242 seconds of seismic data. The seismic data are stored in blocks with each block containing a seismic event. Software routines evaluate and compare the data currently being collected with data already held in mass storage and only the most significant data are retained. A complete description of the algorithms is included in Section 2.1.6.

DAGS interacts with the shipboard units in an unambiguous manner through the acoustic telemetry link. Fail-safe provisions in software are implemented to prohibit DAGS from responding to spurious signal inputs that could wipe out the data in mass memory or cause it to enter a mode which will disable the communication link. All commands received are checked for errors and validity of the command. Any abnormality in the command string forces the command to be ignored.

DAGS can, on command from the surface, monitor certain system parameters, such as battery voltage, and transmit the information to the surface. The seismic data stored in mass memory is also transmitted to the surface upon command. Normally the operator requests a summary of the data stored in mass memory and then decides which data are of interest. The data are then transmitted by DAGS in small blocks. The size of the blocks is chosen to send as much information as possible yet maintain a low transmission error rate. Parity error checking is done by BRES and if an error in transmission is detected, DAGS is automatically commanded to retransmit that particular data block.

The probe mentioned earlier also contains a dual-axis magnetometer, Schonstedt Model SAM-72C-NB, that is used to determine the horizontal orientation of the probe package after placement in the seafloor. The magnetometer is sampled only upon command from the surface and has a sensitivity of ±300 mgauss.

A block diagram of the DAGS electronics is shown in Figure 2-2. The center of the diagram is the central processing unit (CPU) board which contains the microprocessor and the serial interface (UART) which interfaces to the acoustic telemetry receiver and transmitter.

A memory board with 8,192 bytes of PROM for software program storage and 24,576 bytes of RAM for data storage is connected to the CPU board.

Also connected to the CPU board is the analog-to-digital board which is diagrammed in Figure 2-3. The control and multiplexing circuitry takes

Figure 2-2. DAGS Electronic Block Diagram

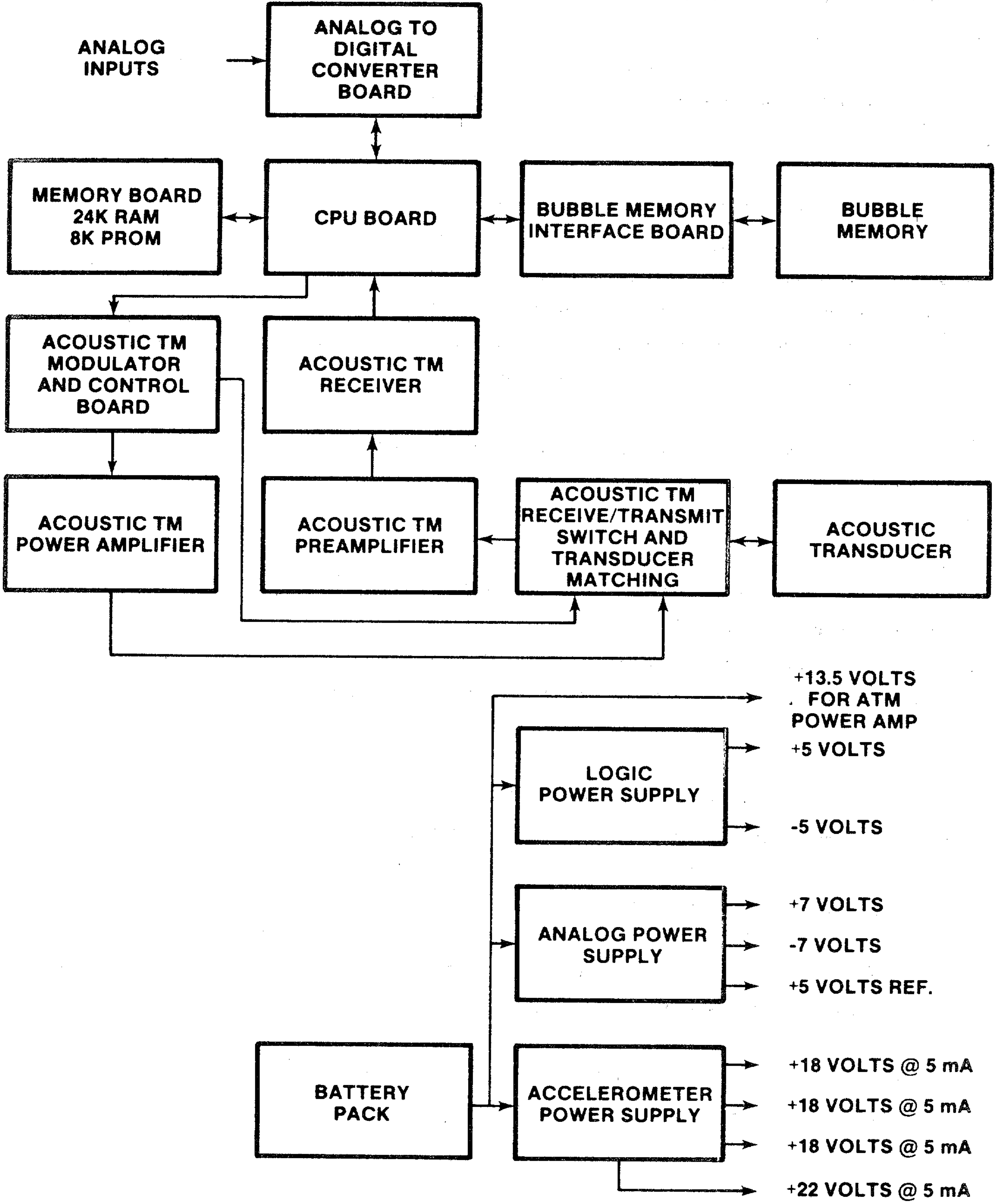

Figure 2.3. Analog Board Diagram

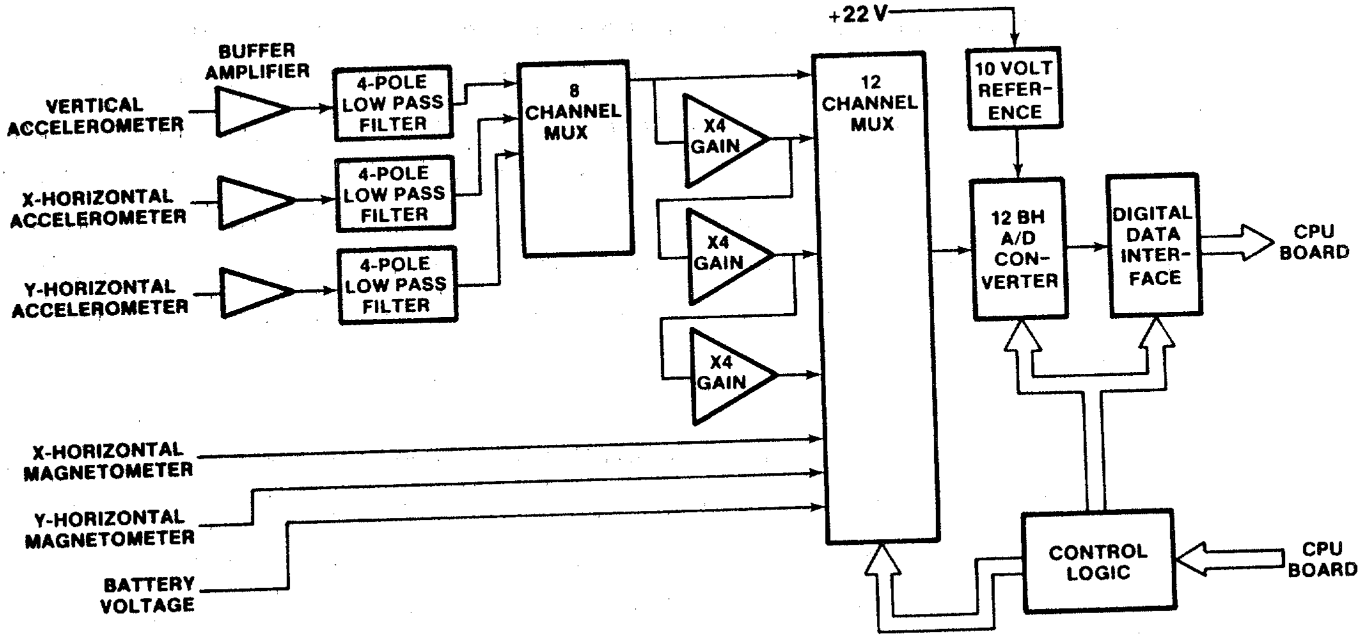

commands from the microprocessor and switches the correct gain and analog input onto the digitizer. This board contains the four pole, low-pass filters and variable gain amplifiers used on the seismic signals from the accelerometers. The analog-to-digital converter is a 12-bit device with a -5-volt to +5-volt input range. The analog board is also used to monitor DAGS parameters such as battery voltage and reference voltage. These monitors are not necessary for the system's operation but are used for diagnostic purposes. The two-axis Schonstedt Model SAM-72C-NB magnetometer located with the accelerometers is also monitored from this board.

The MBM interface board allows the microprocessor to communicate with the bubble memory system. All interface circuitry including the handshaking and data translation lines are on this board. The transfer of data between the MBM and the CPU is done in a direct memory access (DMA) mode. This board also contains the circuitry that fires an explosive bolt that releases a recovery float. The Bubble Memory board contains eight Intel one-million-bit bubble memory modules (eight million bits total) that are used for mass memory storage. Any number of the modules can be disabled by the command from the surface, thereby prohibiting the microprocessor from accessing that module. Due to malfunctions of one module in the SHELL SEMS, the number of modules that are used is seven.

The power supplies used in DAGS are DC-DC converters which convert the battery voltage of 8 to 14 volts to the desired voltages. These power supplies are special Sandia designed-and-built units which maximize their efficiency for the low power levels at which the system operates.

Normally the system is in the data-gathering mode with the acoustic receiver on. When a command from the surface is received, the UART interrupts the microprocessor which in turn checks the command for errors, interprets the command, and performs the requested operation. In the case of sending data to the surface package, the microprocessor turns the transmitter on and then sends the requested data. At the end of transmission, the microprocessor turns the transmitter off and returns to the listening mode. If the MBM is being accessed, the microprocessor inhibits the UART receiver from interrupting, to prevent a loss or change of the data in the MBM.

The DAGS time is set to Coordinated Universal Time (CUT) via a command from the surface unit. The time accuracy is correctable to CUT to ±100 milliseconds.

The unit is powered by 147 lithium-bromine-chloride battery packs manufactured by Electrochem Industries that yield a projected life of four years.

2.1.3 Buoy Repeater System (BRES) Description

The function of BRES is the interface between CARS and DAGS. Figure 2-4 is a block diagram of BRES. Like DAGS, BRES has a CPU board and a memory board. In addition, it contains an RS-232 serial interface board, called the UART board, and is used to communicate with CARS. Common to both BRES and DAGS is the acoustic telemetry hardware which is described in a later section.

Operationally, BRES receives a command from CARS, encodes it into the proper format with error detection information, and transmits the command to DAGS via the acoustic telemetry. It then waits for a response from DAGS, decodes and checks the received data for errors, and sends the response to CARS. If errors are detected or the DAGS fails to respond within a preset time interval, CARS is notified and sent the error information. The operating mode of the BRES can be changed by the operator via CARS. Appendix B contains a complete listing of the BRES commands. The BRES is packaged in a water-tight metal box approximately 15 by 15 by 12 inches as shown in Figure 2-5 and is powered by a standard 12 volt lead-acid battery.

2.1.4 Command and Recording System (CARS) Description

The CARS unit is the operator interface to the SEMS. Commands are input by the operator through a keyboard, decoded and sent to the appropriate subsystem. Operationally, commands for BRES or DAGS are sent to BRES, CARS waits for a response from BRES and if the response contains errors or BRES fails to respond within ten seconds, it asks BRES for a retransmission of the data. If the error occurred in the acoustic data link, BRES commands DAGS for a retransmission of the data.

Figure 2-4. BRES Electronic Block Diagram

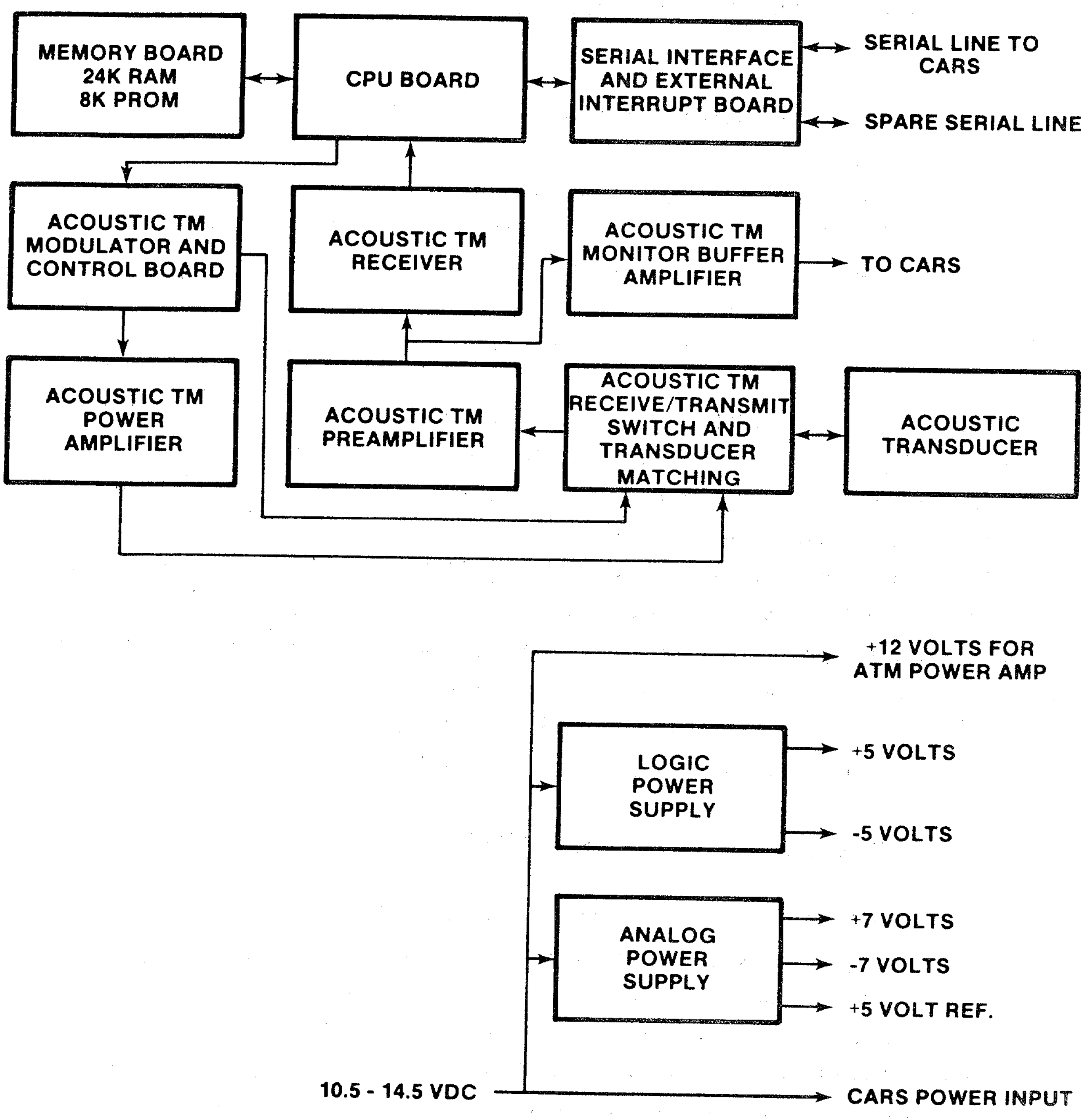

Figure 2-5. BRES Physical Package

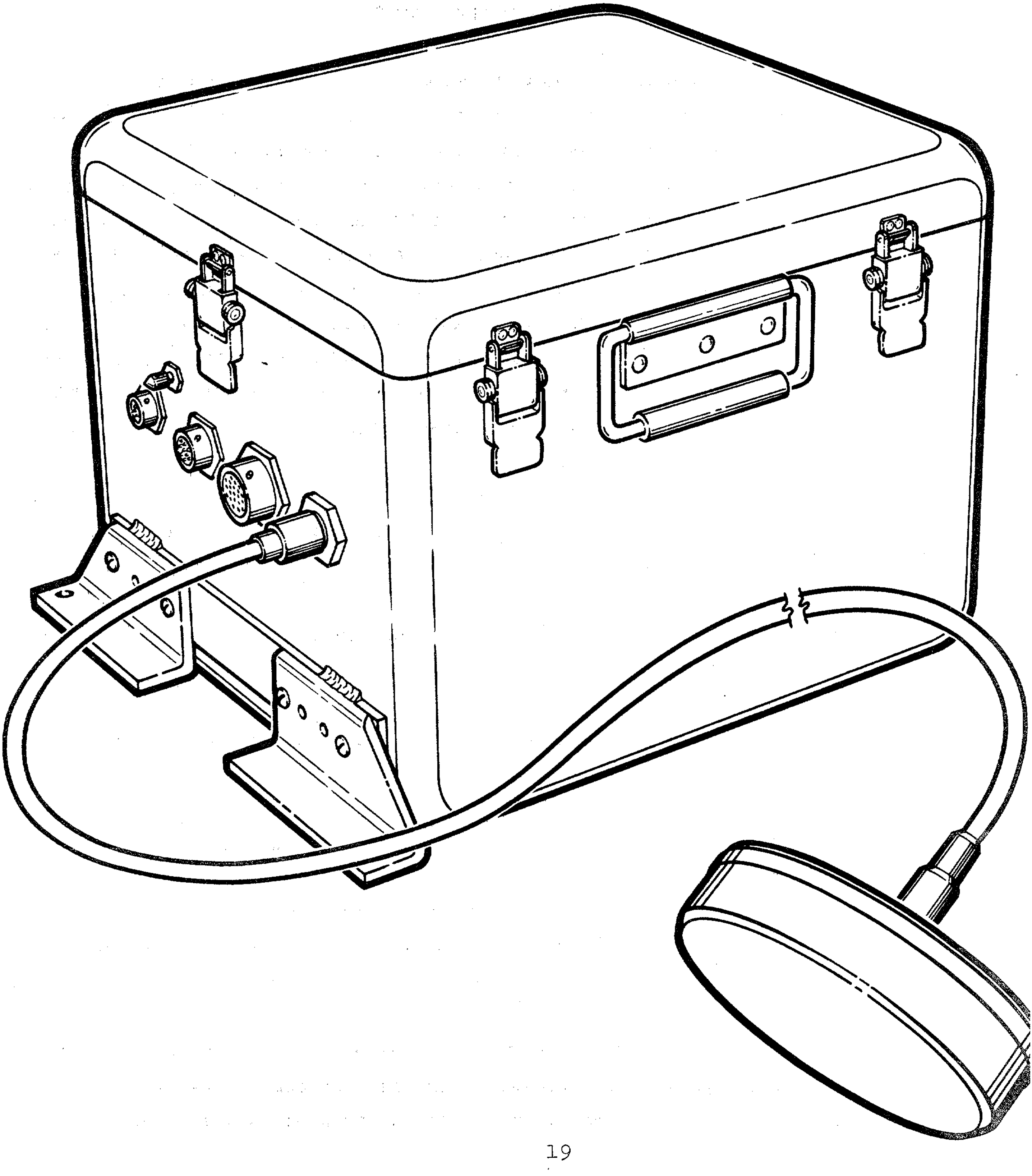

This procedure is repeated until CARS receives the data error-free, the operator intervenes, or five unsuccessful attempts have been made. Normally, the operator sets up the operating modes of CARS, such as time of day and magnetic tape recording, before attempting to communicate with DAGS. A listing of the commands is included in Appendix B.

The CARS block diagram is shown in Figure 2-6. The diagram differs from the other subsystems since its main function is to communicate with the operator and record data. As previously stated, the memory board is different than that of BRES and DAGS. The CARS memory board has less RAM and more PROM for more software storage capability. CARS is capable of holding four different software programs in its PROM. These programs are switch selectable by the operator from the front panel. In addition to the program that communicates with BRES, two other important programs are included. One is a diagnostic program that tests all the essential features of CARS and displays the results to the operator. The other program, called Mag Tape Read (MTR), transfers previously recorded data on cassette tape to a main frame computer via an RS-232 interface.

CARS uses the same CPU board as the other systems and includes the following devices:

1. A 32-character alphanumeric LCD display that tells the operator the status of the command or data.

2. A 16-key keyboard that is used by the operator to input commands or data requested by CARS.

3. A 48-column alphanumeric printer that prints a hard copy of the data.

4. A digital magnetic cassette recorder/reader that records the data received from BRES and later transfers the recorded data to another computer.

A picture of the CARS unit is shown in Figure 2-7. In operation, the commands are input through the keyboard. The microprocessor then decodes and performs the command. The command is displayed, printed, and recorded if the

Figure 2-6. CARS Electronic Block Diagram

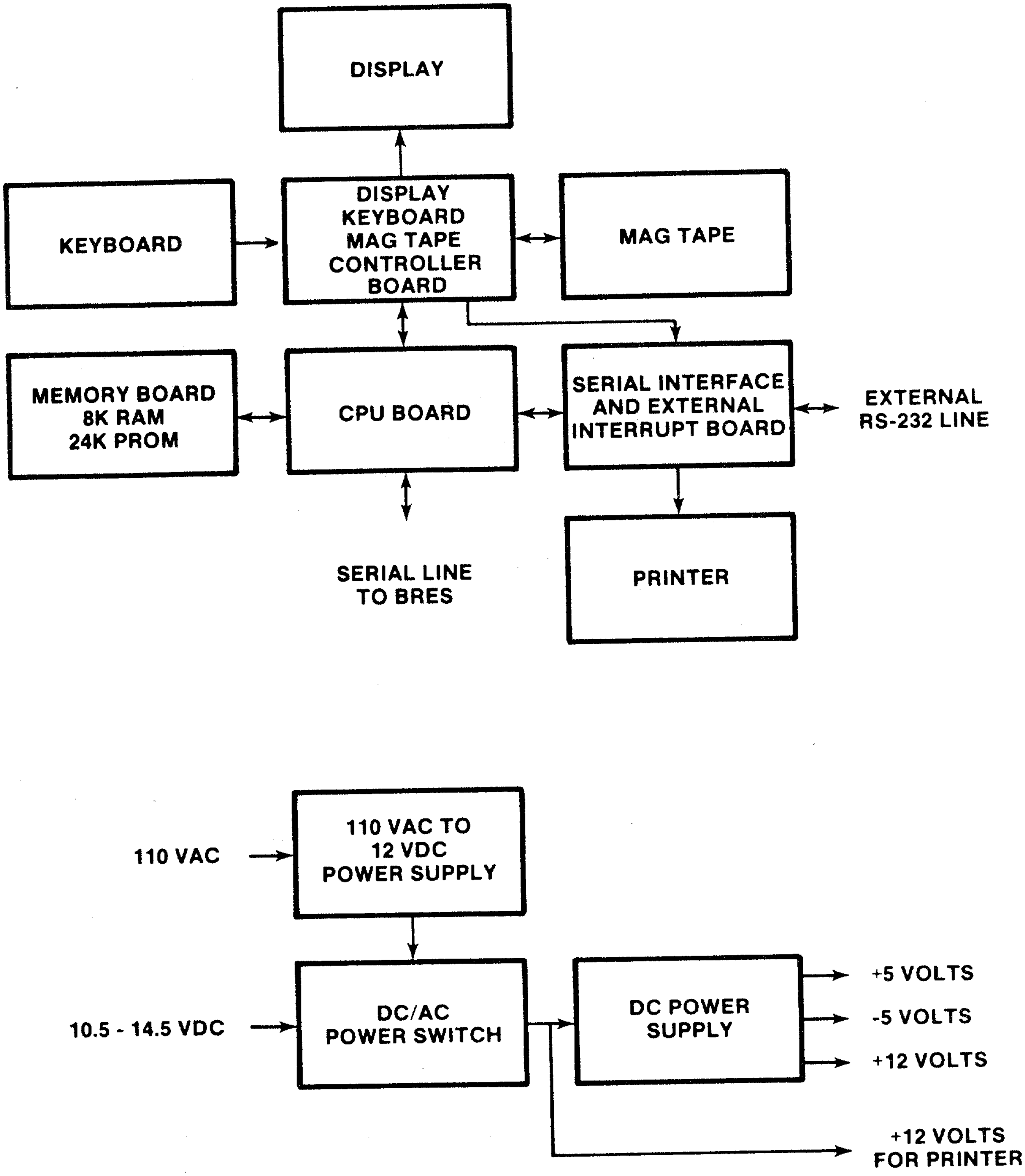

Figure 2-7. CARS Control Panel

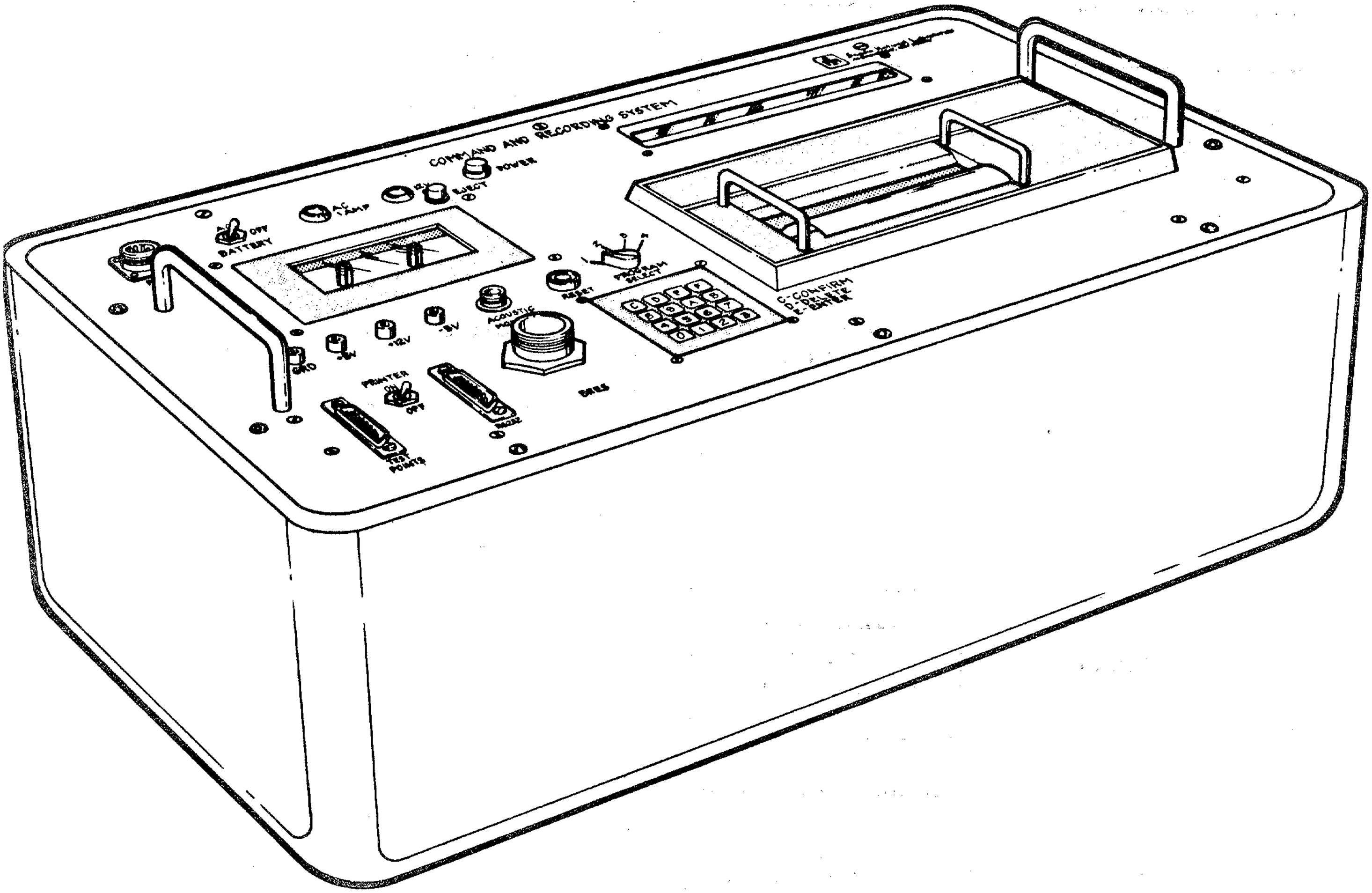

tape recorder is activated. If the command requests data from BRES or DAGS, the proper information is sent to BRES via the serial interface port and the microprocessor then waits for BRES to respond. Data from BRES are displayed, printed, and recorded along with any error information. With the versatility of the SHELL SEMS, functions other than seismic data collection are available. The operator can have DAGS transmit fixed data patterns for system checkout, change acoustic power levels and transmission data rates, set and read DAGS time, or command transmission of constant wave and amplitude modulated signals for acoustic propagation studies.

As mentioned before, CARS and BRES use the same power source, usually a marine battery, when collecting data in the field. CARS will also operate from 110 volts AC which is usually used in the laboratory when the data on cassette tape are transferred to a main frame computer for reduction and analysis.

2.1.5 Acoustic Telemetry System Description

DAGS and BRES have identical acoustic telemetry boards. The acoustic telemetry system consists of five boards and an acoustic transducer. In addition, BRES has an extra board used for monitoring the received acoustic signal with an oscilloscope. Although not required for operation, this board aids in studying the propagation behavior of the acoustic signal through the water.

The acoustic telemetry system is an improved adaptation of one used in earlier systems.[5] Two 140 degree conical beam transducers (one on the DAGS and the other on BRES) transmit data through the water. The asynchronous data are transmitted using noncoherent frequency shaft keying (FSK). The data word format consists of a start bit, eight data bits, a parity bit, and a stop bit. The data bit "one" is transmitted at 51.2 kHz and a data bit "zero" at 43.9 kHz.

The diagram of the acoustic telemetry system is shown in Figure 2-8, and the acoustic operating parameters are listed in Table 2-2. The serial digital

Figure 2-8. Acoustic Components Block Diagram

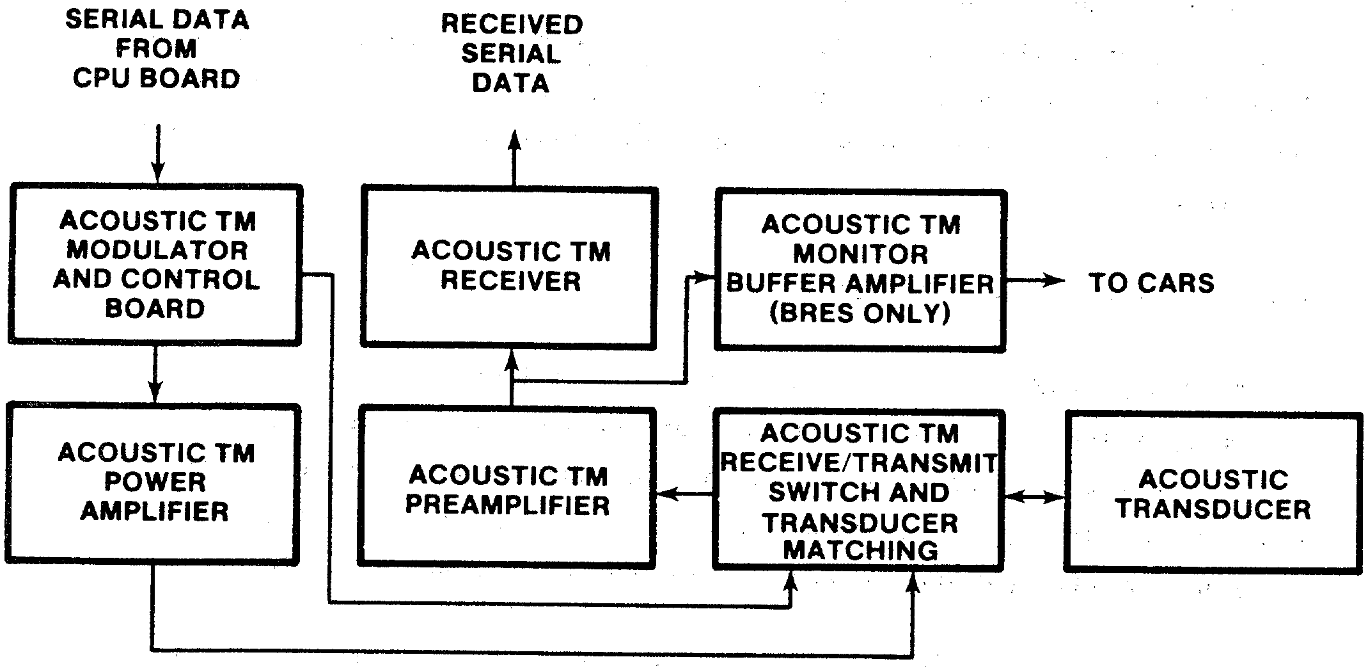

Table 2-1

Accelerometer Specifications

Sensitivity	500 mV/g
Range	±10 g full scale
Calibrated Frequency Response	0.04 to 20 Hz
Transverse Sensitivity	3 percent
Power Requirements	5 ma @ 20 volts
Shock Capability	2000 g
Resonant Frequency	11 kHz

data stream from the CPU board is fed to the acoustic modulator and control board. One function of this board is to take commands from the microprocessor and generate the control signals that operate the receive/transmit relay, and set transmit and receive bit rates. The other function of this board is to convert the serial bit stream to a low-level FSK modulated signal. Figure 2-9 shows a diagram of the modulator and the power amplifier. The modulator divides a 614.4 kHz signal by 12 and 14 to generate the two different acoustic frequencies 51.2 kHz and 43.9 kHz. The serial data stream from the CPU board is used to operate an analog switch that selects either of two frequencies. For instance, if the serial data is a zero, the 43.9 kHz signal is selected; and if the serial data is a one, the 51.2 kHz is selected. The output of the switch is fed to a bandpass filter that converts the signal from a square wave to a sine wave.

The output of the modulator is fed to the power amplifier which converts the low-level signal to a 10-watt signal relative to a 50-ohm load.

The signal then goes to the impedance matching board. This board has a transformer and inductor that are individually tuned to match the 50-ohm impedance of the power amplifier to the impedance of the acoustic transducer for optimum signal transmission at both frequencies.

Also contained in this board is the double-pole, double-throw relay that connects either the transmitter or receiver to the transducer. Since the transducer is used for both transmitting and receiving, the microprocessor, via the modulator board, switches the transmitter to the transducer.

In the receive mode, the acoustic receiver is switched to the transducer. The received signal comes in from the transducer, through the receive/transmit switch and on to the acoustic preamplifier. Note that the system cannot transmit and receive simultaneously. In addition, the receive signal does not go through the matching circuitry. Figure 2-10 shows the diagram of the receiver.

Figure 2-9. Acoustic Transmitter Block Diagram

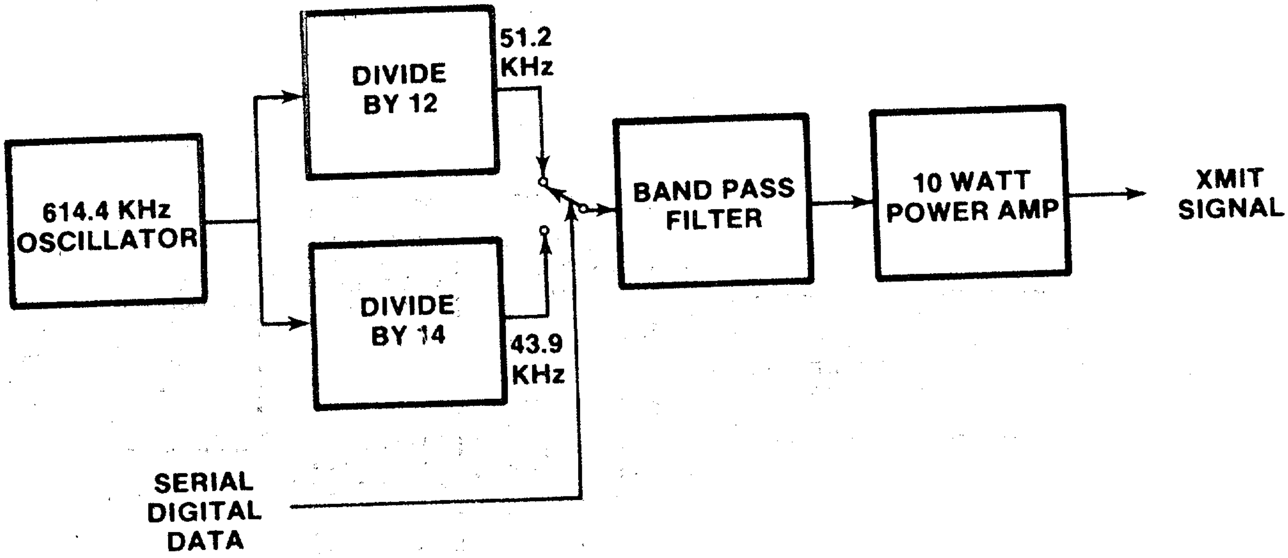

Figure 2-10. Acoustic Receiver Block Diagram

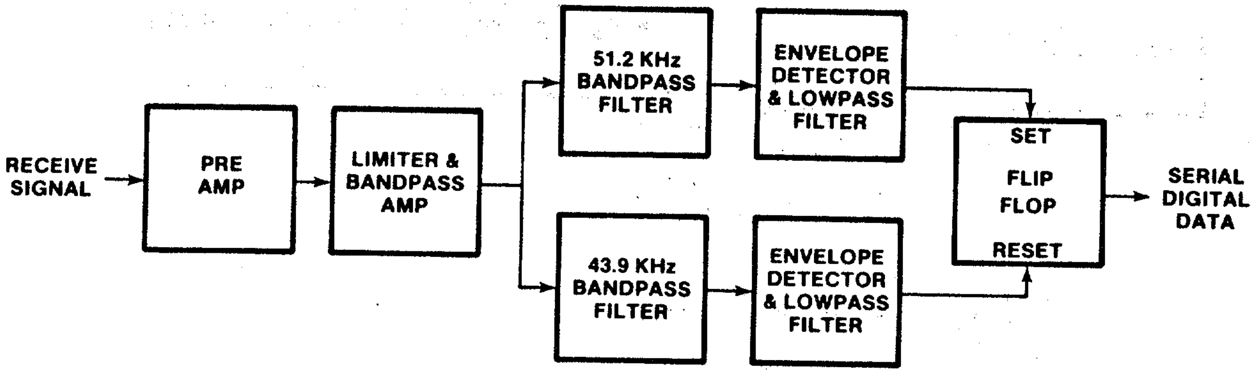

The acoustic preamplifier is a low-noise linear amplifier with a gain of 65 dB. This preamplifier is the heart of the acoustic telemetry system since its ability to detect minute signals (1 to 10 microvolts) determines the operating level of the system.

The amplified receive signal next goes to the receiver board. The receiver consists of three sections of gain and bandpass filtering. This section amplifies the signal by 100 dB and has a 10-kHz bandwidth centered at 47.5 kHz.

The signal is then fed to two bandpass filters, one at 43.9 kHz and the other at 51.2 kHz, which are each followed by a series of amplifiers that operate in the saturation mode and produce a clean square wave when the receive signal is in either of the frequency bands. The two signals drive the two sides of a digital flip-flop to generate the demodulated signal. The serial digital data stream is then decoded on the CPU board.

2.1.6 Data Gathering Software Description

This section provides an overview of the DAGS data gathering software. Appendix B contains flowcharts and descriptions of the software for each of the subsystems (DAGS, BRES, CARS). As mentioned before, the primary function of DAGS is to collect and store seismic data. This algorithm determines if an event of interest has occurred and then determines whether or not to store the event in the magnetic bubble memory. Figure 2-11 shows a diagram of the data acquisition algorithm.

The criterion used to determine if the current level of seismicity is associated with a potential earthquake event is one used extensively by the USGS and other agencies.[8] The method is based on continually updating averages and determining the present to past ratios of averages. The assumption implied in this method is that the more recent data is the signature (signal) of a candidate event. The accelerometers are sampled 100 times per second and the data are placed in a 1.7-second pre-event buffer in RAM. The

Figure 2-11. Data Gathering Algorithm Diagram.

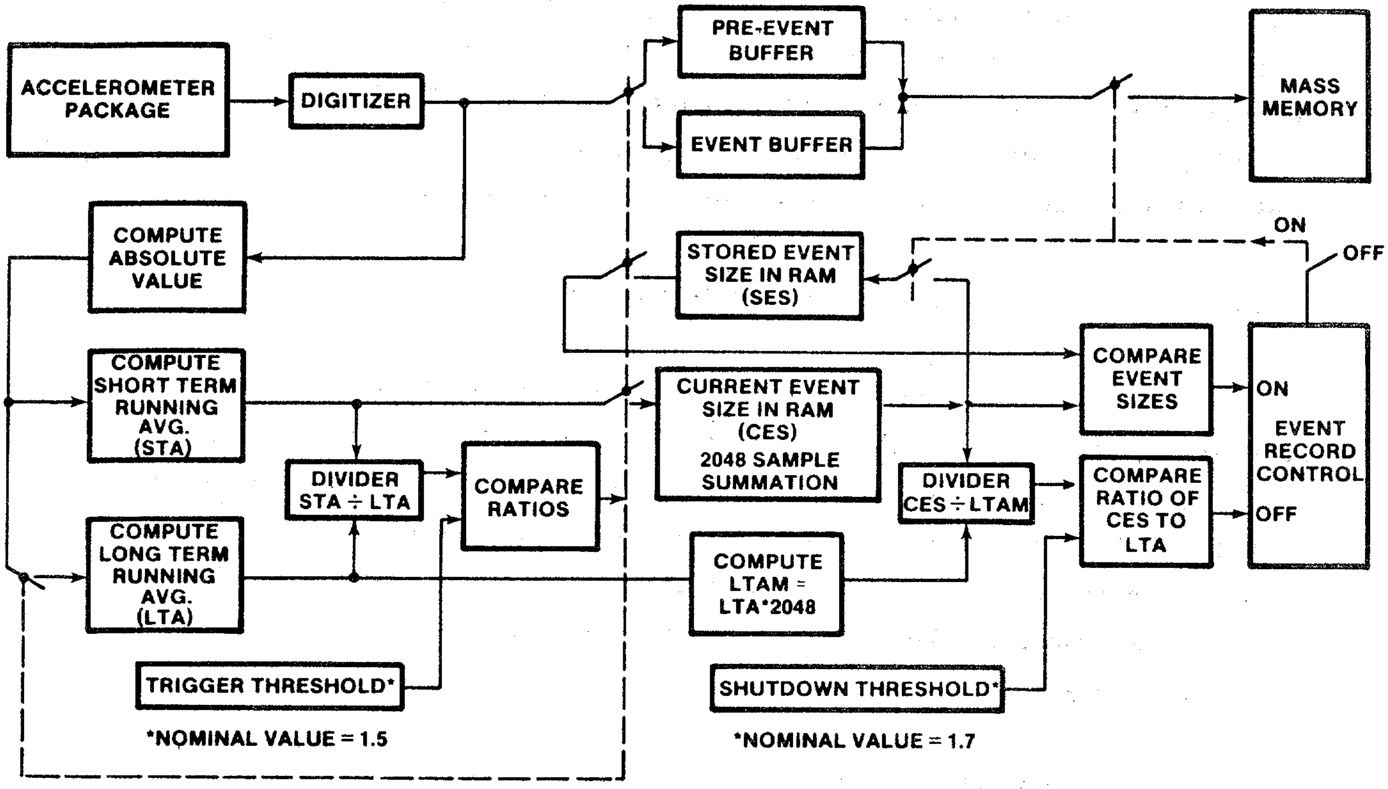

absolute value of the amplitude, A(t), of the output of the vertical accelerometer is used to update a short-term average at time t, STA(t), and a long-term average at time t, LTA(t). More specifically,

$$STA(t_{n+1}) = \frac{128-1}{128} \quad STA(t_n) \quad + \quad \left|\frac{A(t_{n+1})}{128}\right|$$

$$LTA(t_{n+1}) = \frac{2048-1}{2048} \quad LTA(t_n) \quad + \quad \left|\frac{A(t_{n+1})}{2048}\right|$$

Initially, $LTA(t_0) = STA(t_0) \equiv 0$, and for the first 2048 samples (20.48 sec),

$LTA(t_{n+1}) = LTA(t_{n+1}) = LTA(t_n) + \left|\frac{A(t_{n+1})}{2048}\right|$; the STA is updated as described above. The ratio of the two averages is not computed until the first 20.48 seconds have elapsed.

The STA is the average of the last 1.28 seconds of data and is a measure of the current seismic activity (signal strength). In contrast, the LTA is the average of the last 20.48 seconds of data and is a measure of the background seismic (noise) level. If the signal-to-noise ratio (STA/LTA) exceeds a preset threshold value, nominally 1.5, the current data block is treated as a candidate earthquake event. The time periods were chosen to give a reasonable length data window and permit easy manipulation by the microprocessor.

If a data string is determined to be a candidate earthquake event by exceeding the signal-to-noise threshold value, the LTA computation is halted as is the data transfer to the 1.7-second pre-event buffer. Incoming data from the accelerometers are then recorded in an event buffer section of RAM and a 20.48 record current event size is computed. Specifically,

$$\text{Current Event Size} = \sum_{t}^{t+20.48} |A(t)|$$

At the end of the 20.48 seconds the Current Event Size is used to determine whether or not to store the data currently stored in the RAM event buffer into the magnetic bubble memory.

As noted previously, the bubble memory is divided into 56 22.18-second blocks. The microcomputer has a section in RAM called the block information section which contains the status of each block (i.e., whether a block has event data or is vacant). If a block contains event data, the size of the block is also recorded. Since an earthquake event can be longer than 20.48 seconds, an event can have multiple blocks of data in the bubble memory. When comparing block event sizes, a check is first made to determine if any vacant blocks exist. If a vacant block is found, the current event and the pertinent information about the event, such as the time and date of the event, are stored in the bubble memory and the block information in RAM is updated. If no blocks are vacant, a comparison of event sizes is made to determine if the current event is larger than the smallest event size in the bubble memory. If a smaller event is found in the bubble memory, all of the blocks for that event are declared vacant and the current event is stored in one of the vacant blocks. If the current event is smaller than the minimum previously stored, the event is not stored in the bubble memory, and the system starts looking for another event. In this manner, the system always retains the largest events.

Once the first block of data of an event has been stored in the bubble memory, a new block of data is acquired. At the end of this subsequent block, a block event size is calculated as previously described. For blocks of an event other than the first, a shutdown ratio is computed based on the ratio of the block size to the LTA. If the ratio is less than a preset level, nominally 1.7, the event is declared over and the system begins looking for another event. Otherwise, the event is considered still in progress and the procedure for determining whether or not to store the present event data in the bubble memory continues as described above. This procedure continues until the new event is declared over or until all 56 blocks are filled by one event (an unlikely outcome). When an event is declared over, the LTA calculation is restarted and the new data are input to the pre-event buffer as before. The system will not declare an event until the 1.7 second pre-event buffer is filled with new data. Sufficient information is included with each block to reconstruct the data from a seismic event that has more than one block.

2.2 SEMS MECHANICAL SYSTEM DESCRIPTION

2.2.1 Overview

The external configuration of the SHELL SEMS is shown in the assembly layout drawing given in Figure 2-12. A detailed parts list of components, subassemblies, drawing numbers, and associated sources is presented in Appendix D. Although the appearance and layout of this unit is considerably different from that of earlier units, the function of major features is virtually the same as that described by Ryerson.[1]

A pressure-tight housing for the system electronics and batteries is provided by two pressure vessels mounted side by side under a smooth, protective framework of steel tubing. The frame is intended to deflect nets and cables that are dragged along the bottom by commercial fishermen. The acoustic transducer is mounted on a transverse plate on the top of the frame and provides communication with the surface.

Figure 2-13 shows the assembly drawing of the seismic probe. The probe contains the seismic accelerometers that sense the three orthogonal axes of orientation. This assembly is buried 5 feet in the sediment and 10 feet away from the seafloor unit. It communicates with the electronics via a 25-foot-long underwater cable that runs between the probe and the electronics pressure vessel.

The final major subassembly is the recovery float and its release mechanism (Figure 2-12). The purpose of this system is to allow the SEMS to be recovered from the seafloor by issuing a command from the shipboard communications system that will cause the release of the float and the attached recovery line. By this line, the SEMS can be hoisted from the bottom, although it is probable that the probe electrical cable will break,

Figure 2-12. The Seafloor Earthquake Measurement System, SEMS.

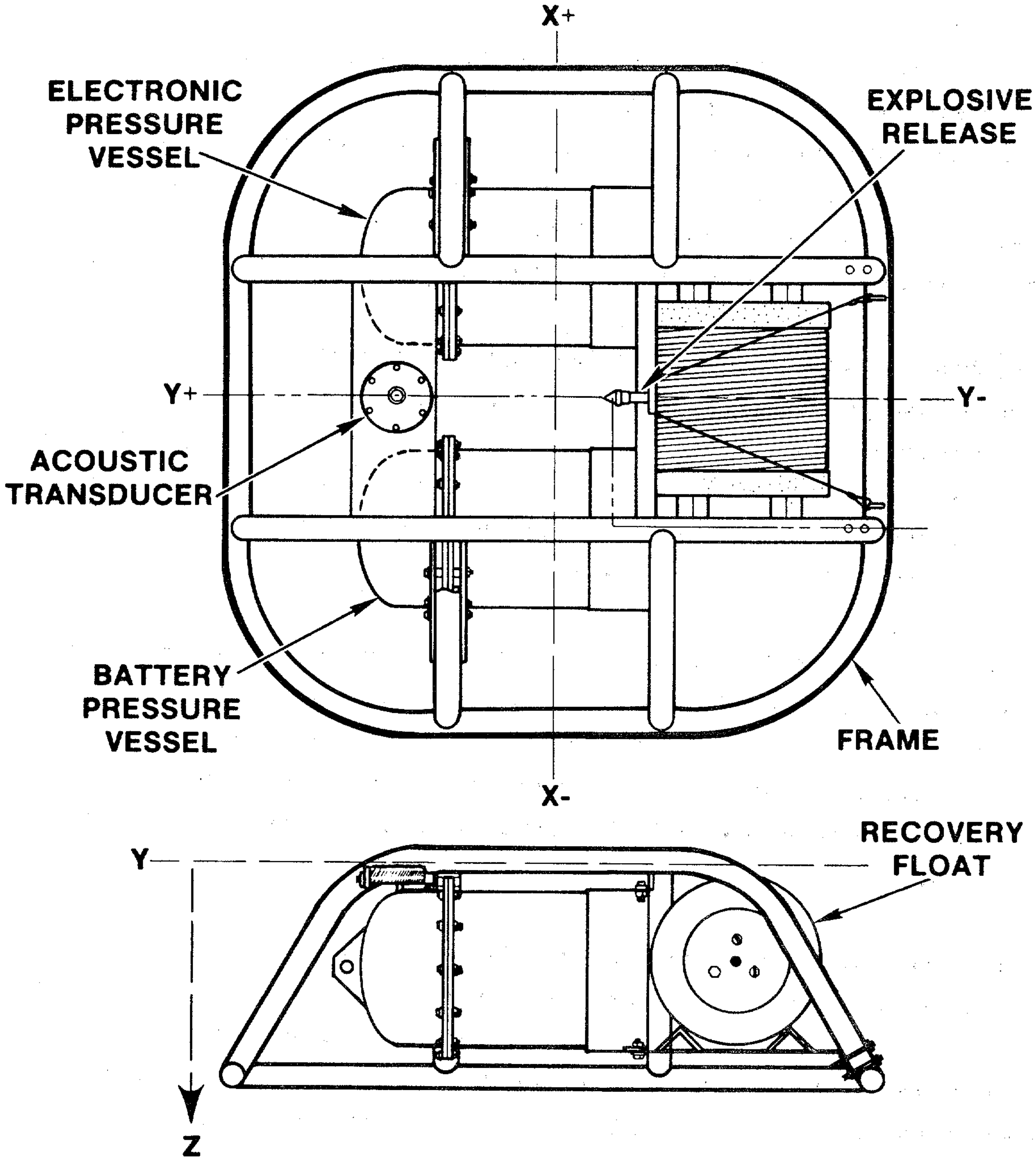

Figure 2-13. Probe Sensor Assembly

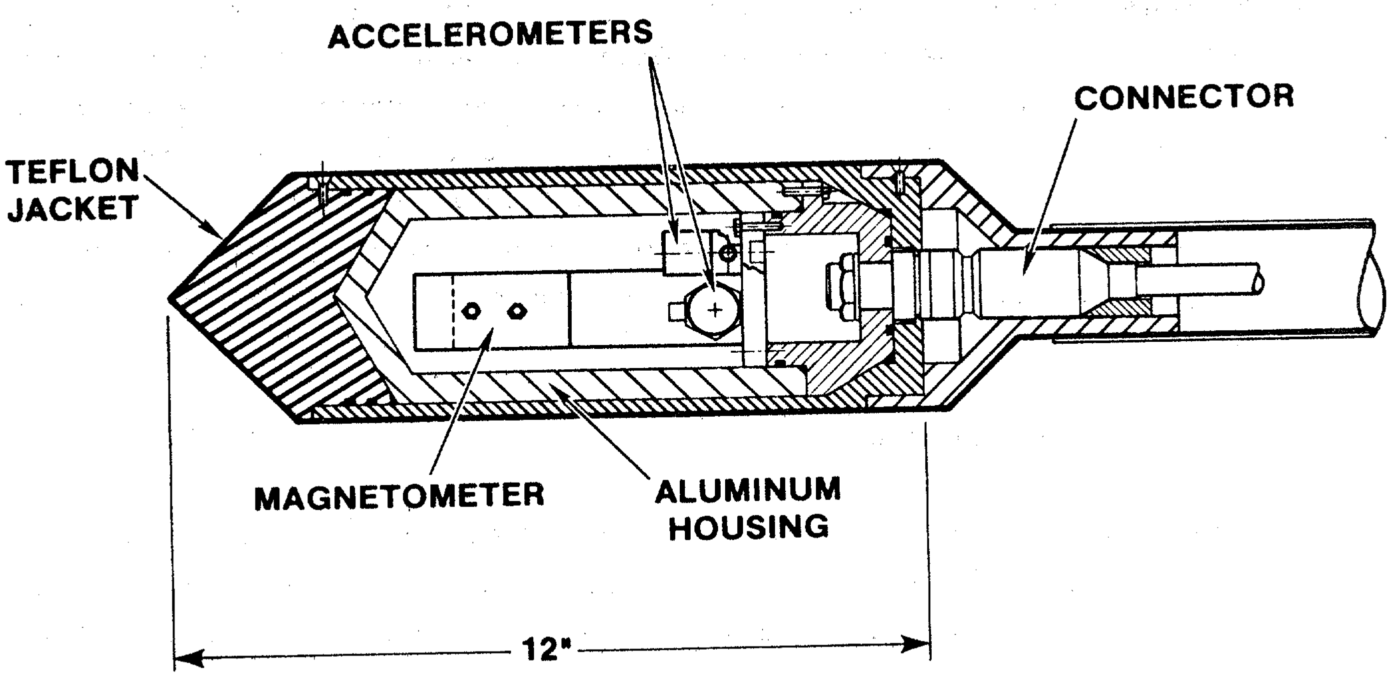

leaving the probe buried in the sediment. Recovery of the seafloor platform is possible as long as the internal batteries are charged to ten volts and the necessary telemetry and electrical systems are operational. Recovery is planned at the end of useful life and is a requirement under the federal law for scientific instruments of this type.[7]

2.2.2 System Mass Properties

The system mass properties in air and submerged in water are given in Tables 2-3 and 2-4. The coordinate system for applying these data is given in Figure 2-12. The weight of the unit is approximately 1,600 pounds in air, and 800 pounds submerged. The center of gravity is slightly forward of the geometrical center when viewed from above, displacing it three inches toward the acoustic transducer when dry, and about seven inches in this direction when submerged. The weight and location of the center of gravity appear to be satisfactory for purposes of shipping and deck handling. Having a substantial "wet" weight is also useful in anchoring the unit to the bottom and thereby resisting the dragging forces created by lines or nets that might contact the SEMS.

2.2.3 Frame Description

The frame is constructed of 2 1/2-inch IPS Schedule 40 pipe, having a resulting outside diameter of 2.875 inches and a wall thickness of 0.203 inches. The pipe is of mild steel and the frame is of welded construction. Assuming a uniform corrosion rate of 0.015 inches per year on inside and outside walls, the frame should retain enough strength to allow recovery of the unit after five years of submergence. Corrosion protection has been added to the frame to insure that average corrosion rates are kept well under 0.015 inches per year.

Lifting eyes were added to the frame fore and aft of the four tubular braces shown in Figure 2-12. These eyebolts were inserted through holes drilled horizontally in the frame crossmembers to avoid creating a surface feature that could snag a net or cable. A kevlar hoisting sling was attached to these eyes and is described in Section 2.2.4.

Just prior to deployment, eight, 1/2-inch-diameter threaded rods were inserted and fastened in holes located in a symmetrical pattern around the perimeter of the frame. These rods protruded ten inches beneath the bottom of the frame and served as anchoring features to help resist dragging forces created by nets or cables that might contact the SHELL SEMS. These rods add an additional resistance of about 200 pounds over the frictional resistance of the frame itself when they penetrate a soil having a bearing strength of 750 pounds per square foot.

The frame is protected from corrosion by a marine epoxy paint and eight zinc anodes, each weighing 12 pounds. The paint is a primer and overcoat formulation from AmChem Corporation, identified as Amercoat #64 primer and #66 top coat. The zinc anodes were purchased from Belmont Metals, Inc. under Military Specification MIL-A-18001J. These anodes were bolted to the frame, the recovery float support, and the pressure vessels in approximately symmetrical locations. Each anode contributes about 6,000 amp hours of time-integrated, galvanic current.

2.2.4 Pressure Vessel Assemblies

The two pressure vessel assemblies are shown in Figures 2-15 and 2-16. Each contains a payload of lithium batteries packaged in a rigid foam support. The foam is cast to a density of six pounds per cubic foot and is also used to support the SEMS electronics located in the forward end of the electronics pressure vessel (Figure 2-14). Dimensions are such that all components fit tightly and are under compression after final assembly.

The vessels are built-up units of welded construction and made from commercial pipe and forged bell ends. The average wall thickness is 0.438 inches, and at a uniform corrosion rate of 0.015 inches per year, the units can be deployed to a depth of 600 feet for five years. Leakage is prevented by incorporating dual O-ring seals at the joints and at all electrical connector

Figure 2-14. Battery Housing, Pressure Vessel Assembly #1

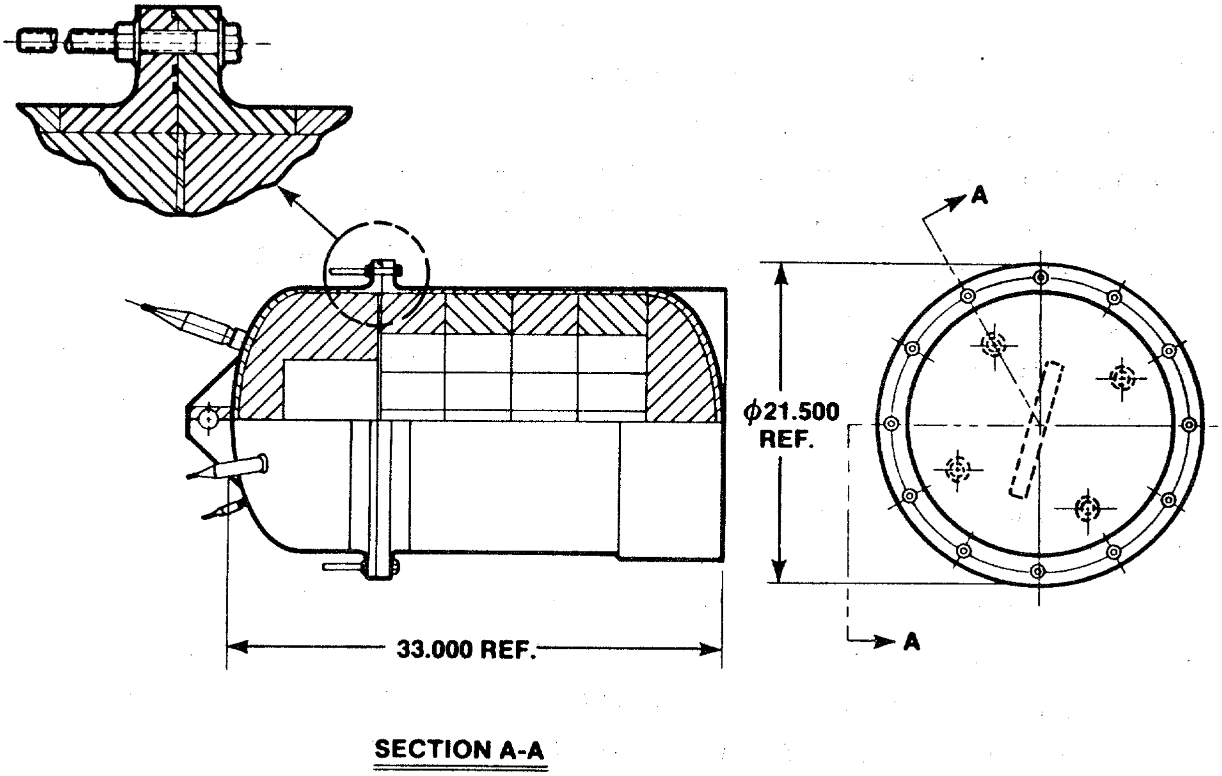

Figure 2-15. Battery Housing, Pressure Vessel Assembly #2

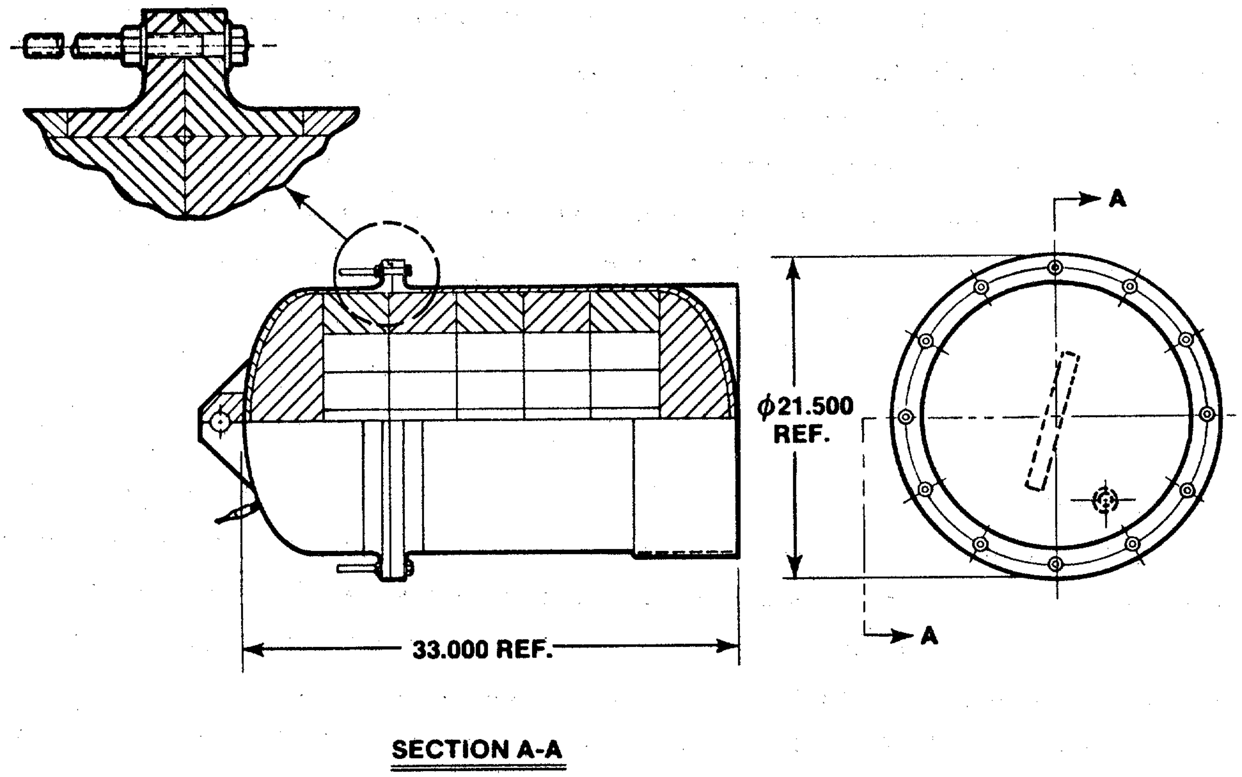

penetrations. A ring extension added to the base of each pressure vessel allows the units to be assembled upright. A lifting eye on the caps further aids in assembly of the pressure vessels. Pressure vessels are painted inside and out to provide clean, corrosion-protected surfaces.

A combination of seals and desiccant protect the pressure vessel payloads from moisture. The pressure vessel caps and all connector penetrations incorporate dual O-ring seals. The outer O-ring is an ethylene propylene compound to resist seawater attack. The inner O-ring of each assembly is butyl rubber to minimize the permeation of water vapor that migrates through the outer O-ring, and also serves as a backup to the outer O-ring should it fail. Two hundred grams of activated clay desiccant are added to each pressure vessel to keep the internal humidity below 50 percent. Figure 2-16 shows the internal humidity as a function of time, assuming that each pressure vessel is assembled in an uncontrolled environment where the ambient humidity is 40 percent, and the desiccant and foam have equilibrated to that humidity before sealing. The data in the figure were generated by a simplified version of the "LEAKY" code written by Mead and Harrah.[11]

2.2.5 Batteries Description

The SEMS is powered by 147 packs of lithium batteries supplied by Electrochem Industries. Each pack measures 2.6 inches square by 4.5 inches long, weighs 2.0 pounds, and carries Electrochem's part number 3PD20. Each battery pack is internally constructed of four double D cells connected in series. Each double D cell is capable of supplying a minimum of 30 amp-hours at the time of delivery. Electrochem has calculated that the total complement of batteries in SEMS should provide a useful life of about four years under the following operating conditions.

0° Centigrade
65 milliamp average total operating current
8 volt minimum operating voltage
15.8 volts starting voltage.

Figure 2-16. Calculated Relative Humidity After Five Years (SEMS Pressure Vessels)

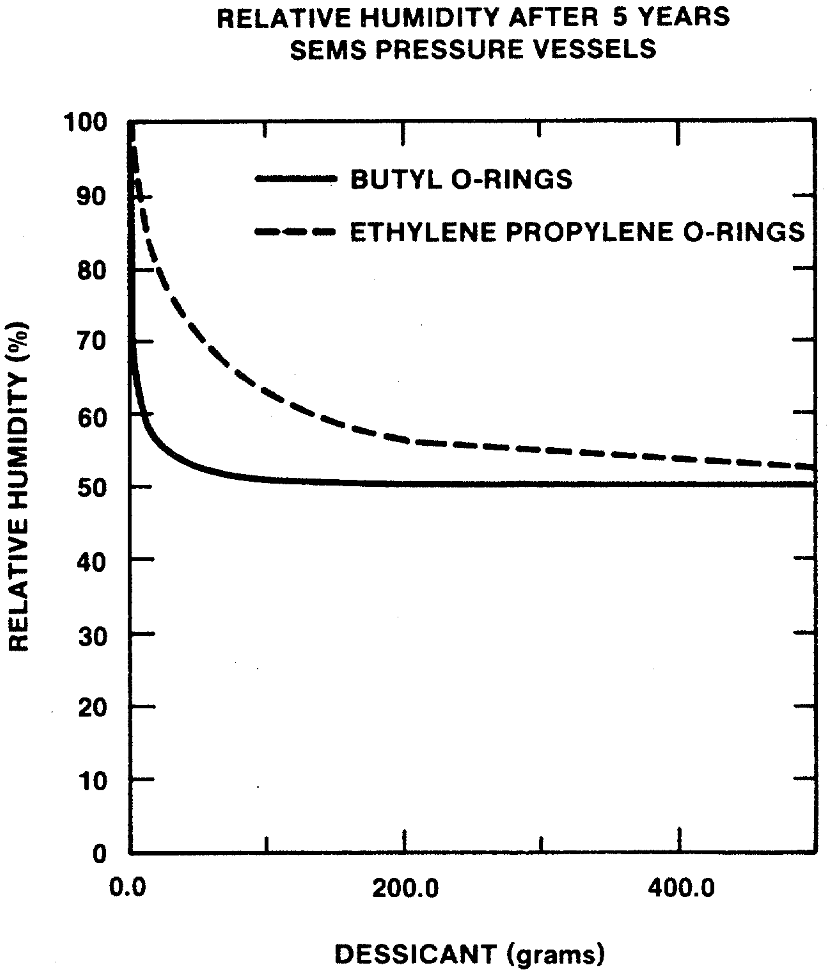

Intermittent telemetry transmissions on a three-month interval were found to have minimum effect on battery life.

The battery packs are arranged in layers of 21 packs per layer within the pressure vessels. There are three such layers in the electronics pressure vessel and another four layers in the battery pressure vessel. The packs are hand wired in parallel on each layer, and then the whole assembly is parallel wired to supply the SEMS electronics with its operating power.

2.2.6 Recovery System Description

The recovery float is mounted aft of the pressure vessels. It is composed of syntactic foam and is rated for long-term deep submergence. The float for the SHELL SEMS was originally supplied for an earlier version of SEMS by Emerson and Cumming, as a 22-inch-diameter assembly made from their Eccofloat compound FL-27. It was modified for this unit by reducing the diameter to 20 inches, resulting in a final bouyancy of 60 lbs with the recovery line attached.

A 350-foot-long recovery line is wound around the reduced diameter of the float. This is about 1.5 times the depth of submergence of the SHELL SEMS. This length can be increased up to a maximum of 450 feet for the 20-inch-diameter Eccofloat, or up to 720 feet for the float described in the assembly drawing of Figure 1. The line, supplied by Cortland Cable Company, is a braided kevlar construction, 3/8 inch in diameter, weighs 1.8 pounds per 100 feet when submerged, and has a breaking strength of 12,000 pounds.

The recovery float is held in place on the SEMS platform by a line that transverses over the top of the float and is connected to an explosively actuated separation bolt mounted on the upper frame crossmember. The separation bolt was supplied by Hi-Shear Corporation of Torrance, CA, as a special item. It is powered by a Hi-Shear PC-141 power cartridge that drives an internal piston that ruptures the bolt mechanically and without fragments.

The SEMS electronics incorporates a fire set that develops 10 volts and the necessary 3.5 amps firing current for the hot bridgewire devices in the power cartridge.

The SEMS can be commanded from the shipboard communications system to release the float.

2.2.7 Probe Sensor Description

The probe assembly is illustrated in Figure 2-13. It is composed of an outer protective cover of Teflon (TM), a pressure housing, a dual O-ring sealed electrical connector, and the active measuring devices inside.

Because the probe must spend up to five years buried in the sediments, it requires special corrosion protection. The O-ring sealed Teflon (TM) outer cover provides protection for the underlying 6061-T6 aluminum housing and also serves to reduce the average density of the probe to within 15 percent of the surrounding soil. This attention to corrosion protection also dictated the choice of monel for the body of the interface connector and the hard anodized coating that was applied to the aluminum housing.

The practice of dual O-ring seals has also been applied to the probe, with the use of ethylene propylene outer O-rings for resistance to seawater attack and butyl inner O-rings for minimum permeation of water vapor. In order to insure minimum internal humidity over the life of the unit, 37 grams of molecular sieve desiccant (Linde 13 Angstrom) were potted in the nose of the housing in a mixture containing 44 grams of Dow Corning Sylgard 184 two component RTV rubber. The resulting internal humidity due to water vapor permeation over a five-year period can be found in Figure 2-17. The data shown in the figure are taken from the "LEAKY" code mentioned previously and assume that the relative humidity at the time of assembly is 30 percent.

Figure 2-17. Calculated Relative Humidity After Five Years (SEMS Seismic Probe)

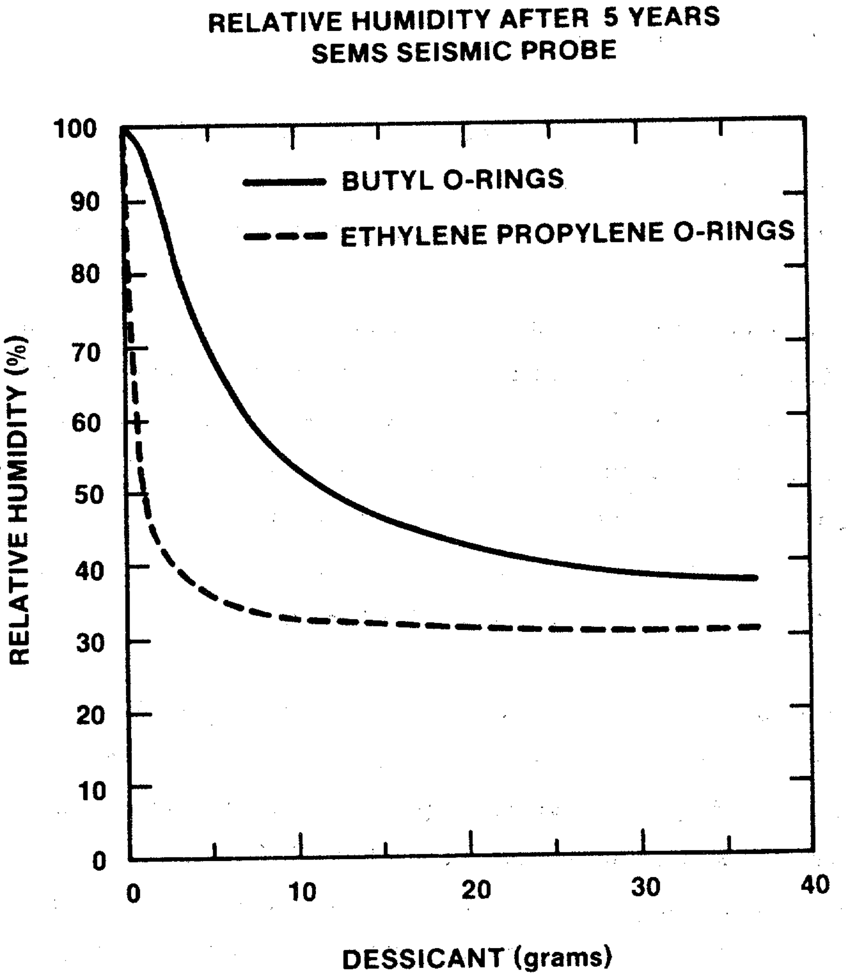

Seismic accelerations are measured by three orthogonally-mounted accelerometers located within the housing.

The measured natural frequency of the accelerometer mount with accelerometers and magnetometer attached was found to be 200 Hz. This is well above the range of interest for seismic data (0.5 to 20 Hz), and should not affect the quality of data collected.

The Schonstedt SAM-72C magnetometer for measuring the earth's magnetic field is the other active device inside the probe. It allows a determination of the north-south orientation of the probe to within three degrees.

2.2.8 Underwater Electrical Interconnection

Four cable and connector assemblies link the various pressure vessels and SHELL SEMS subsystems together:

1. Probe cable assembly;
2. Battery cable assembly;
3. Telemetry cable assembly;
4. Recovery float cable assembly.

All cable assemblies have certain features in common:

1. Bulkhead connectors are dual O-ring sealed, both at the connector to plug interface and at the pressure housing feedthrough.

2. With the exception of the monel connector on the probe, all bulkhead connectors and mating connectors are 316 stainless steel.

3. All connector bodies on cable ends are potted on the backside to resist moisture penetration around pins and conductors.

4. All cables are neoprene jacketed, and neoprene overmolding is used to bond the cable jacket to the connector body.

5. Conductor insulation is Teflon (TM) to resist the high temperatures of neoprene overmolding. The transducer cable is an exception.

In addition to these features designed to give long life and corrosion resistance, the probe cable is also armored with a stainless steel braid to help resist the abrasion of handling during deployment and provide additional strength.

Table 2-2

Acoustic Telemetry Operating Parameters

Communication Type	answer back with a data block sent from the subsurface on command from the surface.
Modulation Technique	noncoherent frequency shift keying (FSK).
Operating Frequencies	43.9 and 51.2 kHz.
Data Rate	75 to 1200 bits per second.
Data Format	asynchronous nonreturn to zero with start and stop bits.
Error Detection	parity bit for each eight data bits and one longitudinal parity check character per data block.
Transmitter Type	switched dual frequency modulator followed by a transistor amplifier.
Transmit Power Level	electrical: 10 watts. acoustic: 180 dB re 1 uPa at 1 meter.
Receiver Type	high-gain bandpass limiting filter followed by dual bandpass filters and amplitude detectors.
Receiver Sensitivity	1 to 10 microvolt depending upon bit rate.
Transducer Pattern	conical with 140 degree total included angle.

Table 2-3

System Mass Properties in Air

ITEM NO.	ASSEMBLY	DRY WT (LB)	C.G. X (IN.)	C.G. Y (IN.)	C.G. Z (IN.)
100	FRAME	289.2	0.0	0.0	16.1
200	ELECTRON P.V.	318.5	15.0	8.0	12.8
300	BATTERY P.V.	318.5	-15.0	8.0	12.8
400	EL P.V. BATTERIES	168.0	15.0	4.5	12.8
500	MAIN BATTERIES	210.0	-15.0	7.0	12.8
600	ELECTRONICS	26.5	15.0	17.0	12.8
700	TM TRANSDUCER	20.0	0.0	19.0	5.0
800	RECOVERY ASSY	166.0	0.0	-24.0	12.8
900	INTERCONNECTIONS	5.0	0.0	15.0	12.0
1000	MISCELLANEOUS	75.0	0.0	0.0	12.8
	RESULTANT	1596.7	-0.1	2.7	13.3

Table 2-4

System Mass Properties in Water

ITEM NO.	ASSEMBLY	WET WT (LB)	WET C.G. X (IN.)	WET C.G. Y (IN.)	WET C.G. Z (IN.)
100	FRAME	252.3	0.0	0.0	16.1
200	ELECTRON P.V.	58.4	15.0	10.2	12.8
300	BATTERY P.V.	58.4	-15.0	10.2	12.8
400	EL P.V. BATTERIES	168.0	15.0	4.5	12.8
500	MAIN BATTERIES	210.0	-15.0	7.0	12.8
600	ELECTRONICS	26.5	15.0	17.0	12.8
700	TM TRANSDUCER	11.7	0.0	19.0	5.0
800	RECOVERY ASSY	-57.7	0.0	-24.0	12.8
900	INTERCONNECTIONS	1.7	0.0	15.0	12.0
1000	MISCELLANEOUS	65.0	0.0	0.0	12.8
	RESULTANT	794.3	-0.3	6.9	13.7

REFERENCES

1. D. E. Ryerson, "Seafloor Earthquake Measurement System, Volumes I, II, and III," Sandia National Laboratories Report No. SAND81-1810, Albuquerque, NM, December 1981.

2. Agreement between the United States of America and Shell Development Company, No. DE-F104-83AL24280, February 6, 1984.

3. J. P. Hickerson, "A Proposal for Seafloor Earthquake Measurement in the Southern Bering Sea and the Aleutian Shelf," No. 6241126WA, Sandia National Laboratories, Albuquerque, NM, November 1984.

4. R. Husid, J. H. Haws, M. M. Patterson, "A System for Acquiring Earthquake Data on Offshore Oil Platforms," Offshore Technology Conference, May 1985.

5. D. E. Ryerson, "Results of a Wide-Angle Underwater Acoustic Telemetry Test," Sandia National Laboratories Report No. SAND82-0471, Albuquerque, NM, March 1982.

6. D. E. Ryerson and G. C. Hauser, "A High-Data-Rate Wide-Angle Underwater Acoustic Telemetry System," Sandia National Laboratories Report No. SAND84-0994, Albuquerque, NM, July 1984.

7. J. P. Hickerson, Communications with the Army Corps of Engineers, Sandia National Laboratories, Albuquerque, NM, March 12, 1985.

8. J. S. Eterno et al., "Special Event Detection for an Unattended Seismic Observatory," Charles Starr Draper Laboratory, Cambridge MA, Report No. R-765, March 1974.

9. D. Longcope to R. W. Prindle, Memorandum, Subject: "Analysis of Sediment-Structure Interaction for the Seafloor Earthquake Measurement System," Sandia National Laboratories, March 1984.

10. K. E. Mead, "Leaky-A Computer Program for Estimating the Distribution of Moisture and Other Gases in Permeable Containers," Sandia National Laboratories Report No. SAND82-0107, Albuquerque, NM, June 1982.

APPENDIX A

INTERCONNECTION

AND

SCHEMATICS

DAGS Card Cage Backplane

Board	Slot	Page
Modulator Board	J1-1	2
Analog Board	J1-3	3
Ram Board	J1-4	4
CPU Board	J1-5	5
MBM Control Board	J1-6	6
MBM Board	J1, J2-8	7,8
Analog Power Board	J2-2	9
Logic Power Board	J2-3	10
MBM Power Board	J2-5	11

Modulator Board Slot J1-1

Pin	Row A	Pin	Row B	Pin	Row C
1-	Gnd	1-	Gnd	1-	Gnd
2-		2-	Mod Out	2-	+5V
3-		3-		3-	+5V
4-		4-		4-	
5-		5-	-5V	5-	
6-		6-		6-	
7-	614,000 HZ	7-		7-	
8-		8-		8-	
9-		9-		9-	
10-	RTC In	10-		10-	
11	RTC Out	11-		11-	
12-	OUTS	12-		12-	
13-		13-		13-	
14-		14-		14-	
15-		15-		15-	
16-	19.2 KHZ	16-		16-	
17-		17-		17-	
18-	TPB	18-		18-	
19-	Clear	19-		19-	
20-	DMA Out*	20-		20-	DS1
21-		21-		21-	
22-	SC0	22-		22-	
23-	SC1	23-		23-	
24-	MRD*	24-		24-	
25-		25-		25-	
26-		26-		26-	D6
27-		27-		27-	D5
28-		28-		28-	D4
29-		29-		29-	D3
30-		30-		30-	D2
31-		31-		31-	D1
32-		32-	ATM Xmit On	32-	D0
33-	Logic Serial Out	33-	Xmit Relay On	33-	
34-		34-	+12V Battery	34-	+5V
35-		35-		35-	+5V
36-	Gnd	36-	Gnd	36-	Gnd

* Indicates negative true logic

Analog Board Slot J1-3

Pin	Row A	Pin	Row B	Pin	Row C
1-	Gnd	1-	Gnd	1-	Gnd
2-	+7.5V	2-		2-	+5V
3-		3-		3-	+5V
4-		4-		4-	
5-		5-		5-	
6-		6-		6-	
7-	614,000 HZ	7-	Z Accelerometer -	7-	
8-		8-	Z Accelerometer +	8-	
9-		9-	X Magnetometer	9-	
10-		10-	GND	10-	
11-		11-		11-	
12-	Outs	12-	Y Accelerometer -	12-	
13-		13-	GND	13-	
14-		14-	Y Accelerometer +	14-	
15-		15-		15-	
16-		16-	GND	16-	
17-		17-	Y Magnetometer	17-	
18-	TPB	18-		18-	
19-	Clear	19-	EANPWR*	19-	
20-		20-	EXTPWR*	20-	
21-		21-		21-	
22-		22-		22-	MRD*
23-		23-		23-	DS6
24-		24-		24-	DS7
25-		25-	X Accelerometer +	25-	D7
26-		26-	X Accelerometer -	26-	D6
27-	INS	27-		27-	D5
28-		28-		28-	D4
29-		29-		29-	D3
30-		30-		30-	D2
31-		31-	+12V Battery	31-	D1
32-		32-		32-	D0
33-		33-		33-	+22V
34-		34-		34-	+5V
35-		35-		35-	+5V
36-	Gnd	36-	Gnd	36-	Gnd

* Indicates negative true logic

RAM Board Slot J1-4

Pin	Row A	Pin	Row B	Pin	Row C
1-	Gnd	1-	Gnd	1-	Gnd
2-		2-		2-	+5V
3-		3-		3-	+5V
4-		4-		4-	A15
5-		5-		5-	A14
6-		6-		6-	A13
7-		7-		7-	A12
8-		8-		8-	A11
9-		9-		9-	A10
10-		10-		10-	A9
11-		11-		11-	A8
12-		12-		12-	A7
13-		13-		13-	A6
14-		14-		14-	A5
15-		15-		15-	A4
16-		16-		16-	A3
17-		17-		17-	A2
18-		18-		18-	A1
19-		19-		19-	A0
20-		20-		20-	
21-		21-		21-	
22-		22-		22-	
23-		23-		23-	
24-		24-		24-	
25-		25-		25-	D7
26-		26-		26-	D6
27-		27-		27-	D5
28-		28-		28-	D4
29-		29-		29-	D3
30-		30-		30-	D2
31-		31-		31-	D1
32-		32-		32-	D0
33-		33-		33-	
34-		34-		34-	+5V
35-		35-		35-	+5V
36-	Gnd	36-		36-	Gnd

* Indicates negative true logic

CPU Board Slot J1-5

Pin	Row A	Pin	Row B	Pin	Row C
1-	Gnd	1-	Gnd	1-	Gnd
2-	+7.5V	2-		2-	+5V
3-		3-		3-	+5V
4-		4-		4-	A15
5-		5-		5-	A14
6-	MMSEL	6-		6-	A13
7-	614,000 HZ	7-		7-	A12
8-	1200 HZ	8-		8-	A11
9-	INT #4	9-		9-	A10
10-	RTC In	10-		10-	A9
11-	RTC Out	11-		11-	A8
12-	OUTS	12-		12-	A7
13-	MSEL	13-		13-	A6
14-	MQ2	14-		14-	A5
15-	MQ1	15-		15-	A4
16-	19.2 KHZ	16-		16-	A3
17-		17-		17-	A2
18-		18-		18-	A1
19-	Clear	19-		19-	A0
20-	DMA Out*	20-		20-	DS1
21-	DMA IN*	21-		21-	DS4
22-	SC0	22-		22-	DS5
23-	SC1	23-		23-	DS6
24-	MRD*	24-		24-	DS7
25-	MWR*	25-		25-	D7
26-	RS232 OUT	26-		26-	D6
27-	INS	27-		27-	D5
28-	EXT INT*	28-		28-	D4
29-	LOGIC SERIAL IN	29-		29-	D3
30-	RS232 IN	30-		30-	D2
31-		31-		31-	D1
32-	START PULSE	32-		32-	D0
33-	Logic Serial Out	33-		33-	
34-		34-		34-	+5V
35-	-7.5V	35-		35-	+5V
36-	Gnd	36-	Gnd	36-	Gnd

* Indicates negative true logic

Bubble Control Board Slot J1-6

Pin	Row A	Pin	Row B	Pin	Row C
1-	Gnd	1-	Gnd	1-	Gnd
2-	+12V	2-		2-	+5V
3-	+12V	3-		3-	+5V
4-	CS*	4-		4-	A15
5-		5-		5-	A14
6-	DB4	6-	BRD*	6-	A13
7-		7-		7-	A12
8-		8-		8-	A11
9-		9-		9-	A10
10-	DB6	10-		10-	A9
11-		11-		11-	A8
12-	DB7	12-	4 MHZ	12-	A7
13-		13-	M SEL	13-	A6
14-	DB8	14-	*****	14-	A5
15-		15-		15-	A4
16-	DB3	16-	ERR FLAG*	16-	A3
17-	2.45 MHZ	17-		17-	A2
18-	DB2	18-	TPB	18-	A1
19-	WAIT*	19-	DET. ON*	19-	A0
20-	DB1	20-	DMA OUT*	20-	CLEAR
21-		21-	DMA IN*	21-	
22-	DB0	22-	SC0	22-	
23-		23-	SC1	23-	
24-	BA0	24-	MRD*	24-	
25-		25-	MWR*	25-	D7
26-		26-		26-	D6
27-		27-		27-	D5
28-	DRQ	28-	EXT. INT*	28-	D4
29-		29-		29-	D3
30-	DACK*	30-		30-	D2
31-		31-		31-	D1
32-	+12V SW	32-	+12V SW	32-	D0
33-		33-	+5V BUB	33-	+5V BUB
34-	+5V SW	34-		34-	+5V
35-	+5V SW	35-		35-	+5V
36-	Gnd	36-	Gnd	36-	Gnd

* Indicates negative true logic

Magnetic Bubble Board Slot J1-8

Pin	Row A	Pin	Row B	Pin	Row C
1-		1-		1-	
2-		2-		2-	
3-		3-		3-	
4-	CS*	4-		4-	
5-		5-		5-	
6-	DB4	6-		6-	
7-		7-		7-	
8-	DB5	8-		8-	
9-		9-		9-	
10-	DB6	10-		10-	
11-		11-		11-	
12-	DB7	12-		12-	
13-		13-		13-	
14-	DB8	14-		14-	
15-		15-		15-	
16-	DB3	16-		16-	
17-		17-		17-	
18-	DB2	18-		18-	
19-		19-		19-	
20-	DB1	20-		20-	
21-		21-		21-	
22-	DB0	22-		22-	
23-		23-		23-	
24-	BA0	24-		24-	
25-		25-		25-	
26-	INT	26-		26-	
27-		27-		27-	
28-	DRQ	28-		28-	
29-		29-		29-	
30-	DACK*	30-		30-	
31-		31-		31-	
32-	+12V SW	32-		32-	
33-	+5V SW	33-		33-	
34-	+5V SW	34-		34-	
35-		35-		35-	
36-	BATT GND	36-		36-	

* Indicates negative true logic

Magnetic Bubble Board Slot J2-8

Pin	Row A	Pin	Row B	Pin	Row C
1-		1-		1-	
2-		2-		2-	
3-		3-		3-	
4-		4-		4-	
5-		5-		5-	
6-	BWR*	6-		6-	
7-		7-		7-	
8-	BRD*	8-		8-	
9-		9-		9-	
10-	RESET*	10-		10-	
11-	4 MHZ	11-		11-	
12-		12-		12-	
13-	BUS. RD*	13-		13-	
14-		14-		14-	
15-	ERR. FLAG*	15-		15-	
16-	DET. ON*	16-		16-	
17-		17-		17-	
18-	WAIT*	18-		18-	
19-		19-		19-	
20-		20-		20-	
21-		21-		21-	
22-		22-		22-	
23-		23-		23-	
24-		24-		24-	
25-		25-		25-	
26-		26-		26-	
27-		27-		27-	
28-		28-		28-	
29-		29-		29-	
30-		30-		30-	
31-		31-		31-	
32-	+12V SW	32-		32-	
33-		33-		33-	
34-	+5V SW	34-		34-	
35-		35-		35-	
36-	BATT GND	36-		36-	

* Indicates negative true logic

Analog Power Supply Board   Slot J2-2

Pin	Row A	Pin	Row B	Pin	Row C
1-		1-		1-	+12V
2-		2-		2-	
3-		3-		3-	+18V MAG. PWR
4-		4-		4-	
5-		5-		5-	GND
6-		6-		6-	
7-		7-		7-	
8-		8-		8-	
9-		9-		9-	
10-		10-		10-	
11-		11-		11-	-7.5V
12-		12-		12-	
13-		13-		13-	GND
14-		14-		14-	
15-		15-		15-	
16-		16-		16-	
17-		17-		17-	+18V Z ACC. PWR.
18-		18-		18-	
19-		19-		19-	
20-		20-		20-	
21-		21-		21-	+18V Y ACC. PWR.
22-		22-		22-	
23-		23-		23-	
24-		24-		24-	
25-		25-		25-	+18V X ACC. PWR.
26-		26-		26-	
27-		27-		27-	GND
28-		28-		28-	GND
29-		29-		29-	GND
30-		30-		30-	GND
31-		31-		31-	GND
32-		32-		32-	GND
33-		33-		33-	GND
34-		34-		34-	
35-		35-		35-	+12V BATT
36-		36-		36-	+12V BATT

* Indicates negative true logic

Logic Power Supply Board Slot J2-3

Pin	Row A	Pin	Row B	Pin	Row C
1-		1-		1-	GND
2-		2-		2-	GND
3-		3-		3-	GND
4-		4-		4-	GND
5-		5-		5-	GND
6-		6-		6-	
7-		7-		7-	+12V BAT
8-		8-		8-	+12V BAT
9-		9-		9-	+12V BAT
10-		10-		10-	+12V BAT
11-		11-		11-	+12V BAT
12-		12-		12-	
13-		13-		13-	
14-		14-		14-	
15-		15-		15-	
16-		16-		16-	
17-		17-		17-	
18-		18-		18-	
19-		19-		19-	
20-		20-		20-	-5V
21-		21-		21-	-5V
22-		22-		22-	-5V
23-		23-		23-	-5V
24-		24-		24-	-5V
25-		25-		25-	
26-		26-		26-	GND
27-		27-		27-	GND
28-		28-		28-	GND
29-		29-		29-	GND
30-		30-		30-	GND
31-		31-		31-	+5V
32-		32-		32-	+5V
33-		33-		33-	+5V
34-		34-		34-	+5V
35-		35-		35-	+5V
36-		36-		36-	

* Indicates negative true logic

MBM Power Supply Board   Slot J2-5

Pin	Row A	Pin	Row B	Pin	Row C
1-		1-		1-	GND
2-		2-		2-	GND
3-		3-		3-	GND
4-		4-		4-	GND
5-		5-		5-	GND
6-		6-		6-	
7-		7-		7-	+12V BAT
8-		8-		8-	+12V BAT
9-		9-		9-	+12V BAT
10-		10-		10-	+12V BAT
11-		11-		11-	+12V BAT
12-		12-		12-	
13-		13-		13-	
14-		14-		14-	
15-		15-		15-	
16-		16-		16-	
17-	CONTROL	17-		17-	
18-		18-		18-	
19-		19-		19-	
20-		20-		20-	
21-		21-		21-	+12V BUB
22-		22-		22-	+12V BUB
23-		23-		23-	+12V BUB
24-		24-		24-	+12V BUB
25-		25-		25-	+12V BUB
26-		26-		26-	GND
27-		27-		27-	GND
28-		28-		28-	GND
29-		29-		29-	GND
30-		30-		30-	GND
31-		31-		31-	+5V BUB
32-		32-		32-	+5V BUB
33-		33-		33-	+5V BUB
34-		34-		34-	+5V BUB
35-		35-		35-	+5V BUB
36-		36-		36-	

* Indicates negative true logic

DAGS INTERNAL CABLES AND INTERNAL LAYOUT

Power from Battery

Internal Connector PT07-12-3P (J1) PT06-12-3S (P1)	Signal Name	DAGS Backplane Analog Slot 3
A	Battery +12 Volts	see Power Connections
B	Battery Return	

Acoustic Transducer Connection

External Connector Brantner MSS-K3-BCR	Internal Connector LJT07-9-3S (J2)

SENSOR PROBE CONNECTION

External Connector Brantner MIN-K12-CCP	Internal Connector PT MIN-K12-BCR	Signal Name	DAGS Backplane
1	G	X ACC +	B 26
2	S	X ACC -	B 7
3	H	Y ACC +	B 14
4	T	Y ACC -	B 12
5	J	Z ACC +	B 8
6	L	Z ACC -	B 25
7	E	MAG PWR GND	B 20
8	A	+ 12V BATT	12V BATT
9	C	MAG SIG GND	B 16
10	B	X MAG	B 9
11	D	Y MAG	B 17
12	F	MAG SIG GND	B 16

Diode Shorting Connector

Internal Connector LJT07-13-4S (J4) LJT06-13-4P (P4)	Signal Name	DAGS Backplane
B	Diode Anode	Power Connections
D	Diode Cathode	

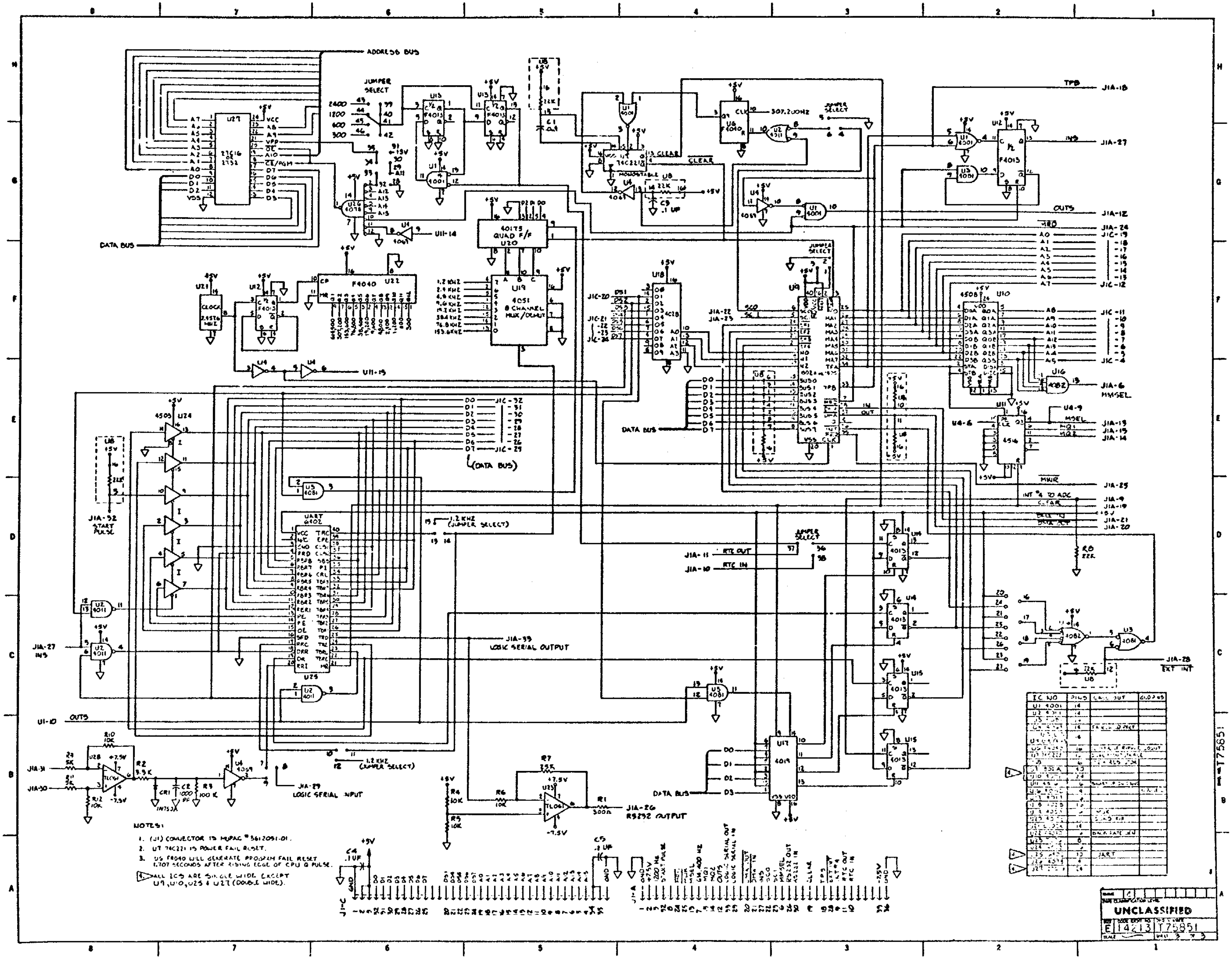

NOTES:

1. (J1) CONNECTOR IS MUPAC #561205I-01.
2. U7 74C221 IS POWER FAIL RESET.
3. U6 F4040 WILL GENERATE PROGRAM FAIL RESET 1.707 SECONDS AFTER RISING EDGE OF CPU Q PULSE.
4. ALL ICS ARE SINGLE WIDE EXCEPT U9, U10, U25 & U27 (DOUBLE WIDE).

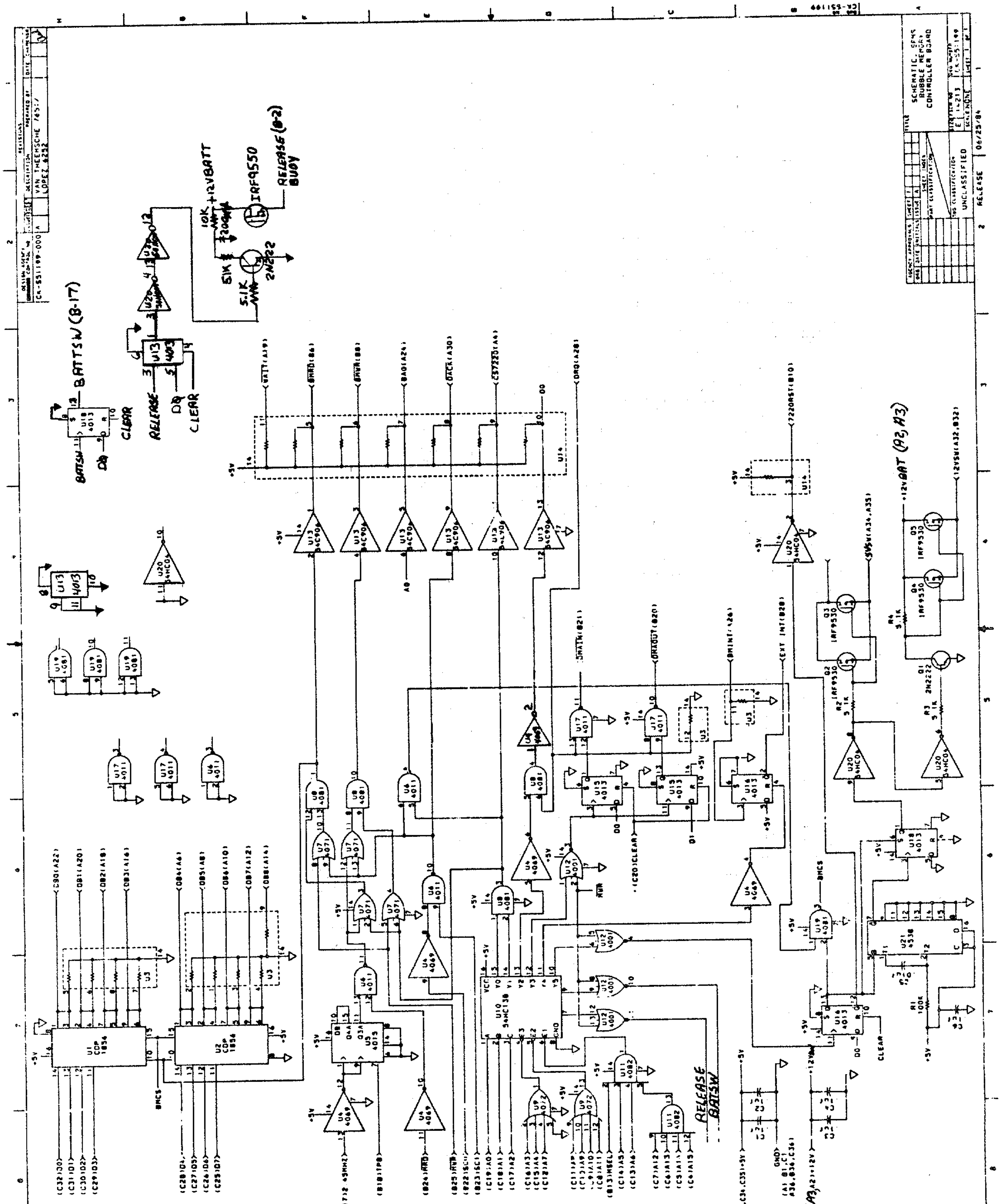
SCHEMATIC, SEMS BUBBLE MEMORY CONTROLLER BOARD
UNCLASSIFIED
RELEASE 06/25/84
CK-551199
BATTSW (B-17)
RELEASE (B-2) BUOY
IRF9550
+12VBATT
2N2222
10K
51K
5.1K
RELEASE
DQ
CLEAR
BATSW
U13 4013
U18 4013
U20 54HC04
U19 4081
U17 4011
U1 CDP 1854
U2 CDP 1854
U10 54HC138
U14 4013
U21 4538
U3
U4 4069
U5 4013
U6 4011
U7 4071
U8 4081
U9 4072
U11 4082
U12 4001
U15 4013
U16 4013
Q1 2N2222
Q2 IRF9530
Q3 IRF9530
Q4 IRF9530
Q5 IRF9530
R1 100K
R2 5.1K
R3 5.1K
R4 5.1K
BMCS
7220RST(B10)
+12VBAT (A2, A3)
12VSW(A32,B32)
SVSW(A34,A35)
EXT INT(B20)
BMINT(A26)
DRAIN(B21)
DRAOUT(B20)
DRQ(A28)
CS7220(A4)
DACK(A30)
BA0(A24)
BMWR(B8)
BMRD(B6)
BATT(A19)
RELEASE BATSW
(A1)(2.45MHZ)
(A3,A21)+12V
GND

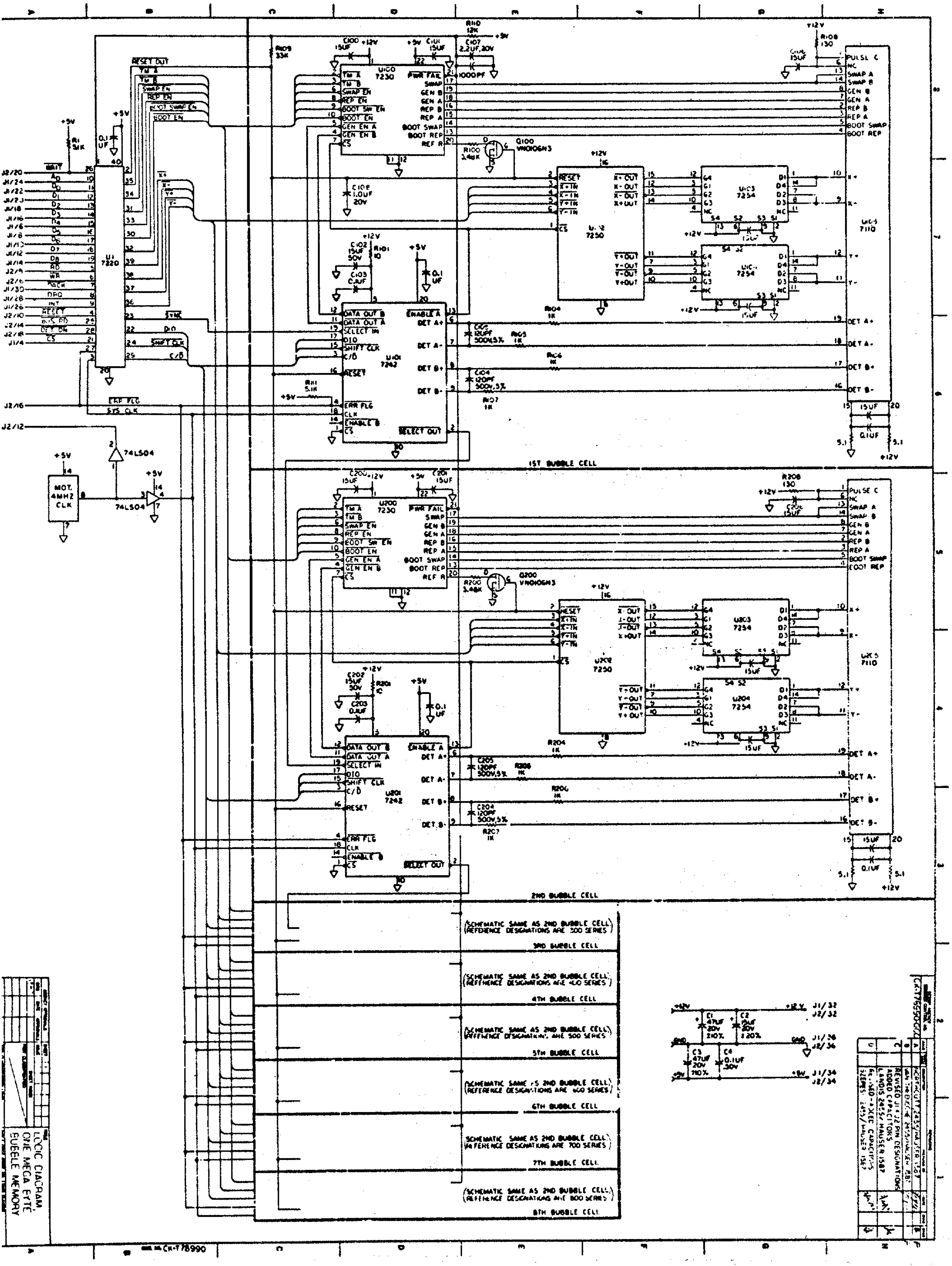
LOGIC DIAGRAM, ONE MEGA BYTE BUBBLE MEMORY
CK-178990
CK-1785950C
1ST BUBBLE CELL
2ND BUBBLE CELL
(SCHEMATIC SAME AS 2ND BUBBLE CELL) (REFERENCE DESIGNATIONS ARE 300 SERIES)
3RD BUBBLE CELL
(SCHEMATIC SAME AS 2ND BUBBLE CELL) (REFERENCE DESIGNATIONS ARE 400 SERIES)
4TH BUBBLE CELL
(SCHEMATIC SAME AS 2ND BUBBLE CELL) (REFERENCE DESIGNATIONS ARE 500 SERIES)
5TH BUBBLE CELL
(SCHEMATIC SAME AS 2ND BUBBLE CELL) (REFERENCE DESIGNATIONS ARE 600 SERIES)
6TH BUBBLE CELL
(SCHEMATIC SAME AS 2ND BUBBLE CELL) (REFERENCE DESIGNATIONS ARE 700 SERIES)
7TH BUBBLE CELL
(SCHEMATIC SAME AS 2ND BUBBLE CELL) (REFERENCE DESIGNATIONS ARE 800 SERIES)
8TH BUBBLE CELL
U1 7220
U100 7230
U101 7242
U102 7250
U103 7254
U104 7254
U105 7110
U200 7230
U201 7242
U202 7250
U203 7254
U204 7254
U205 7110
Q100 VN0106N3
Q200 VN0106N3
74LS04
MOT. 4MHZ CLK
RESET OUT
TM A
TM B
SWAP EN
REP EN
BOOT SWAP EN
BOOT EN
WAIT
D0 D1 D2 D3 D4 D5 D6 D7
A0
RD
WR
DACK
DRQ
INT
RESET
BUS RD
DET ON
CS
SYNC
D10
SHIFT CLK
C/D
ERR FLG
SYS CLK
DATA OUT B
DATA OUT A
SELECT IN
ENABLE A
ENABLE B
SELECT OUT
DET A+
DET A-
DET B+
DET B-
PWR FAIL
SWAP
GEN B
GEN A
REP B
REP A
BOOT SWAP
BOOT REP
REF R
GEN EN A
GEN EN B
BOOT SW EN
PULSE C
NC
SWAP A
SWAP B
X+ OUT
X- OUT
Y+ OUT
Y- OUT
X+ IN
X- IN
Y+ IN
Y- IN
X+
X-
Y+
Y-
+5V
+12V
GND
R1 5.1K
R100 3.48K
R101 10
R104 1K
R105 1K
R106 1K
R107 1K
R108 130
R109 33K
R110 12K
R111 5.1K
R200 3.48K
R201 10
R204 1K
R205 1K
R206 1K
R207 1K
R208 130
C1 47UF 20V ±10%
C2 47UF 20V ±20%
C3 47UF 20V ±10%
C4 0.1UF 50V
C100 15UF
C101 15UF
C102 15UF 50V
C103 0.1UF
C104 120PF 500V,5%
C105 120PF 500V,5%
C106 15UF
C107 2.2UF,20V
C108 1.0UF 20V
C200 15UF
C201 15UF
C202 15UF 50V
C203 0.1UF
C204 120PF 500V,5%
C205 120PF 500V,5%
C206 15UF
1000PF
J1/32 J2/32
J1/36 J2/36
J1/34 J2/34
J2/20
J1/24
J1/22
J2/23
J1/18
J1/16
J1/6
J1/8
J1/12
J1/14
J2/4
J2/6
J1/30
J1/28
J1/26
J2/10
J2/14
J2/18
J1/4
J2/16
J2/12
REVISIONS
A INCORPORATED 2453/HAUSER 1587
B UPDATED 2453/HAUSER 1587
C REVISED J1 & J2 PIN DESIGNATIONS ADDED CAPACITORS LANDIS 2455/HAUSER 1587
D REVISED-ADDED CAPACITORS 2453/HAUSER 1587

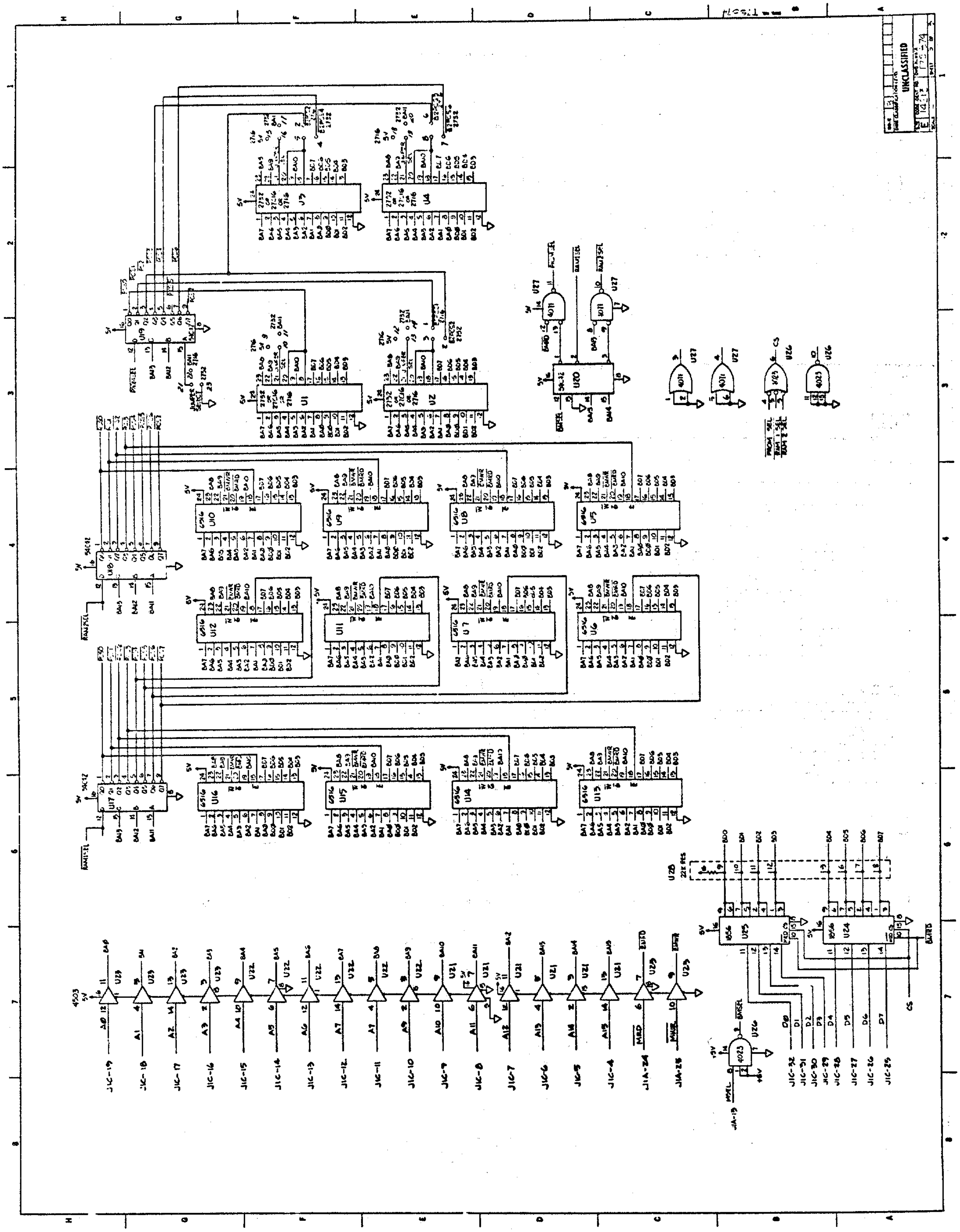UNCLASSIFIED
U1
U2
U3
U4
U5
U6
U7
U8
U9
U10
U11
U12
U13
U14
U15
U16
U17
U18
U19
U20
U21
U22
U23
U24
U25
U26
U27
U28
U29
2732
2716
6516
74C42
4011
4023
4503
1856
22K RES
5V
RAMSEL
PROMSEL
CS
D0
D1
D2
D3
D4
D5
D6
D7
A0
A1
A2
A3
A4
A5
A6
A7
A8
A9
A10
A11
A12
A13
A14
A15
MRD
MWR
BWR
BRD
J1C-4
J1C-5
J1C-6
J1C-7
J1C-8
J1C-9
J1C-10
J1C-11
J1C-12
J1C-13
J1C-14
J1C-15
J1C-16
J1C-17
J1C-18
J1C-19
J1C-25
J1C-26
J1C-27
J1C-28
J1C-29
J1C-30
J1C-31
J1C-32
J1A-19
J1A-24
J1A-26

RAM Board

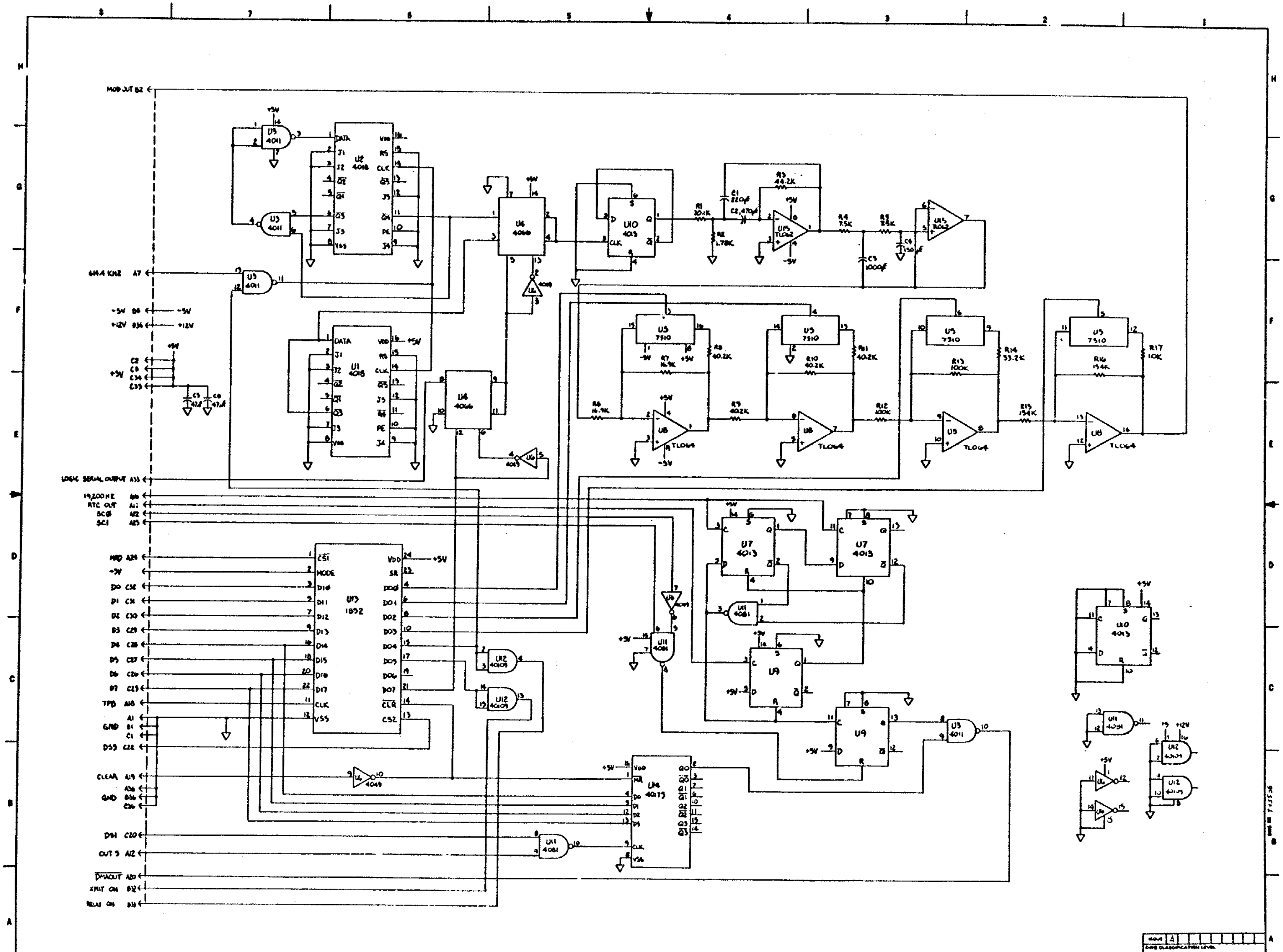

Modulator Board

DESIGN AGENCY CONTROL NO.	ISSUE	DESCRIPTION PREPARED BY	DATE	CHKR	ENGR
T90402-000	A	DMARTIN, EG&G/J. LOCHTFELD, 7597	10 Nov 82		

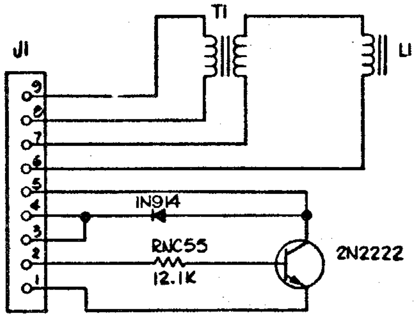

AGENCY APPROVALS

DWG	DATE	INITIALS

SHEET 1

ISSUE A

SHEET INDEX

PART CLASSIFICATION

DWG. CLASSIFICATION LEVEL
UNCLASSIFIED

TITLE
SCHEMATIC,
TRANSDUCER MATCHING
& SWITCHING BRD

SIZE C
CODE IDENT. NO. 14213
DWG. NUMBER CK-T90402

SCALE 2/1
SHEET 1 OF 1

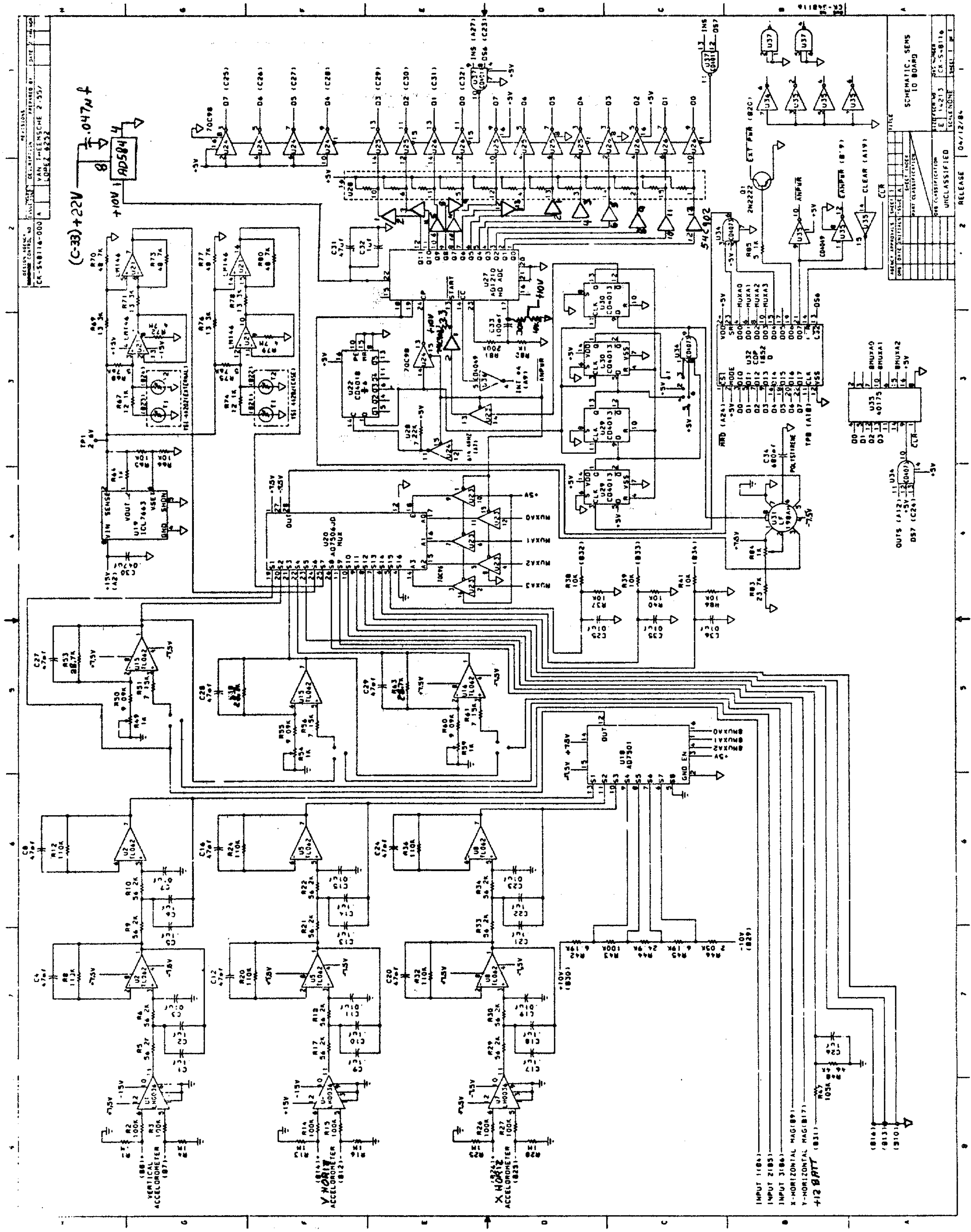
SCHEMATIC, SEMS
IO BOARD
E 14213 CK-S-8116
SCALE NONE SHEET 1 OF 1
UNCLASSIFIED
RELEASE 04/12/84
CK-S48116-000
VAN THEEMSCHE 2-55/
LOPEZ 8232
VERTICAL ACCELEROMETER
Y HORIZ ACCELEROMETER
X HORIZ ACCELEROMETER
U18 AD7501
U20 AD7506JD MUX
U27 AD1210 MD ADC
U32 CDP 1852 D
U19 ICL7663
AD584
(C-33) +22V
.047μf
+10V
54C902
EXT PWR (B20)
Q1 2N2222
AMPWR
CLEAR (A19)
INPUT 1(B4)
INPUT 2(B5)
INPUT 3(B6)
X-HORIZONTAL MAG(B9)
Y-HORIZONTAL MAG(B17)
+12 BATT

DWG CLASSIFICATION LEVEL

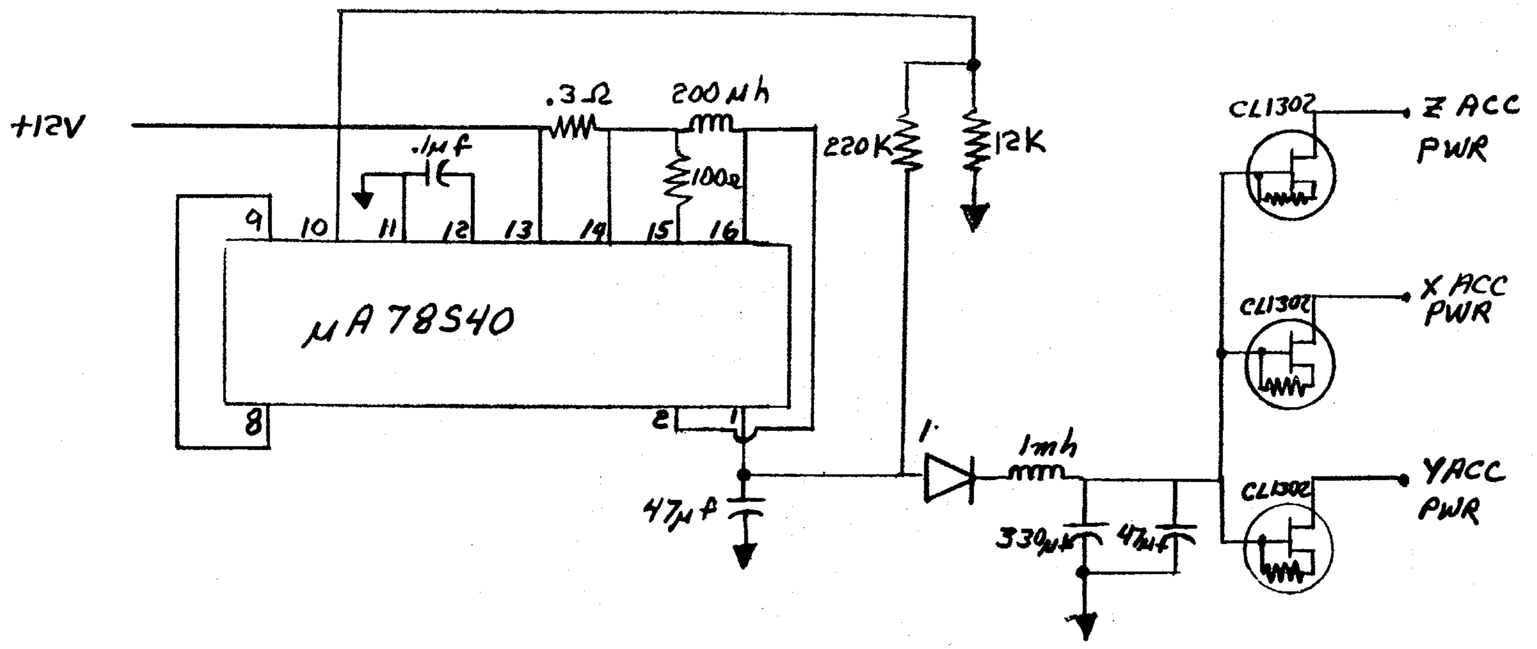

Schematic Accelerometer Power Supply

DESIGN AGENCY CONTROL NO.	ISSUE	DESCRIPTION / PREPARED BY	DATE	CHKD	ENGR
CK-T75862-000	A	QUARTIN, EG&G / J. LOCHTFELD, 15			[illegible]
	B	ADDED COMPONET VALUES	1-10-82		[illegible]

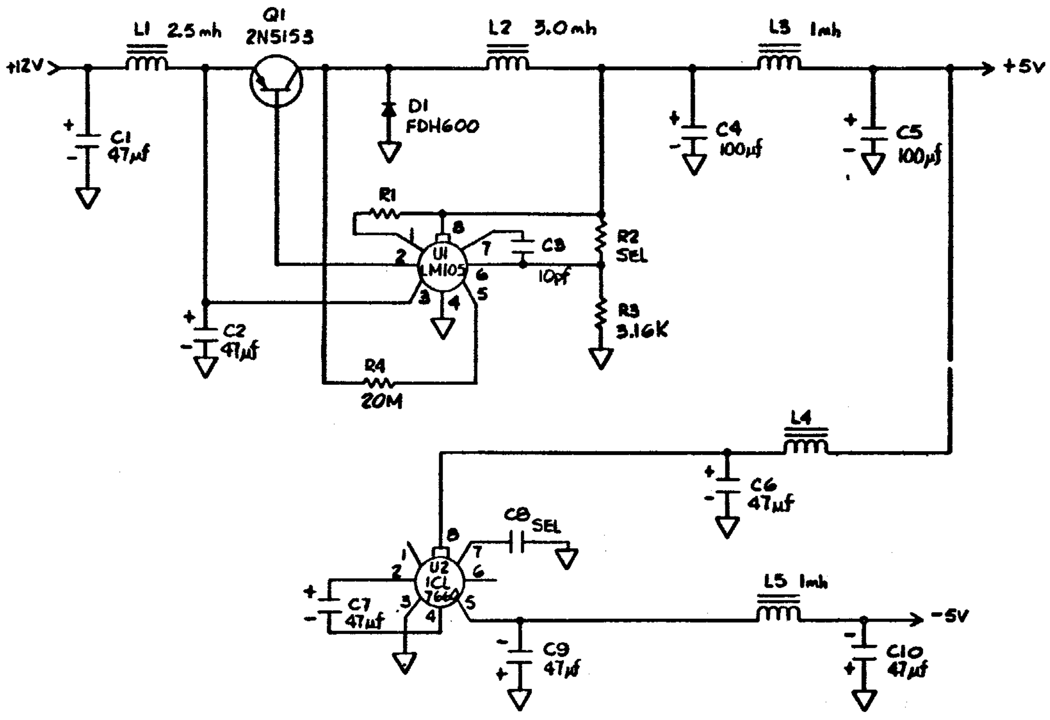

AGENCY APPROVALS			SHEET	1
OGG	DATE	INITIALS	ISSUE	B
			DWG. CLASSIFICATION LEVEL	UNCLASSIFIED

TITLE SCHEMATIC,
SEMS ± 5 VOLT
POWER CONVERTER

SIZE	CODE IDENT. NO.	DWG. NUMBER
C	14213	CK-T75862

SCALE — SHEET 1 OF

DESIGN AGENCY CONTROL NO.
CK-T87963-000

REVISIONS

ISSUE	DESCRIPTION / PREPARED BY	DATE	CHKD	ENGR
A	B MONTAÑO, EG&G / J LOCHT.. LD, SANDIA	8-23-82		
B	MOVED C2 TO LEFT SIDE OF T2 WAS ON RIGHT SIDE.	20 OCT 82		

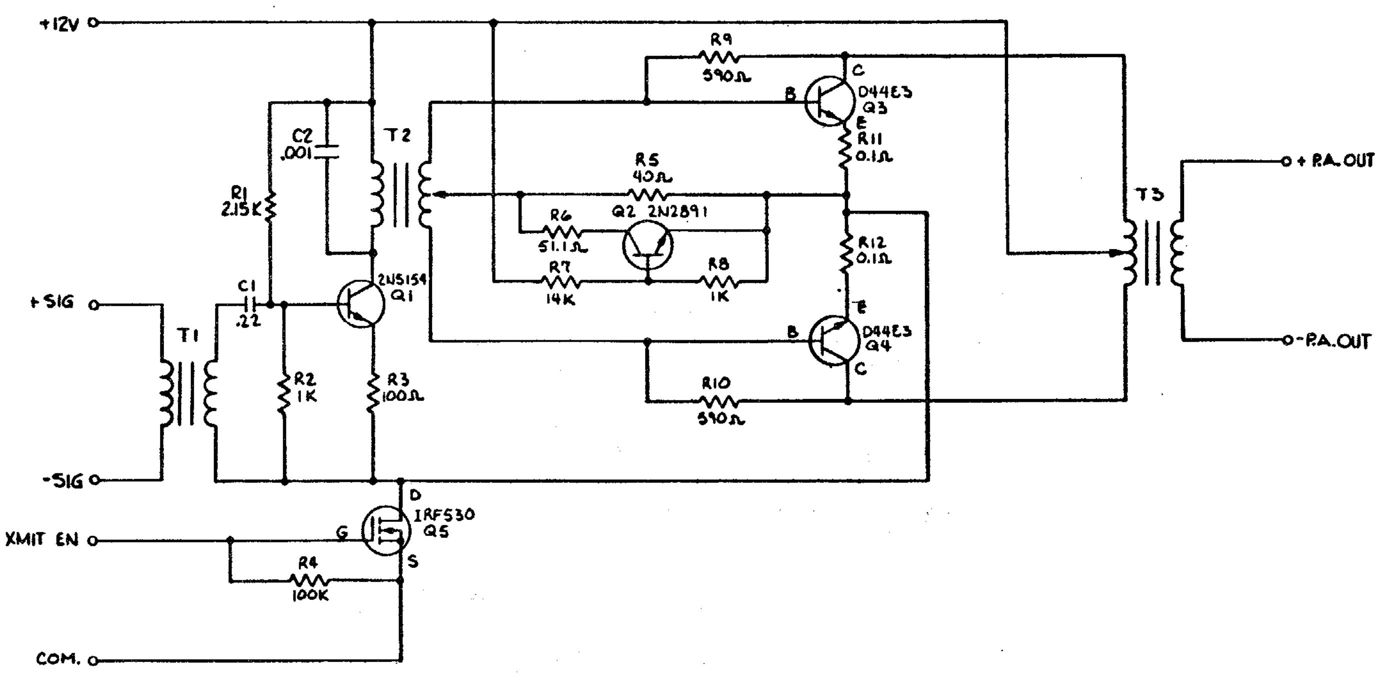

AGENCY APPROVALS			SHEET	1
ORG	DATE	INITIALS	ISSUE	B

SHEET INDEX

PART CLASSIFICATION

DWG. CLASSIFICATION LEVEL

UNCLASSIFIED

TITLE

SCHEMATIC,
SEMS POWER AMPLIFIER

SIZE	CODE IDENT. NO.	DWG. NUMBER
C	14213	CK-T87963

SCALE ~ SHEET 1 OF 1

APPENDIX B

SEMS OPERATING DESCRIPTIONS

B-1 CARS OPERATING DESCRIPTION

CARS is a test set with two main functions:

1. Taking commands from the operator and passing them to the BRES, and
2. Taking response from BRES and recording and printing the response.

Figure B-1 is a flowchart of CARS main operating code. CARS starts off with an initialization routine, a routine to get the date from the operator, a routine to get the time from the operator, a routine to display the input date and time, and then goes to a routine to wait for operator input. When a command is received from the operator, CARS branches to a routine to process the command. All command processing is similar in having the following steps:

1. Confirmation of the command by the operator;
2. Get operator data input if needed;
3. Perform the command if only a CARS command; or
4. Send the command to BRES if a BRES or DAGS command;
5. If the command was sent to BRES,
    a. Wait for response from BRES,
    b. Record response from BRES on tape;
6. Print results of command, and
7. Wait for next operator command.

Section B-4 contains a list of DAGS operating commands.

COMMAND AND RECORDING SYSTEM (CARS)

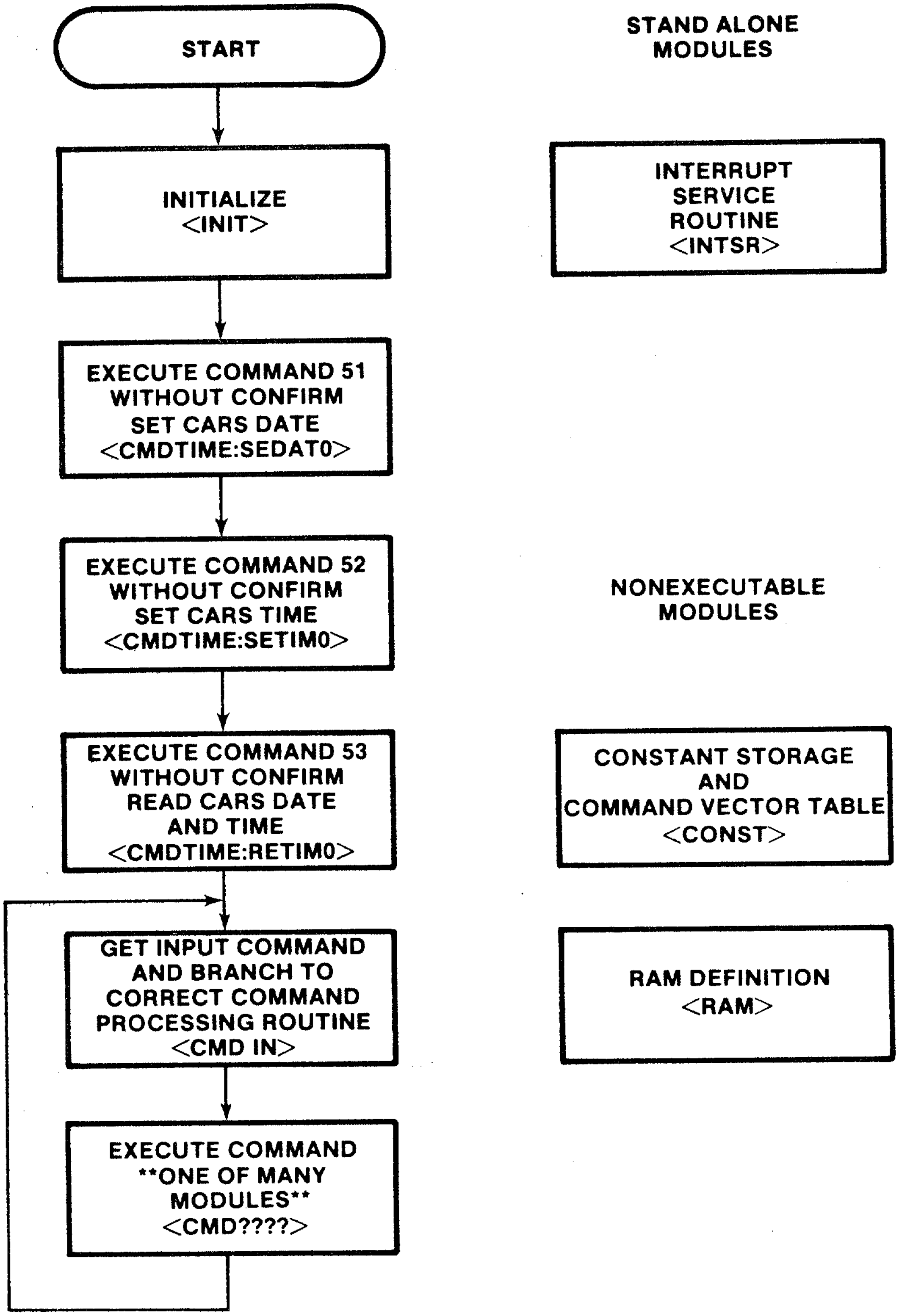

Figure B-1. CARS System Flowchart

B-2 BRES OPERATION DESCRIPTION

BRES is a repeater package on a buoy to transfer commands and data between CARS and DAGS.

Figure B-2 is a flowchart of BRES main operating code. It starts off with an initialization routine and then goes into a routine which waits for a command from CARS. When a command is received, BRES branches to a routine to process the command.

Communication between CARS and DAGS is performed by BRES as follows:

1. A command is received from CARS;
2. The command is reformatted and sent to DAGS via acoustic telemetry;
3. BRES waits five seconds for an acoustic telemetry response from DAGS;
4. BRES sends data response from DAGS to CARS;
5. For certain commands, BRES adds its status to the end of the data message to CARS;
6. If BRES receives no response or errors from DAGS, the above steps are repeated five times if necessary to get the data error from DAGS.

Some of the commands from CARS to BRES request that BRES change its mode of operation or pass back its status. In this case, BRES does not communicate with DAGS.

Figure B-2. BRES System Flowchart

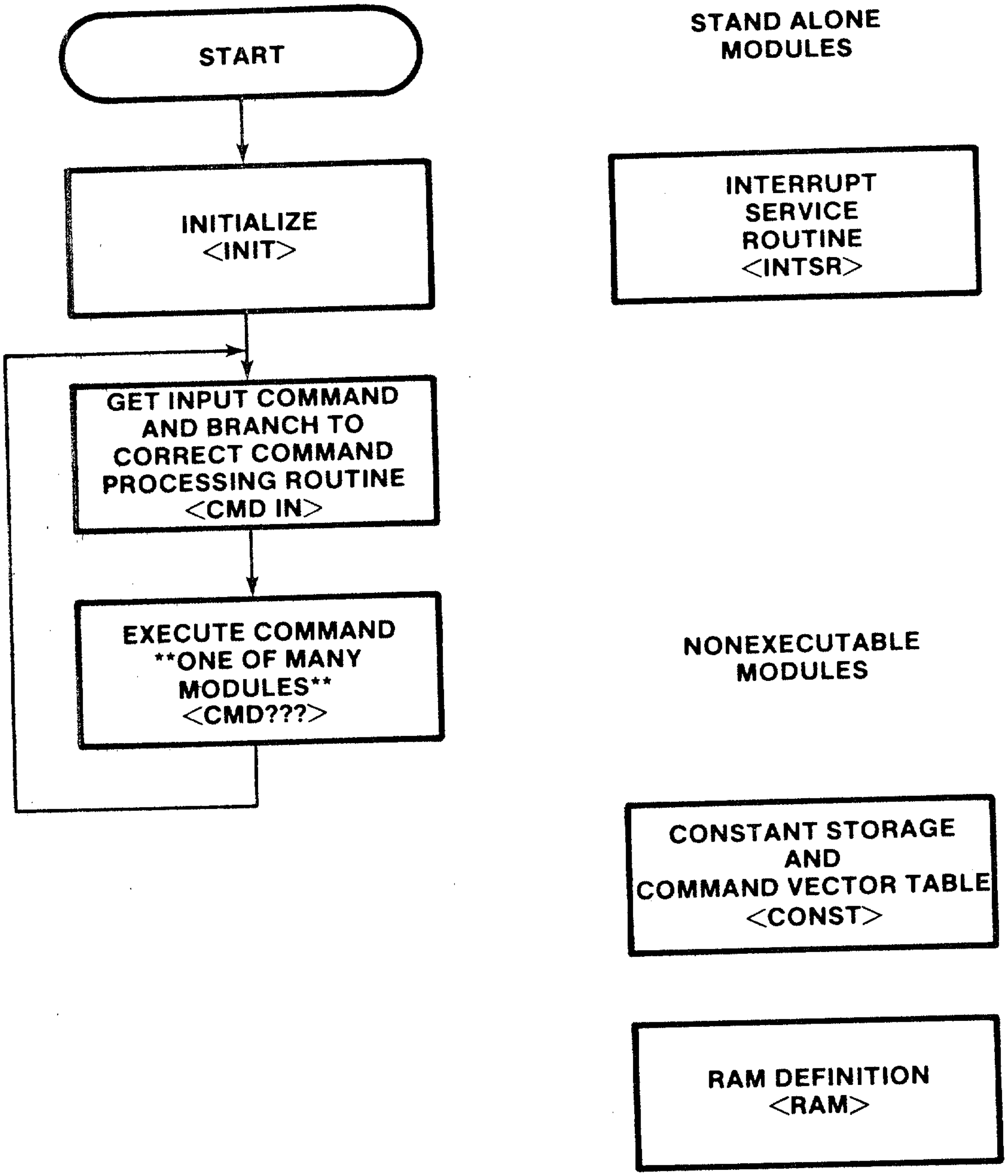

B-3 DAGS OPERATION DESCRIPTION

DAGS is the subsurface package which does the following:

1. Receives commands from BRES;
2. Gathers data; and
3. Sends data to BRES.

Figure B-3 is a flowchart of DAGS main operating code. It starts with an initialization routine and then goes into a data gathering routine which can also receive a command from BRES via acoustic telemetry. When a command is received, DAGS branches to a routine to process the command. All command processing is similar in having the following steps:

1. The command must have no errors before it will be executed;
2. The mode send by the command is stored or the data requested by the command is read;
3. The mode or data response is encoded for the acoustic telemetry link;
4. The response is sent to BRES via the acoustic telemetry link; and
5. If DAGS is in the process of transferring data to or from Bubble Memory, the command is ignored.

Figure B-4 is a detailed logic flowchart of the data gathering routine (DGATH).

Figure B-3 DAGS System Flowchart

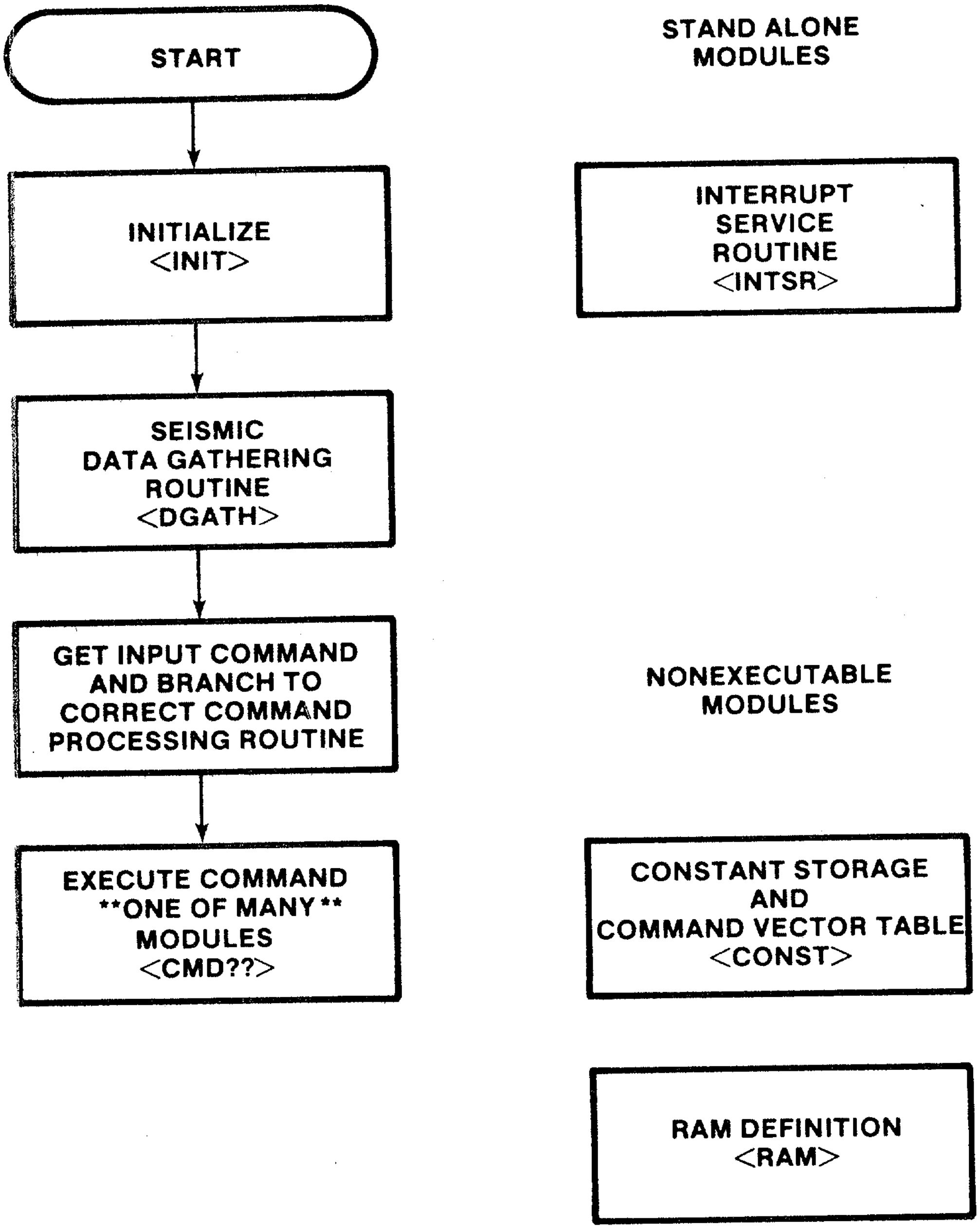

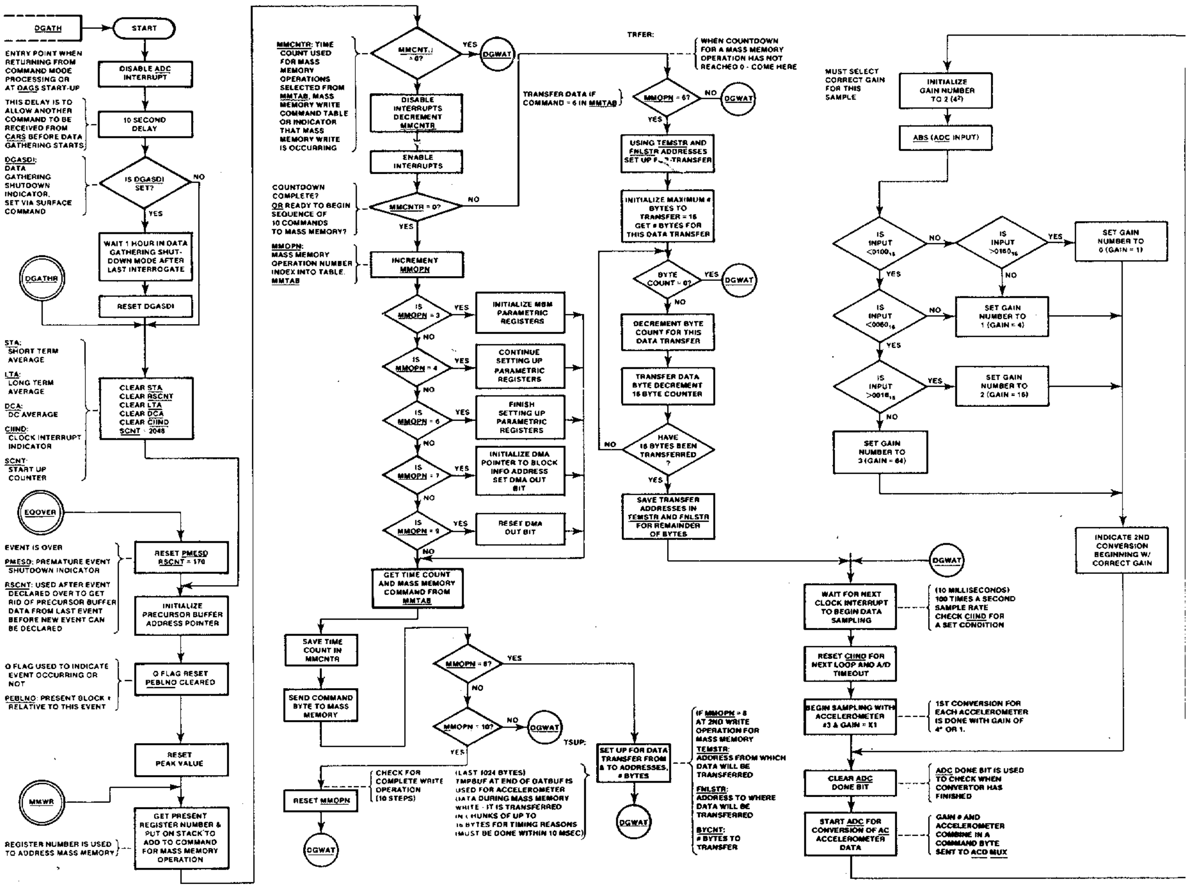
DGATH
START
ENTRY POINT WHEN RETURNING FROM COMMAND MODE PROCESSING OR AT DAGS START-UP
DISABLE ADC INTERRUPT
THIS DELAY IS TO ALLOW ANOTHER COMMAND TO BE RECEIVED FROM CARS BEFORE DATA GATHERING STARTS
10 SECOND DELAY
DGASDI: DATA GATHERING SHUTDOWN INDICATOR. SET VIA SURFACE COMMAND
IS DGASDI SET?
NO
YES
WAIT 1 HOUR IN DATA GATHERING SHUT-DOWN MODE AFTER LAST INTERROGATE
DGATHR
RESET DGASDI
STA: SHORT TERM AVERAGE
LTA: LONG TERM AVERAGE
DCA: DC AVERAGE
CIIND: CLOCK INTERRUPT INDICATOR
SCNT: START UP COUNTER
CLEAR STA
CLEAR RSCNT
CLEAR LTA
CLEAR DCA
CLEAR CIIND
SCNT · 2048
EQOVER
EVENT IS OVER
PMESD: PREMATURE EVENT SHUTDOWN INDICATOR
RSCNT: USED AFTER EVENT DECLARED OVER TO GET RID OF PRECURSOR BUFFER DATA FROM LAST EVENT BEFORE NEW EVENT CAN BE DECLARED
RESET PMESD RSCNT = 170
INITIALIZE PRECURSOR BUFFER ADDRESS POINTER
Q FLAG USED TO INDICATE EVENT OCCURRING OR NOT
PEBLNO: PRESENT BLOCK # RELATIVE TO THIS EVENT
Q FLAG RESET PEBLNO CLEARED
RESET PEAK VALUE
MMWR
REGISTER NUMBER IS USED TO ADDRESS MASS MEMORY
GET PRESENT REGISTER NUMBER & PUT ON STACK TO ADD TO COMMAND FOR MASS MEMORY OPERATION
MMCNTR: TIME COUNT USED FOR MASS MEMORY OPERATIONS SELECTED FROM MMTAB, MASS MEMORY WRITE COMMAND TABLE OR INDICATOR THAT MASS MEMORY WRITE IS OCCURRING
MMCNTR = 0?
YES
DGWAT
DISABLE INTERRUPTS DECREMENT MMCNTR
ENABLE INTERRUPTS
COUNTDOWN COMPLETE? OR READY TO BEGIN SEQUENCE OF 10 COMMANDS TO MASS MEMORY?
MMCNTR = 0?
NO
YES
MMOPN: MASS MEMORY OPERATION NUMBER INDEX INTO TABLE. MMTAB
INCREMENT MMOPN
IS MMOPN = 3
YES
INITIALIZE MBM PARAMETRIC REGISTERS
NO
IS MMOPN = 4
YES
CONTINUE SETTING UP PARAMETRIC REGISTERS
NO
IS MMOPN = 6
YES
FINISH SETTING UP PARAMETRIC REGISTERS
NO
IS MMOPN = 7
YES
INITIALIZE DMA POINTER TO BLOCK INFO ADDRESS SET DMA OUT BIT
NO
IS MMOPN = 9
YES
RESET DMA OUT BIT
NO
GET TIME COUNT AND MASS MEMORY COMMAND FROM MMTAB
SAVE TIME COUNT IN MMCNTR
SEND COMMAND BYTE TO MASS MEMORY
MMOPN = 8?
YES
NO
MMOPN = 10?
NO
DGWAT
YES
TSUP:
CHECK FOR COMPLETE WRITE OPERATION (10 STEPS)
RESET MMOPN
DGWAT
(LAST 1024 BYTES) TMPBUF AT END OF DATBUF IS USED FOR ACCELEROMETER DATA DURING MASS MEMORY WRITE - IT IS TRANSFERRED IN CHUNKS OF UP TO 16 BYTES FOR TIMING REASONS (MUST BE DONE WITHIN 10 MSEC)
SET UP FOR DATA TRANSFER FROM & TO ADDRESSES, # BYTES
DGWAT
IF MMOPN = 8 AT 2ND WRITE OPERATION FOR MASS MEMORY
TEMSTR: ADDRESS FROM WHICH DATA WILL BE TRANSFERRED
FNLSTR: ADDRESS TO WHERE DATA WILL BE TRANSFERRED
BYCNT: # BYTES TO TRANSFER
TRFER:
WHEN COUNTDOWN FOR A MASS MEMORY OPERATION HAS NOT REACHED 0 - COME HERE
TRANSFER DATA IF COMMAND = 6 IN MMTAB
MMOPN = 6?
NO
DGWAT
YES
USING TEMSTR AND FNLSTR ADDRESSES SET UP FOR TRANSFER
INITIALIZE MAXIMUM # BYTES TO TRANSFER = 16 GET # BYTES FOR THIS DATA TRANSFER
BYTE COUNT = 0?
YES
DGWAT
NO
DECREMENT BYTE COUNT FOR THIS DATA TRANSFER
TRANSFER DATA BYTE DECREMENT 16 BYTE COUNTER
HAVE 16 BYTES BEEN TRANSFERRED ?
NO
YES
SAVE TRANSFER ADDRESSES IN TEMSTR AND FNLSTR FOR REMAINDER OF BYTES
MUST SELECT CORRECT GAIN FOR THIS SAMPLE
INITIALIZE GAIN NUMBER TO 2 (4²)
ABS (ADC INPUT)
IS INPUT <0100₁₆
NO
IS INPUT >0160₁₆
YES
SET GAIN NUMBER TO 0 (GAIN = 1)
YES
NO
IS INPUT <0060₁₆
NO
SET GAIN NUMBER TO 1 (GAIN = 4)
YES
IS INPUT >0016₁₆
YES
SET GAIN NUMBER TO 2 (GAIN = 16)
NO
SET GAIN NUMBER TO 3 (GAIN = 64)
INDICATE 2ND CONVERSION BEGINNING W/ CORRECT GAIN
DGWAT
WAIT FOR NEXT CLOCK INTERRUPT TO BEGIN DATA SAMPLING
(10 MILLISECONDS) 100 TIMES A SECOND SAMPLE RATE CHECK CIIND FOR A SET CONDITION
RESET CIIND FOR NEXT LOOP AND A/D TIMEOUT
BEGIN SAMPLING WITH ACCELEROMETER #3 & GAIN = X1
1ST CONVERSION FOR EACH ACCELEROMETER IS DONE WITH GAIN OF 4° OR 1.
CLEAR ADC DONE BIT
ADC DONE BIT IS USED TO CHECK WHEN CONVERTOR HAS FINISHED
START ADC FOR CONVERSION OF AC ACCELEROMETER DATA
GAIN # AND ACCELEROMETER COMBINE IN A COMMAND BYTE SENT TO ACD MUX

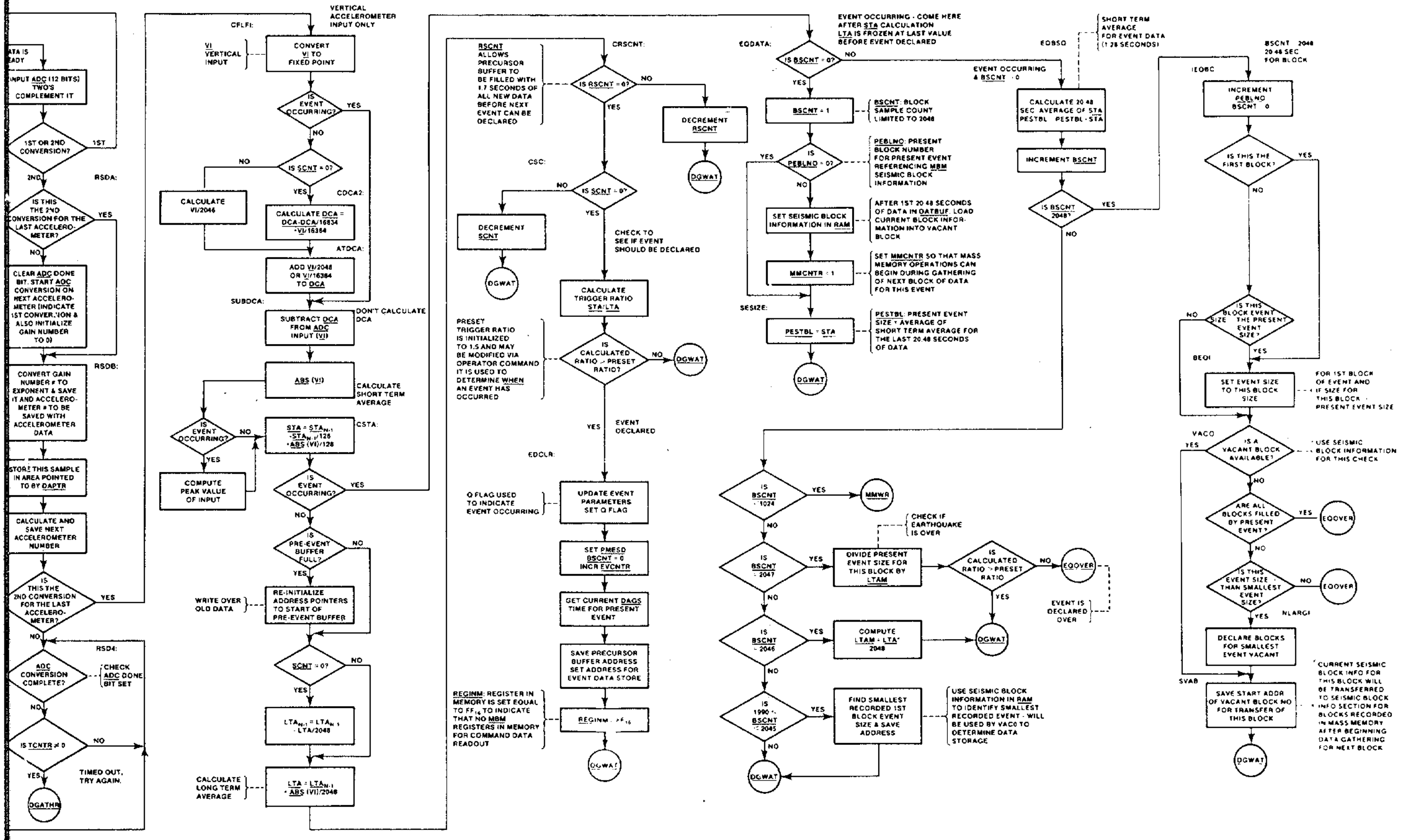

Figure B-4 DGATH System Flowchart

LIST OF COMMANDS

Command Number	Function
1.	Set DAGS Transmit Bit Rate
2.	Set DAGS Transmit Power Level
3.	Set DAGS Time to CARS Time
4.	Read DAGS Time
5.	Set Command 6 Data Byte Count
6.	Send Fixed Data Pattern
7.	Set Pulse/CW Transmit Power Parameters
8.	Transmit Pulse/CW at 'Zero Frequency
9.	Transmit Pulse/CW at 'One' Frequency
10.	System Cycle-Transmit Known Data
11.	Set DAGS Data Gathering Mode
12.	Read Reference Voltage
13.	Read Magnetometers
14.	Read Accelerometers
15.	Does Not Exist
16.	Read Battery Voltage
17.	Read Analog Date
18.	Turn Analog Power Off
19.	Turn Analog Power On
20.	Read DAGS Seismic Status
21.	Read DAGS Seismic Data
22.	Reset Seismic Trigger Ratio
23.	Reset Seismic Shutdown Ratio
24.	Declare DAGS Memory Block Bad
25.	Clear Mass Memory
26.	Read DAGS Short Status
27.	Does Not Exist
28.	Release DAGS Buoy
29.	Does Not Exist
30.	Does Not Exist
31.	Set DAGS Number
32.	Set BRES Acoustic Transmit Power Level
33.	Does Not Exist
34.	Does Not Exist
35.	Read BRES Status
36.	Does Not Exist
37.	Set BRES Pulse/CW Parameters
38.	Command BRES to Send Pulse/CW at Low Frequency
39.	Command BRES to Send Pulse/CW at High Frequency
50.	Set CARS Time to WWV Time
51.	Set CARS Date
52.	Set CARS Time
53.	Read CARS Data and Time
54.	Toggle Print Display Switch
55.	Toggle Print Receive Data Switch
56.	Does Not Exist
57.	Does Not Exist
58.	Does Not Exist
59.	Does Not Exist
60.	Does Not Exist
61.	Start Mag Tape Recording
62.	Stop Mag Tape Recording
63.	Rewind Mag Tape

APPENDIX C

SHELL SEMS DEPLOYMENT

Introduction

One objective of the SEMS program is to develop a placement technique of the seafloor unit that is easily implemented and yet does not compromise the objective of obtaining uninfluenced soil response to seismic activity. This section is the unaltered report submitted by Geomarex Incorporated of La Jolla, California. Sandia contracted Geomarex, a company with extensive experience in marine coring and drilling, to help design and implement a remote implacement technique. The report is a thorough treatment of the design considerations, problems encountered, and recommendations for future deployments.

This report reviews the approach selected, the problems encountered, and the solutions implemented for the placement of the SEMS probe off Long Beach May 14, 1985, near the Shell platforms ELLEN and ELLY around 33°35'13"N and 118°7'56"W. It also submits suggestions for the future placement of similar probes.

PLACEMENT OF THE SANDIA SEMS PROBE
LONG BEACH, MAY 14, 1985

Andre Rossfelder
Geomarex, Inc.

June 4, 1985

1. SELECTION OF THE PLACEMENT PROCEDURE

The task consisted in implanting a seismic sensor and its cable as vertically as possible into the seafloor a short distance away from the its electronic package (SEMS). The choice was between a placement at some 10-12 feet deep directly under the electronic package and a placement at some 6 feet deep 10 to 15 feet away from the package. The choice was also between a fully remote-controlled operation, naturally leading to a compact system with the probe directly implanted under the electronic package, and a manned operation with diver or UW-vehicle or ROV assistance, naturally leading to a multi-step operation with the probe implanted at a short distance away from the electronic package.

The remote-controlled operation had some obvious advantages because the overall system could be envisioned as a single package deployed with a single cable without need for diver or vehicle assistance, except for possible visual monitoring. It implied however some significant expenses and leetime for design, development, and testing. It was therefore decided to rely on a manned placement, with the probe being manually inserted in a hole bored near the SEMS Seafloor Unit.

Early in the project, during the initial demonstration of GEOMAREX P-4 Vibrocorer, it was recognized that the sensing probe being developed by SANDIA would not withstand the acceleration resulting from the vibrations. Therefore, the simple solution of sinking the probe into the seafloor with a corrodable (magnesium) shaft under vibration was discarded and a multi-step operation considered: (1) boring the hole; (2) implanting the probe; and (3) filling or collapsing the hole.

Other means than vibration were discussed (gravity thrust, hydraulic piston thrust, high-pressure jetting), but it was feared that they would result either in failure to penetrate or in cratering and failure to close back the hole. Similarly, in order to avoid a multi-step operation and its potential difficulties, we looked into a solution combining vibration and high-pressure jetting, with the probe installed at the front ends of the driving tube on vibration-dampening mounts and the sediment evacuated behind it by a water jet confined within the tube itself in order to minimize the cratering around it. However, this preferred approach was leading us back to the increased expenses and delays of a remote-controlled system.

Another consideration was the probability that the hole would collapse after withdrawal of the coretube thus preventing the subsequent insertion of the probe. At least three solutions were discussed. Two leading to more design or operational complexities: Filling the hole with heavy drilling mud while the coretube was withdrawn or assisting the penetration of the probe in the collapsed hole with limited water jetting. A third one which appeared the simplest: Leaving a temporary casing in the hole after withdrawing the coretube. This is the solution finally selected. We may retrospectively say that it was much less simple than expected, as later discussed, and that a jetting attachment handled by the submarine and fed with a hole from the vessel to force the probe into an uncased hole would have probably been a more satisfactory choice.

Finally, it was decided that in view of the water-depth (260 feet) and the risk that unexpected complications may lead to a bottom time of several hours, a small manned underwater vehicle was to be preferred to diver assistance. ROVs were not considered because of payload limitations and marginal cost advantages, if any.

So, at this point the placement operation was envisioned as follows:

- A first core will be taken with the P-4 vibrocorer and the resulting boring visually inspected and possibly tested to see if the hole was staying sufficiently open for inserting the probe. In such case the operation will be conducted without casing. Otherwise a split casing will be left in the hole. The actual placement operation will follow this initial ground check.

- The SEMS Unit, with the probe ready to be handled by the submarine crew, will be lowered simultaneously with the P-4 Vibrocorer, complete with its weightstand and buoyancy package, so that they reach together the seafloor about 10-12 feet apart.

- The placement hole will be bored with the P-4 with a 12 foot long 5 inch diameter coretube. If, from the findings of the initial core hole, the hole is expected to collapse, a split-casing will be left in the hole. The casing will be split-open all the way, leaving a passage of 1 inch wide along which the probe umbilical can run when the casing will be later withdrawn. After boring the hole and placing the split casing, the P-4 with its core will be retrieved aboard, or, alternately, moved away from the SEMS area and left there until completion of the other tasks.

- The submarine crew will remove the probe from the SEMS unit, place it with a removable handle in the hole and attach a retrieving line to the casing. The casing will then be withdrawn and pulled back aboard the support vessel. The UW vehicle will pour a sand bag or shove sediment in the hole. All operations being completed and the UW vehicle at a safe distance, an explosive cable-cutter will be actuated and release the vessel wire-line from the SEMS unit.

2. MAIN DESIGN AND PROCEDURAL PROBLEMS

Two series of difficulties were expected with the procedure:

- How to lower and to position side by side the SEMS and the P-4 Vibrocorer with the drawworks normally available on oceanographic or similar vessels?

- In the event the test hole collapses and a split-casing is needed, how to reliably sink it, then separate it from the coretube upon withdrawal of the P-4 and how to later withdraw the casing itself without interfering with the probe or its cable.

The solution to the first problem was directly devised aboard the support vessel "Glorita" at the time of the placement. The SEMS and the P-4 were linked with a 10-foot polypropylene line installed in a shorter PVC tubing so as to constrain the two units within a maximum and a minimum distance one from each other. In due time, the UW vehicle crew will pull a pin to release this link. The simultaneous handling of the two units was significantly simplified by a 1/2-inch Kevlar line brought by the SANDIA team. This allowed us to use the same winch, the SEMS Unit being handled by the steel wire-line on the main winch drum and the P-4 being manually handled with the kevlar line over one of the winch dollies. The lines going through two separate sheaves on the same stern A-frame were consequently parallel and they were tagged from place to place so that their respective motions could be visually monitored and matched.

The solution to the second problem proved to be much more difficult than anticipated. It required a protracted effort of design, manufacturing, tests and modifications of alternate casings and parts, without leading to a conclusion that we can claim to be reliable and satisfactory.

It may be useful to review the difficulties encountered in this search of an optimum solution:

- Casing Material:

The design provided for a 11-1/4 foot long casing shell to fit around the 12 foot long 5 inch OD steel coretube and to be split from top to bottom with a 1-inch passage for the probe cable. This supposed a tubing material of about 5.030 inch to 5.060 inch ID. As no such material with appropriate wall thickness existed off-the-shelf, we relied upon the dimensional changes that may affect existing tubes when split longitudinally. The results were relatively unpredictable even with material of same type and origin. We experimented with drawn and extruded aluminum, CREW aluminized carbon steel, HREW and DOM mechanical carbon steel and PVC 5 inch pipe class 160. No material retained its dimensional stability, some closing too much, other opening up too much. The two materials finally selected were:

(A) 5.00 OD .052 inch wall extruded aluminum 6063-T6, construction grade. It closed significantly but could be maintained adequately open with reinforcing rings consisting of the core-nose itself at the bottom, a riveted spreading ring at mid-height and the retrieving ring at the top.

(B) 5.25 inch OD .125 inch wall DOM mechanical carbon steel. It opened up to 5.456 inch OD but the 5.180 inch ID was deemed acceptable.

The aluminum split-casing A with its reinforcing rings offered a good snug fit and because of its light weight, it could be handled with a minimal risk of falling from the coretube. We however had some misgivings about the way it would resist to the ground pressure and how its slot may close and pinch the umbilical probe cable.

The carbon steel casing B offered a loose yet acceptable fit. Its weight (80 pounds) was such that it would have normally fallen from the coretube. Consequently, it required a weak-link arrangement (supporting strings) to hold it until the vibro-head was actuated. It was expected to adequately withstand the ground wall pressure and to properly maintain its slot open during withdrawal.

Two units of each casing were prepared. The aluminum casing A was mostly used during the test and one damaged as a result. So two steel casings and one aluminum casing were available for the SEMS placement.

- Means to hold back the casing in the ground upon withdrawal of the coretube:

The initial designs relied on barbs (steel blades directed upward) riveted or welded on the casing to hold it in the ground when the coretube was withdrawn. Also a hinged fluke was tested. It became rapidly evident that this approach was unreliable because the resistance of the soil against the barbs or the fluke would not overcome the force necessary to separate the casing from the coretube when they become gripped against each other by sand or by the ground wall pressure.

The new design relied on the weightstand itself to hold back the casing. At first, a crown of barbs was riveted toward the top of the split casing and designed in such a way that it will retract when moving down into the guide tube of the weightstand; but spring back and catch the bottom of the tube when pulled up. The device proved to be still too weak and unsatisfactory and its principle was turned around. The guide-tube was provided with blade barbs directed downward which would engage on the upper retrieving ring of the casing upon full penetration and hold it back in the ground while the coretube would be withdrawn. In an alternate design a set of six spring-loaded catches mounted inside the guidetube were to have the same function. However, the test of the barb-locking arrangement with the aluminum casing A proved to be satisfactory and this simpler design was retained.

The final arrangement and its planned operation are illustrated in Figure 1.

This prolonged process of iterative design changes and field tests around the casing and its separation from the coretube left us with no sufficient time and opportunity to properly respond to the last critical question: will we be able to withdraw the split-casing upon the placement of the probe without interfering with the probe itself and particularly with its cable, and without pulling one or the other back toward the surface? The sequence of events of the placement operations did not let us to go to this point and to know the answer, as unexpected difficulties finally prevented the proper implantation of the split-casings.

3. PLACEMENT OPERATIONS

The support of the operations at sea was arranged through GEOCUBIC, Ventura, California (Jim Vernon and Rich Slater) which provided for the support of the R/V GLORITA (Tom Crawford skipper) and of the mini-submarine NEKTON (manned by Rich Slater and Doug Privitt). Aside from SANDIA personnel, the surveyor and a SHELL observer, our own GEOMAREX personnel included Andre Rossfelder, Randy Pollock, Dick Wilkins, Kevin Kelly, and Tony Jones.

The first operation, consisting of taking a core with the P-4 using a 15 foot long 5 inch diameter thin wall aluminum corebarrel, was successful with rapid penetration and recovery. However, after the sediment cloud had settled, the NEKTON crew was unable to relocate the hole, leading us to conclude that it had possibly collapsed and closed.

With this consideration in mind, the first attempt to actual placement was done with the heavy steel casing 1B, which would resist better than the lighter aluminum casing to the pressure and collapse of the wall. Unfortunately, the P-4 had to be maintained hanging in the water a short time while the SEMS platform was being handled, and we discovered later that the heavy split-casing had cut its support strings and fell most likely during this short delay under the effect of the heave.

The coring operation was conducted without yet knowing the loss of the casing. The submarine observers reported a very fast and complete penetration of the coretube. However, after the sediment cloud had settled, they could not see the casing protruding anywhere from the seafloor and, once again, they looked for the hole in vain despite the guidance now provided by the SEMS unit. They however observed a slight discolored depression which could have been the hole. They also came across the casing laying in the vicinity of the site.

The second placement attempt was conducted with a light aluminum split-casing after having hoisted and refitted the whole system. The submarine crew reported this time a very slow and difficult penetration - about two minutes per foot instead of two seconds or so. It was evident that the casing was drastically dampening the vibrations and wasting the energy, something which had already been noticed but at a lesser extent during the tests in Mission Bay and Long Beach harbor.

Toward the end of this protracted operation, and after a misunderstood indication from the submarine that the casing upper-ring had passed its one-way locking device, we decided to pull up the coretube. This was unfortunately a few inches too soon and the casing came back hanging halfway on the coretube, held by its mid-height spreading ring on the locking barbs of the guide tube.

The night had now come. After hastily rearranging the equipment but without bringing it aboard and emptying the coretube, a third attempt was made. This time, the submarine crew directed us to keep the vibrocorer going while the coretube was reaming and churning up and down the hole under the heave motions of the vessel. This resulted in a collapsed but soft burrow that they were able this time to relocate and in which they could push down the probe with the help of the submarine movements and thrust.

This narrative illustrates a few remarks of possible interest for future similar operations:

- The implementation of a casing shell over the coretube results in a drastic reduction of the capabilities of the Vibrocorer.

- Should we have been finally successful in leaving the casing in the hole behind the coretube as planned, further problems might probably have been encountered: difficulties in inserting the probe; hole filled by sediments sucked in by the coretube upon its withdrawal; closing of the slot pinching the cable; and jamming of the probe or its cable against the casing when withdrawn. Altogether the split-casing solution proved to be not a simple and reliable one.

- Even with the guidance of the SEMS unit some ten feet away and the good visibility on the seafloor, the collapsed hole was not easy to spot. It was marked only by a slight depression and a faint discoloration of the disturbed sediment.

- After locating the hole and confirming its exact position by prodding the ground with the sensor mounted on a removable handle the submarine crew was able to push down the sensor into the collapsed hole, despite the limited thrust allowed by the submarine. Rather than developing the split-casing solution, we would have been probably more readily successful in devising a procedure to more efficiently assist the submarine crew in locating the uncased collapsed hole and inserting the probe.

- The P-4 vibrocoring system is relatively shielded from the effects of the surface swell and heave of the vessel as it is designed to operate with a slack cable. This led us to largely underestimate the effect that the swell would have in this particular case on the launching side by side of the two units (SEMS and P-4), their simultaneous lowering, and the operation of the P-4 with a relatively taut cable so that it does not get entangled on some part of the overall system. We were fortunate to have good weather and a very moderate swell. The positioning of the two basic units on the seafloor at a short given distance from each other was easily and reliably achieved. However, if both units could be operated as a single package with the SEMS acting as weightstand for the vibrocorer the handling on deck, launching and lowering would be simplified and made more safe and secure in case of bad weather conditions. (This arrangement was indeed considered during the project, but set aside when we recognized that the submarine would have difficulties in reaching the hole and placing the probe within the SEMS frame itself.)

- The choice of a manned underwater vehicle rather than divers or ROVs proved to be the right one in this particular instance in view of the demand placed upon it as far as the bottom time and the tasks which had to be performed were concerned. All taken into account, this vehicle and its crew have to be credited for the final success of the operation.

4. SUGGESTIONS FOR A FUTURE DESIGN

From the field experience provided by the tests and by the placement operation, it is evident that the operation could be made simpler and more reliable if:

- The probe embedment device and the SEMS electronic package are integrated into a single unit for the launching, lowering and placement operations until they are separated and the embedment tool is retrieved.
- The embedment of the probe is done in a single step instead of the two steps consisting of boring a hole then placing the probe.
- The shank or tube used to push the probe down into the hole does not have to be disconnected from the probe and withdrawn thus limiting the risk of jamming and pulling back the probe or its cable. This means a shank or tube made of a degradable material, e.g., corrodable magnesium.

Regarding the embedment tool and procedure, a vibrodriving device such as the P-4 vibrocorer still appears in final analysis as the best approach, to the extent that the probe is isolated from the vibrations or made to withstand them.

All the other solutions which can be considered have their own disadvantages.

Forcing the probe into the seafloor under a gravity load will require a significant and possibly excessive weight. It will also imply a strong shaft practically excluding the idea of an expandable fast-corroding material left in place. The same remarks apply to the use of a hydraulic or hydrostatic piston drive, which will similarly require a strong shaft and a sufficient gravity load to counterbalance the thrust.

Explosive or implosive firing may lead to unacceptable acceleration and to damages.

Jetting, unless confined with a casing, would result in cratering. However, in our opinion, a limited high-pressure flow used in combination with vibrodriving for the purpose of softening and moving the sediment around the probe remains a valid and acceptable solution.

Figure 2 shows the essentials of a possible design which takes into account these considerations and uses vibrodriving with high-pressure water jetting as optional complement. This design, as one may see, does not require any human intervention at depth and allows for a remote-controlled operation.

As a conclusion, this Long Beach placement operation encountered a number of failures before successfully reaching its final goal. We should however underline the fact that it could not be considered as the demonstration of a developed procedure, but only as its first full-fledged sea-tests. In this regard, it was very useful in showing us what difficulties to avoid and improvements to be done, and also very encouraging for the eventual development of a simple and reliable remotely controlled system.

APPENDIX D.

SEMS OPERATING PROCEDURES

SEMS OPERATING PROCEDURES

This section describes the procedures for interrogation of the SEMS. The procedure uses some of the commands described in the List of Commands in Appendix B.

The past interrogations have been done with the aid of a forty-foot boat, owned and operated by Undersea Graphics of Torrance, California. The equipment used for the interrogation includes the CARS and BRES packages described in sections 2.1.3 and 2.1.4 (Figures 2.5 and 2.7), and a portable WWV receiver. All equipment is stored at the Underseas Graphics facility. The WWV receiver is installed in the boat by Undersea Graphics personnel several days ahead of the anticipated interrogation and operated from an uninterruptable power source. This gives the receiver's internal clock crystal ample time to "lock in" on the WWV broadcast signal.

Upon arrival at dockside, Sandia personnel insure that all necessary equipment is onboard and operational. The BRES unit is connected to a +12 volt DC power source, usually deep cycle batteries available from the boat. Connect the CARS communications cable to BRES. This cable also supplies power to the CARS unit. Once power is applied to the CARS unit, the operator is prompted to input the date and time as shown in Figure D.1.

```
Time 10/08/86 13:15:08.04
Second and Set Time 08
Minute 15
Hour 13
Year 86
Day 8
Month 10
```

Figure D.1. Initial Date and Time Entry

The CARS printer outputs the paper downward instead of upward; therefore the data are always read from the bottom up. Once the date and time have been entered, verify that the displayed date and time are correct. If not, use commands 51 and 52 to make corrections.

Normally, CARS is in the idle state waiting for a command from the operator; CARS displays "Enter Command." To process a command enter the Command Number and press E (Enter). CARS then decodes the command and, if the command is legal, displays the object of the command. For example, if Command 51 is entered, CARS responds with "SET CARS DATE?" At this point the operator has the option to ignore the command by entering D (delete) or proceed with the command by entering C (confirm). If a C is entered, CARS requests the month, day, and year from the operator and then displays the new date. Each time a numerical value is requested the operator enters the number followed by E (enter) to delimit the data. If a D is entered, CARS ignores the command, returns to the idle state, and prompts the operator with the "Enter Command" message.

To check the tape recorder enter Command 61 (Start Tape Recording), insert a new magnetic cassette and verify that tape recording has started (the recorder will align the tape and "Tape Recording Started" message will be displayed).

Next connect the WWV receiver cable to the CARS RS-232 Port, enter Command 50 (Set CARS Time to WWV Time), enter C (confirm), and press the WWV Receiver Switch (red button). The CARS will latch and display the WWV time.

Operation of BRES is verified through use of Command 32 (SET BRES XMT PWR LEVEL). Command 32 sets the BRES transmission power level. Enter 0 for maximum power transmission. If BRES is operating properly, CARS will display the correct power level (0). If an error occurs, CARS displays the cause of the error (BRES parity error or no data received from BRES). In case of an error, check for proper cable connections and possible loose boards and then repeat the procedure.

The preceding procedures verify most operations of the onboard SEMS systems. The only untested subsystem is the acoustic data link which can only be tested when communicating with the seabottom DAGS. After proper operation of the onboard systems has been established, stop tape recording by issuing Command 62 (Stop Tape Recording) and proceed to the installation site.

Once on site connect the transducer cable to the BRES unit and from the bow of the boat insert the transducer into the water. The transducer should be submersed approximately ten feet in the water.

The next step is to establish proper communication with the DAGS. Recall that the DAGS has a communication cone angle of approximately 140°, i.e., one must be within a 630 ft diameter circle above the DAGS to receive correctly. Proceed to locate the DAGS by sending Command 10 (System Cycle) to the DAGS. With this command CARS sends an incrementing code to the DAGS via the BRES and waits for DAGS to decode the command and send the code back to the surface. If the proper communication has been established, CARS will acknowledge the correct code, increment the code, and repeat the cycle. If an error is detected in the received response, CARS displays the reason for the error and repeats the command. The most likely causes of an error are: 1) no data received, or 2) data received with parity errors. Both errors occur because the boat is not within the communication cone of the DAGS. Continue to manueuver the boat until the response to Command 10 is steady and no errors are detected. At this time release the marker buoy which the boat operator uses as a reference to remain on station while the DAGS is interrogated.

Once proper communication has been established, start tape recording (Command 61) and verify CARS is still set to WWV time by entering Command 53 (Read CARS Time) and comparing the CARS time to the WWV receiver time. Tape movement should be confirmed - signaling that data are being written onto mag tape. Next send the following set of Commands to DAGS. These are mostly status and state-of-health commands and are used to verify that DAGS is operating properly.

Command 4 - Read DAGS Date and Time
Command 16 - Read DAGS Battery Voltage
Command 13 - Read Magnetometers
Command 26 - Read DAGS Short Status
Command 20 - Read MBM Status

The last two commands provide the seismic information recorded by the DAGS since the last interrogation. The information from Command 20, part of which is reprinted below is a summary of the seismic data stored in mass memory, and is used to determine which events, if any, should be transferred from the DAGS memory to the CARS mag tape. It is important that Command 20 be received correctly since these data are used by the data reduction program to format the seismic events properly.

Recall that the mass memory storage is divided into fifty-six blocks, each of which can contain one single event twenty seconds in length or be part of a larger event. The actual mass memory is made up of eight magnetic bubble memory devices (one device has been disabled); each having the capacity for eight blocks. The operator uses the information from Command 20 to decipher and decide which data blocks are to be transferred to the surface.

Determination of whether the data from a particular block is significant may include prior knowledge of the occurrence of an earthquake, i.e., the exact time of the earthquake, or by comparing the block event size and the peak value of the event data. In the information shown below (Figure 0.2) both methods were used to determine that two and maybe three earthquakes had been recorded in mass storage. Registers four and five of MBM Device 2 contain part of two earthquakes that occurred on July 8, and July 13, 1986. As can be seen, both events had peak values and block event sizes well above the background (peak values of 7.17 and 5.95 mg's to 2.44 background; block event sizes of 0.092, and 0.78 mg's to 0.038 background). Register Four has block number three of event number nine and register five contains block number four from event number 8894. Examination of the complete listing revealed that the other two blocks of event number 90 were contained in MBM 3 Register 6 and MBM 4 Register 7 and the other blocks for event 8894 were in MBM Register 8, MBM 5 Register 3, and MBM 5 Register 7.

```
 PEAK VALUE =  1.53 MG
 LTA = 0.013 MG
 EV TIME = 07/16/86 07:45:49.84
 BLK EVENT SIZE = 0.038 MG
 BIG BLK. EVENT SIZE = 0.038 MG
 EVENT NO. =12484
 BLOCK COUNTER =     1
REG NUMBER = 8

 PEAK VALUE =  2.59 MG
 LTA = 0.011 MG
 EV TIME = 06/20/86 00:13:17.32
 BLK EVENT SIZE = 0.036 MG
 BIG BLK. EVENT SIZE = 0.038 MG
 EVENT NO. =31417
 BLOCK COUNTER =     3
REG NUMBER = 7

 PEAK VALUE =  2.44 MG
 LTA = 0.011 MG
 EV TIME = 06/21/86 05:36:58.00
 BLK EVENT SIZE = 0.038 MG
 BIG BLK. EVENT SIZE = 0.038 MG
 EVENT NO. =34207
 BLOCK COUNTER =     1
REG NUMBER = 6

 PEAK VALUE =  7.17 MG
 LTA = 0.011 MG
 EV TIME = 07/13/86 05:53:24.05
 BLK EVENT SIZE = 0.042 MG
 BIG BLK. EVENT SIZE = 0.092 MG
 EVENT NO. = 8894
 BLOCK COUNTER =     4
REG NUMBER = 5

 PEAK VALUE =  5.95 MG
 LTA = 0.010 MG
 EV TIME = 07/08/86 01:27:09.45
 BLK EVENT SIZE = 0.050 MG
 BIG BLK. EVENT SIZE = 0.078 MG
 EVENT NO. =    9
 BLOCK COUNTER =     3
REG NUMBER = 4

 PEAK VALUE =  2.44 MG
 LTA = 0.013 MG
 EV TIME = 07/09/86 14:45:05.01
 BLK EVENT SIZE = 0.038 MG
 BIG BLK. EVENT SIZE = 0.038 MG
 EVENT NO. = 2273
 BLOCK COUNTER =     1
REG NUMBER = 3

 PEAK VALUE =  1.53 MG
 LTA = 0.015 MG
 EV TIME = 07/19/86 05:36:02.65
 BLK EVENT SIZE = 0.038 MG
 BIG BLK. EVENT SIZE = 0.038 MG
 EVENT NO. =16758
 BLOCK COUNTER =     1
REG NUMBER = 2

 PEAK VALUE =  2.14 MG
 LTA = 0.011 MG
 EV TIME = 07/10/86 17:43:11.96
 BLK EVENT SIZE = 0.038 MG
 BIG BLK. EVENT SIZE = 0.038 MG
 EVENT NO. = 4146
 BLOCK COUNTER =     1
REG NUMBER = 1

MBM NUMBER =     2
```

Figure D-2. Command 21 Output

Command 21 (Read Seismic Data) is then used to retrieve the desired data from mass memory. The order in which the data from each event are transferred is unimportant; the data reduction software will arrange the data in the proper order provided that command 20 is received correctly. In response to Command 20 the operator is prompted by CARS to enter the Starting Register Number and the Starting Record Number. The Register Number corresponds to the particular MBM Register that contains the desired data. The data from each register are transmitted from DAGS as 82 records. After receipt of each error free record CARS displays the Register Number, the Record Number and the first data byte of the record. CARS then automatically increments the record number and requests the next record block of data from DAGS. If parity errors are encountered in the data or no data are received within five seconds (as shown in Figure D.2), CARS notifies the operator and requests the same record data block. If after five tries the data have not been received correctly, CARS prints out an error message, increments the record number, and sends the command to DAGS. The operator can then verify that all 82 records for a register has been received correctly. If one or more records are missing, enter Command 21 again, specify the same starting register but this time enter the starting record number of the starting register but this time enter the starting record number of the desired record, continuing this process until all records have been received error free. At the end of the last record (82), CARS automatically increments to the next register and starts requesting data from the first record of that register. If the operator desires data from a different register, interrupt the process by pressing D (Delete) on the keyboard. Restart Command 21 with the desired register and continue until all data have been collected.

Once all the desired data have been collected enter Command 62 (Stop Tape Recording), remove and label the tape, disconnect power from the BRES package, and pack each subsystem in its respective case.

```
REG NO 08  REC NO 52  DATA AC00
REG NO 08  REC NO 51  DATA AC00
BRES REC. PARITY ERRORS = 004
REG NO 08  REC NO 50  DATA AC00
REG NO 08  REC NO 49  DATA AC00
REG NO 08  REC NO 48  DATA AC00
REG NO 08  REC NO 47  DATA AC00
REG NO 08  REC NO 46  DATA AC00
REG NO 08  REC NO 45  DATA AC00
REG NO 08  REC NO 44  DATA AC00
REG NO 08  REC NO 43  DATA AC00
REG NO 08  REC NO 42  DATA AC00
REG NO 08  REC NO 41  DATA AC00
REG NO 08  REC NO 40  DATA AC00
REG NO 08  REC NO 39  DATA AC00
REG NO 08  REC NO 38  DATA AC00
REG NO 08  REC NO 37  DATA AC00
REG NO 08  REC NO 36  DATA AC00
REG NO 08  REC NO 35  DATA AC00
REG NO 08  REC NO 34  DATA AC00
REG NO 08  REC NO 33  DATA AC00
REG NO 08  REC NO 32  DATA AC00
REG NO 08  REC NO 31  DATA AC00
REG NO 08  REC NO 30  DATA AC00
REG NO 08  REC NO 29  DATA AC00
REG NO 08  REC NO 28  DATA AC00
REG NO 08  REC NO 27  DATA AC00
REG NO 08  REC NO 26  DATA AC00
REG NO 08  REC NO 25  DATA AC00
REG NO 08  REC NO 24  DATA AC00
REG NO 08  REC NO 23  DATA AC00
REG NO 08  REC NO 22  DATA AC00
REG NO 08  REC NO 21  DATA AC00
REG NO 08  REC NO 20  DATA AC00
REG NO 08  REC NO 19  DATA AC00
REG NO 08  REC NO 18  DATA AC00
REG NO 08  REC NO 17  DATA AC00
REG NO 08  REC NO 16  DATA AC00
REG NO 08  REC NO 15  DATA AC00
REG NO 08  REC NO 14  DATA AC00
REG NO 08  REC NO 13  DATA AC00
BRES RECEIVED NO DATA
REG NO 08  REC NO 12  DATA AC00
REG NO 08  REC NO 11  DATA AC00
REG NO 08  REC NO 10  DATA AC00
REG NO 08  REC NO 09  DATA AC00
REG NO 08  REC NO 08  DATA AC00
REG NO 08  REC NO 07  DATA AC00
REG NO 08  REC NO 06  DATA AC00
REG NO 08  REC NO 05  DATA AC00
REG NO 08  REC NO 04  DATA AC00
REG NO 08  REC NO 03  DATA AC00
1REG NO 08  REC NO 02  DATA AC00
WAITING FOR MASS MEMORY READ REG NO 08  REC NO 0
ENTER STARTING RECORD NO. (1-82)  1
ENTER STARTING REGISTER NO. (1-56)  8
READ SEISMIC DATA  ? C
ENTER COMMAND 21
```

Figure D-3. Command 21 Output.

DISTRIBUTION:

Mr. J. Alan Ballard
Naval Ocean Research and Development Activity
NSTL, MS 39529-5004

Dr. Raul Husid
SHELL Development Company
P.O. Box 481
Houston, TX 77001

Mr. Charles Smith
Minerals Management Service
Technology Assessment and Research Branch
647 National Center
Reston, VA 22091

Mr. Harold Shoemaker
U.S. Department of Energy
Morgantown Energy Technology Center
P.O. Box 880, Collins Ferry Road
Morgantown, WV 26505

Mr. Marvin Singer
U.S. Department of Energy
FE-14 GTN
Washington, D.C. 20545

Mr. Paul Scott
U.S. Department of Energy
GTN
Washington, D.C. 20545

Mr. A. Hartstein
U.S. Department of Energy
FE-32 D-132 GTN
Washington, DC 20545

Mr. Ed Ferrerro
U.S. Department of Energy
FE-32 D132 GTN
Washington, DC 20545

Dr. William M. Sackinger
Geophysical Institute
University of Alaska
Fairbanks, AK 99701

Dr. Andre Rossfelder
Geomarex Corporation
P.O. Box 2244
La Jolla, CA 92038

Keith Westhusing
Bartlesville Project Office
P.O. Box 1398
Bartlesville, OK 74003

0311	J. P. Classen (3)
1533	F. Norwood
5144	D. E. Ryerson
6200	V. L. Dugan
6250	B. W. Marshall
6201	D. Engi (15)
6258	P. J. Hommert (5)
6258	G. J. Sleefe (5)
6258	B. J. Thorne
6334	D. R. Anderson
6334	J. P. Hickerson
7525	A. A. Lopez
3141	S. A. Landenberger (5)
3154-3	C. H. Dalin (28) for DOE/OSTI
8024	P. W. Dean