STATE	PROJECT	SHEET NUMBER

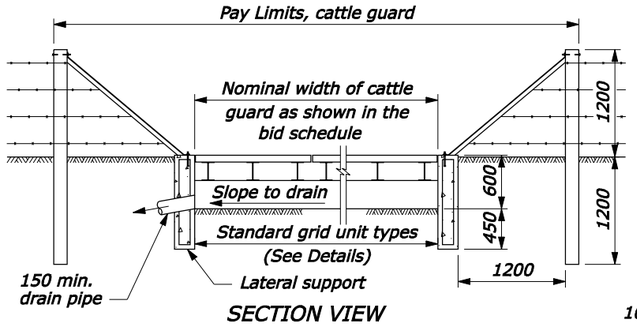

SECTION VIEW

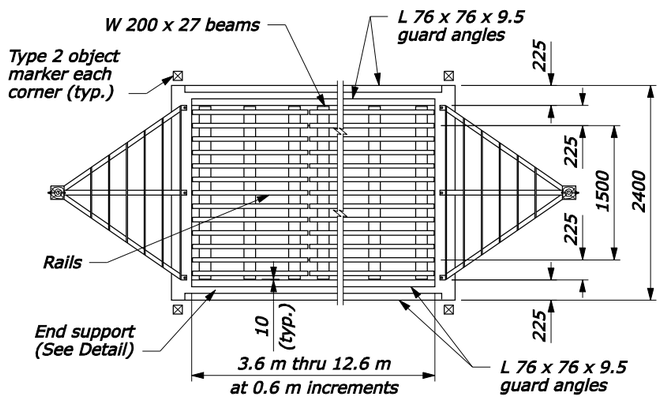

PLAN

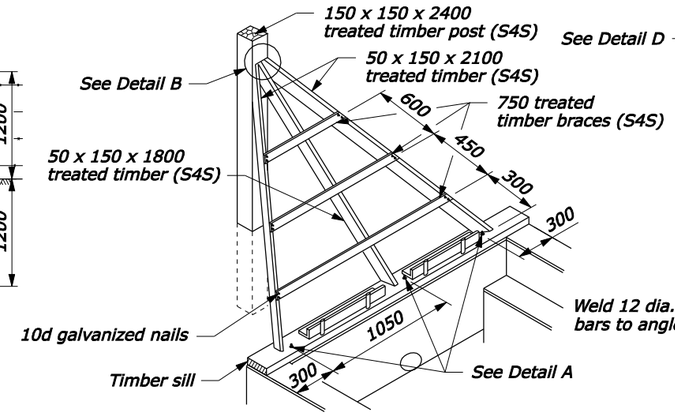

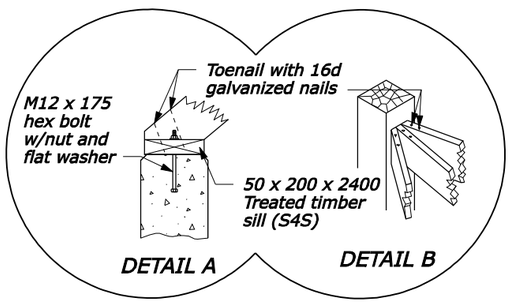

WOOD WING GUARD

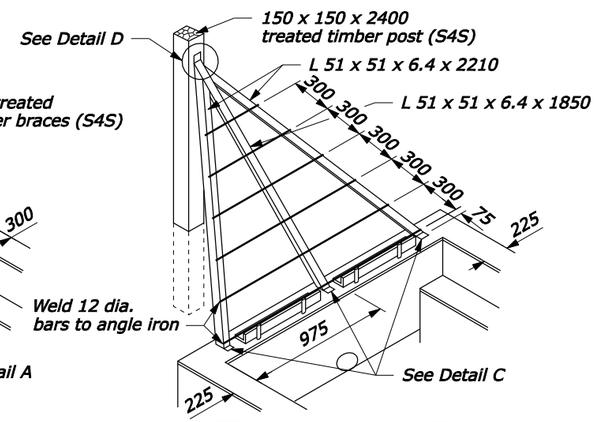

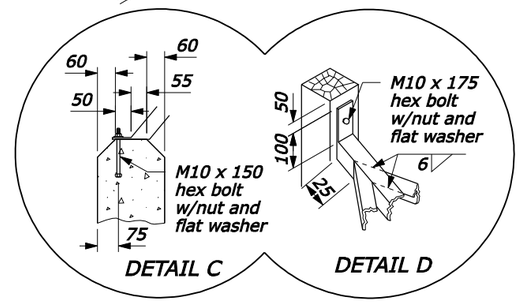

ANGLE IRON WING GUARD

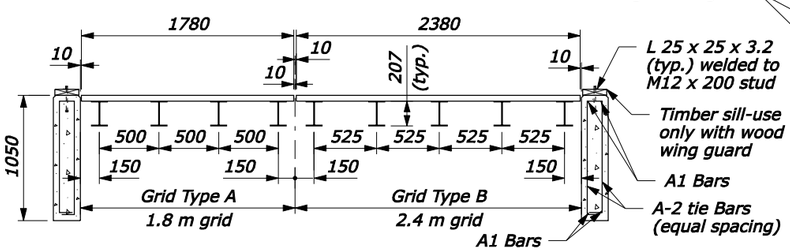

STANDARD GRID UNIT TYPES

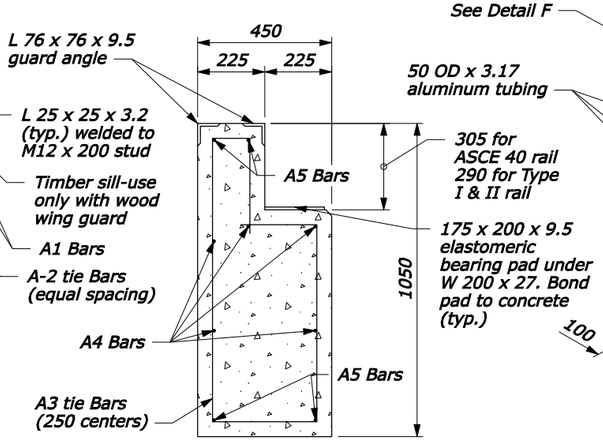

END SUPPORT DETAIL
(#13 Reinforcing Bars)

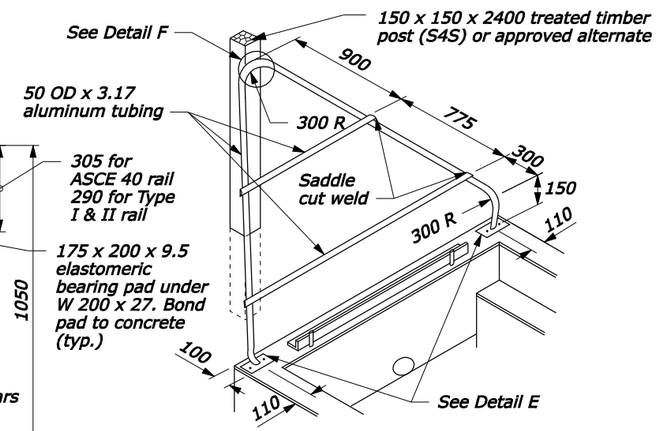

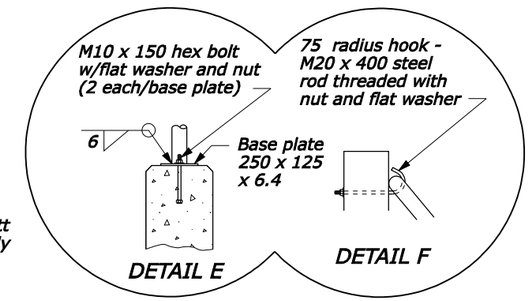

ALUMINUM TUBING WING GUARD

NO SCALE

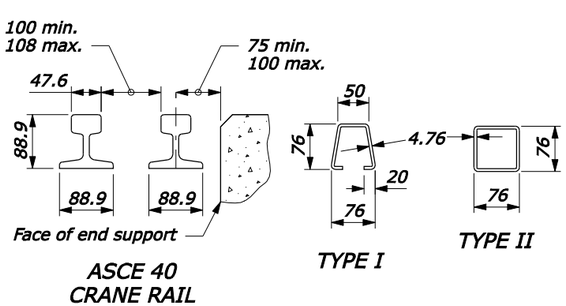

ACCEPTABLE ALTERNATE RAIL

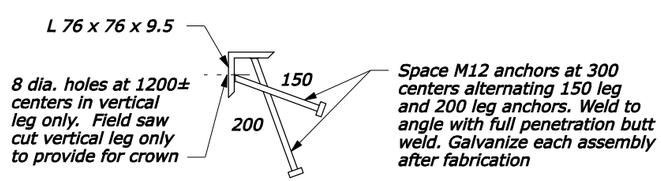

GUARD ANGLE DETAIL
(4 required per cattle guard)

NOTE:

1. LOADING: AASHTO MS18.
2. CONCRETE: Chamfer exposed edges 20 mm unless otherwise shown. Give all concrete surfaces a Class 1 finish.
3. STRUCTURAL STEEL: Rails conform to the requirements for ASCE 40 crane rail. Structural steel for alternate sections conforms to ASTM A 500, Grade B, Copper Steel or ASTM A 618, Grade 2. If the steel does not contain a minimum of 0.2 percent copper, galvanize the alternate sections. All other structural steel conforms to AASHTO ASTM A36 and is painted.
4. The minimum concrete cover to the face of any bar is 50 mm unless otherwise shown. All bars are #13.
5. All welds are continuous 6 mm fillet shop welds. Weld rail or alternate sections on both sides to the W 200 x 27 beams at each intersection. Conform all welding to Section 555.
6. Use aluminum alloy 6061-T6 or 6063-T6 for aluminum tubing.
7. All timber conforms to AASHTO M 168. Treat timber with chromated copper arsenate according to AASHTO M 133.
8. Galvanize all hardware according to AASHTO M 111.
9. Construct the cattle guard to conform with the finished roadway grade and template.
10. Place one object marker at each corner of the cattle guard as shown. Mount object markers on 100 x 100 x 1950 mm posts with the reflector located 1050 mm above the elevation of the lateral support concrete.
11. Install drain pipe as shown where required. Drain pipe is included in cattle guard unless otherwise shown.
12. Unless otherwise shown in the special contract requirements, shop apply paint system 2 according to Section 555 and color the top coat according to Federal Standard 595B, Gray, 36231. Repair any damage to the paint system during installation.
13. Install channels and wood blocking on cattle guards than 4.8 m to maintain grate spacing as shown on Standard M619-2.
14. See Standard M619-3 for optional precast foundation details.
15. Dimensions without units are millimeters.

U.S. DEPARTMENT OF TRANSPORTATION
FEDERAL HIGHWAY ADMINISTRATION
FEDERAL LANDS HIGHWAY

METRIC STANDARD

CATTLE GUARD

STANDARD APPROVED FOR USE 3/1996

REVISED: 6/1997 6/2005
DRAFT: 5/2008

STANDARD
M619-1

ftp://198.145.188.2/std_plan/sts1901.dgn [Metric] 01-May-2008 03:33 PM