SECTION 4

PERFORMANCE

INTRODUCTION.

This section contains information on crew display instrument markings, instrument accuracy consumable requirements, thrusting data (as available), and S/C operational constraints and limitations.

4.1 CREW DISPLAY INSTRUMENT MARKINGS AND ACCURACY DATA.

Paragraphs 4.1.1 through 4.1.7.4 include information on instrument markings and instrument accuracy. Adjoining tabular lists provide accuracy data for each indicator scale and list the measurement number of the signal which is monitored on each indicator scale. Some indicators can, by selection, monitor more than one signal; in which case, the measurement number of all signals monitored by the indicator are listed. Selector switch and indicator functions are covered in detail in section 2.

Some of the system indicators shown in the associated illustrations (figures 4-1 through 4-12) are provided with vertical or horizontal green-colored bands to show normal operating ranges, vertical yellow bands to show permissible operating ranges requiring caution, and horizontal red bands or lines to show system limitations. The color markings, operating ranges, and limitations for these system indicators are as follows:

System	Indicator Scale	Color Marking	Operating Range or Limitation
SPS (MDC-20) (figure 4-1)	PROP TEMP	Red	80°F (upper limit) and -40°F (lower limit)
	PRESSURE-FUEL	Green	170 to 195 psia (normal band)
	PRESS-OX	Green	Same as PRESSURE-FUEL scale.

PERFORMANCE

System	Indicator Scale	Color Marking	Operating Range or Limitation
SPS (MDC-3) (figure 4-11)	PRESSURE-ENG INLET-FUEL	Green	STATIC 170 to 195 psia (normal band) FIRE 135 to 165 psia (normal band)
	PRESSURE-ENG INLET-OX	Green	Same as PRESSURE-ENG INLET-FUEL scale.
	L/V AOA/SPS P_c indicator	Green	SPS FIRE 65 to 125% (normal band)
EPS (MDC-13) (figure 4-3)	TANK PRESSURE-H_2-1	Green	230 to 265 psia (normal band)
	TANK PRESSURE-H_2-2	Green	Same as TANK PRESSURE-H_2-1 scale.
	TANK PRESSURE-O_2-1	Green	865 to 935 psia (normal band)
	TANK PRESSURE-O_2-2	Green	Same as TANK PRESSURE-O_2-1 scale
(MDC-18) (figure 4-5)	FUEL CELL-FLOW-H_2	Green	0.03 to 0.15 lb/hr (normal band)
	FUEL CELL-FLOW-O_2	Green	0.25 to 1.20 lb/hr (normal band)
	FUEL CELL-MODULE TEMP-SKIN	Green	385° to 495°F (normal band)
	FUEL CELL-MODULE TEMP-COND EXH	Green	157.5° to 172.5°F (normal band)
ECS (MDC-13) (figure 4-9)	PRESS GLY DISCH	Green	35 to 55 psia (normal band)
	TEMP-SUIT	Green	45° to 65°F (normal band)
	PRESS-SUIT	Red	3.4 psia (low limit line)

PERFORMANCE

System	Indicator Scale	Color Marking	Operating Range or Limitation
	PRESS-CABIN	Red	4.7 psia (low limit line)
	PART PRESS-CO_2	Red Yellow	15 mm Hg (high limit line) 7.6 to 15 mm Hg (caution band)
PGA (figure 4-9)	PGA pressure indicator	Red Green	2.0 to 3.5 psia (emergency band) 3.5 to 10 psia (normal band)

4.1.1 SERVICE PROPULSION SYSTEM INDICATORS.

Instrument markings for the SPS indicators (MDC-20) are shown in figure 4-1. The indicators present a visual display of SPS temperatures and pressures. Visual displays of SPS fuel and oxidizer remaining aboard the S/C are shown in the adjacent OXID-FUEL QUANTITY display windows (as selected by the SPS quantity SENSOR switch). (Refer to section 3.)

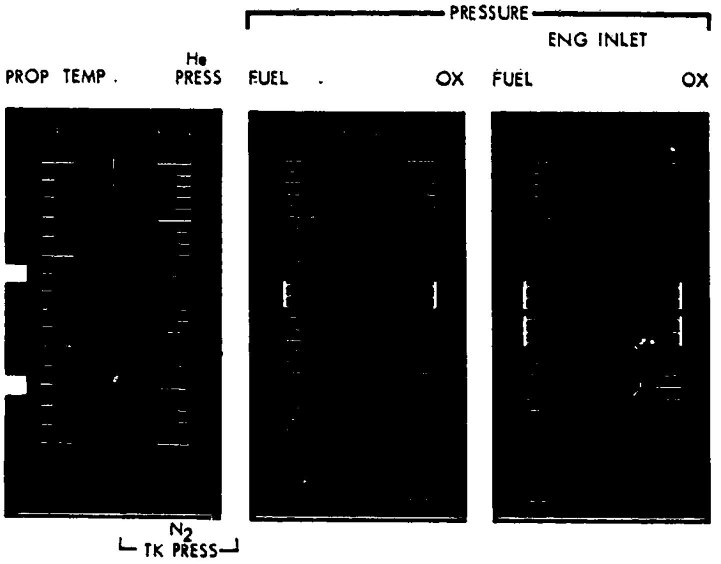

NOTE: Red lines on the propellant temperature scale show upper limit of 80°F and lower limit of -40°F. Vertical green color bands show normal operating ranges for fuel and oxidizer pressure (170 to 195 psia) and engine inlet pressures for STATIC (170 to 195 psia) and FIRE (135 to 165 psia).

SM-2A-689H

Figure 4-1. Service Propulsion System Indicators

The accuracy for each indicator scale and the measurement number of the associated signal is as follows:

Indicator Scale	Measurement Number	Indicator Accuracy
PROP TEMP	SP 0002 T	±5°F at 75°F ±10°F at 0° and 150°F
He PRESS	SP 0001 P	±100 psia at 75°F ±150 psia at 0° and 150°F
Tk PRESS-N_2	SP 0600 P (Primary) SP 0601 P (Secondary)	±100 psia at 75°F ±150 psia at 0° and 150°F
PRESSURE-FUEL	SP 0006 P	±5 psia at 75°F ±10 psia at 0° and 150°F
PRESSURE-OX	SP 0003 P	±5 psia at 75°F ±10 psia at 0° and 150°F
PRESSURE-ENG INLET-FUEL	SP 0010 P	±5 psia at 75°F ±10 psia at 0° and 150°F
PRESSURE-ENG INLET-OX	SP 0009 P	±5 psia at 75°F ±10 psia at 0° and 150°F

4.1.2 REACTION CONTROL SYSTEM INDICATORS.

Instrument markings for the S/M and C/M RCS indicators (MDC-12) are shown in figure 4-2. The indicators present a visual display of system temperatures and pressures. Visual displays of S/M RCS fuel and oxidizer remaining are shown on the adjacent PROPELLANT QUANTITY indicator (as selected by the RCS INDICATORS switch). (Refer to section 3.)

The accuracy for each indicator scale and the measurement number of the associated signal is as follows:

Indicator Scale	Measurement Number	Indicator Accuracy
S/M RCS-TEMP PKG	SR 5065 T (Quad A) SR 5066 T (Quad B) SR 5067 T (Quad C) SR 5068 T (Quad D)	±5°F at 75°F ±10°F at 0° and 150°F

PERFORMANCE

Indicator Scale	Measurement Number	Indicator Accuracy
S/M RCA-PRESS-H_e	SR 5001 P (Quad A) SR 5002 P (Quad B) SR 5003 P (Quad C) SR 5004 P (Quad D)	±100 psia at 75°F ±150 psia at 0° and 150°F
S/M RCS-PRESS-MANF	SR 5729 P (Quad A) SR 5776 P (Quad B) SR 5817 P (Quad C) SR 5830 P (Quad D)	At 75°F, ±5 psia from 140 to 340 psia and ±10 psia over balance of scale. At 0° and 150°F, ±10 psia from 145 to 340 psia and ±15 psia over balance of scale.
S/M RCS-TEMP H_e	SR 5013 T (Quad A) SR 5014 T (Quad B) SR 5015 T (Quad C) ST 5016 T (Quad D)	Same as S/M RCS-PRESS-MANF indicator
C/M RCS-H_e TEMP	CR 0003 T (System A) CR 0004 T (System B)	±5°F at 75°F ±10°F at 0° and 150°F
C/M RCS-PRESS-H_e	CR 0001 P (System A) CR 0002 P (System B)	±100 psia at 75°F ±150 psia at 0° and 150°F
C/M RCS-PRESS-F	CR 0005 P (System A) CR 0006 P (System B)	Same as S/M RCS-PRESS-MANF indicator.
C/M RCS-PRESS-OX	CR 0011 P (System A) CR 0012 P (System B)	Same as S/M RCS-PRESS-MANF indicator.

4.1.3 ELECTRICAL POWER SYSTEM INDICATORS.

4.1.3.1 EPS (Cryogenic Storage) Tank Pressure Indicators.

Instrument markings for the EPS (cryogenic storage) tank pressure indicators (MDC-13) are shown in figure 4-3. The accuracy for each indicator scale and the measurement number of the associated signal is as follows:

NOTE TANK PRESSURE-O_2-1 scale is used to display cryogenic storage tank 1 pressure or ECS surge tank pressure as selected by O_2 PRESS IND toggle switch located immediately below the display.

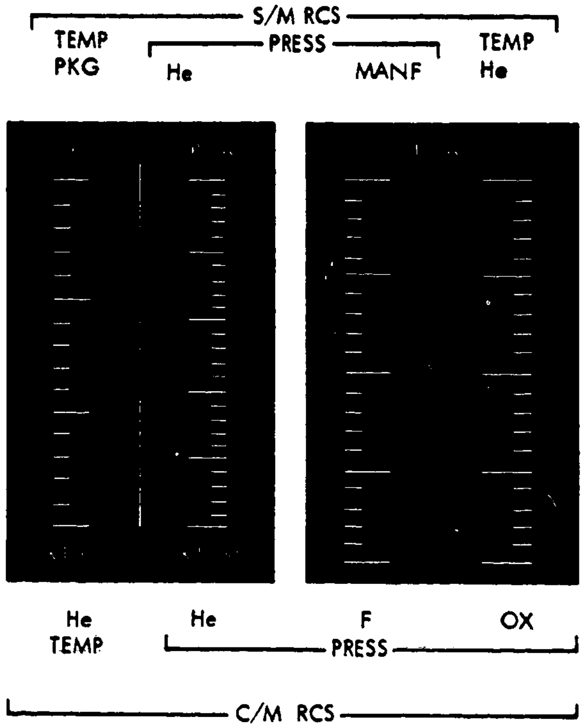

SM-2A-688C

Figure 4-2. S/M and C/M Reaction Control System Indicators

Indicator Scale	Measurement Number	Indicator Accuracy
TANK PRESSURE-H_2-1	SF 0039 P	±5 psia at 75°F ±10 psia at 0° and 150°F
TANK PRESSURE-H_2-1	SF 0040 P	Same as TANK PRESSURE-H_2-1 indicator.
TANK PRESSURE-O_2-1	SF 0037 P (Storage tank) CF 0006 P (Surge tank)	At 75°F, ±5 psia at 850 to 950 psia and ±3% of remaining scale. At 0° and 150°F, ±10 psia at 850 to 950 psia and 4% of remaining scale.
TANK PRESSURE-O_2-2	SF 0038 P	Same as TANK PRESSURE-O_2-2 indicator.

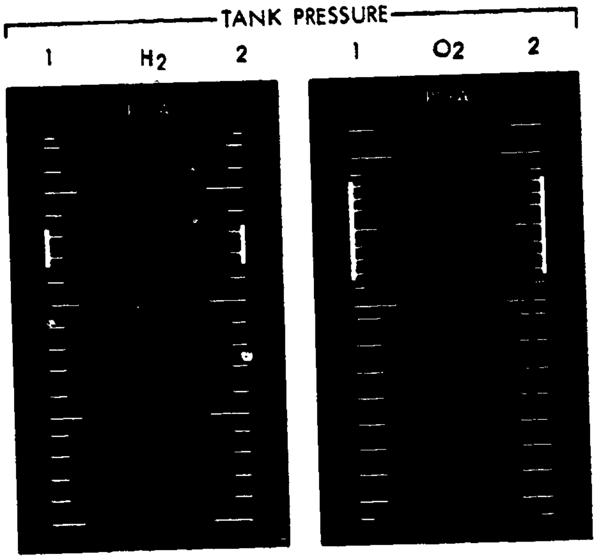

NOTE: Vertical green color bands on the indicators show normal operating ranges for hydrogen tank pressures (230 to 265 psia) and oxygen tank pressures (865 to 935 psia).

SM-2A-690D

Figure 4-3. EPS (Cryogenic Storage) Tank Pressure Indicators

4.1.3.2 EPS (Cryogenic Storage) Tank Quantity Indicators.

Instrument markings for the EPS (cryogenic storage) tank quantity indicator (MDC-13) are shown in figure 4-4. The accuracy for each indicator scale and the measurement number of the associated signal is as follows:

Indicator Scale	Measurement Number	Indicator Accuracy
TANK QUANTITY-H_2-1	SF 0030 Q	±0.5 lb at 75°F ±1.0 lb at 0° and 150°F
TANK QUANTITY-H_2-2	SF 0031 Q	Same as TANK QUANTITY-H_2-1 indicator.
TANK QUANTITY-O_2-1	SF 0032 Q	±5.0 lb at 75°F ±10.0 lb at 0° and 150°F
TANK QUANTITY-O_2-2	SF 0033 Q	Same as TANK QUANTITY-O_2-1 indicator.

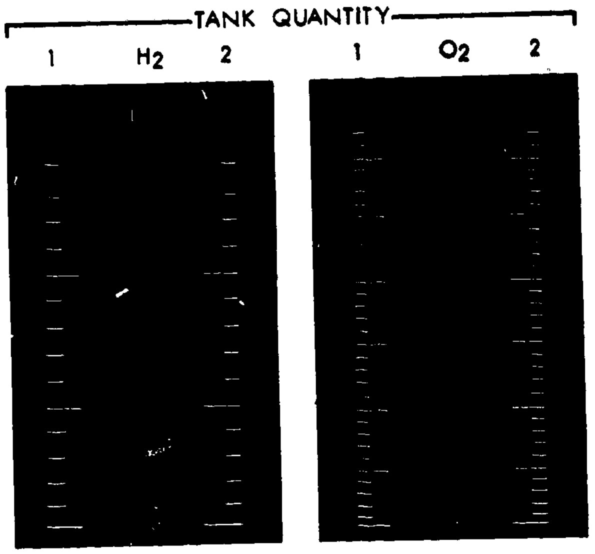

Figure 4-4. EPS (Cryogenic Storage) Tank Quantity Indicators

4.1.3.3 EPS Fuel Cell Power Plant Indicators.

Instrument markings for the EPS fuel cell power plant indicators (MDC-18) are shown in figure 4-5. The accuracy for each indicator scale and the measurement number of the associated signal is as follows:

Indicator Scale	Measurement Number	Indicator Accuracy
FUEL CELL-FLOW-H_2	SC 2139 R (F/C 1) SC 2140 R (F/C 2) SC 2141 R (F/C 3)	±0.005 lb/hr at 75°F ±0.0075 lb/hr at 0° and 150°F
FUEL CELL-FLOW-O_2	SC 2141 R (F/C 1) SC 2143 R (F/C 2) SC 2144 R (F/C 3)	±0.05 hr/hr at 75°F, and at 0° and 150°F.
FUEL CELL-MODULE TEMP-SKIN	SC 2084 T (F/C 1) SC 2085 T (F/C 2) SC 2086 T (F/C 3)	At 75°F, ±7°F for 400° to 550° scale and 3% of remaining scale. At 0° and 150°F, ±14°F for 400° to 500° scale and 3% of remaining scale.
FUEL CELL-MODULE TEMP-CONT EXH	SC 2081 T (F/C 1) SC 2082 T (F/C 2) SC 2083 T (F/C 3)	±3° at 75°F ±5°F at 0° and 150°F

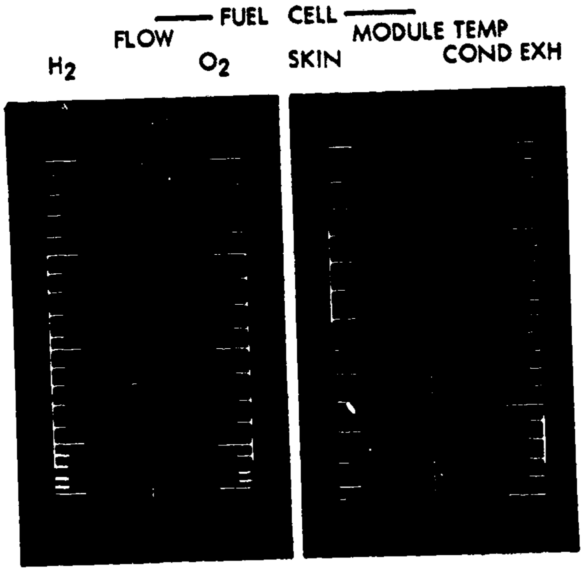

NOTE: Vertical green color bands on the indicators show normal operating ranges for hydrogen flow (0.03 to 0.15 lb/hr), oxygen flow (0.25 to 1.20 lb/hr), module skin temperature (385° to 495°F), and the condenser exhaust temperature (157.5° to 172.5°F).

SM-2A-692D

Figure 4-5. EPS Fuel Cell Indicators

4.1.3.4 EPS Volts, Amperes, and Frequency Meters.

Instrument markings for the EPS-volts, amperes, and frequency meters (MDC-18) are shown in figure 4-6. The accuracy for each indicator scale and the measurement number of the associated signal is as follows:

Indicator Scale	Measurement Number	Indicator Accuracy
DC VOLTS	CC 0206 V (Main Bus A) CC 0207 V (Main Bus B) CC 0210 V (Bat Bus A) CC 0211 V (Bat Bus B) CC 0212 V (Post Ldg Bat) CC 0214 V (Bat Charger Output) CC 0227 V (Pyro Bat A) CC 0228 V (Pyro Bat B)	At 75°F, ±0.25 volts for 25 to 37 volts scale and ±1.0 volt for balance of scale. At 0° and 150°F, ±0.5 volts for 25 to 37 volts scale and ±1.0 volt for balance of scale.
DC AMPS	CC 0222 C (Bat Bus A) CC 0223 C (Bat Bus B) CC 0224 C (Post Ldg Bat) SC 2113 C (F/C 1 Output) SC 2114 C (F/C 2 Output) SC 2115 C (F/C 3 Output)	±1.0% of full scale at 75°F ±2.0% of full scale at 0° to 150°F

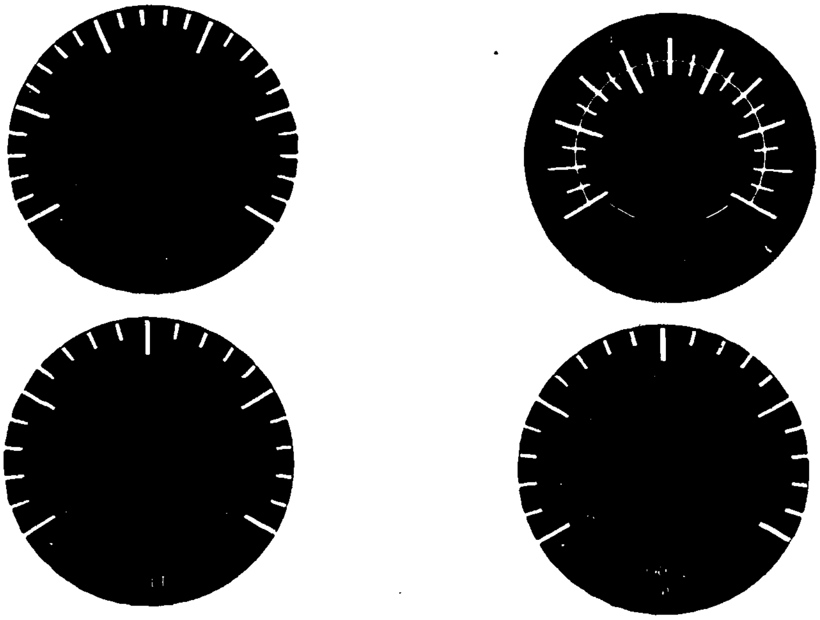

SM-2A-694C

Figure 4-6. EPS Volts, Amperes, and Frequency Meters

Indicator Scale	Measurement Number	Indicator Accuracy
CHGR (Inner Scale)	CC 0215 C (Bat Charger Output)	Same as DC AMPS scale
AC VOLTS	CC 0200 V (Bus 1 ØA) CC 0201 V (Bus 1 ØB) CC 0202 V (Bus 1 ØC) CC 0203 V (Bus 2 ØA) CC 0204 V (Bus 2 ØB) CC 0205 V (Bus 2 ØC)	Between 0° and 150°F, ±1.0 volt for the 105 and 125 volts scale and ±2.0 volts for balance of scale. At 0° and 150°F, ±2.0 volts for the 105 and 125 volts scale.
FREQ CPS	CC 0213 F (Bus 1 ØA) CC 0181 F (Bus 1 ØB) CC 0182 F (Bus 1 ØC) CC 0217 F (Bus 2 ØA) CC 0183 F (Bus 2 ØB) CC 0184 F (Bus 2 ØC)	From 50° to 110°F, ±1 cycle at 400 cycles. From 0° to 150°F, ±2 cycles at 400 cycles and ±2.5 cycles for balance of scale.

CREW DISPLAY INSTRUMENT MARKINGS AND ACCURACY DATA

4.1.4 ENVIRONMENTAL CONTROL SYSTEM INDICATORS.

4.1.4.1 ECS Pressure and Slow-Rate Indicators.

Instrument markings for the ECS pressure and rate-of-flow indicator (MDC-13) are shown in figure 4-7. The accuracy for each indicator scale and the measurement number of the associated signal is as follows:

Indicator Scale	Measurement Number	Indicator Accuracy
GLY EVAP STEAM PRESS	CF 0034 P	±5% of full scale between 0° and 150°F
PRESS GLY DISCH	CF 0016 P	Same as above.
FLOW O_2	CF 0035 R	Same as above.
ΔP SUIT COMPR	CF 0115 P	Same as above.

4.1.4.2 ECS Quantity and Outlet Temperature Indicators.

Instrument markings for the ECS quantity and outlet temperature indicators (MDC 13 and 14) are shown in figure 4-8. The accuracy for each indicator scale and the measurement number of the associated signal is as follows:

Indicator Scale	Measurement Number	Indicator Accuracy
GLY ACCUM-QUANTITY	CF 0019 Q	±5% full-scale 0° to 150°F
WATER QUANTITY	CF 0010 Q (Potable Water) CF 0009 Q (Waste Water)	Same as above.
ECS RAD-OUTLET TEMP	CF 0020 T	Same as above.
GLY EVAP-OUTLET TEMP	CF 0018 T	Same as above.
ECS RAD OUT TEMP-1	SF 0671 T	Same as above.
ECS RAD OUT TEMP-2	SF 0672 T	Same as above.

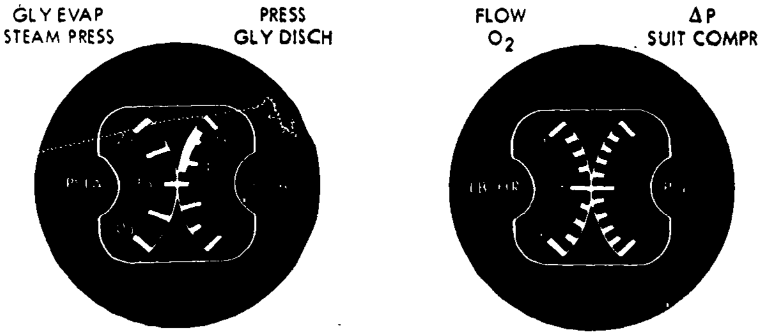

NOTE: The green color band on the glycol discharge scale indicates a normal operating range of 35 to 55 psia.

SM-2A-695E

Figure 4-7. ECS Pressure and Flow Indicators

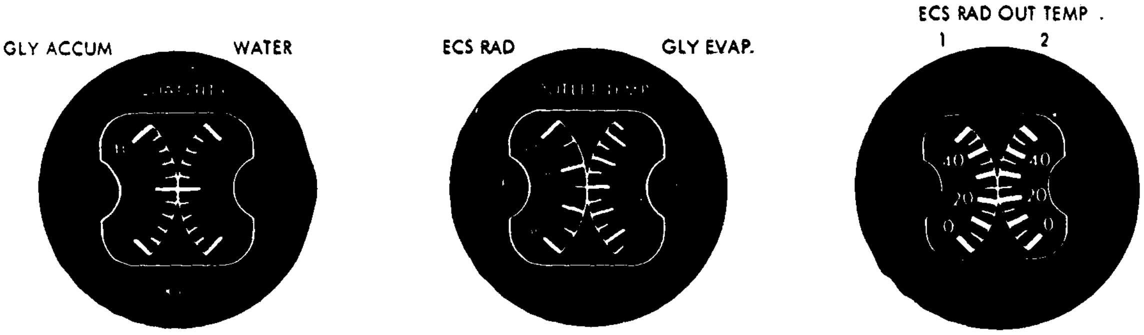

SM-2A-696C

Figure 4-8. ECS Quantity and Outlet Temperature Indicators

4.1.4.3 ECS Suit and Cabin Temperature/Pressure Indicators.

Instrument markings for the ECS suit and cabin temperature/pressure indicators are shown in figure 4-9. The accuracy for each indicator scale and the measurement number of the associated signal is as follows:

Indicator Scale	Measurement Number	Indicator Accuracy
TEMP-SUIT	CF 0008 T	±2.5°F overall at 0° to 150°F.
TEMP-CABIN	CF 0002 T	Same as above.
PRESS-SUIT	CF 0012 P	At 75°F, ±0.25 psia between 0 and 6 psia and ±3% for remainder of scale. At 0° and 150°F, ±0.375 psia between 0 and 6 psia, and ±4% for remainder of scale.
PRESS-CABIN	CF 0001 P	Same as PRESS-SUIT scale.
PART PRESS-CO_2	CF 0005 P	At 75°F, ±0.5 mm between 0 and 15 mm Hg, and ±1.0 mm for remainder of scale. At 0° and 150°F, ±1.0 mm between 0 and 15 mm Hg, and 1.5 mm for remainder of scale.
PGA Pressure Indicator	None	±2 psia overall at normal temperature range.

4.1.5 TELECOMMUNICATION SYSTEM METERS.

Instrument markings for the telecommunication system meters are shown in figure 4-10.

4.1.5.1 Auxiliary DC VOLTS Meter.

The auxiliary DC VOLTS meter, located on RHFEB-200 (figure 4-10), is used to monitor selected measurements for which there is either no other crew display or the crew display is an event indicator capable of displaying only in-tolerance and out-of-tolerance conditions. The voltmeter is used in conjunction with the adjacent FUNCTION SELECT and TEST SELECT

PERFORMANCE

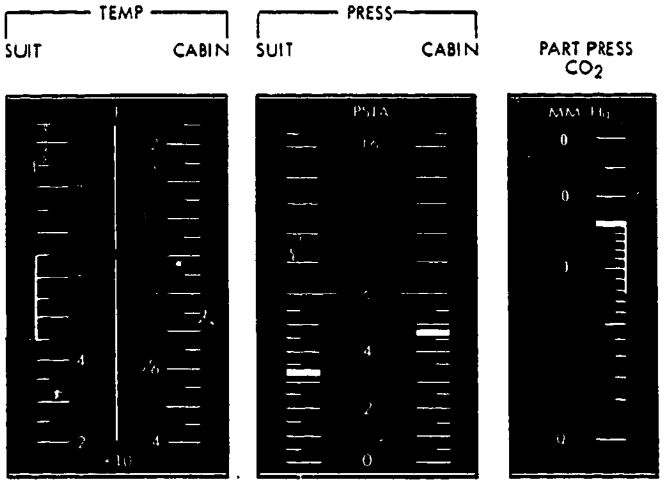

NOTES: 1 A vertical green color band shows the normal operating range for the suit temperature (45° to 65°F). Red horizontal lines show limits for suit pressure (3.4 psia), cabin pressure (4.7 psia), and CO_2 pressure (15 mm Hg). A vertical yellow color band shows the caution range for CO_2 pressure (7.6 to 15 mm Hg).

PGA PRESSURE INDICATOR (LEFT FOREARM)

2. The PGA pressure indicator presents an operating range from 2 to 10 psia and a green and red color band. The green band (3.5 to 10 psia) shows normal pressure required during space flight. The red band (3.5 to 2 psia) shows the emergency limitations for crew safety. During ground operations, the indicator needle will be pegged beyond 10 psia because of atmospheric pressure.

SM-2A-697C

Figure [illegible]. ECS Suit and Cabin Temperature/Pressure Indicators

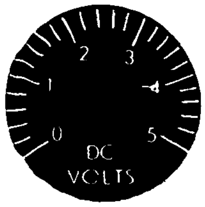

Auxiliary DC VOLTS Meter

S-BAND ANT

S-BAND ANT Meter

SM-2A-693C

Figure [illegible]. Telecommunication System Meters switches to monitor 13 EPS, 6 RCS, 4 G&N and 1 ECS analog measurements. Refer to Controls and Displays (section 3) for information on which measurements are selected for monitoring by the auxiliary DC VOLTS meter.

The voltmeter provides a reading between 0 and 5 volts of the selected measurement. By use of a voltmeter conversion chart an interpolation of the value for the selected measurement can be made. (Refer to section 2.)

NOTE The accuracy of the auxiliary DC VOLTS meter (for the full scale) is ±1 percent at 75°F and ±2 percent at 0° and 150°F.

4.1.5.2 S-Band ANT Meter.

The S-Band ANT meter, on MDC-19 (figure 4-10), utilizes the automatic gain control (AGC) signal in the S-Band receiver to display, in a clockwise direction, the relative magnitude of signals received by the unified S-band equipment (USBE). The meter is used in determining the correct S-band antenna and S/C attitude for optimum S-band performance.

NOTE The accuracy of the S-BAND ANT meter (for the full scale) is ±5 percent at temperatures between 0° and 150° F.

4.1.6 SEQUENTIAL SYSTEMS INDICATORS.

Instrument markings for the sequential systems indicators are shown in figure 4-11. The indicators present visual displays required during launch, in-flight SPS operation, and the earth landing sequence of events. (Refer to paragraphs 4.1.6.1 and 4.1.6.2.)

4.1.6.1 Barometric Pressure Indicator (Altimeter).

The barometric pressure indicator, an altimeter on MDC-1 (figure 4-11), is used in conjunction with the earth landing system (ELS) and indicates the pressure altitude of the S/C under low-altitude, low-Mach conditions. This altimeter is monitored during the earth landing phase of the mission to verify that the ELS sequencer is initiating various phases of landing system deployment at the proper pressure altitude points. A knob, located left of the altimeter dial face, is used in setting the adjacent marker (to display the corrected main parachute deploy altitude for low-altitude aborts). The adjustable marker, based

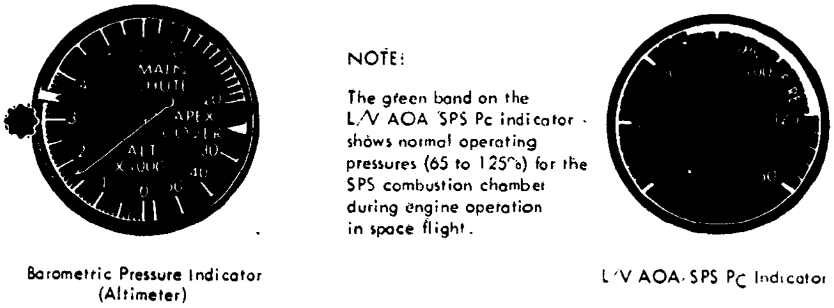

NOTE: The green band on the L/V AOA SPS Pc indicator shows normal operating pressures (65 to 125%) for the SPS combustion chamber during engine operation in space flight.

SM-2A-700F

Figure 4-11. Sequential System Indicators

on barometric pressure, is set prior to launch. (Refer to paragraph 4.4.2.1 for altimeter error and C/B base pressure effects.)

> NOTE The accuracy of the altimeter is ±100 feet from 0 to 4000 feet and 5 percent of the altimeter reading from 4000 to 60,000 feet.

[illegible] L/V AOA/SPS P_c Indicator.

The L/V AOA/SPS P_c indicator, on MDC-3 (figure 4-11), is used to display the launch vehicle angle of attack (in percentage of pressure from the Q-ball) during launch. After launch vehicle separation from the S/C, the gauge is used to display SPS combustion chamber pressure during engine operation. Inputs to this time-shared gauge are determined by the position of the L/V AOA/SPS P_c switch, located on the same panel.

> NOTE The accuracy of the L/V AOA/P_c indicator (for the full scale) is 1 percent at 75°F and 2 percent at 0° and 150°F.

[illegible] MISCELLANEOUS INDICATORS.

Instrument markings for mechanically operated indicators such as clocks, timers, and an accelerometer are shown in figure 4-12 and described in paragraphs 4.1.7.1 through [illegible].

> NOTE The accuracy of the S/C clocks and timers at temperatures between 60° and 90°F (and zero gravity) will not exceed ±5 seconds for 10 consecutive days (the arithmetic average of the daily rates). For environmental conditions above or below this temperature range, the average of daily rates for 5 consecutive days will not exceed 30 seconds.

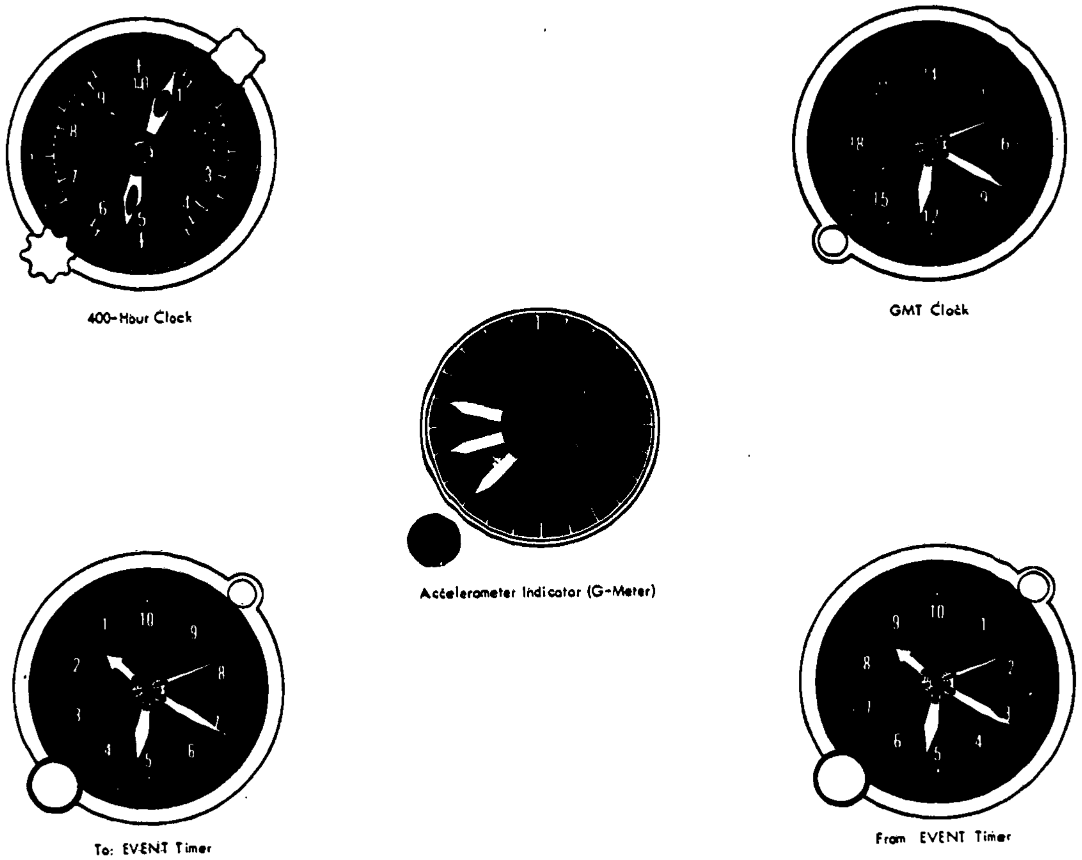

400-Hour Clock

GMT Clock

Accelerometer Indicator (G-Meter)

To: EVENT Timer

From EVENT Timer

SM-2A-731D

Figure 4-12. Miscellaneous Indicators

4.1.7.1 Mission-Elapsed Time (400-Hour) Clock.

The 400-hour clock, on MDC-12 (figure 4-12), has a 10-hour dial face with second, minute, and hour hands. A display window is also provided to show mission elapsed time in 10-hour increments up to 400 hours (when window display returns to 0.000). The hour and minute hands are set by a knob at the bottom left of the dial face. A knob at the top right of the dial is used to reset, start, and stop the clock. This clock is illuminated when the floodlights switch on MDC-27 is actuated.

4.1.7.2 GMT (Greenwich Mean Time) Clock.

The GMT clock, LHFEB-306 (figure 4-12), has a 24-hour dial face with standard second, minute, and hour hands. A time-set screw, at the bottom left of the dial face, is used to synchronize the clock with Greenwich mean time. This clock illuminates when the CLOCKS-BRT-OFF-DIM switch (LEB-98) is actuated.

TO EVENT and FROM EVENT Timers.

The TO EVENT and FROM EVENT timers, on LHFEB-306 (figure 4-12), have 10-hour dial faces with second, minute, hour, and 10-hour hands. A knob at the bottom left of each timer is used to set the timer hands. Each timer can be reset, started, or stopped by a pushbutton control at the top right of the timer. These timers illuminate when the CLOCKS-BRT-OFF-DIM switch (LEB-100) is actuated.

Accelerometer Indicator (G-Meter).

The accelerometer indicator or g meter, on MDC-2 (figure 4-[illegible]), is provided with an indicating pointer for showing S/C positive and negative g loads. In addition to the indicating pointer, there are two recording pointers (one for positive and one for negative g loads) which follow the indicating pointer to its maximum attained travel. The recording pointers will remain at the maximum positive and negative positions attained to provide a record of maximum g loads encountered. To return the recording pointers to the normal 1-g position, it is necessary to press the RESET knob on the lower left-side of the accelerometer.

NOTE The accuracy of the g meter is ±0.2 g from 0 to 4 g's, ±0.3 g at 6 g's, ±0.4 g from 8 to 10 g's, and ±0.75 g at 15 g's.

CONSUMABLE REQUIREMENTS.

Information relating to S/C 014 consumable materials for the RCS, SPS, EPS, and ECS is provided in this section. For detailed consumable data, refer Mission Modular Data Book (MMDB).

S/M RCS PROPELLANT CONSUMPTION DATA.

Propellant consumables utilized by the 16 S/M RCS engines provide thrust for three-axes rotational and translational control of the spacecraft (after S/C separation from the launch vehicle and until CM-SM separation prior to entry). The oxidizer/fuel ratio (by weight) for each engine is 2.02±0.07:1 at a propellant flow rate of [illegible] lb/sec. Nominal values for the individual S/M RCS consumables (maximum usable tank capacity of 790 pounds) are as follows:

Consumables	Storage Tank	Weight per Tank		Delivery Rate to Engine (lb/sec)
		Filled (lb)	Maximum Usable (lb)	
Nitrogen tetroxide (N_2O_4) (oxidizer)	4	138.1	131.7	0.241
50% unsymmetrical diamethylhydrazine and 50% hydrazine (UDMH/ N_2H_4) (fuel)	4	69.7	65.8	0.119
Helium (He) (pressurant)	4	0.52	0.52	N/A

4.2.1.1 Manual Attitude Control Maneuvers

S/M RCS propellant consumption rates for manual attitude control maneuvers (proportional and direct control) are presented in figure 4-13. Assumptions applicable to the curves shown in figure 4-13 are as follows:

- The dynamic disturbances accounted for are SPS propellant slosh, the earth orbit aerodynamics and gravity gradient, ECS steam venting, and rotating EPS and ECS equipment.
- A nominal maneuver of 50±0.5 degrees per axis.
- This data may be ratioed to account for different maneuver angles. The propellant consumption must be decreased by 10 percent for a 30-degree maneuver and increased by 20 percent for a 100-degree maneuver.

The manual single-axis maneuver propellant consumption is the same as the single-axis maneuver in paragraph 4.2.1.2.

4.2.1.2 Automatic Attitude Control Maneuvers and Attitude Hold.

S/M RCS propellant consumption rates for G&N control maneuvers (attitude control and attitude hold), versus S/C

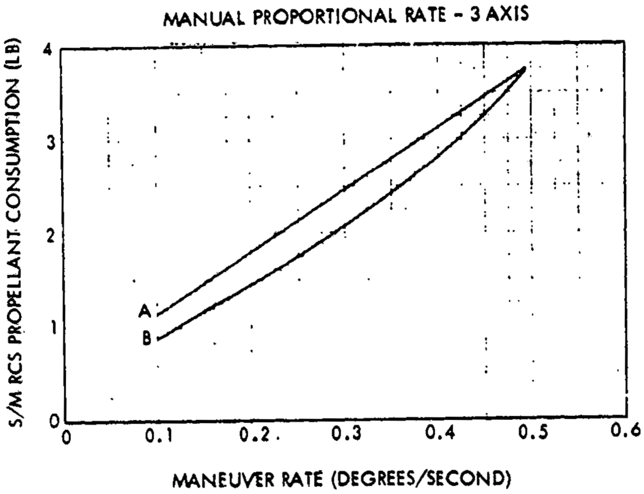

CURVE	WEIGHT (LB)	INERTIA (SLUG-FEET SQUARED)		
		I_{XX}	I_{YY}	I_{ZZ}
A	29,500	15,800	53,500	54,000
B	22,300	12,600	40,000	38,700

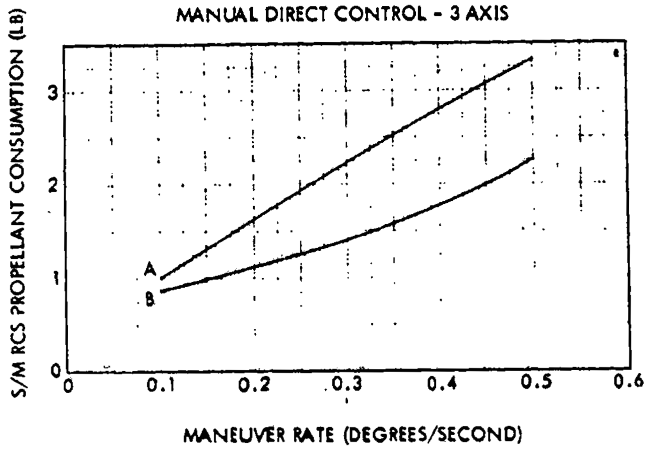

NOTE: WEIGHTS AND INERTIAS FOR CURVES A AND B ARE SAME AS SHOWN ON UPPER CHART.

TYPICAL MMDB INFORMATION

SM-2A-1087

Figure 4-13. S/M RCS Propellant Consumption During Manual Attitude Control Maneuvers weight, are presented in figure 4-14. The same assumptions in paragraph 4.2.1.1 also apply to figure 4-14, in addition to the following:

- Non-maneuvered axes are held with a narrow deadband of ±0.2 degree while the other axes are moved.
- A specific impulse (I_{sp}) for a single jet RCS firing per axis that equals 180 seconds.
- A maneuver rate of 0.5 degree per second.

The S/M RCS propellant consumption rates for the attitude thermal (barbecue) control mode versus S/C weight are presented in figure 4-15. Applicable additional assumptions are as follows:

- Attitude hold in pitch and yaw are at a deadband of ±4.2 degrees.
- Roll axis spin is 0.5 degree per second.

The S/M RCS propellant consumption required to damp free drift rates (caused by dynamic disturbances) versus time in free drift are presented in figure 4-16.

4.2.1.3 Translation Maneuvers.

S/M RCS propellant consumption required for settling SPS propellants versus S/C weight, for three configurations of RCS engine utilization, is presented in the upper chart of figure 4-17. The lower chart shows propellant required for RCS +X axis delta velocity maneuvers. Assumptions applicable to both charts in figure 4-17 are as follows:

- The RCS engine thrust equals 100 pounds.
- I_{sp} at attitude correction equals 185 seconds.
- I_{sp} at translation equals 278 seconds.
- Dynamic disturbances (stated in paragraph 4.2.1.1) are neglected.
- Roll control propellant requirements are neglected.

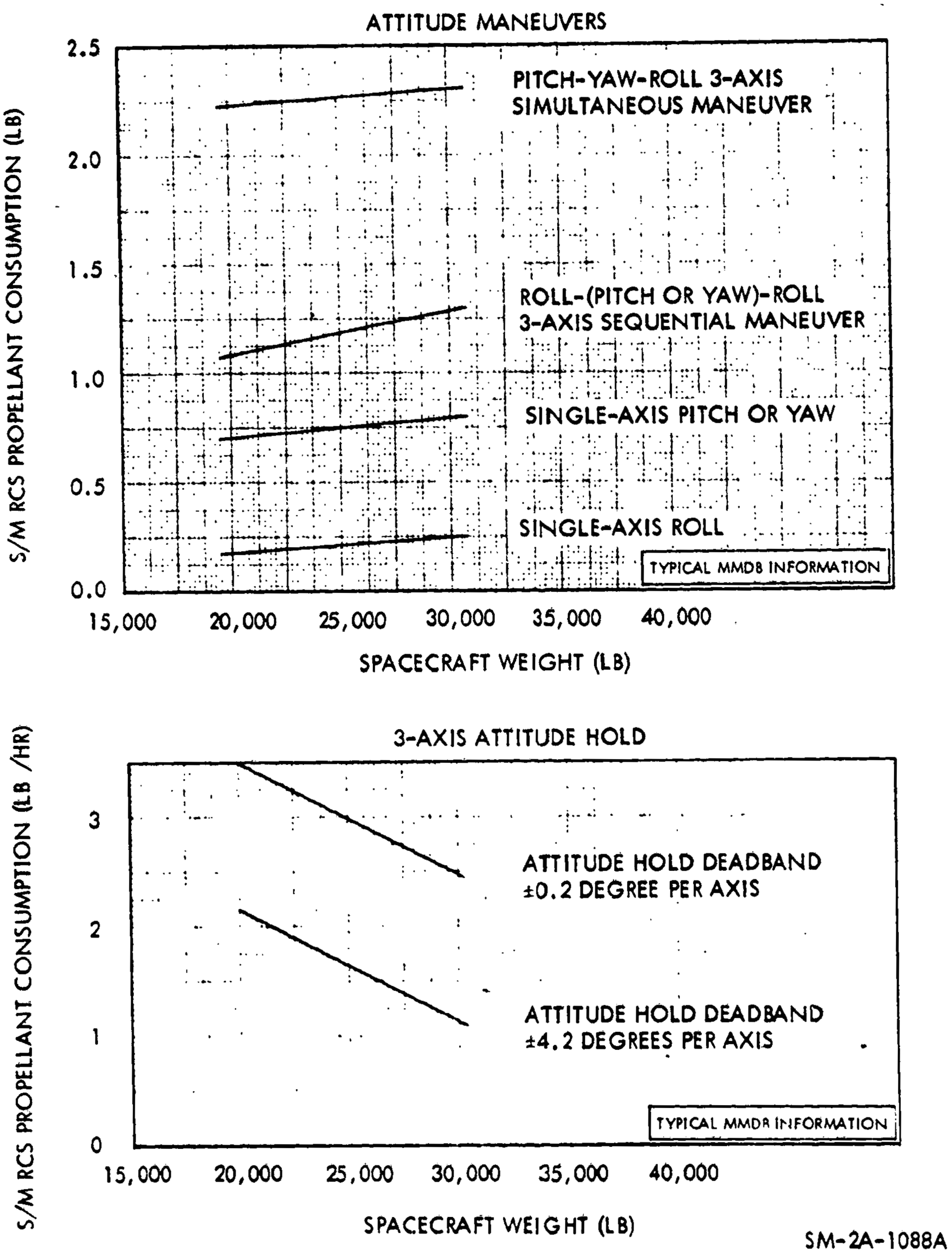

Figure 4-14. S/M RCS Propellant Consumption During Attitude Control Maneuvers and Attitude Hold

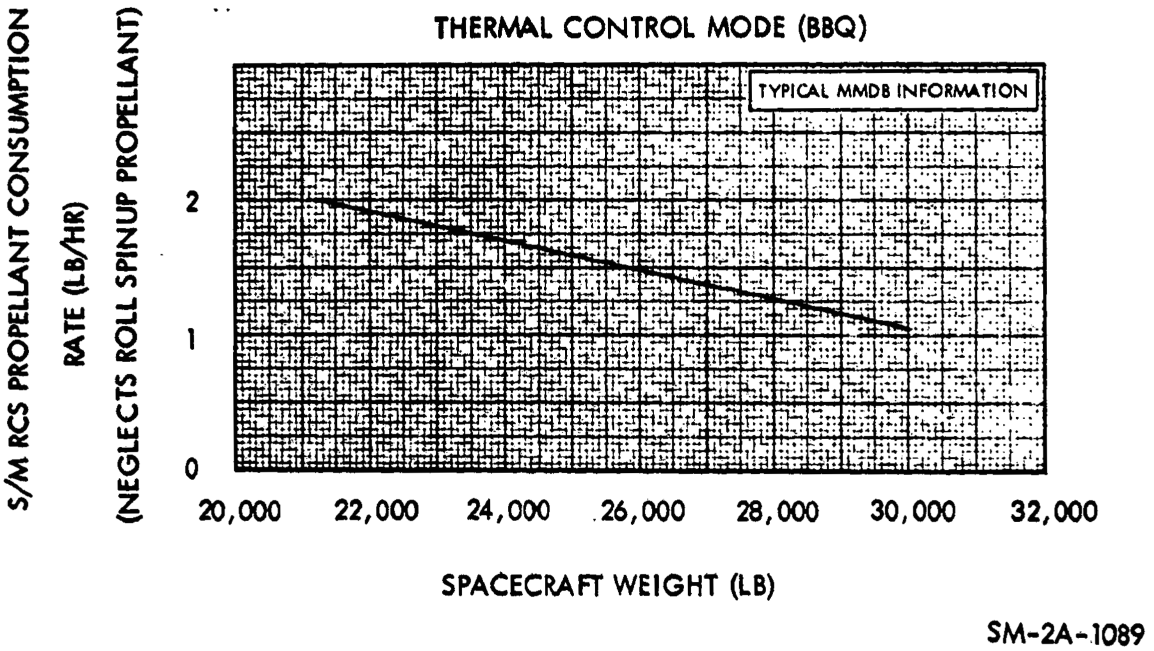

Figure 4-15. S/M RCS Propellant Consumption for Thermal Control Modes

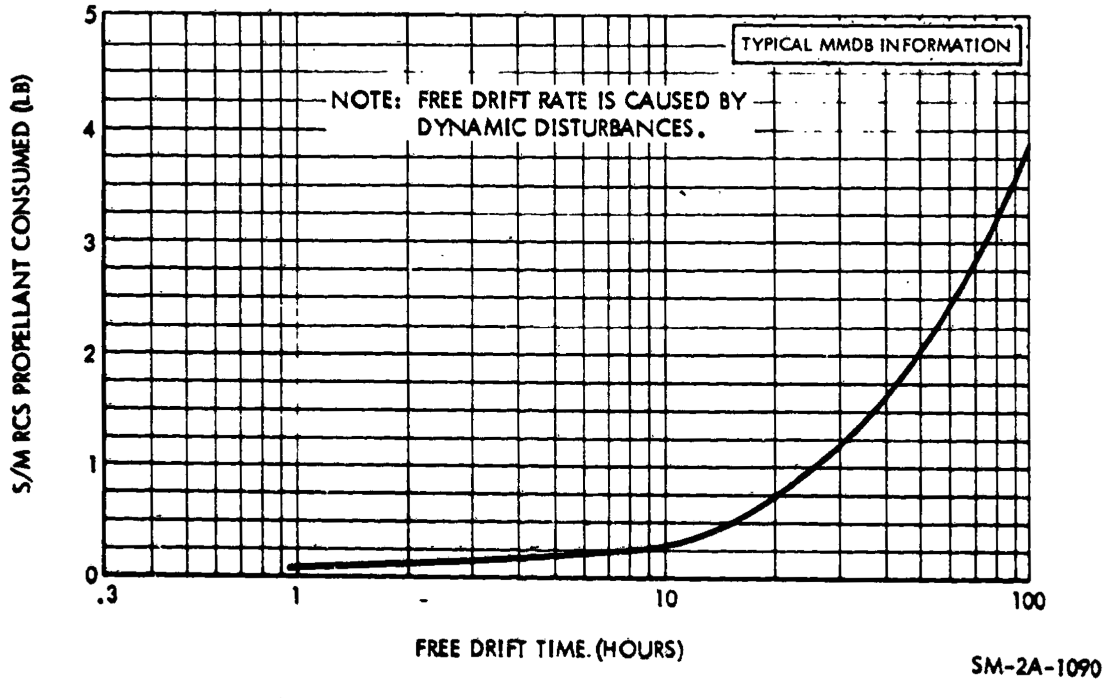

Figure 4-16. S/M RCS Propellant Consumption for Damping Out Free Drift Rate

CONFIGURATION	AXIS	S/M RCS ENGINES			
			USED FOR		
		DISABLED	ATTITUDE CONTROL		PLUS X TRANSLATION
			POSITIVE	NEGATIVE	
ONE	PITCH	3 & 4	1	2	2 & 1
	YAW	6 & 5	7	8	NONE
TWO	PITCH	2 & 1	3	4	NONE
	YAW	7 & 8	5	6	6 & 5
THREE	PITCH	NONE	3 & 1	2 & 4	2 & 1
	YAW	NONE	7 & 5	6 & 8	6 & 5

S/M RCS PROPELLANT REQUIRED FOR ULLAGE

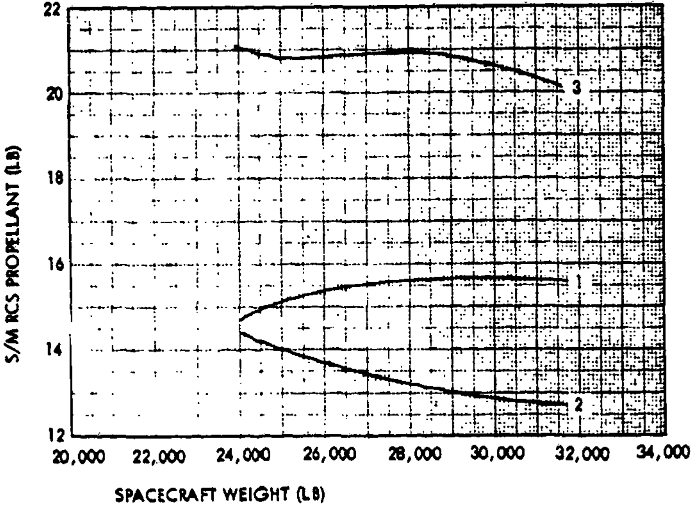

S/M RCS PROPELLANT REQUIRED FOR +X TRANSLATION

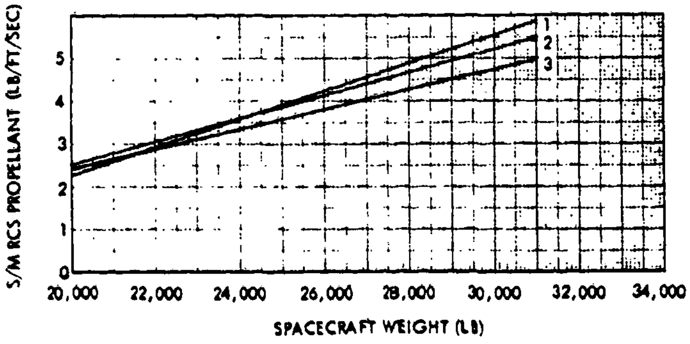

NOTE:

Curves 1, 2, and 3 represent same engine configuration as above.

TYPICAL MMDB INFORMATION

SM-2A-1091A

Figure 4-17. S/M RCS Propellant Consumption for SPS Propellant Settling and Translation Maneuvers

4.2.1.4 Attitude Hold Following SPS Burn.

S/M RCS propellant consumption required for attitude hold in three axes, immediately following an SPS burn and extending over a 10-minute period after the SPS burn, is presented in the upper chart of figure 4-18. (This curve includes the total RCS requirement and should not be added to the results obtained from figure 4-14. However, after the end of the 10-minute slosh damping period, the rates in the lower chart of figure 4-14 should be used.) For attitude holds delayed after the termination of an SPS burn, both charts in figure 4-18 are used for adjusting RCS propellant consumption rates.

4.2.2 C/M RCS PROPELLANT CONSUMPTION DATA.

Propellant consumables utilized by the 12 C/M RCS engines provide thrust for three-axes rotational and attitude control of the C/M (after an abort or during normal entry). The oxidizer/fuel ratio (by weight) for each of the four roll engines is 2.1±0.09:1 at a propellant consumption rate of 0.345 lb/sec. The oxidizer/fuel ratio (by weight) for each of the eight remaining engines is 2.0±0.09:1 at a propellant consumption rate of 0.342 lb/sec. Any remaining propellant, including the helium used as a pressurant, is ejected prior to C/M touchdown (for all mission modes). Nominal values for the individual C/M RCS consumables (usable tank capacity of 225 pounds) are as follows:

		Weight per Tank		
Consumables	Storage Tank	Filled (lb)	Usable (lb)	Delivery Rate to Engine
Nitrogen tetroxide (N_2O_4) (oxidizer)	2	89.2	75.0	0.228 lb/sec (oxidizer/fuel ratio of 2:1) 0.234 lb/sec (oxidizer/fuel ratio of 2.1:1)
Monomethylhydrazine (MMH) (fuel)	2	45.2	37.5	0.114 lb/sec (oxidizer/fuel ratio of 2:1) 0.111 lb/sec (oxidizer/fuel ratio of 2.1:1)
Helium (He) (pressurant)	2	0.52	0.52	N/A

S/M RCS PROPELLANT CONSUMPTION FOLLOWING AN SPS BURN

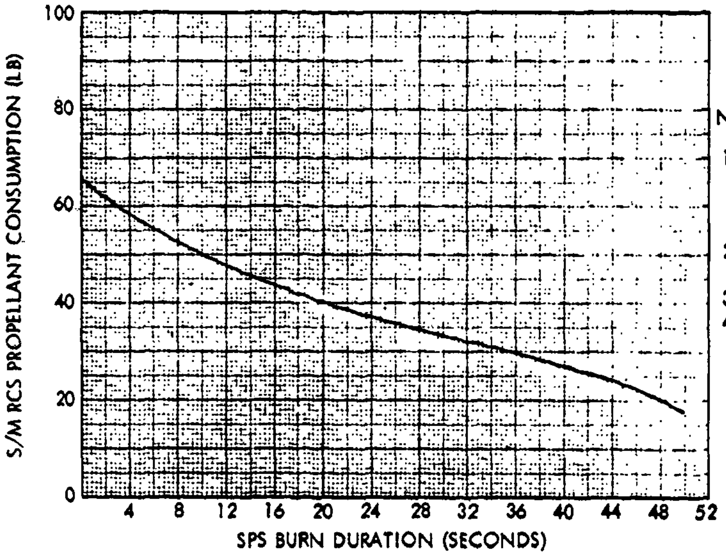

NOTES:

1. PROPELLANT CONSUMPTION IS BASED ON 3-AXIS HOLD INITIATED IMMEDIATELY FOLLOWING THE BURN FOR A PERIOD OF 10 MINUTES
2. HOLD IS IN MAXIMUM DEADBAND (4.2 DEGREES)
3. TWO ENGINE FIRINGS PER AXIS
4. OPEN-LOOP SLOSH MODEL

RELATIVE S/M RCS PROPELLANT CONSUMPTION VERSUS
DELAY IN ATTITUDE HOLD FROM END OF SPS BURN

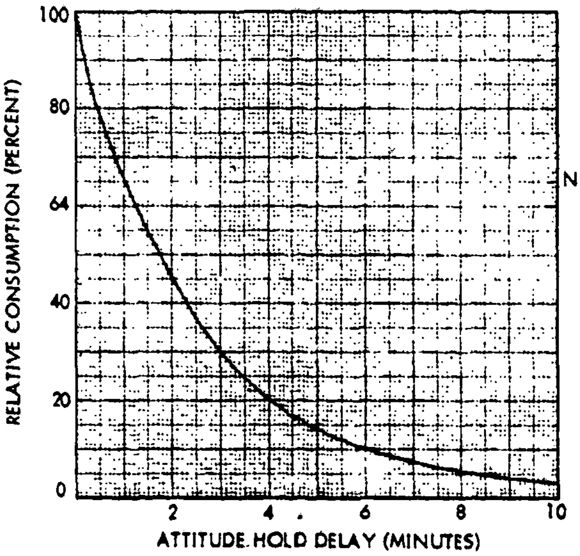

NOTE:

APPLY PERCENT TO PROPELLANT VALUE FROM CURVE ABOVE.

TYPICAL MMDB INFORMATION

SM-2A-1092

Figure 4-18. S/M RCS Attitude Hold Propellant Consumption Following SPS Burn

Representative C/M RCS propellant consumption time histories are presented in figure 4-19 for nominal and off-nominal single-system RCS entries. The curves include pre-entry propellant expended (5 pounds for nominal and 9 pounds for off-nominal rates).

4.2.3 SPS PROPELLANT CONSUMPTION DATA.

Propellant consumables utilized by the SPS engine (at 69.09 lb/sec) provide thrust for significant spacecraft velocity changes after booster separation. Nominal values for the SPS consumables are as follows:

Consumables	Storage (and Sump) Tank	Weight per Tank		Delivery Rate to Engine
		Filled (lb)	Usable (lb)	
Nitrogen tetroxide (N_2O_4) (oxidizer)	1	30,600	27,333	46.06 lb/sec
50% unsymmetrical dimethylhydrazine (UDMH/N_2H_4) (fuel)	1	15,300	13,677	23.03 lb/sec
Helium (He) (pressurant)	2	48.2	48.2	N/A

NOTE Storage tanks for the SPS fuel and oxidizer also include a sump tank. S/C 012 will not be scheduled to carry the possible total propellant load of about 45,900 pounds.

Spacecraft weight is plotted against characteristic velocity for nominal and minimum values of specific impulse. (See figure 4-20.) A sample path traces a typical solution for propellant weight when initial weight, specific impulse, and characteristic velocity change are given. Arrows on the chart, starting with an initial value for weight (W_1) indicate the direction of flow for the sample problem. It is important to note that the characteristic velocity (V_c) scale does not represent values of ΔV remaining aboard the S/C, but is intended to serve as a reference only on which increments (ΔV_c) may be taken as shown in the sample.

In order to account for a 4500 pound-seconds loss for each SPS engine start, 14.5 pounds of propellant must be added to the

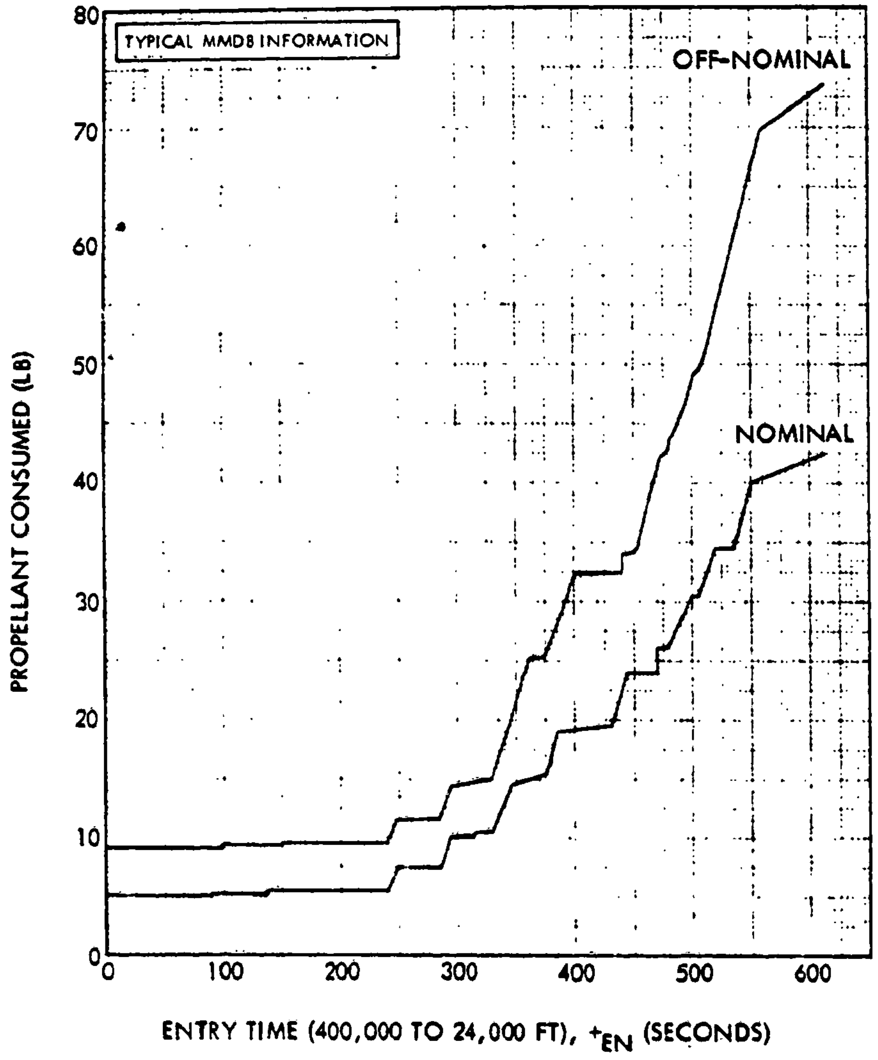

	NOMINAL	OFF-NOMINAL
V_g	24, 216 FPS	24, 216 FPS
γ_g	-1.65 DEG	-1.65 DEG
α	156 DEG	156 DEG
β	0 DEG	0 DEG
ϕ_{EN}	0 DEG	0 DEG
$C\ell_o$	-0.0004 DEG	-0.00006
GUST	NONE	HALF SINE WAVE
σ	52.7 DEG	52.7 DEG
RANGE	1547 NM	1547 NM

SM-2A-1093

Figure 4-[illegible] C/M RCS Propellant Consumption Time Histories - Single System

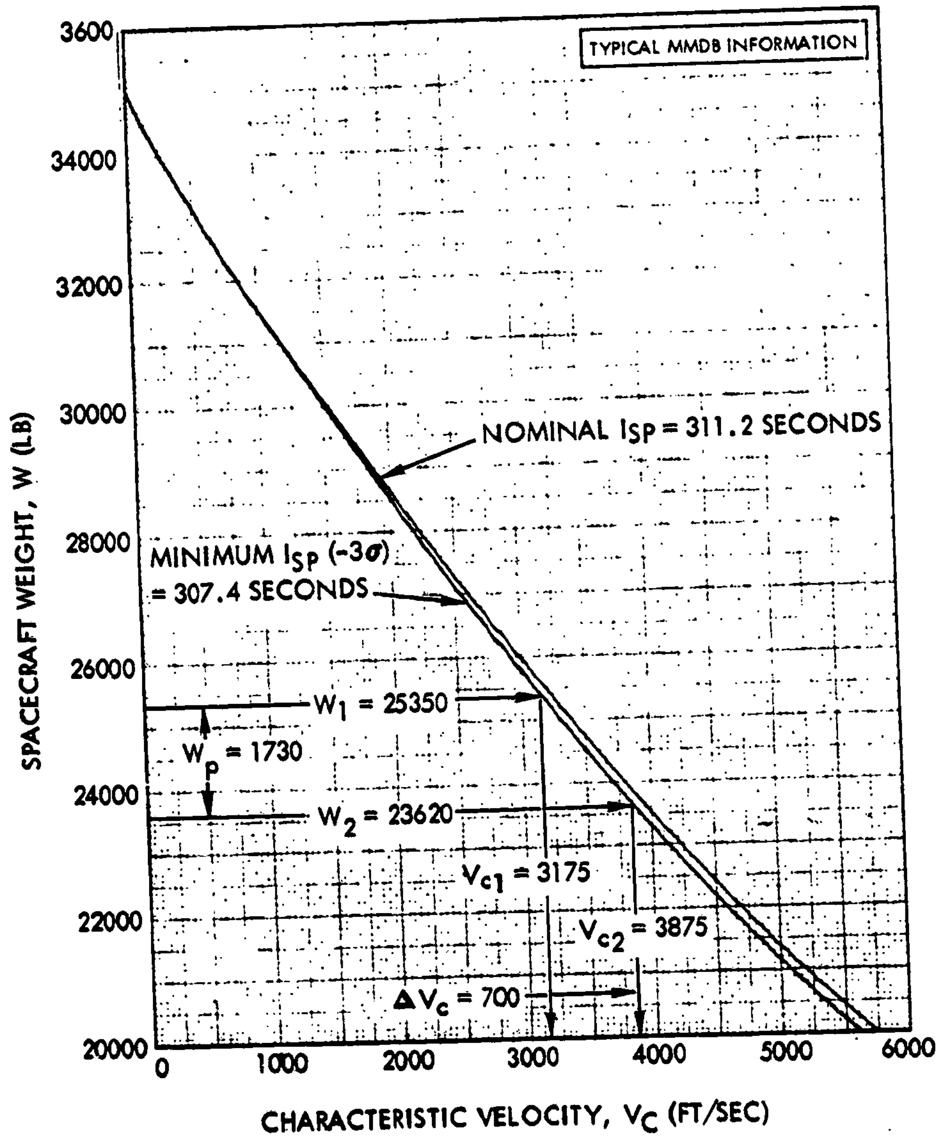

GIVEN: INITIAL SPACECRAFT WEIGHT, W_1
SPECIFIC IMPULSE, I_{SP}
CHARACTERISTIC VELOCITY
CHANGE, ΔV_c
$g = 32.174$ FT/SEC^2

PROPELLANT WEIGHT, $W_P = W_1\left[1-\dfrac{1}{e^{\left(\dfrac{\Delta V_c}{g\,I_{SP}}\right)}}\right]$

SM-2A-1094

Figure 4-20. SPS Propellant Consumption

propellant consumption noted during each firing. (The total propellant requirements are limited to the total usable propellants available to the S/C.)

4.2.[illegible] EPS AND ECS CONSUMPTION DATA.

Oxygen and hydrogen reactants (from the cryogenic storage system) are consumed by the EPS fuel cell power plants in the generation of electrical power for the S/C. Water, as a byproduct, is provided for the ECS. Oxygen from the cryogenic storage system is also supplied to the ECS for metabolic consumption by the crewmembers and for pressurization of the crew compartment and the PGA. The cryogenic tanks for oxygen and hydrogen are initially filled to at least 97 percent of full capacity. Nominal values for these consumables are as follows:

Consumables	Storage Tank	Weight per Tank		Flow Rate to System
		Filled (lb)	Usable (lb)	
Hydrogen (H_2) (supercritical gas)	2	29.0	28.0	0.14 lb/hr (min) 0.27 lb/hr (max) (0.75 lb/hr-purge only)
Oxygen (O_2) (supercritical gas)	2	327.0	320.0	1.70 lb/hr (min) 2.58 lb/hr (max) (0.6 lb/hr-purge only)
Nitrogen (N_2)(fuel cell reference pressure)	3	0.44	0.44	N/A

NOTE Both the EPS and ECS utilize oxygen from the same cryogenic storage system (489 pounds of usable O_2 for the EPS and 151 pounds for the ECS).

4.2.[illegible] EPS Fuel Cell Reactants Consumption.

The O_2 and H_2 consumption versus electrical output for one, two, or three fuel cell power plants is shown in figure 4-21. Only the H_2 curve is given. (The O_2 consumption rate is eight times the H_2 rate.) Water generated by the fuel cells may be calculated by multiplying the H_2 consumption rate by nine.

NOTE:
WATER GENERATION RATE IS OBTAINED BY MULTIPLYING H_2 CONSUMPTION RATE BY NINE

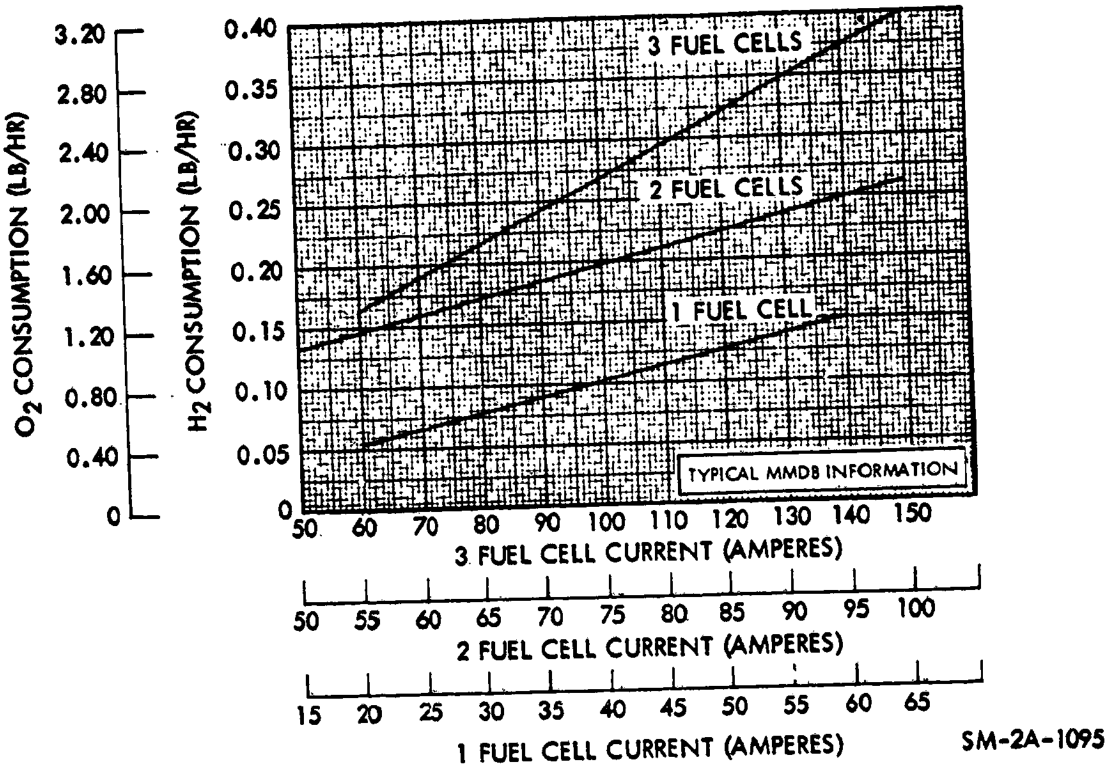

Figure 4-21. Cryogenic Consumption Versus Fuel Cell Current

In order to maintain fuel cell operating efficiency, purging of each power plant is accomplished every 7 hours. The purges will normally be staggered so that a H_2 purge will follow an O_2 purge by 3.5 hours. The present purging cycle of 7 hours is based upon the maximum normal power output of 1420 watts per fuel cell. The time between purges is based upon the ratio of the present maximum of 1420 watts/fuel cell power plant to the actual maximum gross power demand times 7 hours. Thus, if the actual maximum gross power demand is 710 watts/fuel cell module, the nominal purge interval of 7 hours would be increased by 1420/710 or 2. Multiplying 2 times 7 would then provide a purge interval of 14 hours. During purging, the power plant continues to consume reactants in the quantities required to produce the power demanded by S/C electrical loads. The duration of each H_2 purge is 80 seconds and 120 seconds for each O_2 purge.

4.2.4.2 EPS Electrical Power Output.

During a normal mission, from launch until entry, about 618 kwh of electrical power is supplied to the S/C by three fuel cell power plants operating in parallel. If one power plant should fail, the remaining two will provide for normal power loads. In the event two power plants fail, S/C emergency loads can be accommodated. The three batteries, normally reserved for entry and postlanding phases of the mission, can be utilized to provide for peak loads above operating fuel cell capacities.

NOTE The EPS [illegible] minimum steady-rate power level of 16[illegible] with three fuel cells operating or 1550 watts with [illegible] fuel cells operating during orbit. However, [illegible] minimum transient power level of 1500 watts for three fuel cells can be reached without causing an overvoltage in the EPS. (Tests are being conducted to determine if a minimum transient power level of 1200 watts for three fuel cells is feasible.)

- By draining [illegible] battery power and recharging, an additional [illegible] of energy [illegible] obtained for use during orbital flight.
- The S/C is capable [illegible] sustaining an emergency power load of 120[illegible] watts with [illegible] fuel cell operating during orbit.

4.2.4.3 ECS Oxygen and Water Consumption.

Oxygen and water consumables are utilized by the ECS in providing for needs peculiar to the presence of men aboard the spacecraft. Nominal values for the ECS consumables are as follows:

Consumables	Source	Usable Weight (lb)	Remarks
Oxygen (O_2)	Cryogenic storage system tanks (2). NOTE The cryogenic storage system supplies O_2 to both the ECS and EPS (151 pounds for the ECS and 489 pounds for the EPS).	151.0	The basic purpose of the ECS oxygen is for crew metabolic consumption and control of the C/M pressure as follows: a. Metabolic - three men at 0.075 lb/hr/man or 0.225 lb/hr total b. C/M leakage - 0.2 lb/hr

Consumables	Source	Usable Weight (lb)	Remarks
			c. 2 C/M repressurizations - 11.7 lb (5.85 lb/ea).
	Surge tank	3.7	Initially filled during ground service
	Entry tank	1.0	Initially filled during ground service
Potable water	One C/M potable water supply tank	36.0	Initially filled during ground service; the tank is replenished during flight by the EPS fuel cell power plants at a nominal rate of 0.77 lb per kilowatt. If tank is full, water will overflow into C/M waste water tank.
Waste water	One C/M waste water supply tank	56.0	Initially filled during ground service and then by overflow of water from potable water tank.
	Two S/M water supply tanks	112.0	Additional supply of water is carried in S/M to replenish C/M water tanks, if necessary.
Nitrogen (N_2) (pressurant)	One N_2 supply tank	1.5	Used to pressurize the S/M water supply tanks.

NOTE The ECS potable water will be primarily used for metabolic purposes by the crew and not for cooling purposes in the S/C (unless waste water becomes depleted).

- The ECS radiator inlet temperature is affected by heat transfer from EPS components. As the components become warmer from increased electrical loads, a greater rate of heat transfer will take place. ECS radiator freezing may result if both radiators are exposed to deep space for more than 1 hour and the inlet temperature is below 75°F with an electrical current level of about 55 amps By rolling or tumbling the S/C, to allow for periodic exposure of the radiators to the sun, the inlet temperature can be 70°F with an electrical current level of about 50 amps before the space radiators start to freeze.

4.3 RCS AND SPS THRUSTING DATA.

4.3.1 RCS TRANSLATION CONTROL.

Spacecraft translation is possible at any time after S-IVB separation and prior to the time when S/M-C/M separation occurs. Translation maneuvers are provided through the S/M RCS engines and are normally initiated manually by the translation control T-handle in the ±X, Y, and Z axes, or by the DIRECT ULLAGE switch in the +X axis. The translation control (manipulated in the counterclockwise position to the abort detent for about 2.5 seconds) also provides for CSM/S-IVB separation. While the control is in the abort detent position, the CSM attitude is not controlled. Upon confirmation of physical separation, the translation control is moved to the +X position and the SCS initiates attitude control to a maximum deadband of 5 degrees. (Refer to section 2 for systems operation.)

NOTE Each S/M RCS engine nominally develops 100 pounds of thrust. If four engines are ignited (as in a ±X translation), the S/C will accelerate at 0.4 to 0.8 ft/sec^2, depending on the S/C weight and control mode. (Only two engines are ignited for ±Y and ±Z translations.)

- The minimum RCS impulse duration, assuming average human response, is on the order of 200 milliseconds. The maximum translation duration is a function of the available propellant.

4.3.2 RCS ROTATION CONTROL.

Automatic or manual rotational control of the S/C is provided in both the G&N and the SCS control modes. (Refer to section 2 for systems operation.)

NOTE The S/C can have a maximum angular acceleration from 1.0 to 1.5 degrees per second^2, depending on the S/C mass configuration and RCS engines fired.)

4.3.2.1 G&N Attitude Control.

During the G&N attitude control mode, the inertial measurement unit (IMU) maintains the primary inertial attitude reference for the S/C. Rotation changes are commanded by either the Apollo guidance computer (AGC) when verb 70 is entered in the S/C display keyboard (DSKY) for manual maneuvers with the rotation control, or by manually dialing the coupling display units (CDU) for maneuvers preprogrammed in the AGC.

NOTE The AGC can be programmed to command a three-axis 60-degree reorientation of the S/C (and is similar in operation to an attitude orientation maneuver for an IMU alignment).

- All preprogrammed AGC maneuvers are executed at an attitude rate of 0.5 degree per second (4.0 degrees per second for abort or entry maneuvers only). In the G&N mode, a ±4.2 degree maximum or a ±0.2 degree minimum attitude error deadband is available The S/C will have a limit cycle rate of less than 0.2 degree per second within these deadbands.
- G&N attitude maneuver rates (used for IMU fine alignments and checks) are limited by the G&N digital program to 0.5 degree per second in pitch, roll, and yaw.

4.3.2.2 SCS Attitude Control.

During the SCS attitude control mode, the body mounted attitude gyros (BMAG) provide an automatic reference for holding the S/C at a specific attitude within a ±4.2 degrees maximum or a ±0.2 degree minimum attitude error deadband. If the S/C is then maneuvered manually by the rotation control, the attitude gyro coupling unit (AGCU) will automatically cage the attitude gyros, correct the attitude hold reference, and present a new display on the FDAI when the maneuver is completed.

4.3.2.3 Manual Attitude Control.

Manual maneuvers for attitude control of the S/C are provided by use of the rotation control for direct and proportional rates, and by the attitude impulse control for low-rotational rates (minimum impulse). The primary purpose of the manual attitude controls and pertinent data are as follows:

1. Direct rotation control, for emergency and backup conditions, is commanded by use of the rotation control (stick) about the desired axes to its hard stops. Just before engaging the hardstops, a switch closes and applies a direct command to the RCS direct coils. Rate feedback is not used to cancel the stick movement, but the BMAG-AGCU loop is closed and maintains an attitude reference to its limits.

   NOTE The attitude rate, commanded by direct rotation, is limited only by human endurance and the RCS propellant supply. Start and stop transients depend on pilot technique and the attitude reference (FDAI or visual landmark) used to close the outer control loop. The inertial references start to accumulate error (due to gyro slue rate limitations) at a rate of 20 degrees per second about the roll axis and 5.0 degrees per second about the pitch or yaw axis.

2. Proportional rotation control, for attitude corrections, is commanded by displacement of the manual S/C rotation control (stick) into a desired proportional rate (when referring to S/C attitude display on the FDAI).

   NOTE The resulting proportional rate will vary from a minimum of 0.2 degree per second to a maximum of 0.65 degree per second (depending on stick displacement). Attitude error deadbands are ±4.2 degrees maximum and ±0.2 degree minimum.

3. Attitude impulse control, for commanding low-rotational rates about all three axes, is available in either G&N or SCS modes of operation and is used as required during navigational sighting periods. This is accomplished through the attitude impulse control located on panel 105.

   NOTE After the attitude impulse control is enabled and displaced, a switch closure in the control unit will cause one pulse of 18±4 milliseconds, which is applied to the RCS jet selection logic. (One pulse is generated for each attitude impulse switch closure.)

- Attitude impulse control is not a proportional control and does not provide for attitude hold. When this control is enabled, relay action removes all rate attitude error and control inputs from the SCS electronics.

- Use of minimum impulse (for fine adjustment of S/C attitude) excites rates of about 0.01 degree per second minimum to 0.5 degree per second maximum.

4.3.3 SPS ENGINE THRUST PERFORMANCE.

4.3.3.1 SPS Small-Impulse Operation.

The SPS engine is capable of accepting a shutdown signal at any time after receipt of a start signal. A nominal minimum impulse bit of 12,000 pound-seconds is developed when the engine is fired for an open-loop operation period of 0.6 seconds. (See figure 4-22.) The run-to-run minimum impulse-bit tolerance is ±300 pound-seconds (1 sigma). Impulse value as a function of start-to-shutdown signal duration (FS1 to FS2), is estimated from qualification tests generated at AEDC (Arnold Engineering Development Center). (Propellant consumption for small impulse firings including the 14.4-pound propellant loss for each SPS engine start is covered by the equation $W_p = (\text{Impulse} + 4500)/\text{Isp}$.

4.3.3.2 SPS Engine Start and Shutdown Transients.

The SPS engine start and shutdown transients are presented in figure 4-23. Curves show the percentage of rated thrust as a function of elapsed time from start (FS1) and shutdown (FS2) command signals. Rated thrust is based on nominal inlet condition. All data estimates are from AEDC qualification tests. The start transient total impulse from FS1 to 90-percent rated thrust is limited to the range from 100 pound-seconds (minimum) to 400 pound-seconds (maximum). The run-to-run tolerance on start transient impulse is ±100 pound-seconds (1 sigma). The shutdown impulse from FS2 to 10-percent rated thrust is limited to a range from 8000 pound-seconds (minimum) to 12,000 pound-seconds (maximum). The run-to-run tolerance on the shutdown impulse is ±300 pound-seconds (1 sigma).

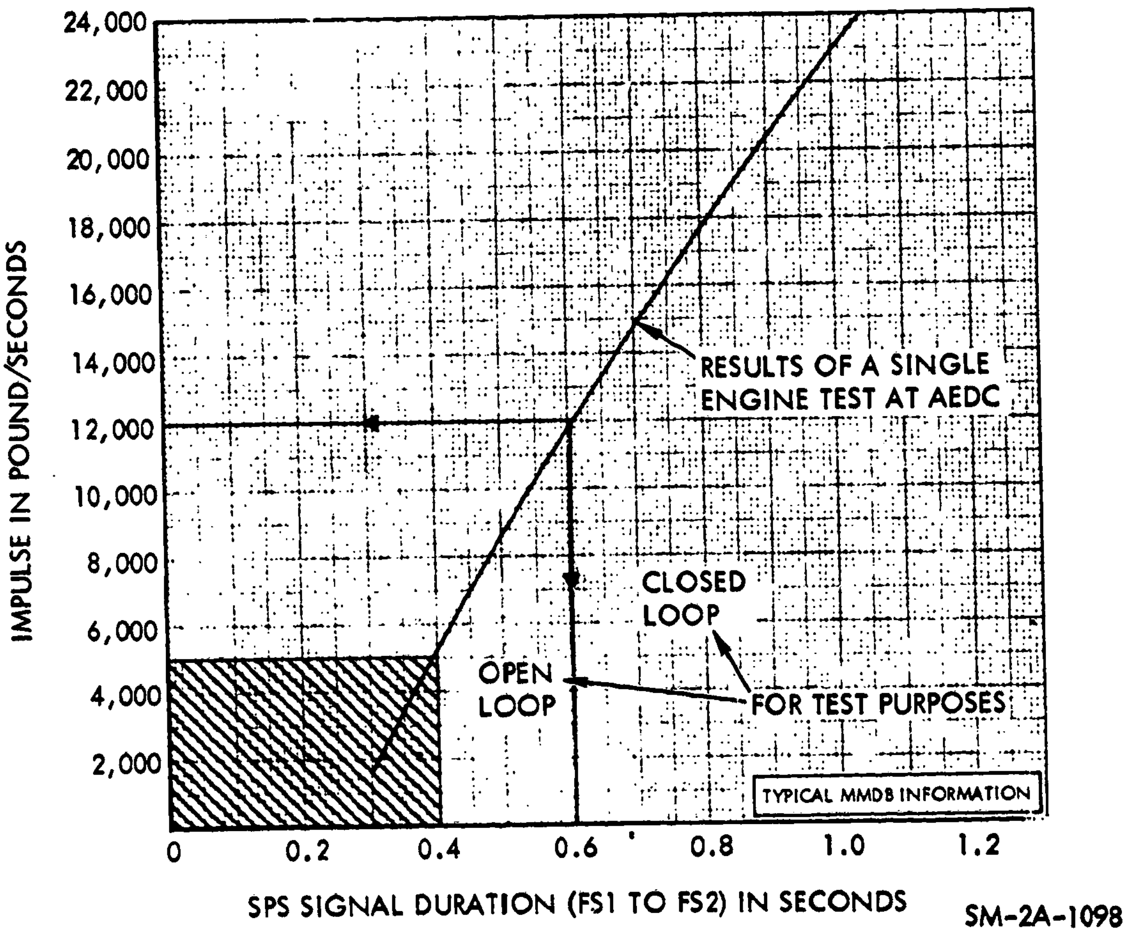

Figure 4-22. SPS Small Impulse Firings for Open-Loop Operations

4.3.3.3 SPS Delta V Capability.

The SPS delta V capability remaining versus SPS propellant remaining is presented in figure 4-24.

4.3.3.4 SPS Engine Gimbal Angle Determinations.

The engine gimbal angle determinations for an SPS firing (thrust vector through center of gravity) can be calculated during

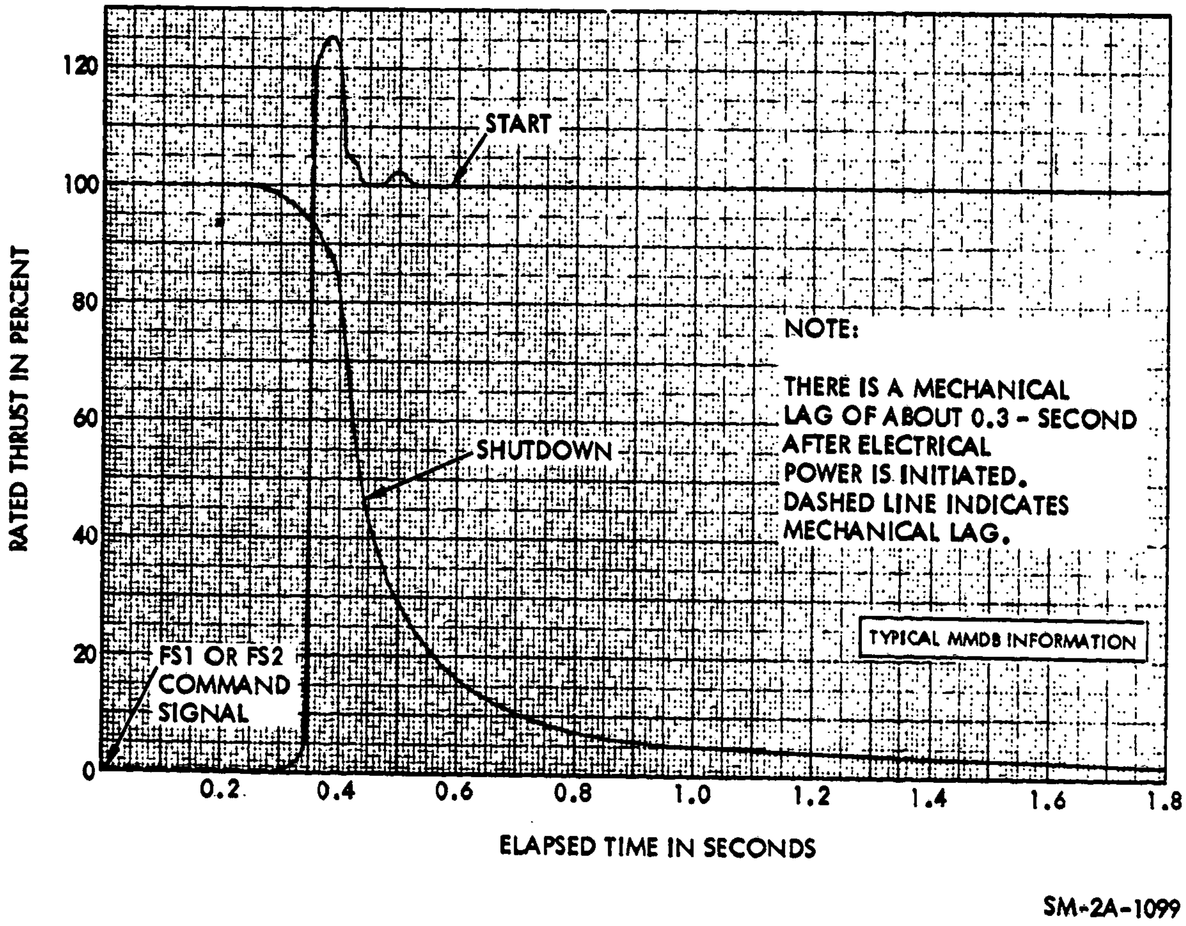

Figure 4-23. SPS Engine Start and Shutdown Transients

flight by the amount of SPS fuel remaining aboard the spacecraft. (See figure 4-25.) The ground controller will determine SPS engine gimbal angles if propellant leaks and/or other than nominal oxidizer to fuel ratios occur.

4.4 S/C OPERATIONAL CONSTRAINTS AND LIMITATIONS.

4.4.1 OPERATIONAL CONSTRAINTS.

Attitude constraints are necessary to prevent excessive exposure of certain spacecraft surface features to solar heating, earth albedo, or deep space. These constraints are required to control temperatures for the ECS radiator inlet, S/M RCS engines, SPS propellant feedlines, and the heat shield.

ORIGINAL PAGE IS
OF POOR QUALITY

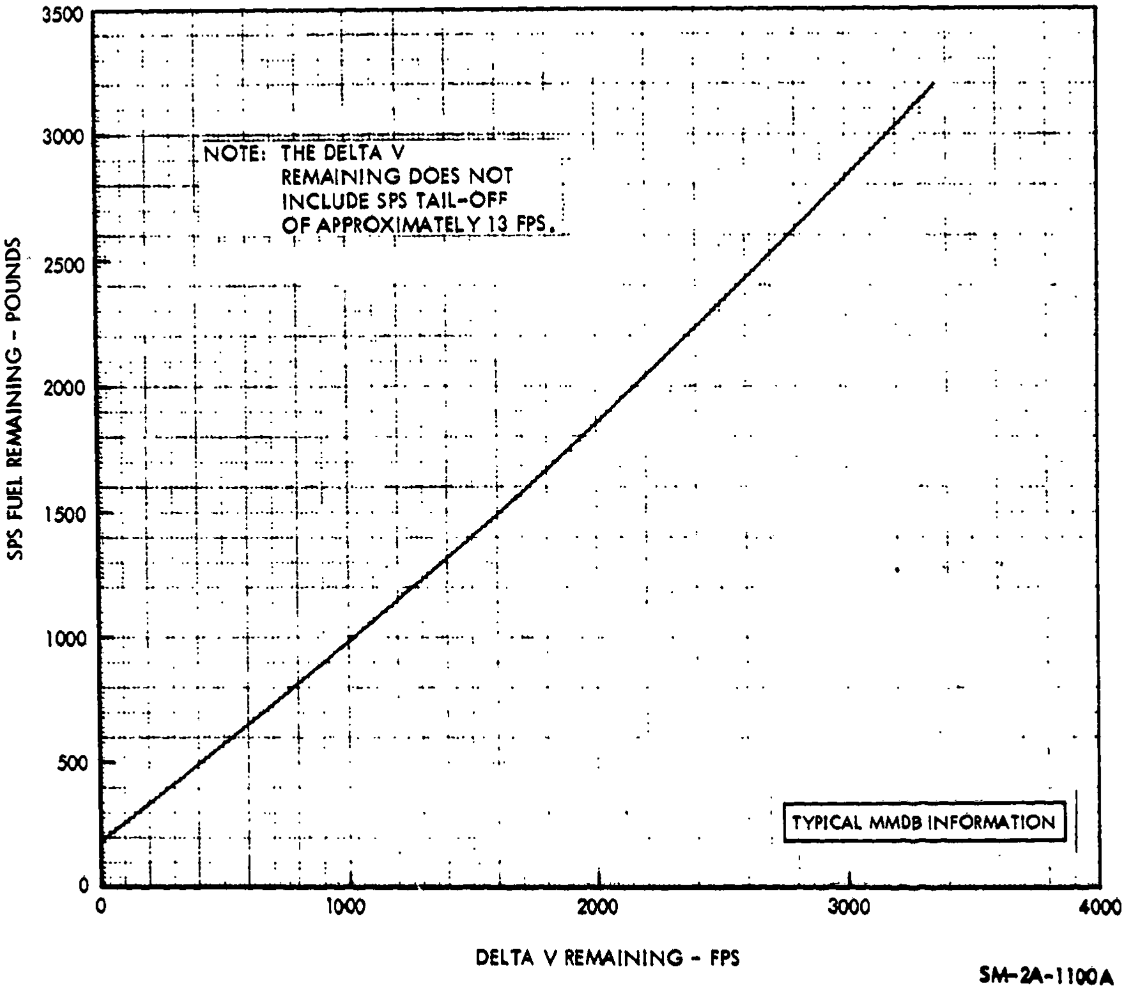

NOTE: THE DELTA V REMAINING DOES NOT INCLUDE SPS TAIL-OFF OF APPROXIMATELY 13 FPS.

SM-2A-1100A

Figure 4-24. SPS Delta V Remaining Versus Propellant Remaining

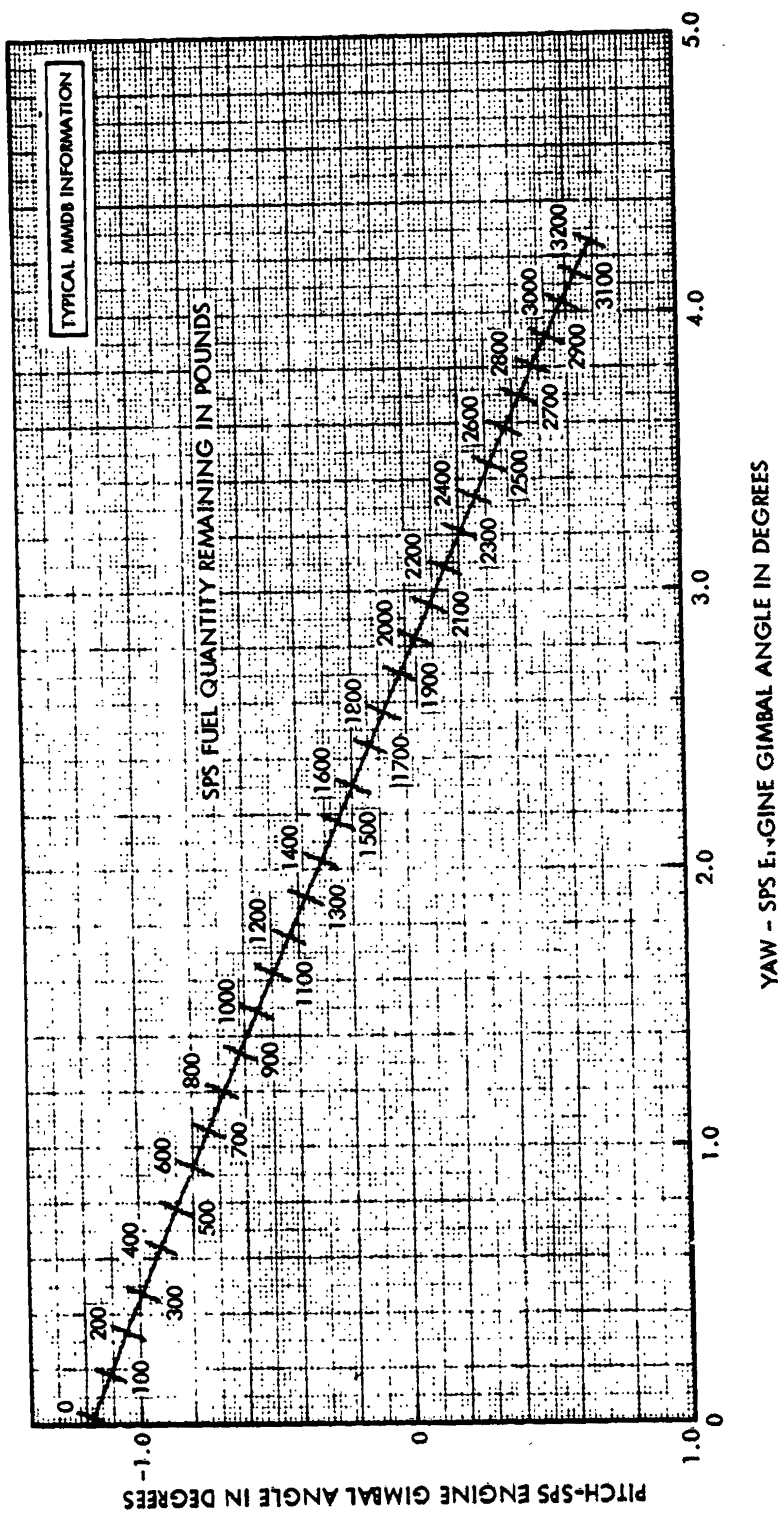

SM-2A-780C

Figure 4-25. SPS Engine Gimbal Angle Settings

4.4.1.1 ECS Radiator Inlet Temperature.

The ECS radiator inlet temperature (obtained from MSFN or the auxiliary DC volts meter on panel 200) should be maintained at 75°F or warmer to prevent against radiator freezing. However, excessive water boiling will result if the radiators are directly exposed to the sun for prolonged periods. S/C orientations exposing the ECS radiator surface to solar incidence angles less than 45 degrees should not be maintained longer than 20 minutes per orbit. Also, the S/C attitude should be constrained inertially or held fixed relative to the earth without roll for a period longer than one orbit, if the solar incidence to the radiator is less than 45 degrees. To prevent excessive water consumption (boiling) the S/C attitude must not be constrained in an inertial or earth-fixed orientation without roll for longer than 3 hours.

CAUTION Extreme radiator sooting can be detected by a rapid depletion of the water supply and high radiator outlet temperature.

- If the radiator outlet temperature averages above 53°F as a result of extreme sooting, high electrical loads, or poor radiator orientation, the water tanks will be depleted at a rate incompatible with the planned mission duration time.

NOTE Observance of ECS radiator constraints will also ensure a satisfactory environment for EPS radiator operation.

4.4.1.2 S/M RCS Engine Temperatures.

The S/M RCS engines are qualified to work within the range of 35° to 175°F, the propellant valve temperature limits. A red warning light on panel 10 will illuminate to indicate when the temperatures exceed this range. Temperatures above 175°F are not expected, except temporarily (possible) during boost. Heaters that cycle automatically are provided on each quad to maintain temperatures above the lower limit. However, if one quad is continuously pointed away from the sun for longer than 10 hours, it is possible for the 40°F lower temperature limit (for the propellant) to be reached at the RCS tank outlet.

NOTE S/C attitude should be monitored during extended periods between RCS firings to ensure that safe temperatures are maintained.

C-4

4.4.1.3 SPS Propellant Feedline Temperatures.

SPS propellant feedlines are normally maintained above 40°F by heaters and insulation. The MSFN should monitor SPS external line temperatures and advise the crew whenever temperatures drop below 50°F. If S/C attitude is maintained so that the SPS is pointed away from the sun for an extended period and heater capacity is insufficient to maintain line temperatures above 40°F, the S/C should be reoriented until acceptable SPS line temperatures are reached.

4.4.1.4 Heat Shield Temperature.

The heat shield ablator lower temperature limit of -150°F can be exceeded and cause surface cracking if the thin (-Z) portion of the ablator is pointed away from the sun for longer than 3 hours. Because of the moderate response time, it is unlikely that a critical cold condition would be approached during the mission.

CAUTION If the heat shield ablator temperature is allowed to rise and remain above 200°F for any aggregate period longer than 2 hours, outgassing will result and cause a corresponding degradation to the ablator stress margin.

4.4.2 OPERATIONAL LIMITATIONS.

The available data in the subsequent paragraphs shows limitations imposed on the S/C and/or crew during ascent, descent or aborts, spaceflight, and entry.

4.4.2.1 Acoustic and Vibration Effects.

The crew will be exposed to acoustic and vibration effects during ascent (130 seconds), possible LES aborts (10 seconds), and entry (100 seconds). Vibration effects will also be experienced during high-altitude aborts (SPS induced) and spaceflight SPS firings. (See figures 4-26 and 4-27.)

4.4.2.2 Altimeter Error and C/M Base Pressure Effects.

The altimeter (barometric pressure indicator) error resulting from velocity pressures on the command module (below 14,000 feet) is shown in figure 4-28.

4.2.2.3 C/M Lift/Drag Profile and Entry Effects.

Charts showing the C/M lift/drag profile and time histories for normal entries are shown in figures 4-29 through 4-31.

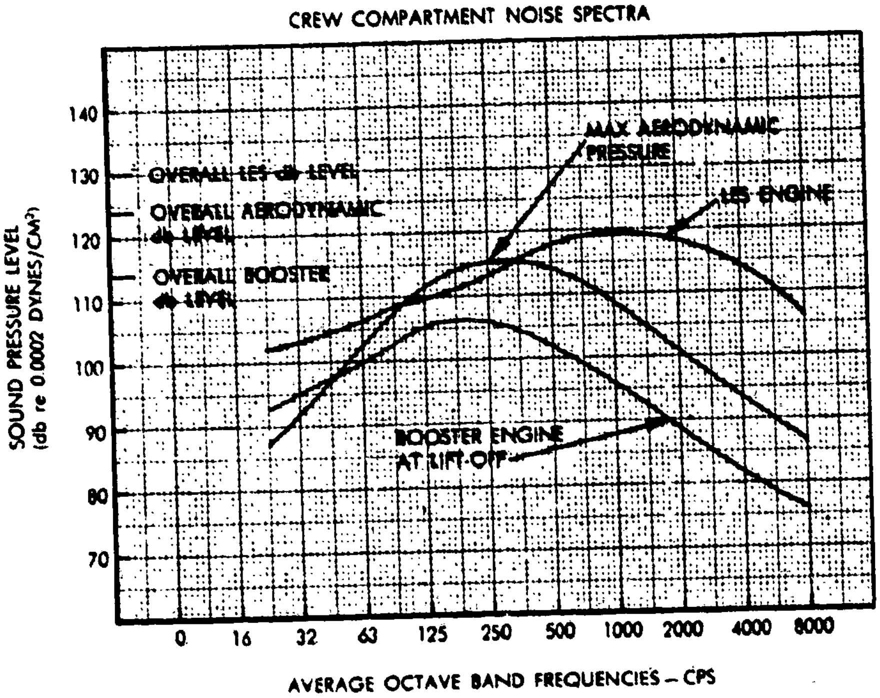

55 db = Sound pressure level (SPL) under average office conditions.
79 db = Maximum SPL inside S/C during space flight with all equipment operating.

NOTES: 1 During space flight, C/M inside noise level is mainly due to equipment operation. SPS and RCS engine firings have little effect on the internal noise level.

2 Each astronaut can reduce the crew compartment noise level about 15 db by utilizing his space suit and closing the helmet visor.

120 db = SPL where discomfort is experienced.
140 db = SPL where pain is encountered
160 db = SPL where the human ear drum can be ruptured.
200 db = SPL equivalent to a 50-pound TNT blast at 10 feet

SM-2A-934B

Figure 4-26. C/M Crew Compartment Acoustics

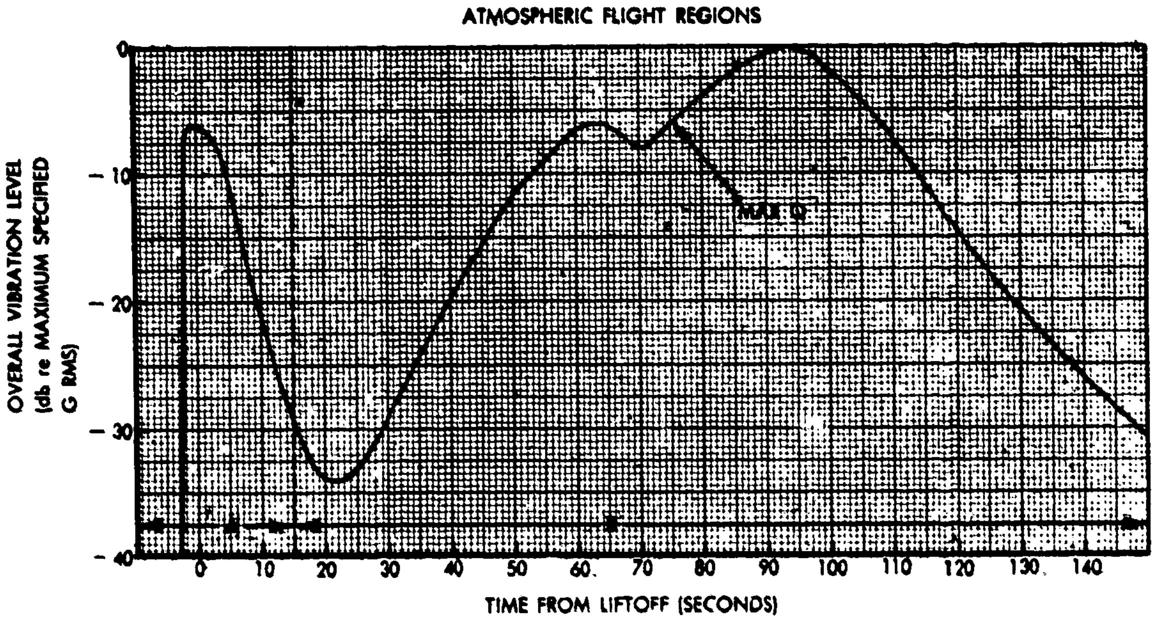

NOTES:

1. Zero on the vertical scale indicates the maximum vibration experienced during flight. The vibration levels are based on boilerplate and spacecraft flight test measurements.
2. Letter "A" indicates vibration time induced by booster engine exhaust (influenced by the flame buckets) and noise reflected from the ground and launch pad.
3. Letter "B" indicates vibration induced by aerodynamic turbulence. As the launch vehicle velocity increases, pressure fluctuations in the turbulent boundary layer (and wake turbulence from the launch escape tower) excite vibration of increasing intensity until a maximum is reached at approximately the time of maximum aerodynamic pressure (MAX Q).
4. SPS engine operation provides the only significant source of C/M vibration during space flight maneuvers. This vibration, transferred mechanically throughout the S/C structure, can generally be expected to decrease with increasing distance from the engine. Since the RCS engines possess a very low thrust capacity, their operation will only produce modest and localized vibration (mostly due to jet impingement)

SM-2A-933B

Figure 4-27. S/C-Relative Vibration Intensity Time History

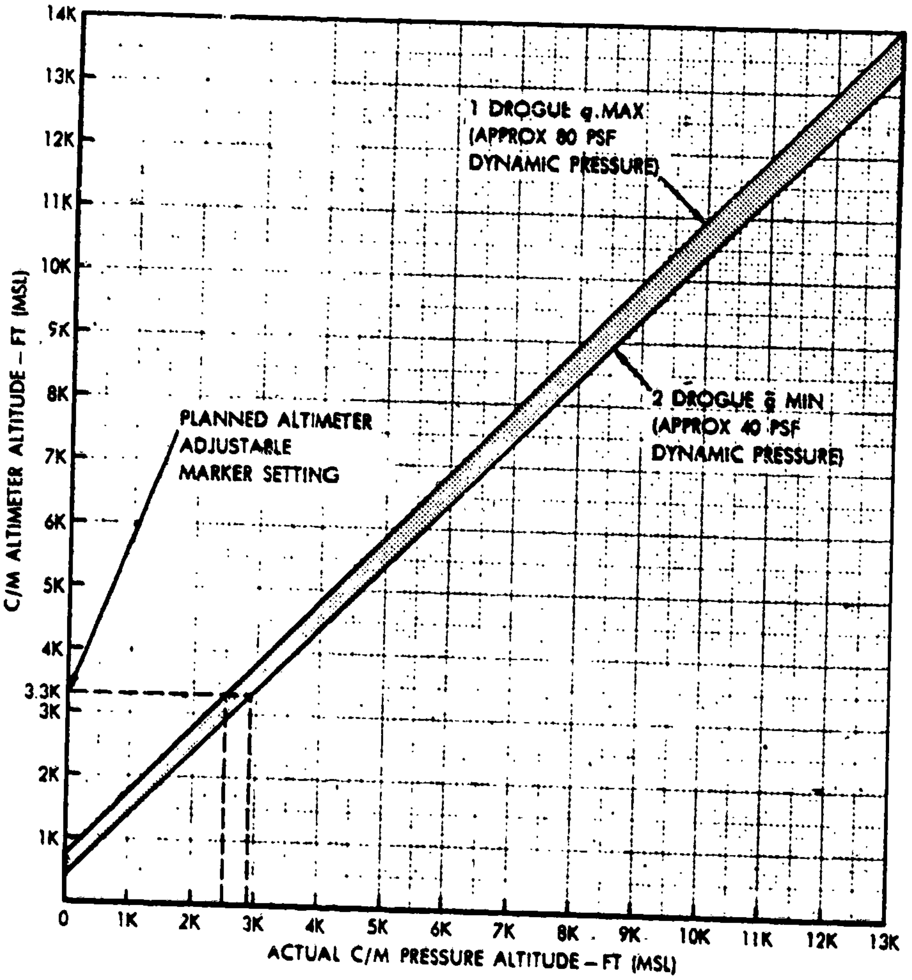

SM-2A-932A

Figure 4-28. Altimeter Error and C/M Base Pressure Effects

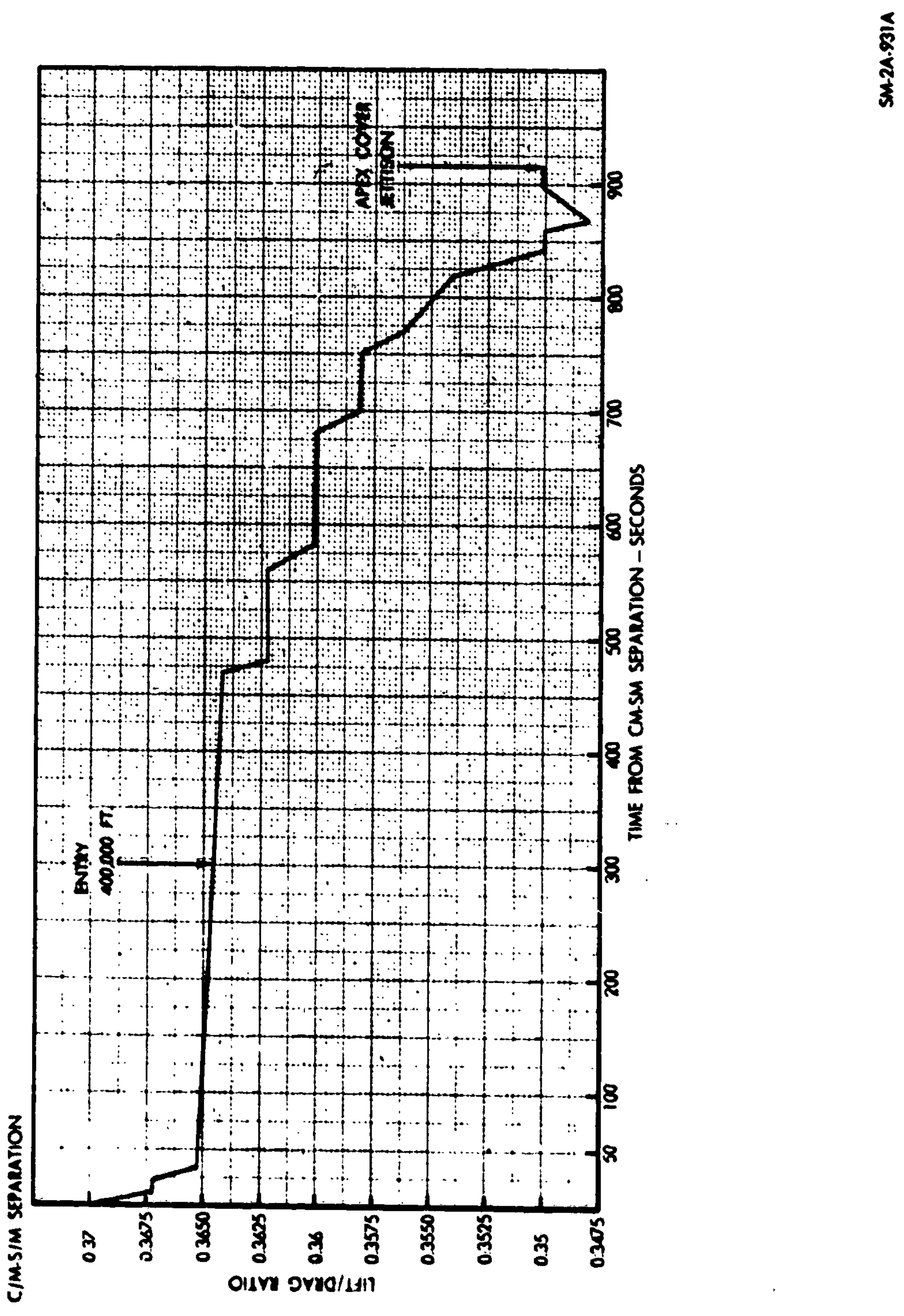

Figure 4-29. C/M Entry - Lift/Drag Profile

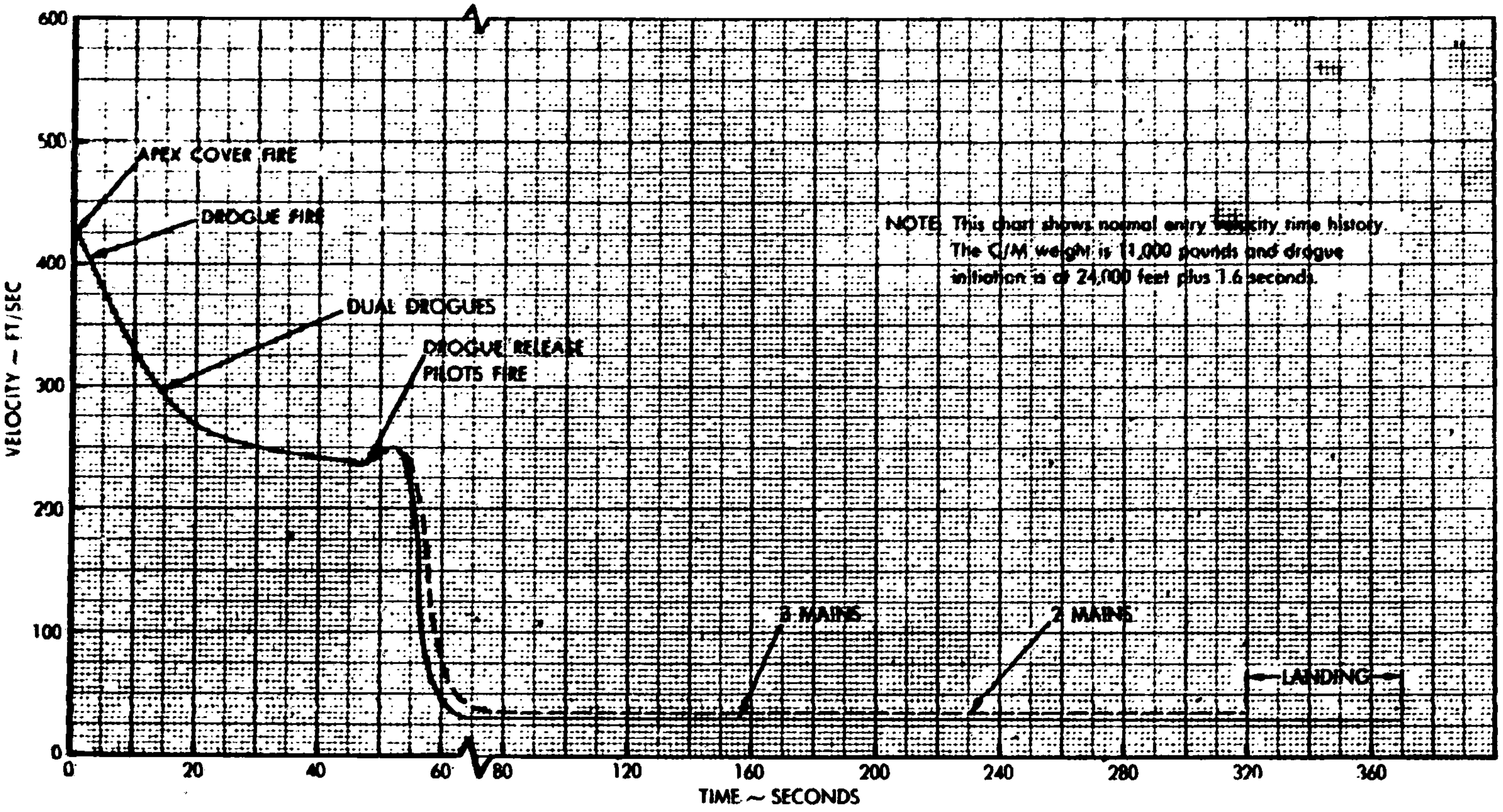

NOTE: This chart shows normal entry velocity time history. The C/M weight is 11,000 pounds and drogue initiation is at 24,000 feet plus 1.6 seconds.

SM-2A-930A

Figure 4-30. Normal Entry - Velocity Time History

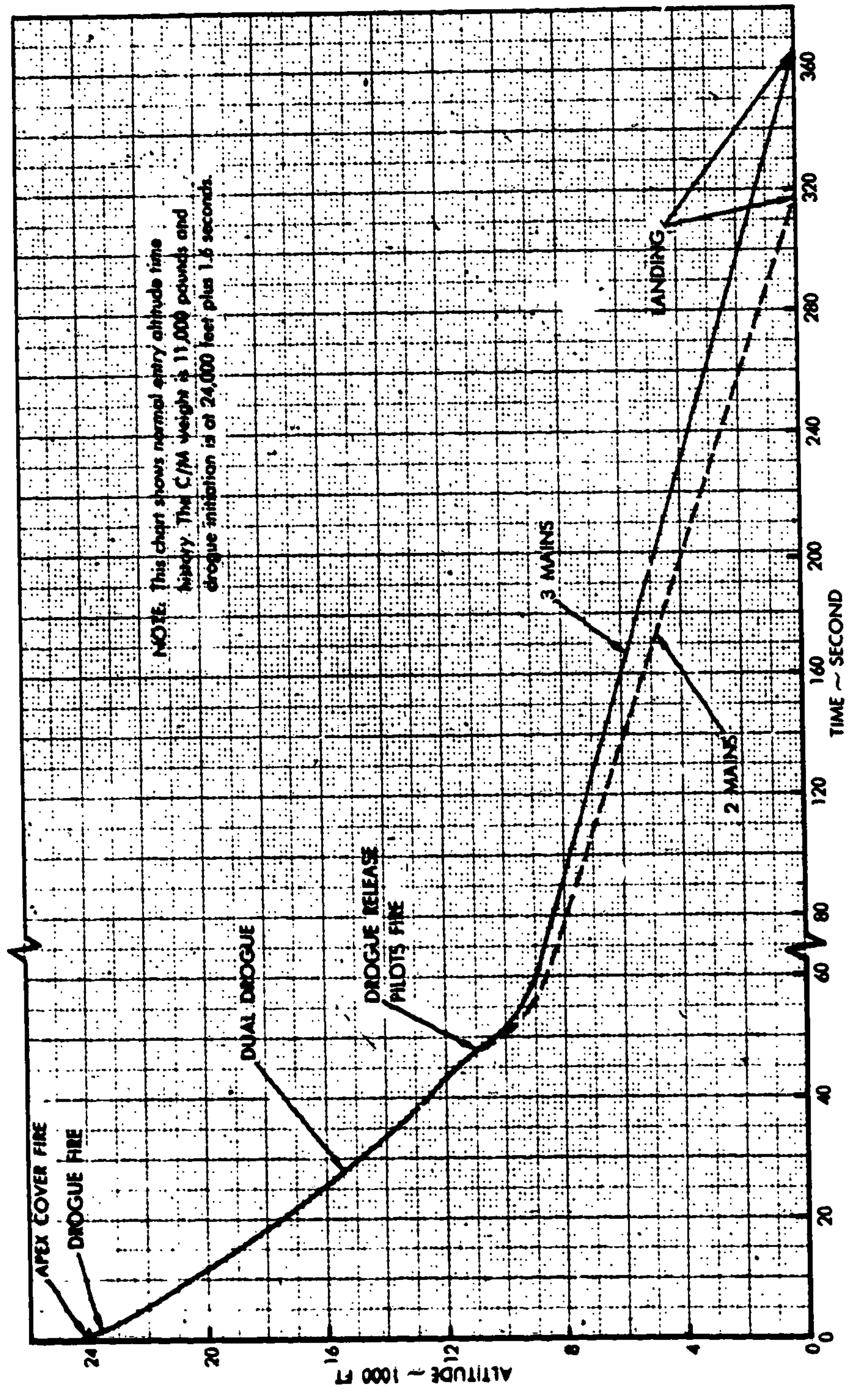

NOTE: This chart shows normal entry altitude time history. The C/M weight is 11,000 pounds and drogue initiation is at 24,000 feet plus 1.6 seconds.

Figure 4-31. Normal Entry - Altitude Time History

SECTION 5

EXPERIMENTS AND SCIENTIFIC EQUIPMENT DATA

INTRODUCTION

This section presents the objectives of mission 204A experiments and contains a description of associated equipment, stowage areas (figure 5-1), crew participation requirements for data collection, and related scientific equipment data. The in-flight tests are categorized as medical (M-), scientific (S-), and technical (T-) experiments as follows:

- In-Flight Exerciser (M-3A) (M003).
- In-Flight Phonocardiogram (M-4A) (M004)
- Bone Demineralization (M-6A) (M006)
- Human Otolith Function (Vestibular Effects)(M-9A) (M009)
- Cytogenetic Blood Studies (M-11) (M011)
- Cardiovascular Reflex Conditioning (M-48) (M048)
- Synoptic Terrain Photography (S-5A) (S005)
- Synoptic Weather Photography (S-6A) (S006)
- In-Flight Nephelometer (T-3) (T003).

NOTE The Planning and Management Office of the EPO (Experiments Program Office) is the coordinating facility for all of the experiments described in this section.

The experiments stowage areas location will be found in figure 5-1.

5.1 SCIENTIFIC EQUIPMENT.

5.1.1 MEDICAL DATA ACQUISITION SYSTEM (MDAS).

The medical data acquisition system, located in compartment C (figure 5-2), weighs 15.2 pounds and consists of a seven-channel tape recorder, associated signal conditioners, junction box, time code generator, and a front panel with switches and outlets for power and signal cables. This GFE unit uses 28-volt d-c power from compartment A to acquire and permanently record on magnetic tape all required medical (operational and experimental) data. The operational data required consists of electrocardiograph and impedance pneumograph outputs, while the experimental data consists only of phonocardiograph outputs. These medical parameters are routed from sensors and signal conditioners (attached to a crewman) through the PGA or CWG adapter cable, cobra cable, T-adapter, and octopus cable to specified channels in the MDAS. Although 100 watts of ectrical power is provided for the MDAS from compartment A via the topus cable, only about 19 watts are needed to operate the integral tape

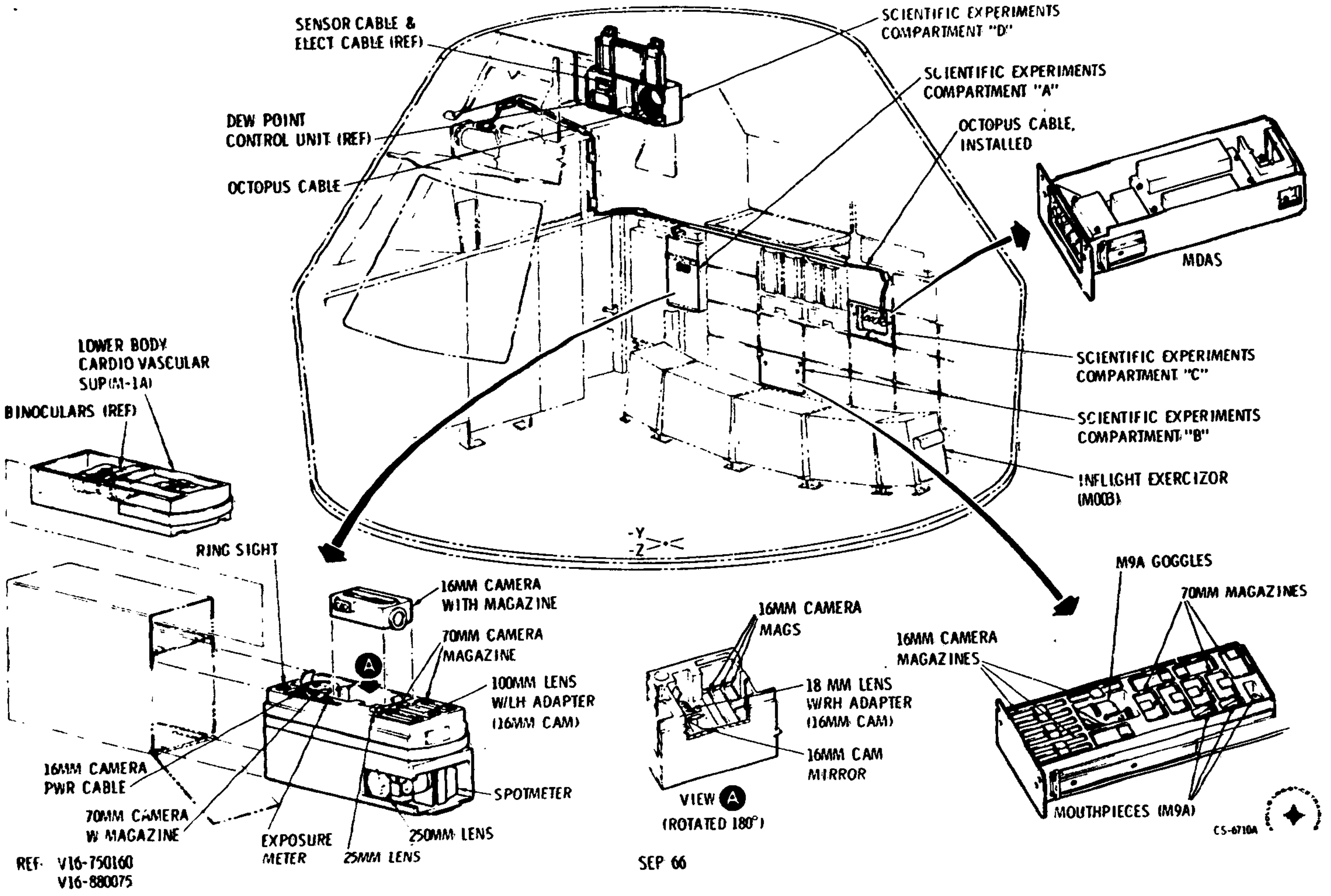

Figure 5-1. S/C 012 Mission Experiments Location, LEB (Sheet 1 of 2)

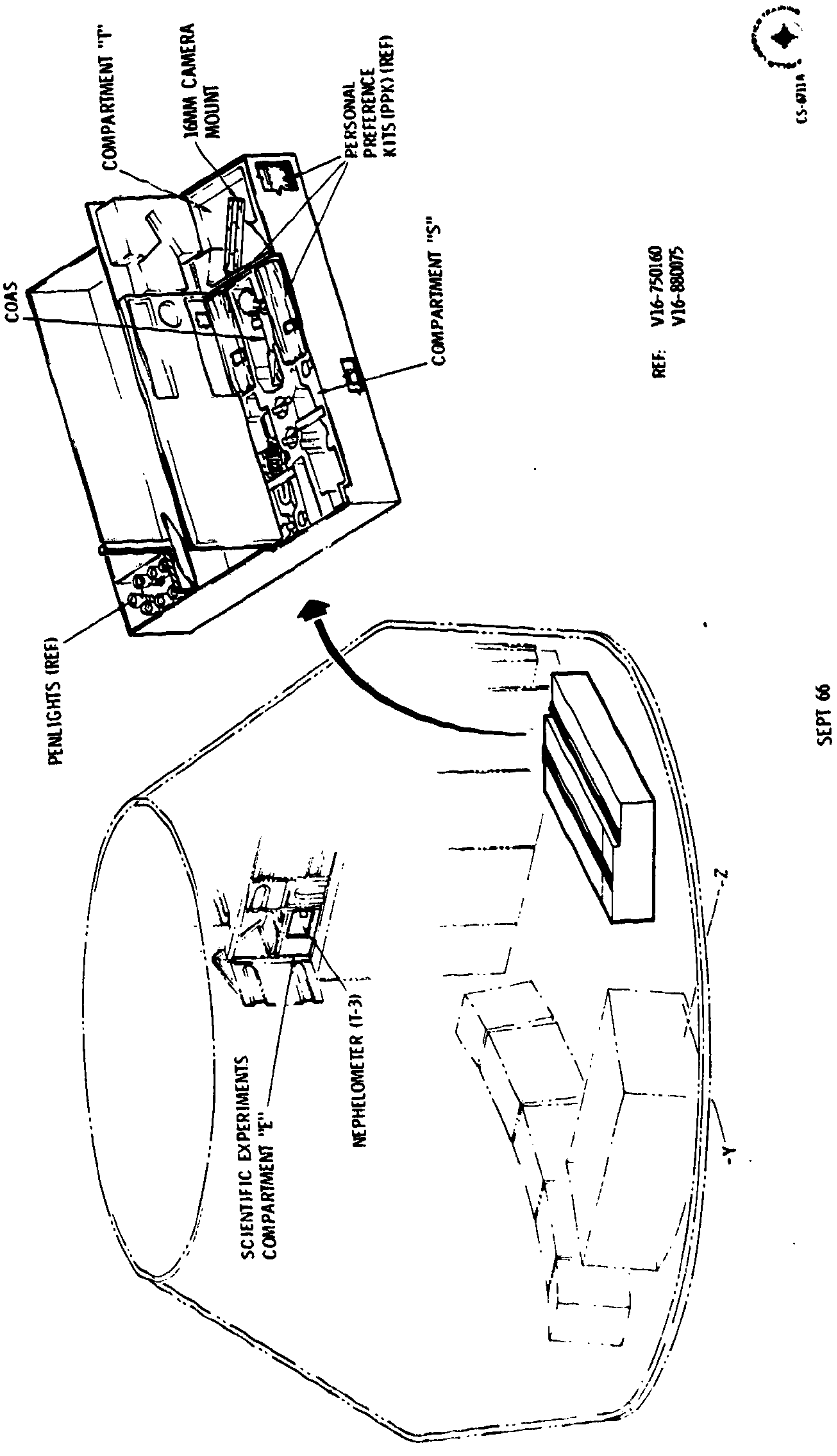

Figure 5-1. S/C 012 Mission Experiments Location, LEB (Sheet 2 of 2)

EXPERIMENTS AND SCIENTIFIC EQUIPMENT DATA

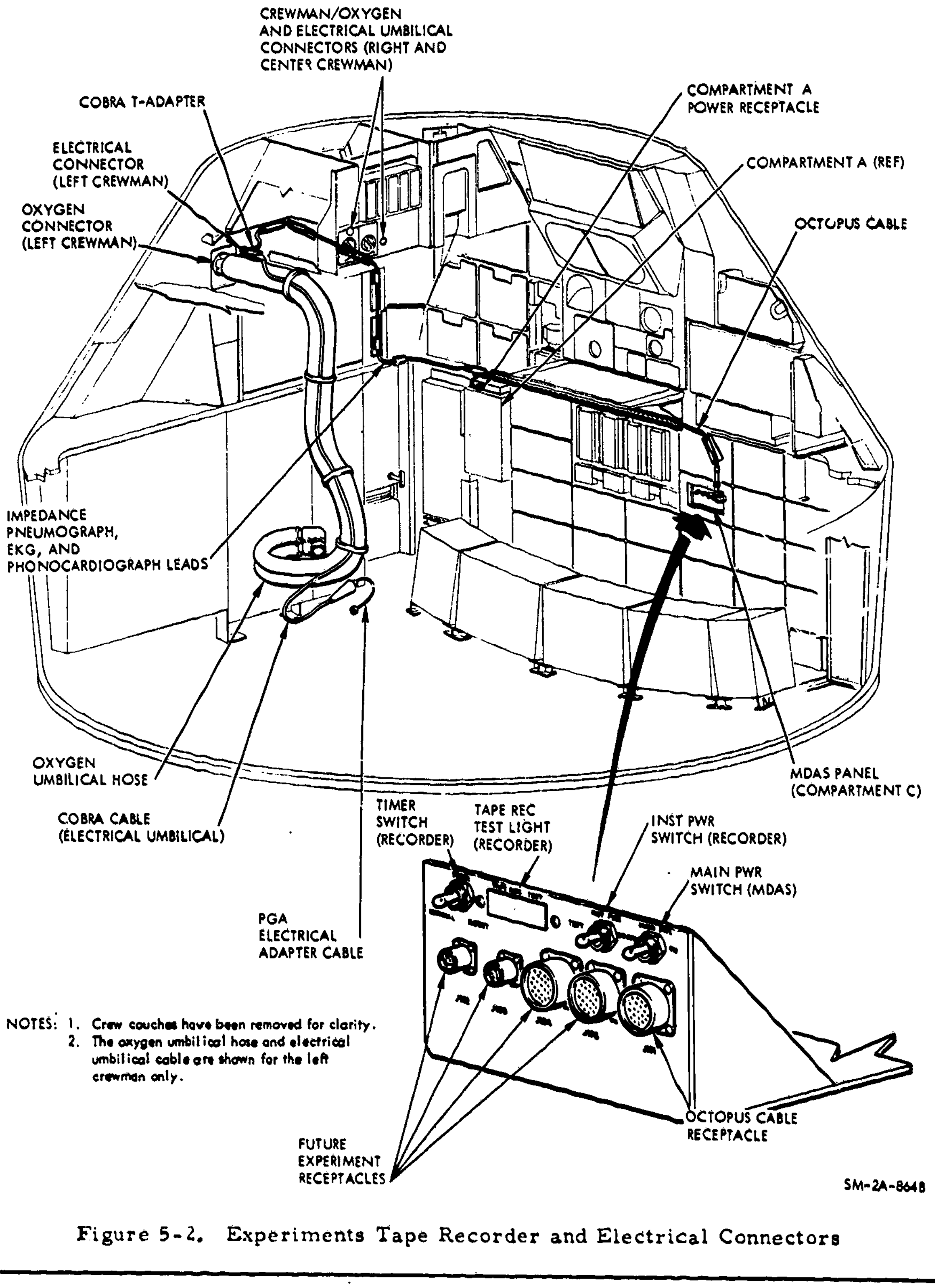

NOTES: 1. Crew couches have been removed for clarity.
2. The oxygen umbilical hose and electrical umbilical cable are shown for the left crewman only.

Figure 5-2. Experiments Tape Recorder and Electrical Connectors recorder. However, electrical outlets on the MDAS front panel are provided for additional or future experiments (via electrical cabling connected directly to the equipment and the MDAS). The MDAS front panel also contains a MAIN PWR switch for controlling power to the unit and unit outlets, an INSTR PWR switch for controlling power to the tape recorder and the recorder test light, and a TIMER switch for correlating mission elapsed time on the tape recorder.

All three crewmembers have the capability of being recorded for their physiological data when electrically connected to the tape recorder. However, only one crewman at a time will have his outputs recorded during flight. (See figure 5-3.) Total recording time for the tape recorder is 100 hours maximum with 880 feet of usable tape. There are seven channels available for collecting data (including the optional channel for recording code signals).

The MDAS tape recorder is removed from the spacecraft immediately after flight, placed in a GFE metal container for protection against strong magnetic fields, and transported to the NASA-MSC (where the magnetic tape is removed from the recorder).

5.1.2 ELECTRICAL CABLES AND ADAPTERS.

5.1.2.1 Octopus Cable.

The octopus cable (figure 5-2) plugs into the MDAS tape recorder, is protected from electrical arcing by an on-off power switch on the recorder panel, and contains signal and power lines for the following:

- Provides for 28-volt d-c (100 watts) power from compartment A to the MDAS in compartment C
- Provides for biomedical signals from a crewman (attired in the PGA or CWG) to the tape recorder. These signals consist of EKG, phonocardiograph, and impedance pneumograph outputs. This cable weighs 1.5 pounds and is stowed in compartment D of the LHFEB during launch and entry. The cable remains connected to the MDAS and a crewman's T-adapter during orbital flight.

5.1.2.2 Cobra Cable T-Adapter.

The T-adapter (figure 5-2), provided for each crewmember, weighs 1/2 pound and remains attached to the cobra cable at all times. This three-way electrical connector mates the cobra cable to the appropriate crewman electrical umbilical connector (panels 300, 301, or 302) and the octopus cable. A relay incorporated in the T-adapter is controlled by the TLM INPUTS-BIOMED (MDC-20) or the MDAS MAIN PWR switch in compartment C (providing the octopus cable lead is connected to the T-adapter). This relay permits electrical signals, from a crewman's torso, to be transmitted as operational data and recorded in-flight as experimental data.

EXPERIMENTS AND SCIENTIFIC EQUIPMENT DATA

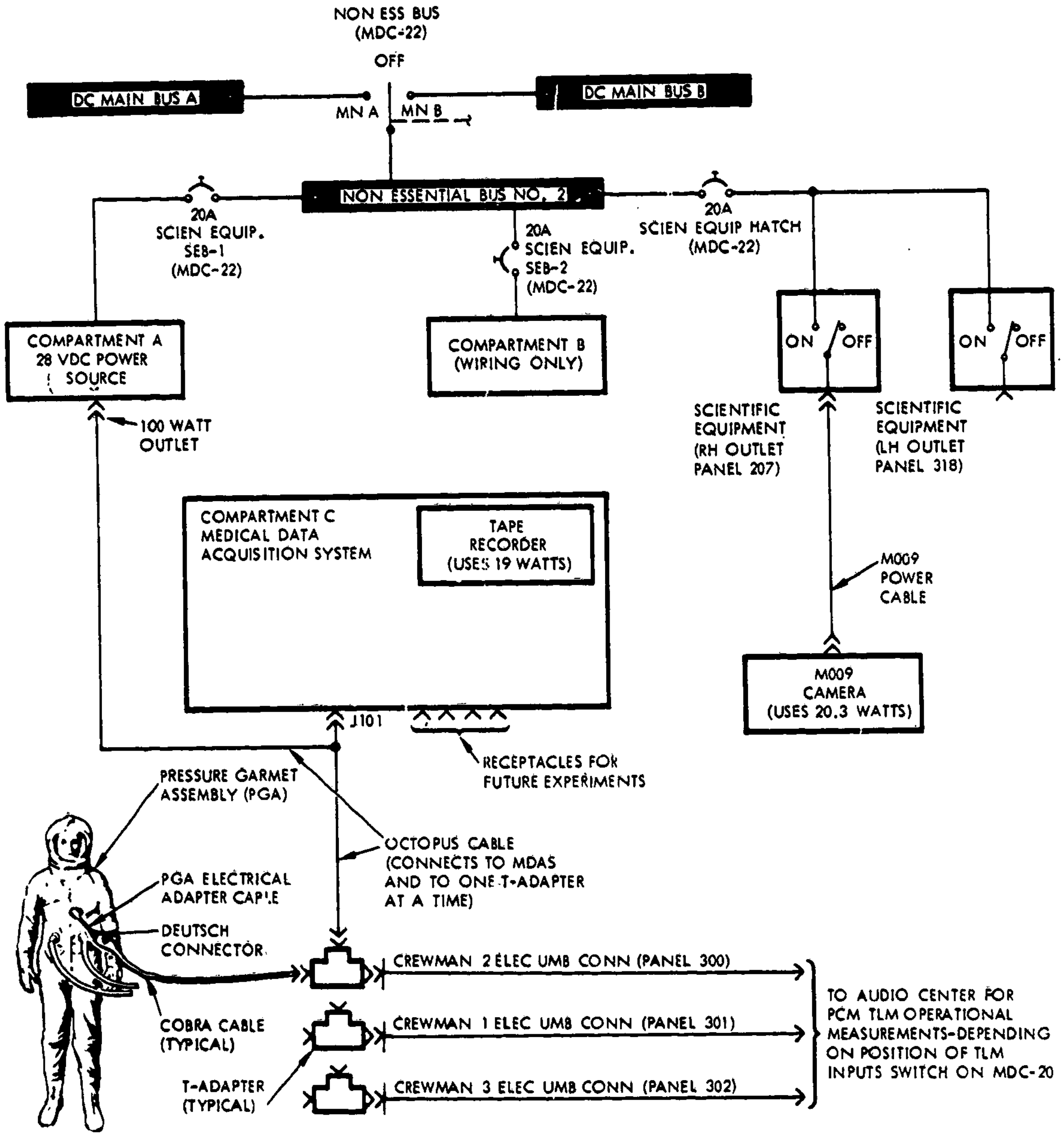

NOTES:

1. Signal conditioners, sensors, and associated wiring on a crewman's torso (attached to the Microdot connector inside the PGA or on the CWG) provide for PCM TLM operational measurements and scientific experiments data.
2. A T-adapter permits simultaneous transmission of operational measurements (selected for one crewman at a time) and the recording of in-flight experiments data. However, operational measurements can be transmitted from one crewman while another crewman is recording experiments data

SM-2A-902C

Figure 5-3. Scientific Equipment Power Distribution

Operational data from one crewman may also be transmitted while experimental data from another crewman is being taped on the MDAS. However, only one operational transmission and one experimental recording can be taken at the same time.

5.1.2.3 PGA and CWG Electrical Adapter Cables.

The PGA and CWG electrical adapter cables (crew personal equipment) are provided to connect the cobra cable to signal conditioners and communication equipment attached to a crewman's body. (See figure 5-3 and refer to section 6.)

5.1.2.4 Hardware Power and Signal Cables.

Hardware power and signal cables are used for connecting equipment electrically to various outlets in the crew compartment. (See figure 5-3.) Protection from electrical arcing is provided by switches on the equipment or on the outlet panels in the crew cabin. The M-9A camera power cable (figure 5-3) connects to the RH SCIENTIFIC EQUIPMENT outlet on panel 207. A SCIENTIFIC EQUIPMENT outlet on panel 318 (near the LH side window) is reserved for a future experiment but can also be used as a backup outlet for the camera cable. Outlets marked J102 through J105 on the MDAS are reserved for future experiments. (See figure 5-2.)

5.2 MEDICAL EXPERIMENTS.

5.2.1 IN-FLIGHT EXERCISER (M-3A) (M003).

The purpose of experiment M-3A is to collect crew data for determining benefits of exercise during space flight. Recumbency (bed rest) studies have shown that exercise work tolerance for an individual is greatly reduced after being relatively immobile and in a horizontal position for a few days. Zero gravity during space flight may further increase the length of a crewman's reconditioning period.

5.2.1.1 Equipment Description.

The exerciser for experiment M-3A (figure 5-4) weighs about 1-1/2 pounds and consists of two rubber elastic (bungee) cords with a retaining cable. A nylon elastic sleeve covers the bungee cords and retaining cable. One end of the exerciser contains a looped strap made of webbing cloth that can be secured around a crewman's feet. The other end of the exerciser has a spherical plastic handle grooved to fit both hands of a crewman. The retaining or safety cable within the elastic sleeve permits the exerciser to be stretched from 9-1/2 to 21-1/2 inches.

A mechanical interface between the equipment and the S/C exists where the exerciser container is attached to the CO_2 absorber container in the LEB (opposite the RH couch). Although all three couches can be used

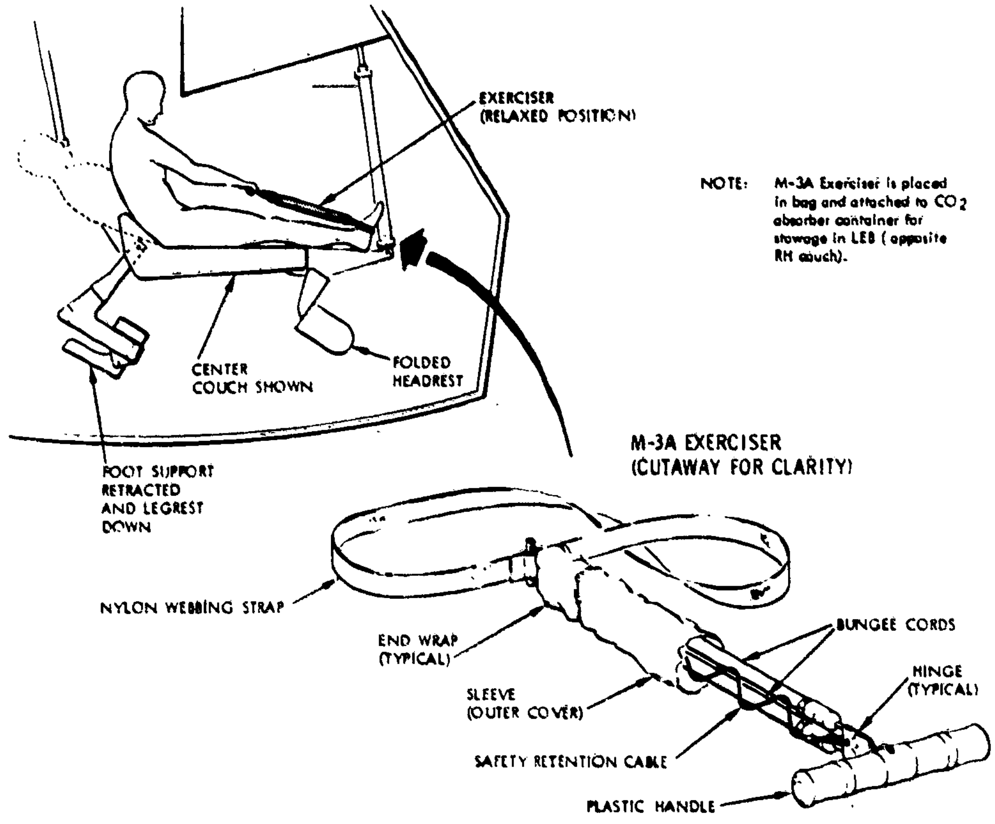

NOTE: M-3A Exerciser is placed in bag and attached to CO_2 absorber container for stowage in LEB (opposite RH couch).

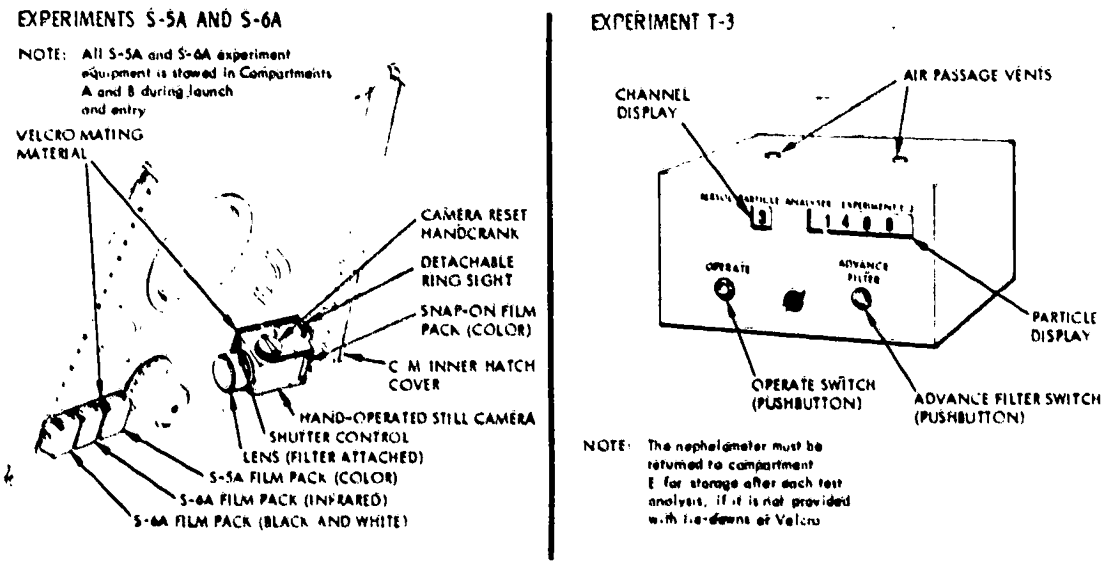

EXPERIMENTS S-5A AND S-6A

NOTE: All S-5A and S-6A experiment equipment is stowed in Compartments A and B during launch and entry

EXPERIMENT T-3

NOTE: The nephelometer must be returned to compartment E for storage after each test analysis, if it is not provided with tie-downs of Velcro

SM-2A-866A

Figure 5-4. Experiments Operational Arrangement (Sheet 1 of 2)

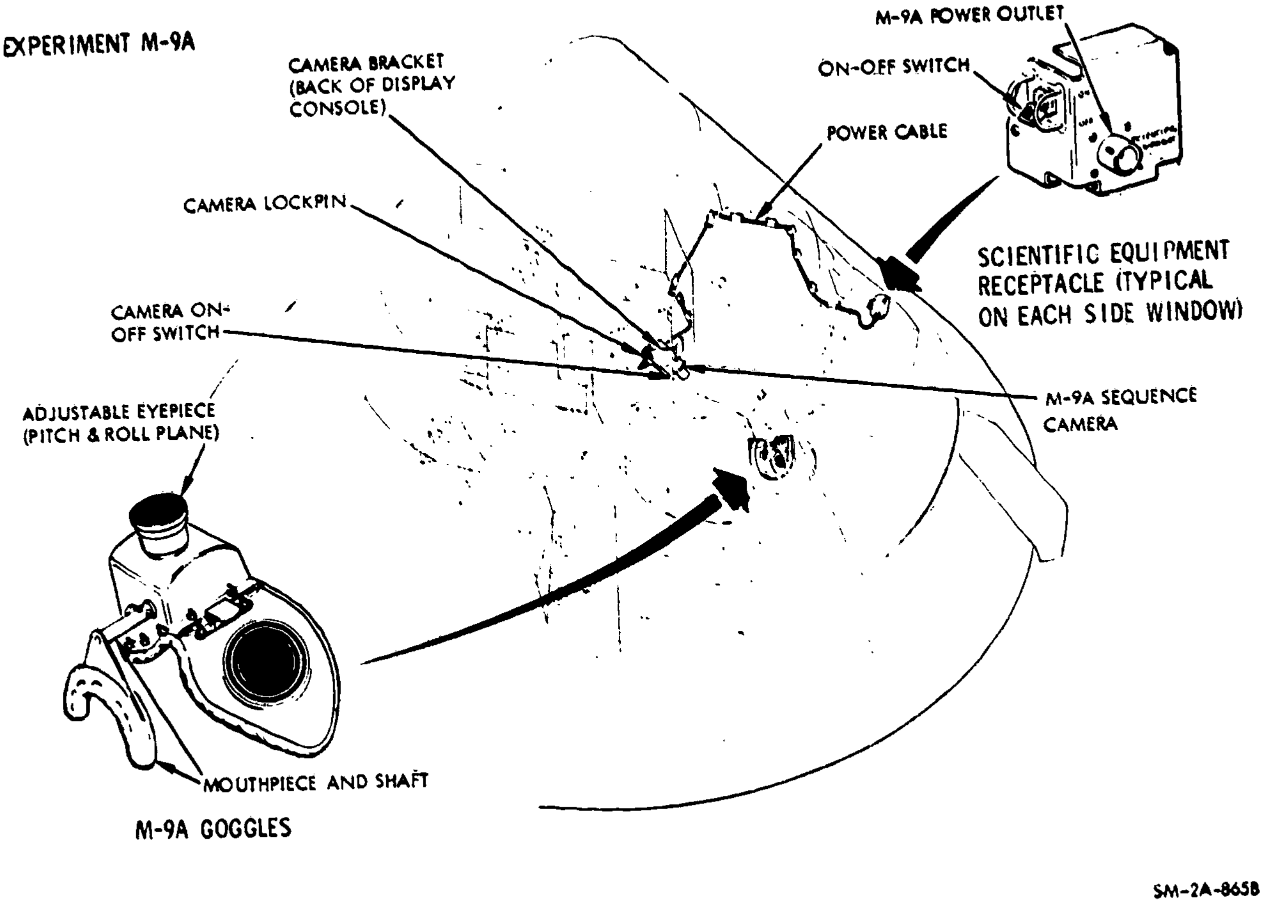

Figure 5-4. Experiments Operational Arrangement (Sheet 2 of 2)

during the M-3A isotonic and isometric exercises, only the center couch provides adequate head room to comfortably perform isotonic exercises when data recording periods are conducted. (Date includes EKG, impedance pneumograph, and phonocardiograph recordings taped on the MDAS recorder.)

5.2.1.2 Experiment Procedures.

All crewmen will exercise in-flight for 10 minutes three times every 24 hours. The base line preflight data will serve as a control for the study. A recording session is required once per day on one crewman before, during, and after an exercise period. Crewmembers will alternate each day for data recordings. (Detailed procedures are provided in section 11)

5.2.1.3 Crewman Participation.

Requirements for crewman participation in the exercise experiment are as follows:

a. Preflight - Each crewman will be tested for exercise tolerance (physical fitness level) on three separate occasions 8 to 4 weeks prior to flight.

b. In-flight - Each crewman will be required to exercise 3 times daily for 10 minutes each exercise period. Medical data from one crewman will be recorded during one exercise period each day. (It will take 3 days to obtain medical data from all three crewmen.)

c. Postflight - Each crewman will undergo re-evaluation exercises on three separate occasions (12 to 24 hours, 1 week, and 2 weeks after touchdown).

5.2.1.4 Recovery Requirements.

There are no special recovery requirements for experiment equipment because the in-flight exerciser will remain stowed in the S/C during recovery. An exerciser of equivalent design will be available at the site where postflight evaluations are performed and the experiment is completed. The on-site coordinators will be responsible for removal of the magnetic recording tape from the MDAS and delivery of all data to the NASA-MSC.

5.2.2 IN-FLIGHT PHONOCARDIOGRAM (M-4A) (M004).

The purpose of experiment M-4A is to obtain information on the functional cardiac status of two crewman during prolonged space flight. An in-flight recording of the phonocardiographic heart sounds, compared with the highest EKG signal, will be made to determine the delta time interval between electrical activation of the heart muscle (mycardium) and the onset of ventricular systole (heart contraction).

5.2.2.1 Equipment Description.

The equipment worn by the crew commander and navigator in experiment M-4A consists of two phonocardiogram transducers (microphone biosensors), a phonocardiograph signal conditioner package (amplifier) with variable gain, and associated electrical wiring. The biosensors are attached to the crewman's torso (skin) and connected by electrical leads to the signal conditioner (fastened on the CWG) and the Microdot connector on the PGA or CWG. Signal outputs from the crewman's body to the biomedical tape recorder (compartment C) are routed via the PGA or CWG adapter cable, the cobra cable, T-adapter, and the GFE octopus cable. (See figure 5-3 for tape recorder and electrical connectors, and refer to paragraph 5-1 for data on scientific equipment.)

The total S/C electrical power for recording the experiment is approximately 1.4 watts. The octopus cable, for connecting the tape recorder to the PGA, is stowed in compartment D of the LHFEB. (See figure 5-1.)

5.2.2.2 Experiment Procedures.

Installation of phonocardiogram transducers on the chest of the two crewmen and the positioning and hookup of electrical leads, worn outside the CWG, are performed during the preflight suiting procedure. After hookup during flight, recordings are taken on the medical data acquisition system (MDAS). Supporting data such as EKG and impedance pneumograph signals are also recorded during the experiment. (Detailed in-flight procedures are provided in section 11.)

5.2.2.3 Crewman Participation.

Requirements for crewman participation in the phonocardiogram experiment are as follows:

a. Preflight - Sensor application should not exceed one hour. Approximately 5 minutes of recording will be required for collecting baseline data from each crewman.

b. In-flight - No effort will be required by the crewman other than hookup to the MDAS. The one special exception could be time spent in determining optimum placement or repositioning of a microphone biosensor.

c. Postflight - Approximately 5 minutes will be required for post-recovery recording for data comparison

5.2.2.4 Recovery Requirements.

There are no special recovery requirements for the experiment other than removal of the magnetic recording tape from the MDAS. The recorded data will be processed by conventional methods

5.2.3 BONE DEMINERALIZATION (M-6A) (M006)

The purpose of experiment M-6A is to determine the effect of weightlessness and immobilization during space flight on the demineralization of certain bones within the body of each astronaut.

5.2.3.1 Equipment Description.

This experiment does not require any in-flight equipment, S/C power or fuel, or recording equipment. (There are no interface problems between experiment M-6A and the S/C.)

5.2.3.2 Experiment Procedures.

In-flight procedures are not required for this experiment. Prior to flight, crewmen will have X-rays taken of their heel bones and the last joint of the little finger on the right hand. These exposures will be taken before and after flight at Kennedy Space Center X-ray facilities. The hematopietic (i.e., blood forming marrow) areas will not be exposed to the radiation source since the exposure field will be carefully limited

5.2.3.3 Crewman Participation.

Requirements for crewman participation in the bone demineralization experiment are as follows:

a. Preflight - Approximately 45 minutes total time is required per crewman for obtaining X-ray films (three 15-minute sessions at T minus 10 days, T minus 2 days, and T minus 220 minutes).

b. In-flight - None

c. Postflight - Approximately 15 minutes per astronaut are required for obtaining X-ray films after spacecraft recovery. (A follow-on checkup may be required, depending on bone demineralization)

5.2.3.4 Recovery Requirements.

On-site investigators will develop X-ray films, make bone densitometry measurements, and be responsible for delivery of all data to the NASA-MSC.

5.2.4 HUMAN OTOLITH FUNCTION (VESTIBULAR EFFECTS) (M-9A) (M009).

The purpose of experiment M-9A is to determine the effect of prolonged weightlessness on a crewman's orientation sensation, particularly to the otolith organ (inner ear). All data collected will be used to predict the ability of space crews to orient themselves in a weightless environment, especially when subjected to darkness (eyes covered).

5.2.4.1 Equipment Description.

The equipment used for the experiment consists of the otolith test goggles (a mask with a single eyepiece or monocular scope), a mouthpiece for each crewman to align the goggles with his head, a 16 mm sequence camera (part of the operational equipment), film packs for recording the actual orientation of the subject's head relative to the S/C, and an electrical cable for providing 28-volt d-c power to the camera. (See figures 5-1 and 5-4.)

A bracket, stowed in compartment T on the aft bulkhead, is mounted behind the main display panel in the egress tunnel to secure the camera during the experiment. The experiment goggles and mouthpieces weigh about 5 pounds and are stowed with most of the film packs in compartment B of the LEB. Additional film packs and the power cable are kept in compartment A with the operational camera and lens. The 28-volt d-c power source for the camera is provided by an outlet near the crew cabin RH side window. (See figure 5-4.)

5.2.4.2 Experiment Procedures.

In preparation for the experiment, shades are installed over the windows and all cabin lights are turned on to maximum intensity The test subject (in the center couch) operates the camera, covers his eyes with the otolith test goggles, and manually adjusts a self-luminous target line in the monocular scope to what he thinks is straight ahead and parallel to the S/C Y-Y axes. A series of adjustments will be recorded by the camera (for each crewman) during flight and compared to test results obtained during preflight and postflight tests. (Detailed in-flight procedures are provided in section 11.)

5.2.4.3 Crewman Participation.

Requirements for crewman participation during the experiment are as follows:

a. Preflight - A total time of about 3 hours is required for familiarization and training, including collection of base line data (for all three crewmen).

b. In-flight - One test period of 15 minutes per day per crewman is required.

c. Postflight - Each crewman will be subjected to a 5-minute test period as soon as possible after S/C recovery (for a total time of about 15 minutes) to complete the experiment data.

5.2.4.4 Recovery Requirements.

Facilities in the primary recovery area will be used to complete the postflight examination and medical debriefing. The raw data consisting of film is recovered from the S/C along with the goggles and mouthpiece for delivery to the on-site coordinators.

5.2.5 CYTOGENETIC BLOOD STUDIES (M-11) (M011).

The purpose of experiment M-11 is to conduct preflight and postflight analyses to determine if space environment produces cellular changes in the blood of crewmen. These changes, which are important to the medical and scientific point of view, may not be apparent from routine monitoring procedures.

5.2.5.1 Equipment Description.

This experiment does not require any in-flight equipment, S/C power or fuel, or S/C recording equipment. (There is no interface between experiment M-11 and the S/C.)

5.2.5.2 Equipment Procedures.

On two occasions (preflight), approximately one month apart, blood specimens will be obtained from the crewmen for the experiment. The second occasion for drawing blood samples will be scheduled as close to lift-off time as conveniently possible. Blood samples for part A of the experiment (cytogenic studies of human hemic cells) and part B of the experiment (immunological system) will be drawn at a predetermined hospital site for analyses. Postflight requirements will be essentially the same, except that three such samples will be required over a period of one year. The first postflight blood sample will be drawn shortly after the termination of flight. (In-flight procedures are not required for this experiment.)

5.2.5.3 Crewman Participation.

Requirements for crewman participation in the M-11 experiment are as follows:

a. Preflight - On two occasions prior to flight (T minus 30 days and T minus one day), blood samples (10 cc for part A and 15 to 20 cc for part B of the experiment) will be drawn from each crewman.

b. In-flight - None

c. Postflight - On three occasions after S/C recovery, blood samples (10 cc for part A and 15 to 20 cc for part B of the experiment) will be drawn from the crewmen. It is not essential that blood samples for parts A and B are drawn at the same time.

5.2.5.4 Recovery Requirements.

After mission completion, blood samples must be drawn from the crewmen at a conveniently located, but predetermined, hospital for analyses. Blood determinations made should include immunoelectrophoresis, electrophoresis, electrophoresis on starch gel, measurement of gamma$_2$, gamma a, and gamma M globulin levels, measurement of whole hemolytic complement, titration of blood group antibodies, and measurement of pre-existent antibacterial antibodies.

5.2.6 CARDIOVASCULAR REFLEX CONDITIONING (M-48) (M048).

The purpose of experiment M-48 is to determine the effectiveness of a lower body vascular support garment for preventing physical fatigue, insufficient circulating blood volume to maintain adequate venous return (blood-pooling), and a loss of venomotor reflexes in the legs of a crewman during entry and recovery (when exposed to earth 1-g gravity force).

5.2.6.1 Equipment Description.

The equipment used in experiment M-48 consists of an 8-ounce pair of waist-length tights for supporting veins in the lower portion of a crewman's body. These tights are composed of rubber strands wrapped with cotton and woven into a garment with dacron. When worn, the tights will extend from the crewman's waist to his heel and supply a decreasing pressure from the waist down. The M-48 equipment does not require any S/C electrical power, fuel for attitude maneuvers, or recording equipment. When not in use, the experiment tights are stowed in compartment A of the LEB.

5.2.6.2 Experiment Procedures.

The M-48 vascular support tights are donned by a crewman prior to entry and just before getting into the pressure garment assembly (PGA). This crewmember also wears a two-piece constant wear garment (CWG) to facilitate getting into the tights and replacing the CWG. (Detailed in-flight procedures are provided in section 11.)

5.2.6.3 Crewman Participation.

Requirements for crewman participation in the conditioning experiment are as follows:

a. Preflight - Each crewmember will be given a minimum of three tilt-table checkouts for control data (requiring about 90 minutes per crewman). These checkouts, performed by qualified flight surgeons or experiment medical team, will be conducted within 4 weeks of launch date.

b. In-flight - The in-flight portion of the experiment will consist of one crewmember donning the vascular support garment 1 to 2 hours prior to entry and wearing it until the first postflight tilt-table checkout. A total time of about 3 minutes will be required for in-flight experiment preparations.

c. Postflight - After recovery, a series of tilt-table tests will be given to both the control subjects and the experiment subject. The control subjects will be tested 2 to 4, 8 to 12, 24, and 48 hours after recovery. The experiment subject, wearing the vascular support garment, will be initially tested 2 to 4 hours after recovery. Twenty minutes after his first tilt-table test, the experiment subject will be given a second test without the support garment. The remaining tests will follow the same sequence as described for the control subjects.

> **NOTE** Tilt-table checkouts for the experiment consist of a 5-minute supine tilt, a 15-minute vertical (70-degree head-up position) tilt, and a 5-minute supine recovery tilt. During each tilt phase, performed on a manual tilt table with a saddle support, the crewmember's blood pressure and heart rate will be automatically recorded each minute. Also, changes in the leg blood volume will be measured each minute during the 70-degree and supine recovery tilts.

- Additional data required to complete the experiment such as plasma volume, total blood volume, and red blood cell mass will be obtained during preflight and postflight hematology tests by the experiment medical team.

5.2.6.4 Recovery Requirements.

Tilt table, heart rate, blood pressure, and other medical support equipment for the experiment are required in the recovery area for collection of postflight data (gathered and processed by the experiment medical team).

5.3 SCIENTIFIC EXPERIMENTS.

5.3.1 SYNOPTIC TERRAIN PHOTOGRAPH (S-5A) (S005).

The purpose of experiment S-5A is to obtain photographs of selected areas of the earth from the S/C at orbital altitude. These photographs are required for research in geology, geophysics, geographys, oceanography, and for use in planning photography from a manned orbiting laboratory.

5.3.1.1 Equipment Description

The equipment used in experiment S-5A (figure 5-4) weighs about 5 pounds and consists of a hand-operated Hasselblad 70-mm general purpose camera (single frame) with a detachable ring sight, two color-film packs (55 exposures each), and an exposure dial and spotmeter (operational equipment used with the Hasselblad camera). Except for the film packs in compartments A and B, most of the camera equipment is stowed in compartment A. (See figure 5-1.) This equipment can be retrieved and set up for photography in about 5 minutes.

No special interface problems are anticipated for this experiment. When not in use, the camera may be temporarily secured to the inner hatch cover, or anywhere within the C/M where Velcro mating material is provided.

5.3.1.2 Experiment Procedures.

This experiment will consist of photographing certain areas and features along the S/C flight path. The desired camera angle for taking pictures (with S/C window in shade) will be 90 degrees from S/C level flight over the earth. The crewman will be required to record the time of each photograph, subject, frame number, and film pack number in the experiments log book. (Detailed in-flight procedures are provided in section 11.)

5.3.1.3 Crewman Participation.

Requirements for crewman participation in experiment S-5A (time shared with experiment S-6A) are as follows:

a. Preflight - The crewman-subjects will be provided with a briefing (1 to 3 hours) on the aims, methods, and procedures for in-flight photography of selected terrestrial areas.

b. In-flight - About 45 minutes (total time) will be devoted to photography during 9:00 AM to 3:00 PM local time conditions.

c. Postflight - About one hour will be required for debriefing.

5.3.1.4 Recovery Requirements.

There are no recovery requirements other than removal of the camera and film from the S/C. Personnel performing the postflight debriefing will be responsible for delivering the exposed film to the coordinating facility for processing, analysis, and evaluation.

5.3.2 SYNOPTIC WEATHER PHOTOGRAPHY (S-6A) (S006).

The purpose of experiment S-6A is to obtain selective, high-quality photographs of cloud patterns taken from the spacecraft at orbital altitude. These photographs will be used for studies of weather system structures around the earth.

5.3.2.1 Equipment Description.

The basic equipment used in experiment S-6A (figure 5-4) is the same as that used in experiment S-5A. In addition to the 70-mm general purpose camera and ring sight, the S-6A equipment includes an ultraviolet filter, one color-film pack, and one color-shifted infrared film pack. Except for the film packs in compartments A and B, most of the camera equipment is stowed in compartment A.

No special interface problems are anticipated for this experiment. When not in use, the camera may be temporarily secured to the inner hatch cover or anywhere within the C/M where Velcro mating material is provided.

5.3.2.2 Experiment Procedures.

This experiment will consist of photographing certain weather areas and cloud formations of special interest along the S/C flight path. (Detailed in-flight procedures are provided in section 11.)

5.3.2.3 Crewman Participation.

Requirements for crewman participation (time shared with experiment S-5A) in experiment S-6A are as follows:

a. Preflight - The crewman-subjects will be provided with a briefing (1 to 3 hours) on the aims, methods, and procedures for in-flight photographing of selected cloud formations.

b. In-flight - As required during 9:00 AM to 3:00 PM local time conditions (about 45 minutes total time will be devoted to photography).

c. Postflight - About one hour will be required for debriefing.

5.3.2.4 Recovery Requirements.

There are no recovery requirements other than removal of the camera and film from the S/C. Personnel performing the postflight debriefing will be responsible for delivering the exposed film to the coordinating facility for processing, analysis, and evaluation.

5.4 TECHNICAL EXPERIMENTS.

5.4.1 IN-FLIGHT NEPHELOMETER (T-3) (T003).

The purpose of experiment T-3 (figure 5-4) is to determine and obtain a quantitative evaluation of the size, concentration, and distribution of particles present in the C/M crew compartment. In-flight measurements will be made of particles in the 0.3 to 10 micron size.

5.4.1.1 Equipment Description.

The nephelometer is a portable, self-contained instrument approximately 7.2 by 3.5 by 5.2 inches in size, weighs about 5.5 pounds, contains its own battery power supply, electronics, air pump, and presents a readout display (five channels for particle sizes in five discrete ranges). This equipment provides a collimated light beam that is focused at a point in a moving path of grossly filtered air. The cabin atmosphere, when being evaluated for aerosol particles, is drawn through the particle size detector by the air pump within the analyzer.

There are no interface problems anticipated for this experiment. When not in use, the nephelometer is stowed in compartment E of the LEB. (See figure 5-1.)

5.4.1.2 Experiment Procedures.

Experiment T-3 requires that the nephelometer be initially positioned in a preselected area within the crew compartment for evaluating particles present in the cabin atmosphere. The concentration of aerosol per unit volumes will be determined in each of five ranges (0.3 to 0.6, 0 6 to 1.2, 1.2 to 2.4, 2.4 to 4.8, and above microns). Data will be recorded after each 2-minute test run has been conducted, once every 6 hours. Several different locations may be used for taking particle measurements after the first 2 days of flight. (Detailed in-flight procedures are provided in section 11.)

NOTE To ensure accurate determinations, do not use analyzer if visible particles are floating in cabin; if temperature is above 90°F; or if relative humidity in cabin is over 70 percent.

5.4.1.3 Crewman Participation.

Requirements for crewman participation in experiment T-3 are as follows:

a. Preflight - The crewman-subjects will be provided with sufficient time for equipment familiarization and training.

b. In-flight - Experiment measurements will be conducted once every 6 hours (for a 2-minute test run) until the nephelometer integral battery power is depleted. (The total duration of the experiment is limited by a battery with a 3-hour lifetime.)

c. Postflight - About one hour will be required for debriefing.

5.4.1.4 Recovery Requirements.

The recovery requirements will consist of removing the nephelometer and recorded data from the S/C. Personnel performing the postflight debriefing will be responsible for delivering data to the coordinating facility for analysis and evaluation.

SECTION 6

CREW PERSONAL EQUIPMENT

INTRODUCTION.

This section contains a description of Contractor-furnished crew personal equipment and spacecraft interface data on NASA-furnished crew personal equipment. All major items are identified as Contractor-furnished equipment (CFE), Government-furnished equipment (GFE), or Government-furnished property (GFP).

The following is a list of equipment or subsystems for which coverage is provided.

- Crew Compartment Configuration
- Sighting Systems (GFE)
- Space Suit Assembly (GFP)
  1. Constant Wear Garment (GFP)
     (a) Communication Hat (GFP)
  2. Pressure Garment Assembly (GFP)
- Crew Couches (CFE)
- Restraint Methods (CFE)
- In-flight Data Package (GFE)
- Crewman In-flight Tool Set and Work/Food Shlf (CFE)
- Crew Water (CFE)
- Food (GFP)
- Personal Hygiene (GFP)
- Medical Supplies and Monitoring (GFP)
- Survival Kit (GFP)
- Stowage

6.1 CREW COMPARTMENT CONFIGURATION AND CREW ENVIRONMENT.

The crew compartment is the pressurized compartment within the airtight inner structure (figure 6-1). The total volume within the inner structure is 366 cubic feet. Approximately 121 cubic feet of this pressurized space is occupied by the equipment bays, and control and display consoles surrounding the crew. The couches, astronauts, aft bulkhead equipment, and miscellaneous equipment occupy another 35 cubic feet making a total of 156 cubic feet. There is approximately 210 cubic feet of usable air space. The crew compartment is pressurized to 5±0.2 psi, with 100 percent oxygen atmosphere and approximately 50 percent humidity.

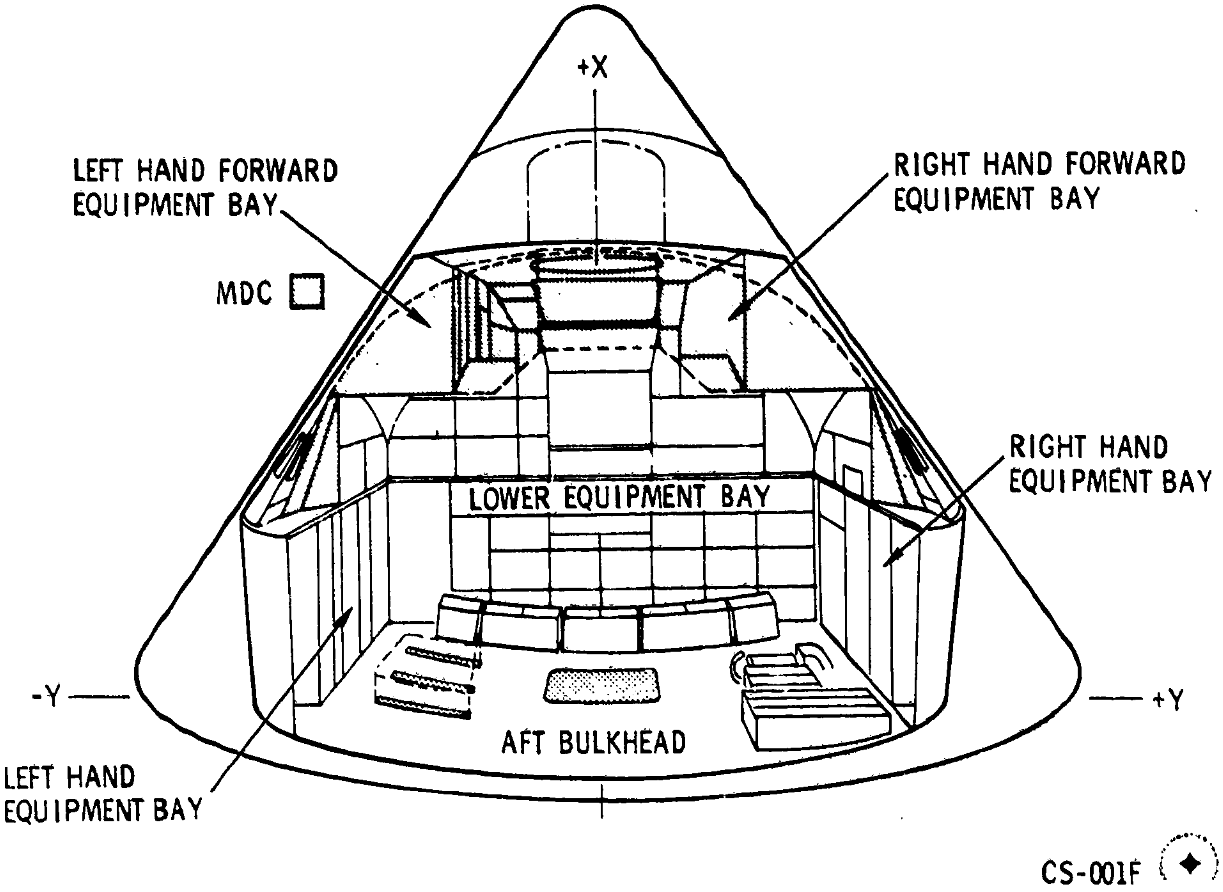

Figure 6-1. Apollo Crew Compartment, Internal View Form -Z-Axis

6.2 MIRRORS.

6.2.1 INTERNAL VIEWING MIRRORS (CFE). (Figure 6-2)

When the astronaut is in the pressure suit, pressurized, and on the couch, his field of vision is very limited. He can see only to the lower edge of the main display console (MDC), thus blanking out his stomach area where his restraint harness buckling and adjustment takes place. The internal viewing mirrors aid the astronaut in buckling and adjustment of the restraint harness and locating couch controls.

There are three mirrors, one for each couch position. The mirrors for the left and right astronaut are mounted on the side of the lighting and audio control console above the side viewing window and fold. The center astronaut's mirror is mounted on the left X-X head attenuator strut.

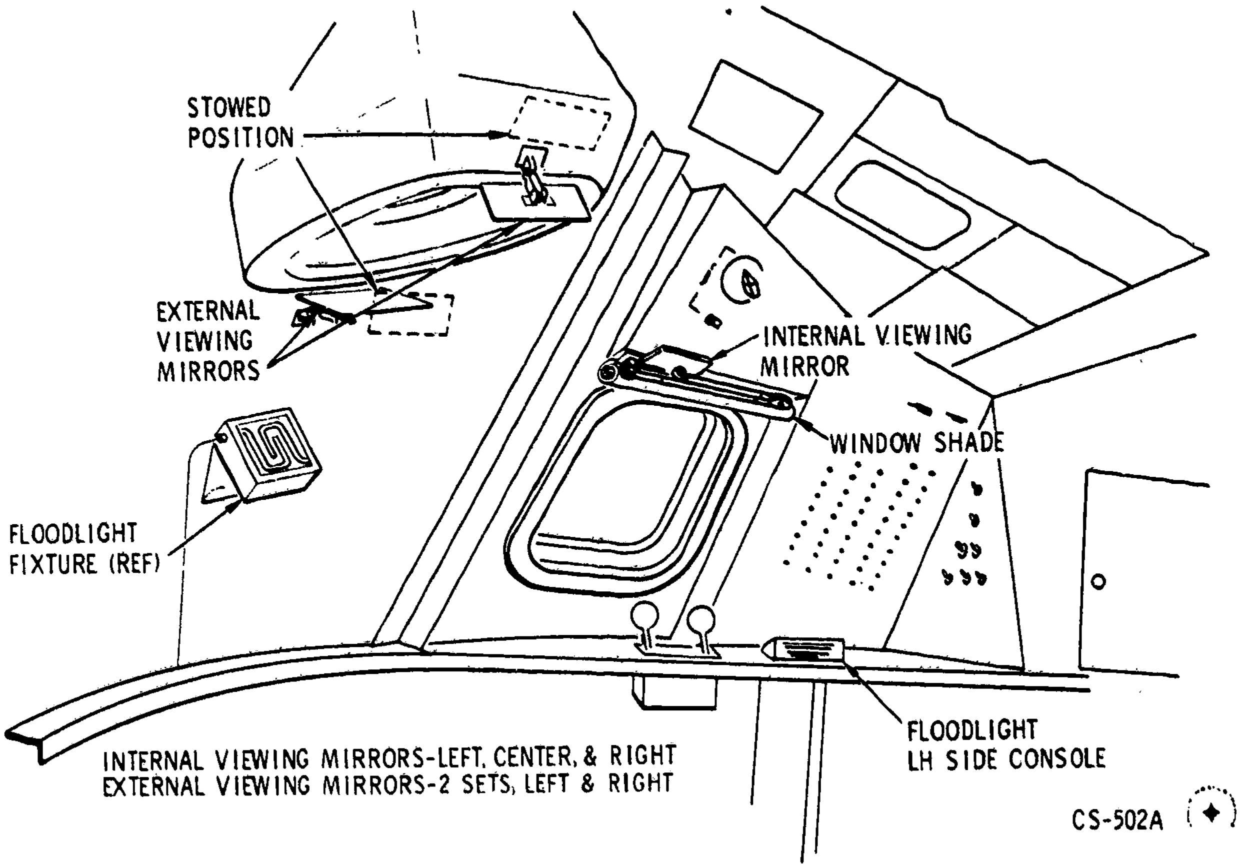

Figure 6-2. CM Mirrors, Block I and II

The mirror assembly consists of a mounting base, a two-segmented arm, and a mirror. The mirror is rectangular (4 by 6 inches), flat, rear surfaced, with a demagnification factor of 1:1. The two-segmented arm allows a reach of approximately 22 inches from the mount. The ends of the arm have swivel joints to position the mirrors in the desired angles. The mirrors are locked in position by a clamp during boost and entry.

6.2.2 EXTERNAL VIEWING MIRRORS (CFE). (Figure 6-2)

With the couches in the 96-degree position, the astronaut's left and right view, through the rendezvous windows, is restricted to +5 degrees to +42 degrees from the X-axis. Therefore, two sets of external viewing mirrors are installed in the CM to permit verification of parachute deployment during entry (figure 6-3). Another function is orientation of the command module in the event of an abort.

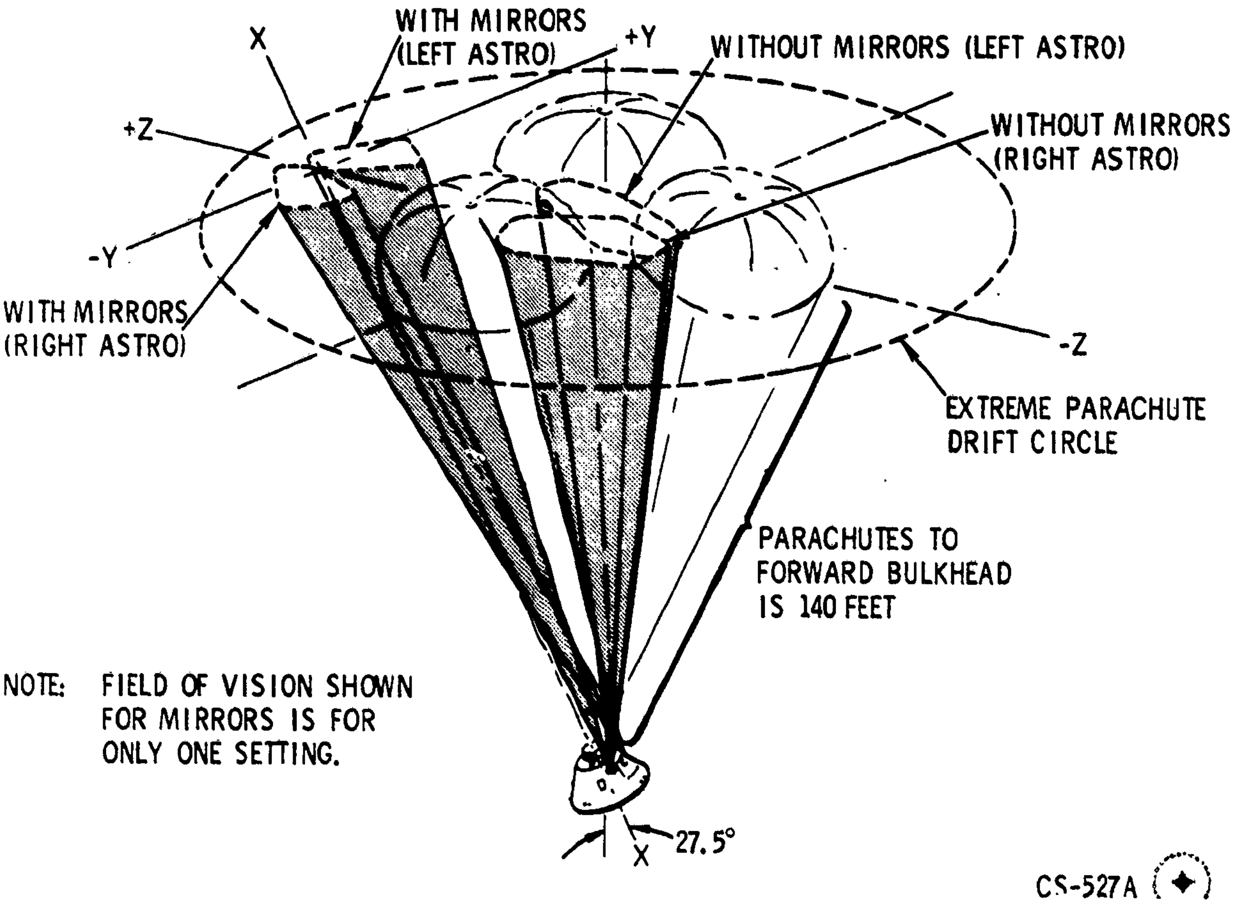

NOTE: FIELD OF VISION SHOWN FOR MIRRORS IS FOR ONLY ONE SETTING.

Figure 6-3. Parachute Field of Vision in Couch 96-Degree Position

A set of mirrors consist of an upper mirror assembly and a lower mirror assembly. The upper mirror assembly is mounted on the side wall near the upper rim on the rendezvous window frame. The lower mirror assembly is mounted on the rendezvous window housing near the lower rim of the window frame.

The mirror assembly consists of a mirror and a bracket. The bracket has a short arm with a swivel that allows positioning of the mirror. The short arm has a lock to immobilize the mirror during landing. The mirrors will have a 1:1 magnification factor and are rectangular in shape.

6.3 CREWMAN OPTICAL ALIGNMENT SIGHT (COAS). (Figure 6-4)

The crewman optical alignment sight provides the crewman a fixed line-of-sight attitude reference image which, when viewed through the forward window, appears to be the same distance away as the target. This image is foresighted (by means of a sight mount) parallel to the centerline (X-axis) of the CM and perpendicular to the Y-Z plane.

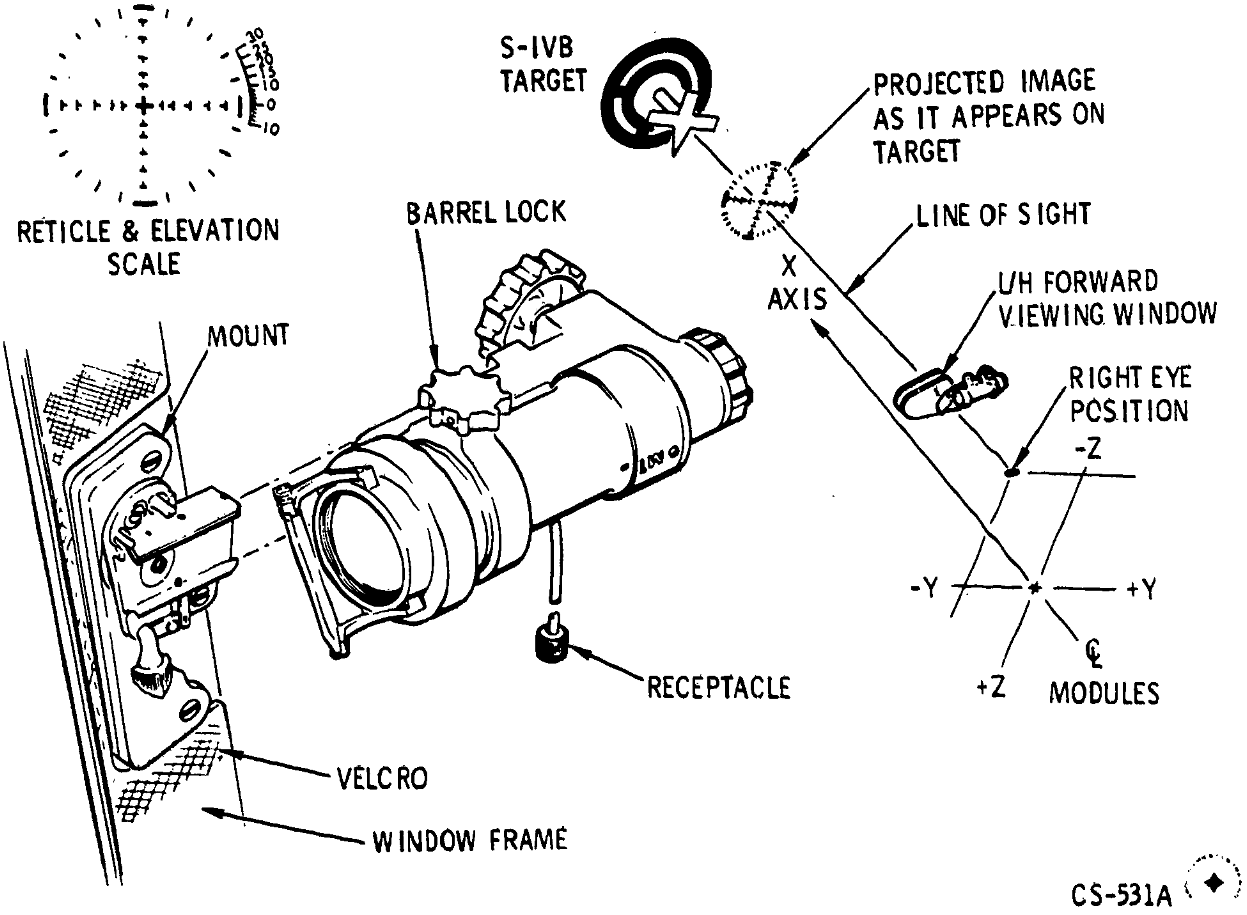

Figure 6-4. Apollo Crewman Alignment Sight System Configuration

The sight is a collimator device, similar to a gunsight. It weighs approximately 1.5 pounds and is 8 inches in length. It has a cord and receptacle and requires a 28-vdc power source. The sight is stowed in compartment T during boost and entry. When operationally required, it is mounted at the left rendezvous window frame. The power receptacle is connected to the SCIENTIFIC EXPERIMENTS receptacle (on the girth shelf).

6.3.1 OPERATIONAL USE.

When photographing activities or scenes outside the spacecraft with the 16 mm sequence camera, the COAS is used to orient the spacecraft and aim the camera. The camera will be mounted on the left sidewall handhold at a 90-degree angle to the X-axis and will be shooting out the left rendezvous window via a mirror assembly.

During rendezvous maneuvers with the S-IVB, the COAS can be used for alignment.

When the TV camera is mounted on the girth shelf for shooting out the right rendezvous window parallel to the X-axis, the COAS will be used for alignment. The COAS can also be used for backup for re-entry alignment and manual thrust vector control.

6.4 SPACE SUIT ASSEMBLY (GFP).

The space suit assembly (SSA) provides crewmembers with protective clothing and atmosphere for spacecraft command module environment. The assembly consists of a constant wear garment (CWG) and pressure garment assembly (PGA). For operational purposes, additional equipment is needed, such as communications and oxygen hoses. The equipment will be described in the two suit conditions: OFF and ON.

6.4.1 SPACE SUIT OFF OR SHIRTSLEEVE ENVIRONMENT.

During earth orbit, normal conditions (nondynamic) will allow the astronauts to remove the pressure garment assembly. The astronauts will wear an undergarment called the constant wear garment (CWG), a part of the space suit assembly. For communications, they will don a personal communications soft hat, connect it to a CWG adapter, and connect the adapter to an electrical umbilical which connects to the audio center.

6.4.1.1 Constant Wear Garment (CWG) (GFP).

The CWG (figure 6-5) is a one-piece, synthetic fabric garment for oxygen compatibility. It will be long sleeved or short sleeved. The short sleeve CWG has sleeve stiffeners. There are also pockets to hold radiation dosimeters. Around the mid-section are pockets for biomed preamplifiers. There are one or two cloth tabs (1 inch) near the chest to attach the cobra cable clip. An opening at the crotch is for urination and the rear opening is for defecation. A zipper up the chest allows easy donning and doffing.

The CWG can be worn for 6 to 7 days; therefore, a change will be needed. Each astronaut will wear a CWG under the pressure garment assembly. Three CWG's will be stowed in the left-hand equipment bay compartment CONSTANT WEAR GARMENT SANDALS. In the same compartment, three flight coveralls, one for each astronaut and three pair of weightless sandals, will be stowed.

6.4.1.2 Flight Coveralls (GFP).

Three flight coveralls will be stowed in the CHEB compartment, marked "CONSTANT WEAR GARMENT," for use while in shirtsleeve environment. The coveralls will be worn over the CWG, and will aid in keeping the CWG clean and the crewman warm.

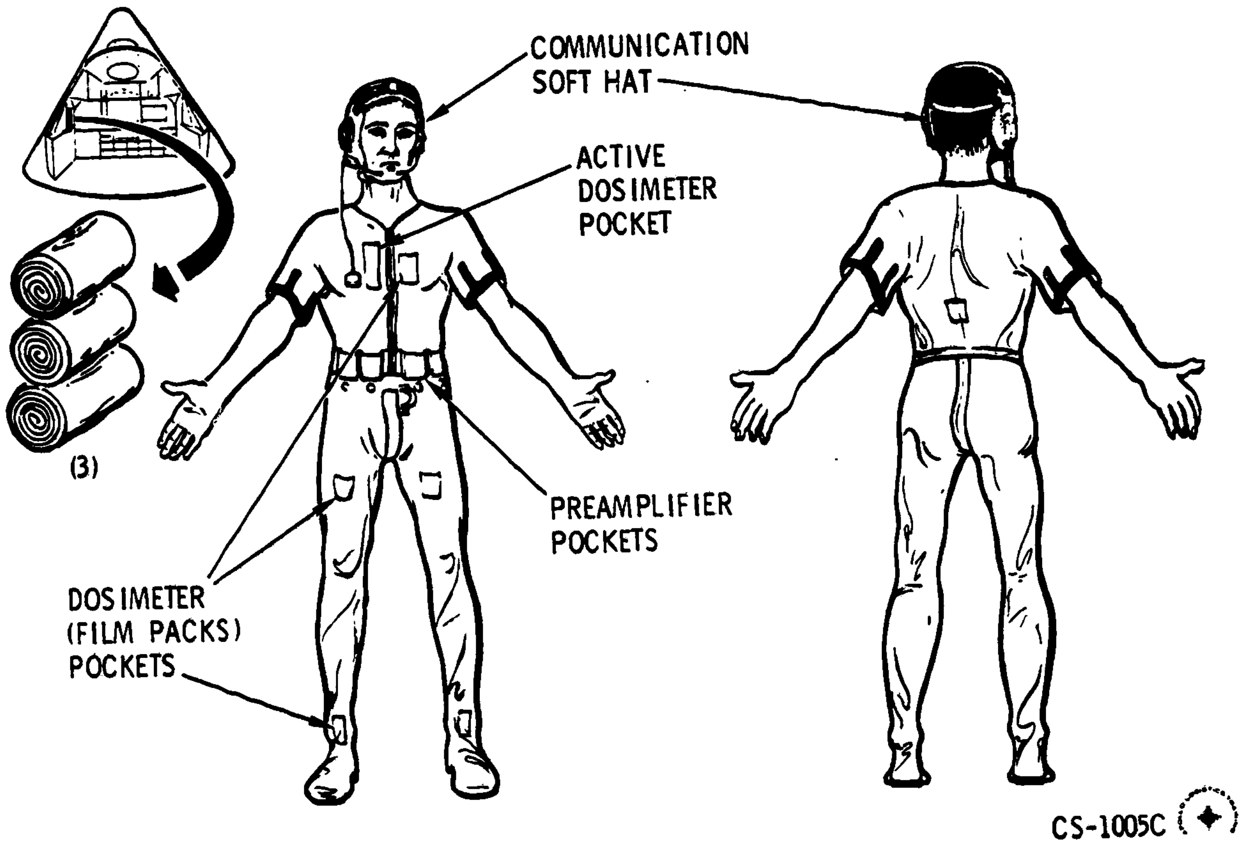

Figure 6-5. Constant Wear Garment (CWG)

6.4.1.3 Communications Soft Hat (GFP).

The personal communications carrier is a soft hat which supports communications equipment: redundant microphone/earphone sets and a connection to the audio center.

The microphones (voice tubes) have two positions: using and stowed. The stowed position is butted toward the forward edge of the helmet. The using position is in front of the mouth. Only one microphone needs to be used. The earphones will be in place over both ears all the time.

Three communications carriers will be stowed at launch and entry in the PGA helmet stowage bags on the aft bulkhead.

Three Lightweight Headsets will be evaluated during the mission and will share the soft hat stowage in the PGA helmet stowage bags.

6.4.1.4 Constant Wear Garment Electrical Adapter (CFE).

The function of the CWG adapter (figure 6-6) is to transmit the communications hat signals and the biomedical harness signals to the electrical umbilical or cobra cable.

The CWG adapter is a 37-pin connector which connects to the 21-socket connector from the communications soft hat. The nine-pin connector mates with the nine-socket connector of the biomedical harness connector.

Three CWG adapters will be required if all astronauts go shirtsleeve simultaneously. The three adapters will be stowed in the RHEB in a compartment marked ELECTRICAL ADAPTERS. The CWG adapter will time-share the compartment with three PGA adapters.

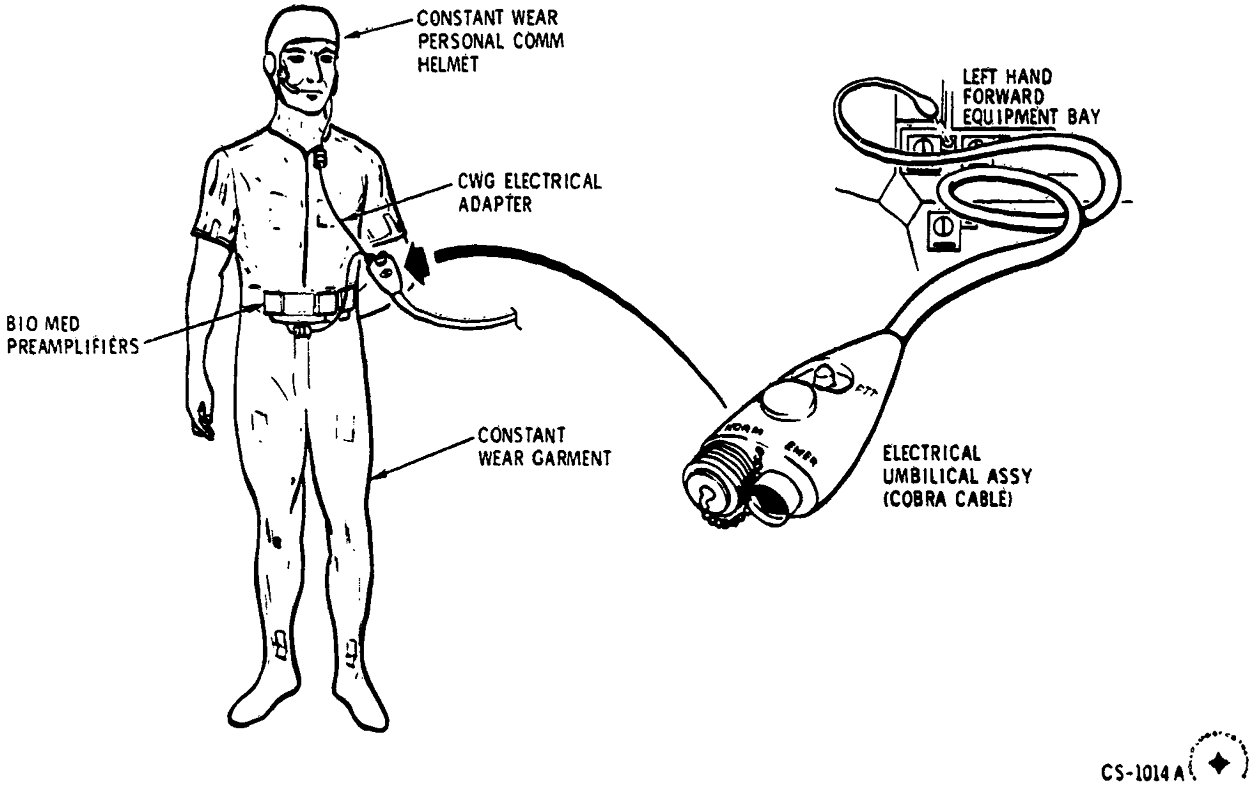

Figure 6-6. Personal Communications Equipment Connection, Block I (CWG)

6.4.1.5 Electrical Umbilical "Sleep" Adapter.

Two electrical umbilical "sleep" adapters will be stowed in the RHEB compartment marked ELECTRICAL ADAPTERS. The purpose of the "sleep" adapters is to eliminate voice communication signals passing through the caution/warning system, thus enabling uninterrupted sleep for two crewmen. The adapter, connected between the cobra cable and the CWG or PGA adapter, will play a pianissimo version of "Brahms Lullaby."

6.4.2 SPACE SUIT ON ENVIRONMENT.

6.4.2.1 PGA Unpressurized or Ventilated.

During launch, boost, entry, descent, and landing phases of the mission, the crew will be required to be suited. The crew will be fully suited but in the unpressurized or ventilated condition. That is, the cabin pressure will be 5 psi and the differential pressure of the suit will be a plus 2 inches of water or 0.072 psi. This is enough differential pressure to hold the suit comfortably away from the body. The oxygen will be flowing from the ECS suit loop, through the oxygen hose into the suit and returning through the return hose to the ECS suit loop. The cabin air is circulated about the cabin by the cabin air fans 1 and 2.

An alternate mode of ventilated usage is with helmet and gloves off, using neck and wrist dams. The gas circulation is the same, except the astronaut breathes cabin oxygen. This mode can only be sustained for 54 man-minutes out of 18 hours (1:20) because the cabin oxygen becomes saturated with water vapor which will condense on the structure. This is not a recommended mode.

6.4.2.2 PGA Pressurized.

The PGA (space suit) will not be pressurized except during an emergency. This condition will exist during a cabin depressurization. If out of the suit, the ECS can maintain 3.5 psi in the cabin for 5 minutes if the hole or leak is less than 1/2 inch in diameter. Therefore, donning the suit must take less than 5 minutes. When the suit is pressurized, the differential pressure will be a plus 3.7 psi in the suit. This condition constrains the body mobility. For this reason, it is normally not desired to be pressurized.

The crew will perform a cabin depressurization to demonstrate confidence in the spacesuit and proper function of the hardware.

6.4.3 PGA DESCRIPTION. (Figure 6-7)

6.4.3.1 PGA Components.

The PGA is a three-piece suit: torso, helmet, and gloves. It is manufactured by Clark Manufacturing Co. of Massachusetts.

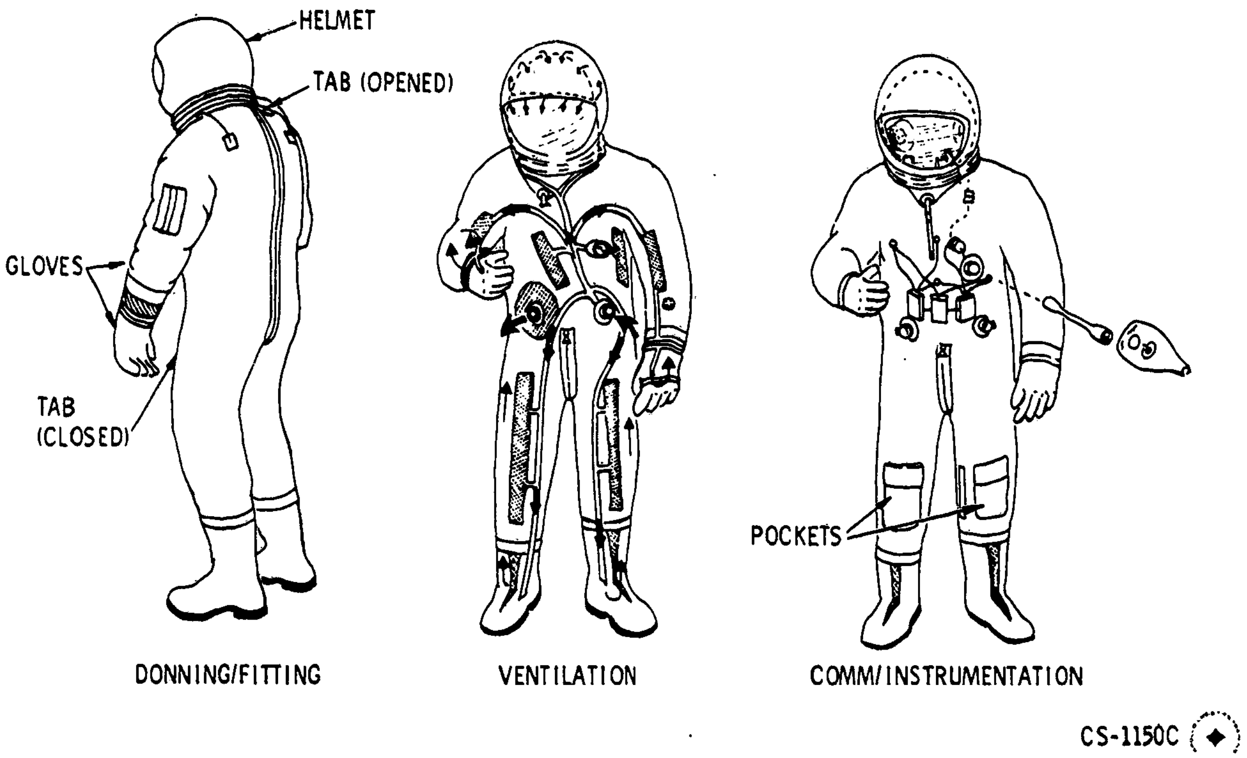

Figure 6-7. Apollo Block I Pressure Garment Assembly

Accessories of the suit are the neck and wrist dams, blood pressure cuffs, and urine collection bag. Operational use of the accessories is optional and will vary in accordance with the mission.

6.4.3.1.1 The Torso and Gloves.

The PGA torso has four layers. From the inside, the first layer is a combination liner and ventilation layer. The ventilation distribution tubes guide incoming oxygen to all extremities. The oxygen also passes through net openings to circulate around the astronaut. The actual cooling takes place as the gas flows from the extremities (higher pressure) to the return (lower pressure) over the CWG. The second layer is a pressure-tight layer, to contain the oxygen or the 3.7-psi operating pressure. The third layer is a restraint layer of strong netting to restrict bulging and enlarging so movement will be unimpared when pressurized. The last, and outside layer is a protective cover. There is a pressure line from the pressure layer (2nd layer) to a surface pressure gauge to allow the astronaut to monitor the pressure. At the waist is an intake connector valve on the left and a return connector valve on the right.

The outside protective layer has pockets on the arms and legs. The arm pockets contain such articles as neck and wrist dams, handkerchiefs, and pencils. The leg pockets contain scissors.

The neck ring is an aluminum ring, and when mated with the helmet, has O-ring seals. Cables are attached to the neck ring to hold it down when pressurized.

The boots are attached to the legs by laces and are not airtight. A sock from the leg fits into the boot and is airtight. The boots will not be removed during the mission.

The gloves are attached to the arms with a ball race lock and are scaled with O-rings.

A zipper runs from the navel, underneath the crotch, and up the spine to the neck ring. The tab is by the navel when sealed (closed) and by the neck ring when opened. To assist the one-man donning, the tab has a 6- to 10-inch lanyard attached to it. The suit has the capability of one-man donning in less than 5 minutes. It can be donned by having the helmet and gloves attached or attaching them after donning the torso.

The communication and biomedical cables exit through a 61-pin connection at the left breast.

6.4.3.1.2 The Helmet.

The helmet is a plastic shell. It has a liner inside, ear cushions with earphones, and two microphones. On the outside, a visor is pivoted at the ears. A visor protective cover of thin plastic (Cycolac) covers the top of the helmet. A ring seal is at the neck. It will set in the torso neck ring and is held in place by a clamp.

To pressurize the suit, the visor (or faceplate) must be closed. It is rotated down across the face and presses against a seal, and is held in position by a clamp-latch.

6.4.3.1.3 Neck and Wrist Dams.

The primary function of the dams is postlanding sealing of the PGA during water activity.

The dams are wide rubber bands. The neck dam fits over the torso neck ring and around the neck. This keeps the sea water out of the suit. The helmet must be removed. When the gloves are removed, the wrist dams seal the wrists and the crewman will float in the torso.

An optional dam use during the mission would be to cool the body while in the suit with the gloves and helmet off. This is restricted to a short period of time as the crewmans respiration would produce an excessive CO_2 concentration. The comm helmet will be used for communications during this period.

6.4.3.1.4 Urine Collection Device (GFP).

During the standby, hold, launch, and boost phases, the crewman will be suited. A continuous suited period of 3 to 6 hours can be experienced so provisions must be made to urinate within the PGA.

The function of the urine collection bag is to collect and store 1200 cc of urine. There is an external catheter (roll-on) connected to the bag. The bag fits around the crotch and hips and is held into place by Velcro attached to Velcro on the CWG.

When mission operations permit, the suit is unzipped and the urine bag is removed. A valve on the bag will connect to the waste management system, and the urine will be dumped overboard.

6.5 PGA STOWAGE.

6.5.1 TORSO AND GLOVE STOWAGE.

The gloves will be left attached to the torso and stowed together. The PGA helmets will be stowed separately. The suit stowage bag is made of sage green, nylon cloth, 36 inches long, 20 inches wide, and can be expanded from 3 to 12 inches high. It has an aluminum rod frame to maintain the form. A partition separates the bag into two compartments. On the top are flaps held closed with Velcro. Three strips of Velcro loop are on the bottom to anchor the bag on three strips of Velcro hook on the aft bulkhead.

The two-PGA stowage area is beneath the commander's couch (left) on the aft bulkhead. An additional stowage bag is located beneath the head of the pilot on the aft bulkhead near the hatch between the LiOH cartridge stowage boxes and the sidewall. The suit stowage bag is similar to the two-suit bag.

6.5.2 HELMET STOWAGE.

The PGA helmets are stowed only during nondynamic periods, or zero g. Three helmet mid-course stowage bags are provided. The bags (GFP) are located on the aft bulkhead under the center couch.

6.6 PGA CONNECTING EQUIPMENT.

6.6.1 PRESSURE GARMENT ASSEMBLY (PGA) ELECTRICAL ADAPTER (GFP).

The PGA electrical adapter provides interface between the PGA and the cobra cable since the connectors are not compatible.

The PGA adapter is 18 inches in length with a suit interface of a 61-socket connector and the cobra cable interface with a 37-pin connector. There are three adapters.

When the suits are removed and stowed, the PGA adapters will be disconnected from the suit and stowed. They will replace the CWG adapters in the ELECTRICAL ADAPTER stowage compartment in the RHEB.

6.6.2 OXYGEN HOSE (UMBILICAL) (GFP). (Figure 6-8)

The function of the oxygen hose is to interconnect the PGA and the CM ECS.

The oxygen hose is a dual hose, each hose having an inside diameter of 1.25 inches and made of silicon rubber with spiraling steel wire reinforcement.

The ECS end has a double D connector while the suit end splits the hoses about 15 inches from the end. Each hose has an elbow nozzle to connect to the suit.

There are two hoses: one 72 inches long and one 81 inches long. A nylon strap is bonded approximately every 12 inches to restrain the cobra cable to the hose during suit operations.

The double D connector on the ECS end remains connected during the mission. The hose is routed behind the MDC and held in place by tie-down straps. When disconnected from the suits, the ends are routed from the rear of the MDC to the forward bulkhead and strapped. To prevent the incoming oxygen from being sucked into the return side and not into the cabin, the return nozzle will be capped with the oxygen hose return cap, which is attached to the hose with a lanyard.

6.7 CREW COUCHES.

The crew couches support the crew during acceleration and maneuvers up to 30 g's forward, 30 g's aft, 18 g's up and down, and 15 g's laterally.

The spacecraft contains unitized crew couches integrally bolted together in a unit structure.

The couches are designated one of three ways. Structurally, they are left, center, and right. By crew positions, they are 1, 2, or 3 or commander, senior pilot, and pilot (left to right).

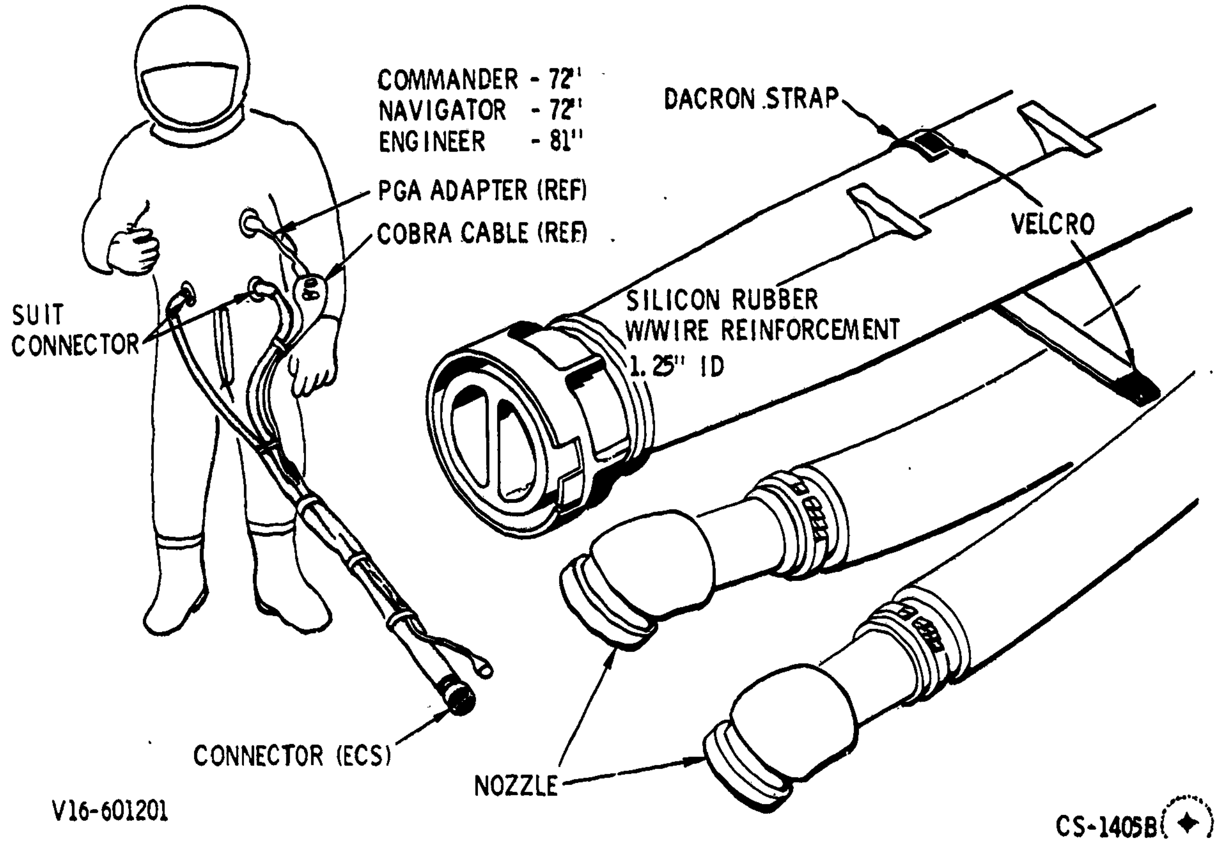

Figure 6-8. O_2 Umbilical Hose Assembly, Block I

6.7.1 CREW COUCH STRUCTURE.

The crew couch structure consists of three crew couches: the left, center, and right (figure 6-9). It is fabricated of aluminum and weighs approximately 400 pounds. The left and right couches are identical. The center couch connects the left and right couch into a single unified structure.

The couch structure, in a one-g environment, is supported by the impact attenuation struts: the four X-X struts from the forward bulkhead, the two Z-Z struts from the aft ring, and the two Y-Y struts in compression against the side panels. The X-X and Z-Z struts connect to the crew couch structure at the left and right couch main side beams.

The left and right couches are capable of the 170-degree position but will not be placed in that position because of equipment interference beneath those couches.

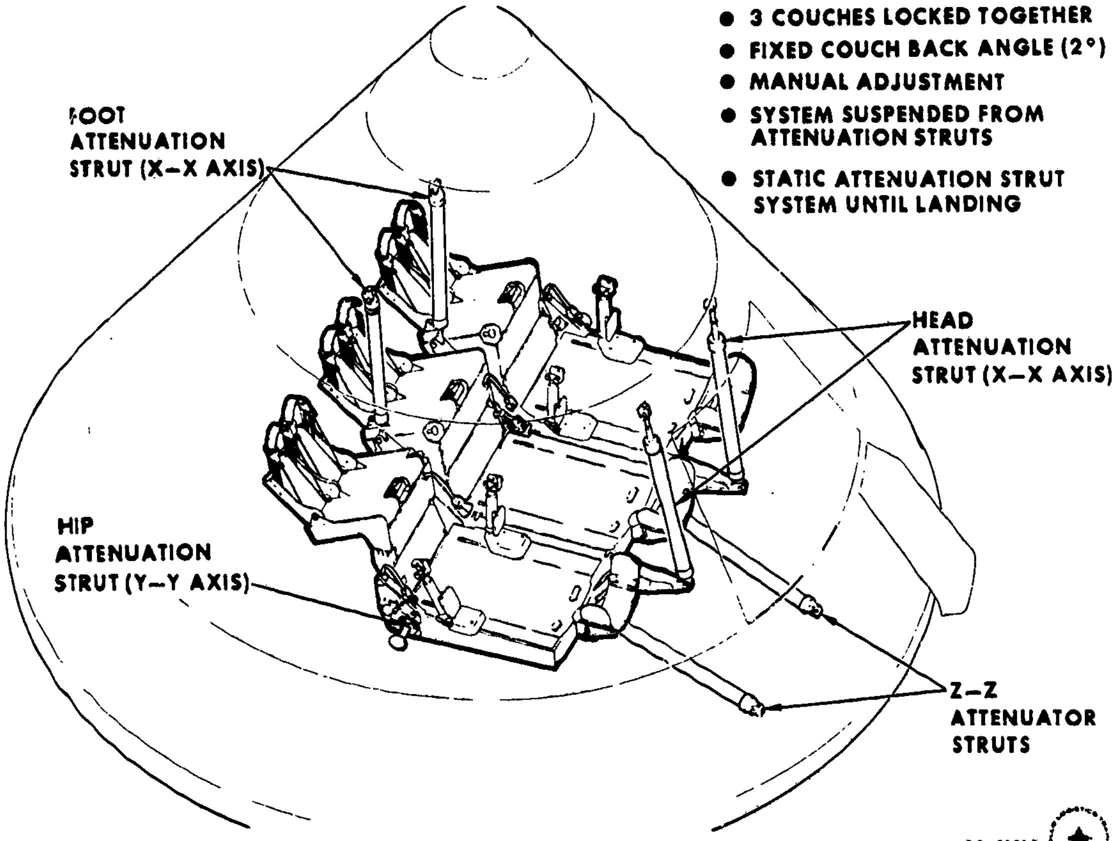

Figure 6-9. Crew Couch Installation

The additional LEB access/docking position will be used during orbit to gain room near the LEB. The seat pan angle remains 96 degrees while the couch structure (all couches) moves 6.5 inches toward the hatch.

6.7.2 CREW COUCH POSITIONS. (Figure 6-10)

6.7.2.1 Occupied Positions.

The most utilized position is the 96-degree position assumed for the launch, orbit, and entry phase. For a 50 percentile crewman, the hip angle is 108 degrees and very easy to assume. It gives maximum support to the body during high g loads.

The 170-degree or flat out position is used primarily for egressing from the center couch. All egressing to the LEB will be from the center couch. For this reason, the lower armrests are removed and stowed,

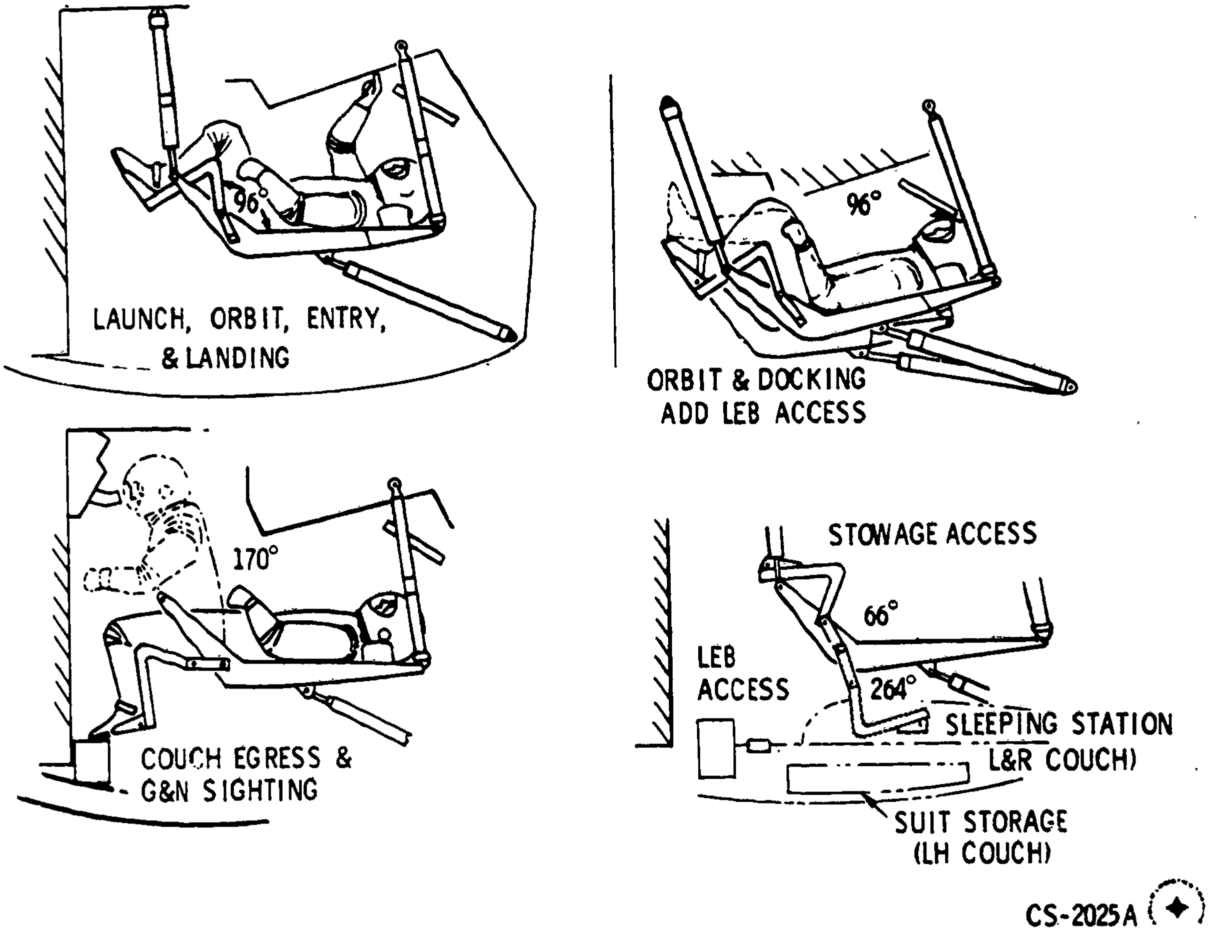

Figure 6-10. Crew Couch Mission Positions and Seat Angles, Block I

making easy egress from right and left couches into the center couch. Another use of the 170-degree position is G&N sighting. The 50 percentile crewman can position himself on the seat pan with his feet in the footrests and sight through the G&N eyepiece.

6.7.2.2 Unoccupied Positions.

The 66-degree seat pan angle position is used primarily for right and left equipment bay stowage access.

The 264-degree position necessitates rotating the seat pan under the backrest. This will clear the LEB area for maintenance activities. Due to restricted clearance beneath the left and right couches, this position is restricted to the center couch only. During use of the fecal canister, this is the desirable seat pan angle.

6.7.3 CREW COUCH COMPONENT DESCRIPTION. (Figure 6-11)

The crew couches are basically the same and the modular components interchangeable. The backrest assemblies differ the most because of the docking position mechanism in the center couch.

6.7.3.1 Headrest.

The headrest is constructed of honeycomb aluminum and has folding tips. It is padded on the inside and both sides of the tips. During maneuvers requiring PGA helmet restraint, the tips are left extended. For orbit and zero g, the tips are folded, affording freedom of movement for nominal visibility.

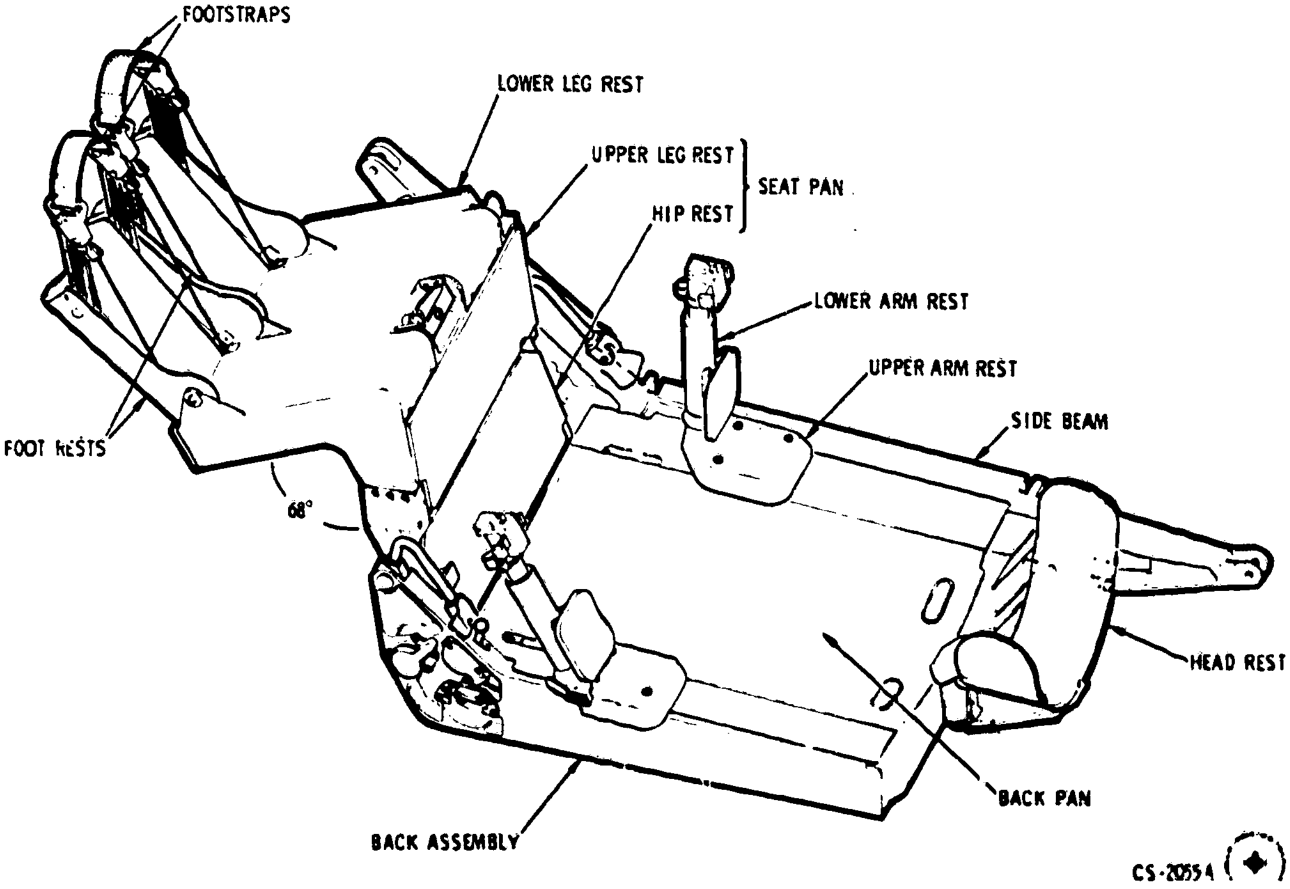

Figure 6-11. Left-Hand Couch Assembly (96-Degree Position)

The headrest has a 3-inch longitudinal movement for adjustment to crewman torso length. The headrest and support will fold under the couch for purposes of accessibility and ingress to the couches.

6.7.3.2 Backrest.

The backrest is constructed of ribs and beams covered with aluminum sheet and is 32 inches long and 22 inches wide. The left and right couch back pans are attached to the integral side beams, the inboard beam of which is 56 inches long and the primary structural member of the couch support.

The backrest assembly is contoured and contains the takeup reel system for the shoulder straps. The back pan is padded in the areas of crewman contact.

6.7.3.3 Armrests.

The armrests attach to the forward surface of the backrest and are adjustable. They consist of an upper and lower armrest. The upper armrest can be adjusted for length of arm and torso.

The lower armrest inserts into and is supported by the upper armrest at an angle of 90 degrees. It is secured by a leverized pin device for quick removal. A tubular shaft extends past the rest pad and contains the mounts for the controls. A major function of the armrests is to mount the SCS controls. The left couch left armrest has an adapter mount for both translation controls T1 and T2, and mounts at an angle of 120 degrees. All other armrests (3) mount at an angle of 90 degrees. The left couch right armrest supports a rotation control (R1). The center couch has no armrests.

On the right couch left armrest is a fitting to which the other rotation control (R2) can be attached for use by the center astronaut. By using an adapter, one translation control (T2) can be mounted for use by the right astronaut.

Normally, the right couch right armrest supports the second rotation control (R2). A third position for the rotation control (R2) is attached to the LEB G&N panel for use during navigational sightings.

6.7.3.4 Seat Pan and Footrest.

The seat pan and footrest has three components: the hiprest, legrest, and footrests.

The hiprest and upper legrest functions as a seat or seat pan. The lower legrest supports the lower legs, and the footrests support and restrain the feet. The hiprest makes an angle of about 170 degrees with the upper legrest, forming the seat pan. There are two pivot points: one at the aft of the hiprest, and the other where the hiprest and legrest intersect. Part of the mechanism for positioning the seat angles at 96, 170, and 264 degrees is housed in the hiprest.

The lower legrest houses the mechanism for positioning the seat in the 66-degree angle and tightening or loosening of the footstraps. The upper legrest to lower legrest angle is fixed at 68 degrees. The footrests pivot so they can fold parallel to the lower legrest. Footstrap rotation bars are spring-loaded to the release position and are pulled to the restraint position by cables. The cables run to a reel that can be locked or released by a control in the lower legrest.

6.7.3.5 Crew Couch Pads.

The following portions of the couches have pads: headrest, back pan, armrests, and seat pan.

The padding is a triloc material 3/16-inch thick. It is structured of woven dacron wire-like fibers in a low-density pattern giving good ventilation.

The back pan and seat pan pads are composed of three layers of triloc covered with nylon netting, making approximately 1/2 inch of padding.

The armrest and headrest pads are 3/16-inch-thick layers between nylon netting covers.

The pads are attached to the metal surfaces with Velcro strips and can be removed during the mission if the need arises.

6.7.4 MECHANICAL ADJUSTMENTS. (Figure 6-12)

6.7.4.1 Headrest Adjustments.

To adjust the headrest for crewman height, turn the adjustment with the tool set 4-inch CPS driver. It has a 7/32-inch hex drive.

The headrest is folded down by pulling the headrest lock headward. The headrest is spring-loaded to the stowed (down) position so it should be restrained by the hand. To bring it up, pull with the hand; pull headrest lock handle back to clear the hook, position headrest in the normal position, and push the lock handle footward.

6.7.4.2 Armrest Adjustments.

The lower armrests are removed by pulling the armrest lockpin release outward to pull the pin, and then pulling the armrest upward to remove. The left couch right armrest and the right couch left armrest are stowed on the couch side beams by Velcro seats and straps.

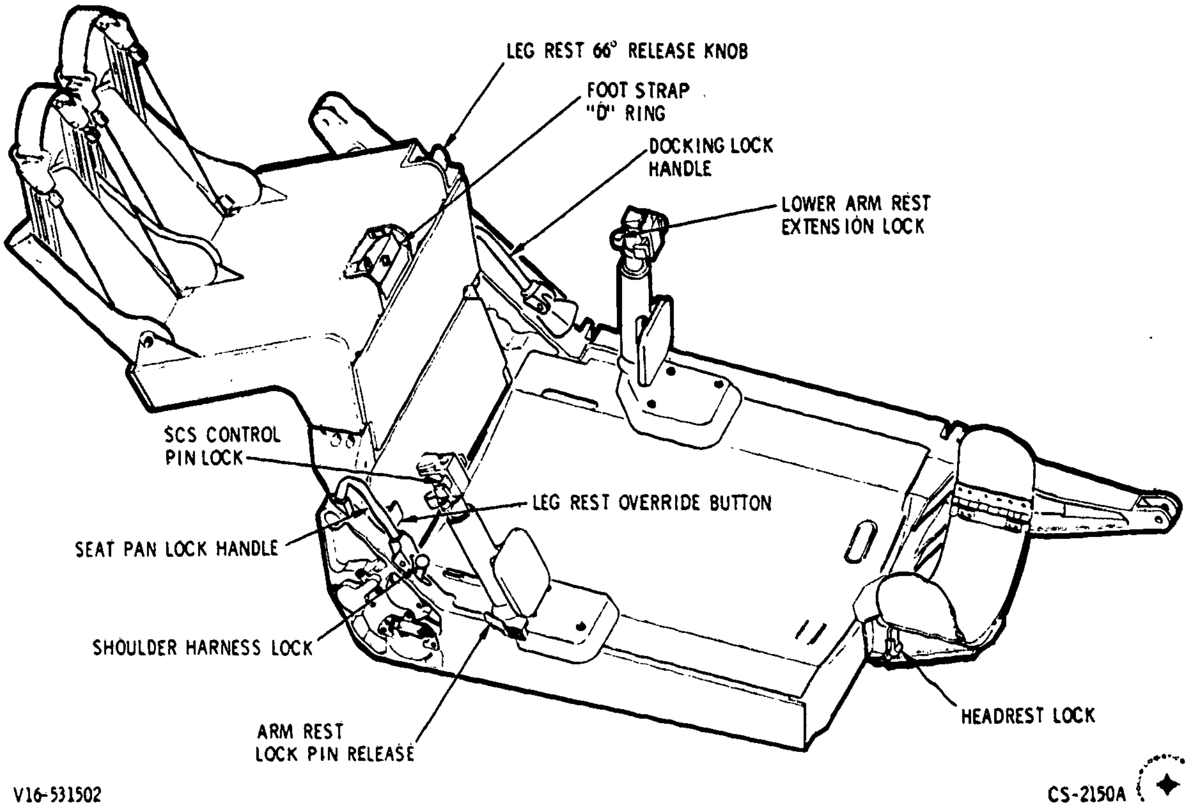

Figure 6-12. LH Crew Couch Operating Mechanisms, Block I

To attach SCS controls, push the SCS control pinlock to the left; slide the control on the dovetail; and push the lock to the right locking a retention pin.

The lower armrest can be extended by rotating the extension lock toward the left, extending the armrest and locking into position by pushing the lock to the right.

6.7.4.3 Seat Pan Adjustment Directions.

SPLH = Seat Pan Lock Handle

LRRK = Legrest Release Knob

LROB = Legrest Override Pushbutton

From (Deg)	To (Deg)	Procedure	Remarks
A 96	170	1. Lift the SPLH and push with feet. 2. Release the SPLM; continue pushing with feet until seat stops at 170°.	1. Key locking the leg pan will disengage. 2. Key on pivot cylinder will engage side beam keyway.
170	96	1. Lift the SPLH and pull with feet. 2. Continue lifting SPLH, pulling with feet until seat stops at 96°, release SPLH.	1. Key on pivot cylinder will disengage. 2. Key on pivot cylinder will engage side beam keyway.
B 96	264	1. Lift SPLH and rotate downward. 2. Continue to lift SPLH passing through 170° position. 3. Release SPLH and continue rotating until seat stops at 264°.	1. Key locking leg pan will disengage. 2. Maintains the leg pan pivot key in disengaged position. 3. Key on pivot cylinder will engage in 264° position slot.
264	96	1. Lift SPLH and rotate seat toward 170°/96° position. 2. Continue to lift SPLH, passing through 170° position. 3. Rotate to 96° position and release SPLH.	1. Leg pan pivot key disengages allowing rotation. 2. Leg pan pivot key maintained in disengaged position. 3. Leg pan point pivot key will engage 96° position slot.
C 96	66	1. Pull up with feet until 66° latch engages the side beam.	1. Disengages seat to hip-rest detent. 66° latch will drop in slot on beams and catch.
66	96	1. Press the LRRK with feet until 96° position is reached.	1. 66° catch disengages. On reaching 96° position, detent will engage.

6.7.4.4 Footrest and Footstrap Adjustments.

The footstraps are controlled by a footstrap D-ring (FSDR) between the astronaut's knees. The D-ring is connected to a cable that runs through a tube to a drum-axle-drum mechanism. By pulling on the D-ring and rotating the drum and axle, cables pull the footstraps to the restrained position. The drums have ratchets that lock the footstraps in position and retain the feet in the footrest. To release the footstraps, the FSDR is pressed, forcing the connecting tube to disengage the ratchet and release the footstraps.

6.7.4.5 D-Ring Handle Extension.

The D-ring handle can be reached easily while the PGA is unpressurized. However, when pressurized, the PGA slightly restricts the 90 percentile crewman from reaching the D-ring, thus making it difficult to lock or free the feet. The D-ring extension has been designed to connect to the D-ring handle. The extension has a 7/16-inch hex shaft to insert into the D-ring handle and control it (paragraph 6.10.10). It has a ball-lock feature to connect to the D-ring. The D-ring extension will be accessible on the right girth shelf.

6.7.4.6 Docking Position Adjustment.

The mechanism that releases the lock which allows the couch structure to slide to the docking position is located in the backrest of the center couch; however, the docking lock handle is on the right side beam of the left couch.

The forward end of the Z-Z struts attaches to the couch by a slide that runs in tracks in the side beams. A lever-lock device (finger latch) locks the slide in two positions: normal and docking. The lever-lock is spring loaded in the lock position. The docking lock handle (DLH) disengages the lever-lock only while the DLH is lifted. The couch structure must be pulled to the docking position by the center astronaut pulling on hand holds located on the side hatch.

When transversing to the docking position, the seats remain in the 96-degree position. The left crewman then lifts the DLH and the center crewman grabs a handhold and pulls the couches toward the side hatch. After movement, the DLH can be released. When the couches have moved approximately 6.5 inches, the lever-locks will drop into slots, locking the couches in place.

To return to the couch normal position, the DLH is lifted and the couches are pushed toward the LEB. The DLH is released and the lever-locks will drop into slots when in position.

6.7.4.7 Shoulder Strap Adjustment.

The shoulder strap takeup reels are on the couch backrest. They allow 10 inches of play and are locked by the shoulder strap lock on the left sides of the couches. A headward pull will unlock the shoulder straps, and a forward and down push will lock the shoulder straps.

6.8 CREWMAN RESTRAINTS.

The crewman restraints provide restraint and physical attachment to the astronauts.

a. In the couches during launch, weightless phases, abort, entry, and landing
b. During weightless periods while performing tasks out of the crew couch
c. While in the sleep position
d. When performing extra vehicular activities

6.8.1 HIGH G-LOAD RESTRAINTS.

6.8.1.1 Crewman Restraint Harness.

There are three restraint harnesses per spacecraft, one for each crewman.

The restraint harness consists of a lap belt and two shoulder straps interfacing the lap belt at the buckle. The harness is permanently attached to the couch and is not removable. The lap belt interfaces straps connected between the seat and back pans. This configuration provides adequate hip support (figure 6-13).

The shoulder straps pass through slots in the upper portion of the back pan and are connected to spring-loaded takeup reels fastened on the underside of the back pan. The takeup reel allows 10 additional inches of strap travel at maximum 10-pound pull. The crewmember can lock or unlock these takeup reels simultaneously by actuating a lever on the side of the couch.

The lap belt buckle is a lever operated, three point release mechanism. By pulling a lever, the shoulder straps and right lap belt strap will be released. The strap ends and buckle are equipped with Velcro patches and may be fastened to mating patches on the couch when not in use. This also prevents the buckle and attachments from floating free during zero g. Each strap can be individually tightened or loosened by the crewman (figure 6-14).

The maximum force on the harness straps will be 3115 pounds at the chests. The straps are dacron, 1-7/8 inches wide, and have a strength of 6000 pounds.

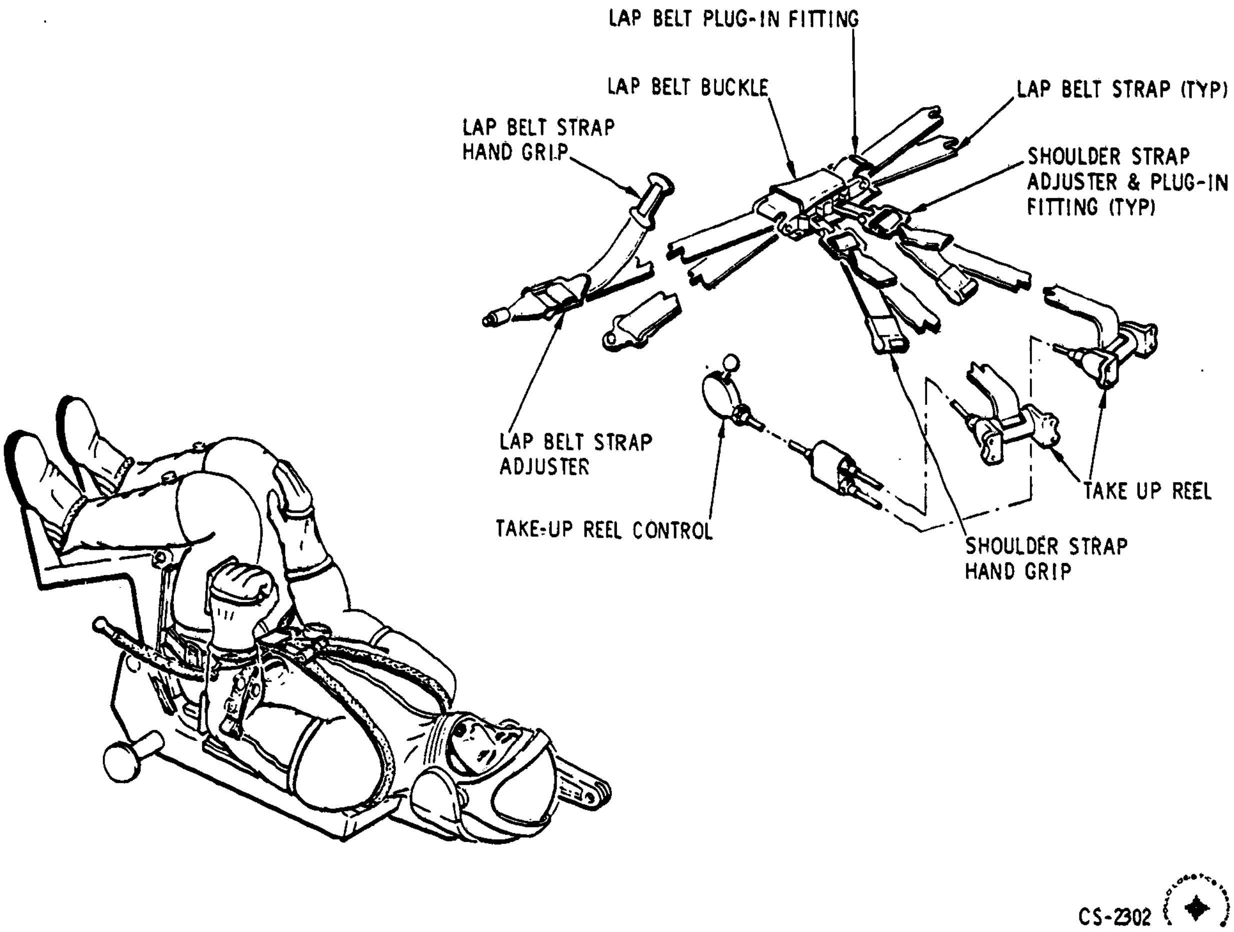

Figure 6-13. Crewman Restraint Harness Components

The harness will be on and locked during all maneuvers when g loads are expected such as launch, delta V, docking, entry, and landing. Securing in the couch prior to impact will include locking of the foot straps in addition to fastening of the harness. The harness can be tightened and loosened readily by the astronaut.

6.8.1.2 Weightless Restraint.

To assist the crew in egressing from the couch, five hand straps are attached behind the MDC (figure 6-15).

When out of the couch, the astronaut will restrain himself with handholds and Velcro foot restraints. Part of the aft bulkhead will be surfaced with Velcro hook material. The astronaut will wear Velcro pile material on the soles and heels of his PGA boots when in the PGA.

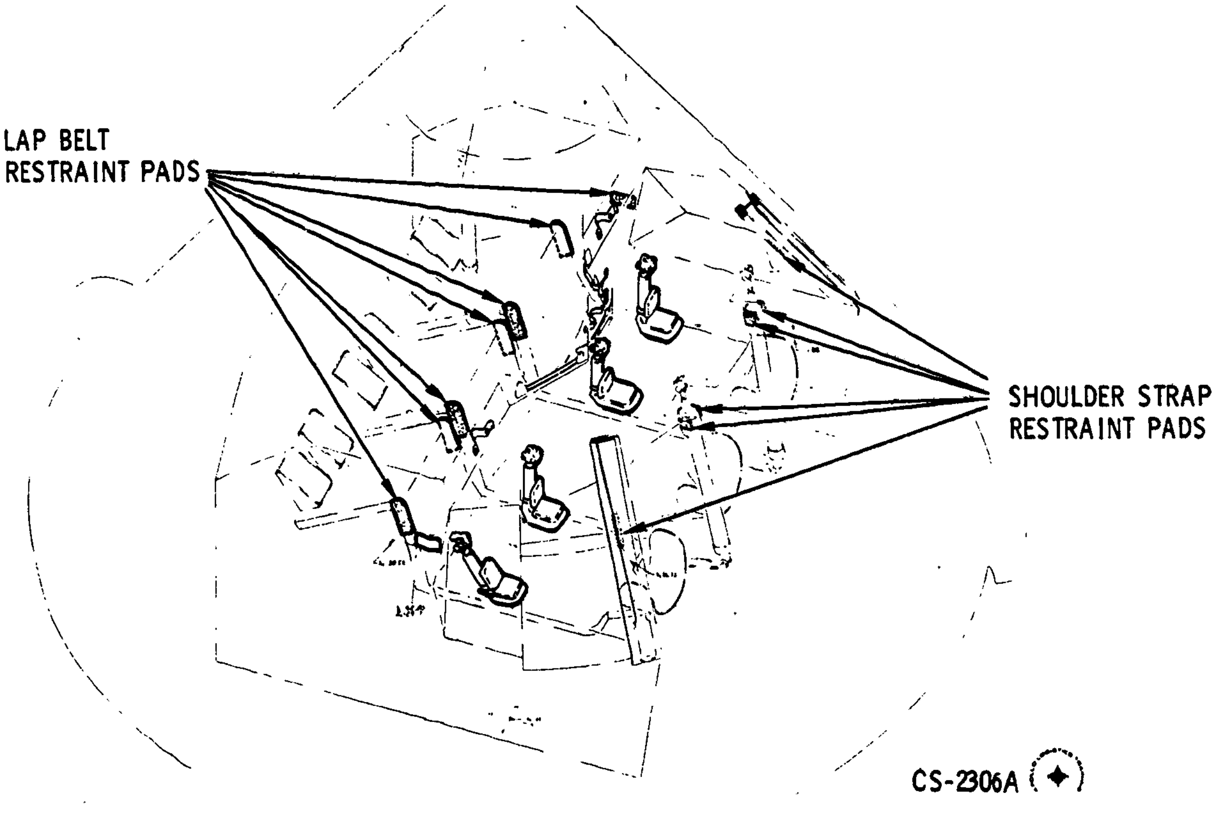

Figure 6-14. Restraint Harness Velcro Restraint Pads

Restraint sandals (figure 6-16) will be worn with the CWG. The sandals are fabricated of a flexible plastic Royalite PR55. Velcro pile material is bonded on the ball and heel of the sole. The sandal is held closed and on the foot by Velcro patches.

There are three pairs of sandals which are stowed in the LHEB with the CWGs and flight coveralls.

6.8.1.3 Guidance and Navigation Station Restraint.

Two positions may be utilized at the G&N station: standing position or center couch G&N position. The astronaut will restrain himself in the standing position by fastening his restraint sandals to the aft bulkhead and using a handhold on the left side of the G&N console.

The astronaut will restrain himself in the center couch at the G&N station by positioning the couch to the 170-degree hip angle and restraining his feet with the couch foot straps.

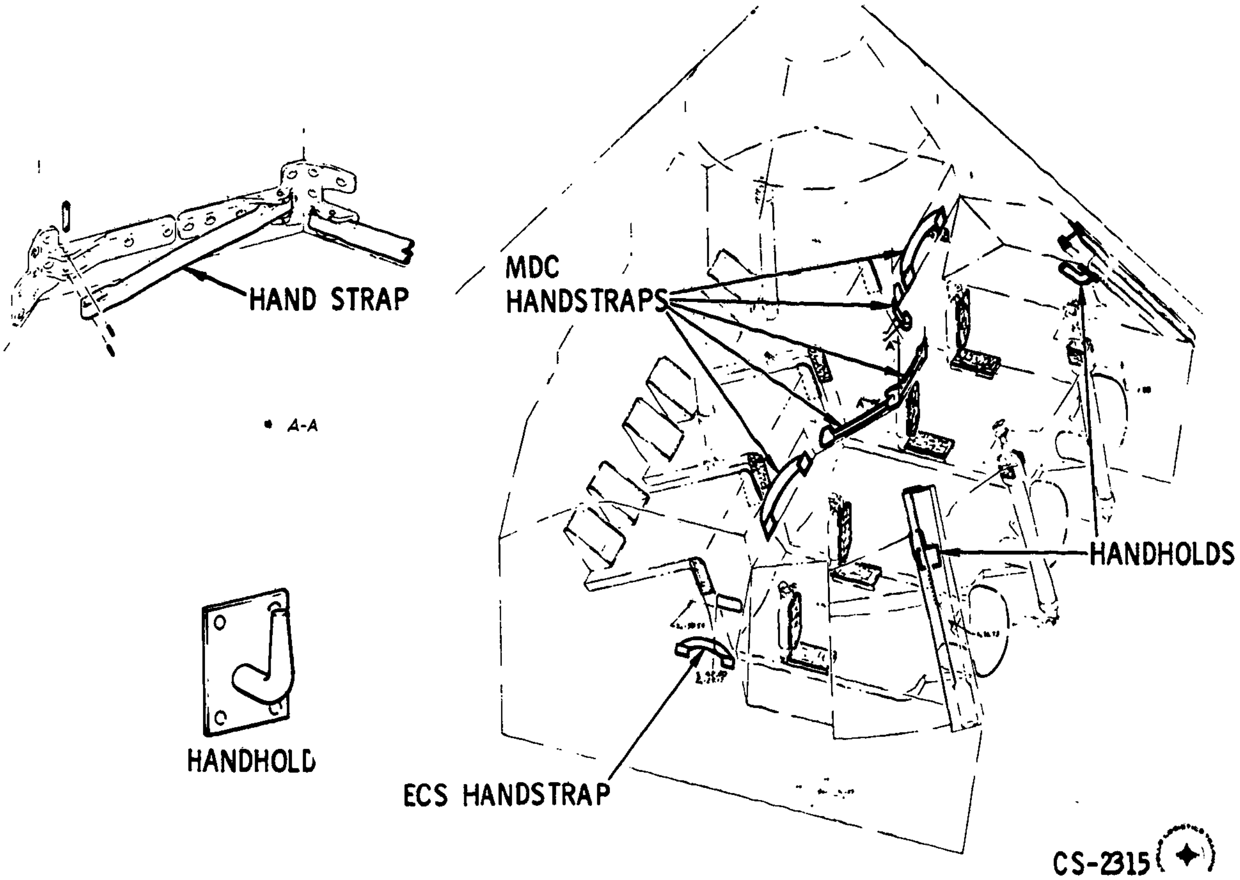

Figure 6-15. CM Interior Handgrips

6.8.1.4 Crewman Sleeping Restraints. (Figure 6-17)

The crewmen sleeping position will be under the left and right couch with the heads toward the hatch. He will be restrained in position by the crewman sleeping restraint.

The restraints (2) are dacron fabric, lightweight, sleeping bags, 64 inches long, with zipper openings for the torso and 7-inch diameter neck openings. They are supported by two longitudinal straps that attach to the LiOH canister storage boxes on one end (LEB) and to the CM inner structure at the other end.

The crewman will occupy the sleeping bag while wearing his CWG and communications soft hat, or lay on top if wearing his PGA. The cobra cable and "sleep" adapter will remain connected. One sleeping restraint will be stowed in each PGA stowage bag during boost and entry.

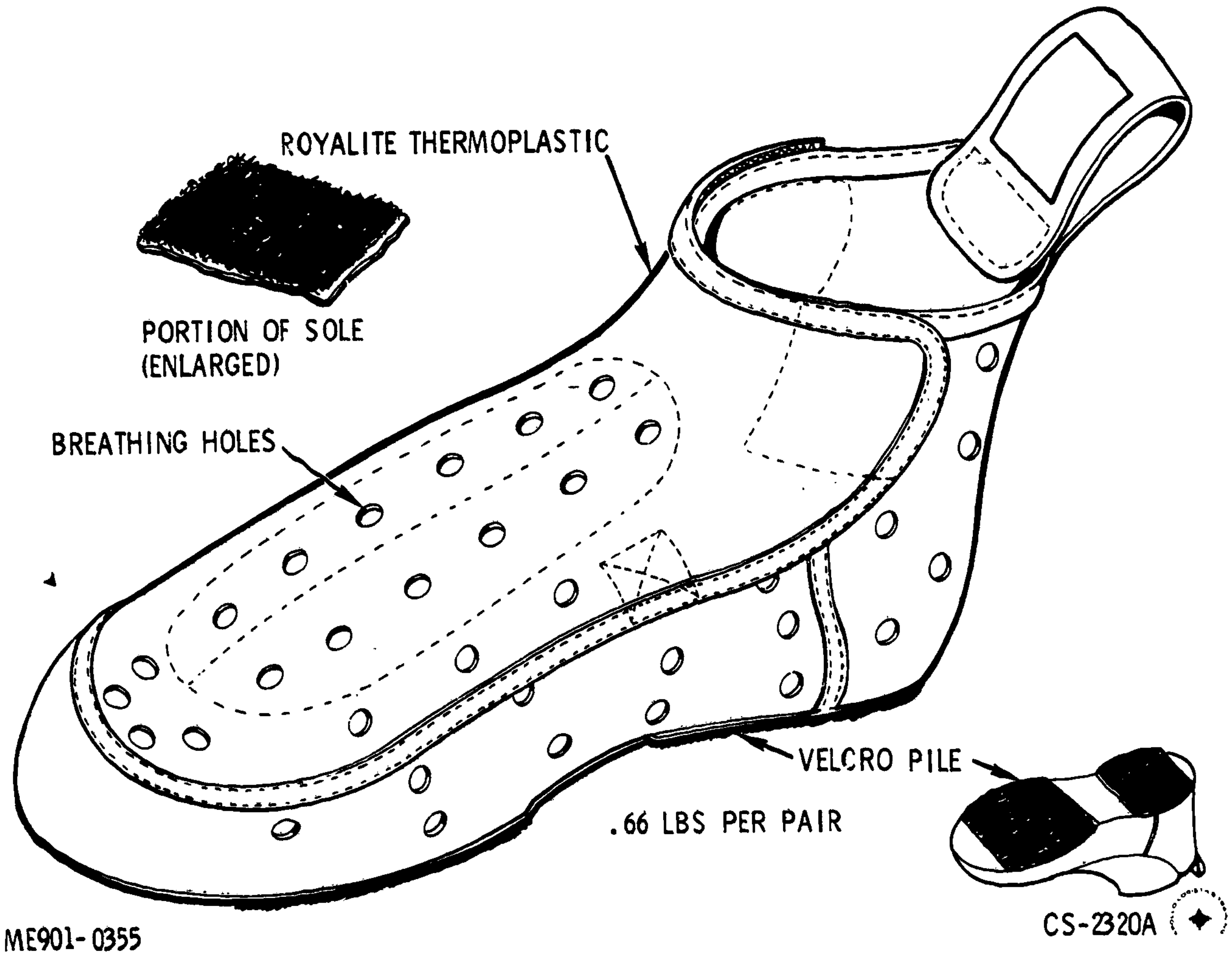

Figure 6-16. Weightless Crewman Restraint Sandal

6.9 FLIGHT DATA FILE (GFP).

The flight data file (figure 6-18) is a mission reference data file that is readily available to the crewman.

The data must be accessible to the commander and pilot in a pressurized suit while constrained in the crew couch. It must be available to the senior pilot at the lower equipment bay.

The flight data file contains checklists, manuals, and charts. The commander's and pilot's data file is stowed in nylon bags and the senior pilot's is stowed in a drawer container.

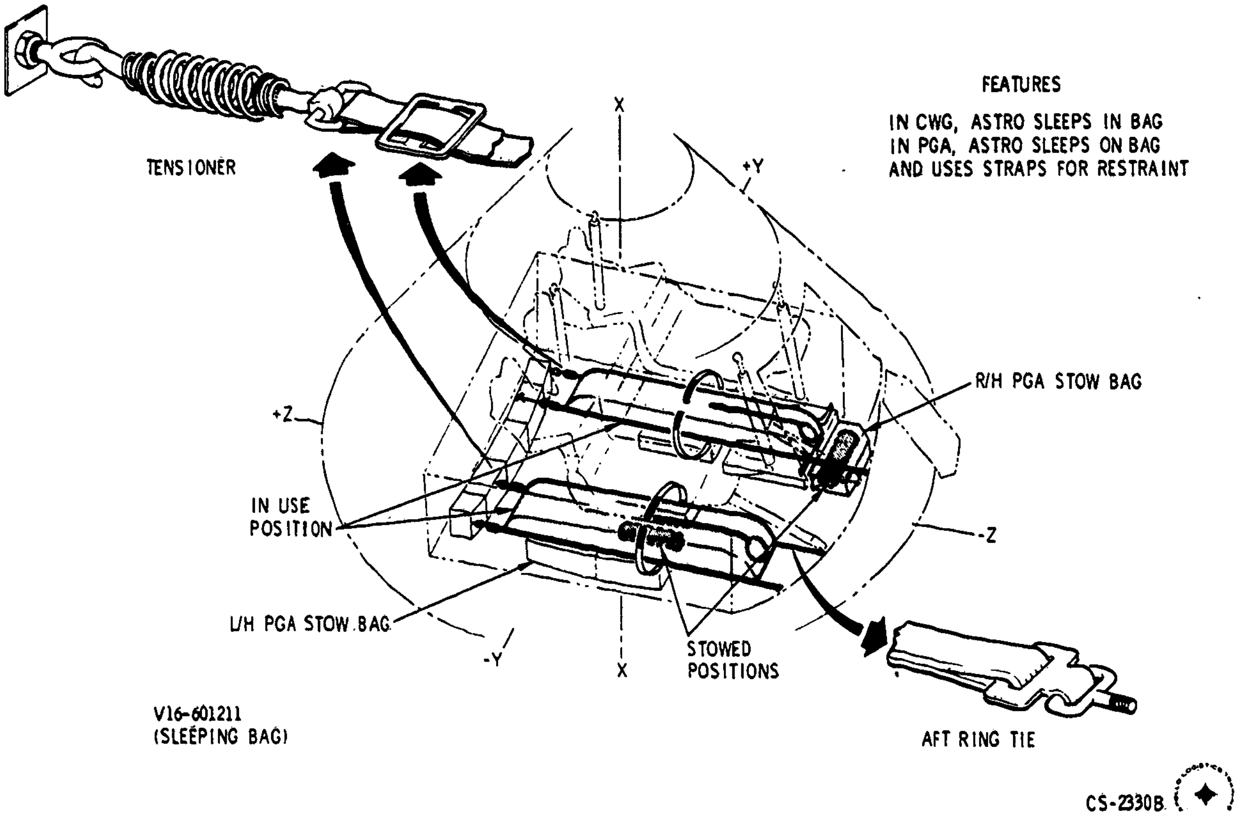

Figure 6-17. Sleeping Position Restraint Configuration

6.9.1 COMMANDER'S FLIGHT DATA FILE.

The commander's flight data file contains a commander's checklist, flight plan, and stowage bag. The stowage bag is nylon cloth material with pouches that close and are retain-closed by Velcro. A flap at the top is lined on the reverse side with Velcro attaching it to its stowage position. It is stowed on the left girth shelf near the commander's left shoulder.

6.9.2 SENIOR PILOT'S FLIGHT DATA FILE.

The senior pilot's data file contains a senior pilot's checklist, mission log and data, and stowage bag. The stowage bag is the same as the commander's except for the nomenclature. It is stowed on the right girth shelf near the senior pilot's left shoulder.

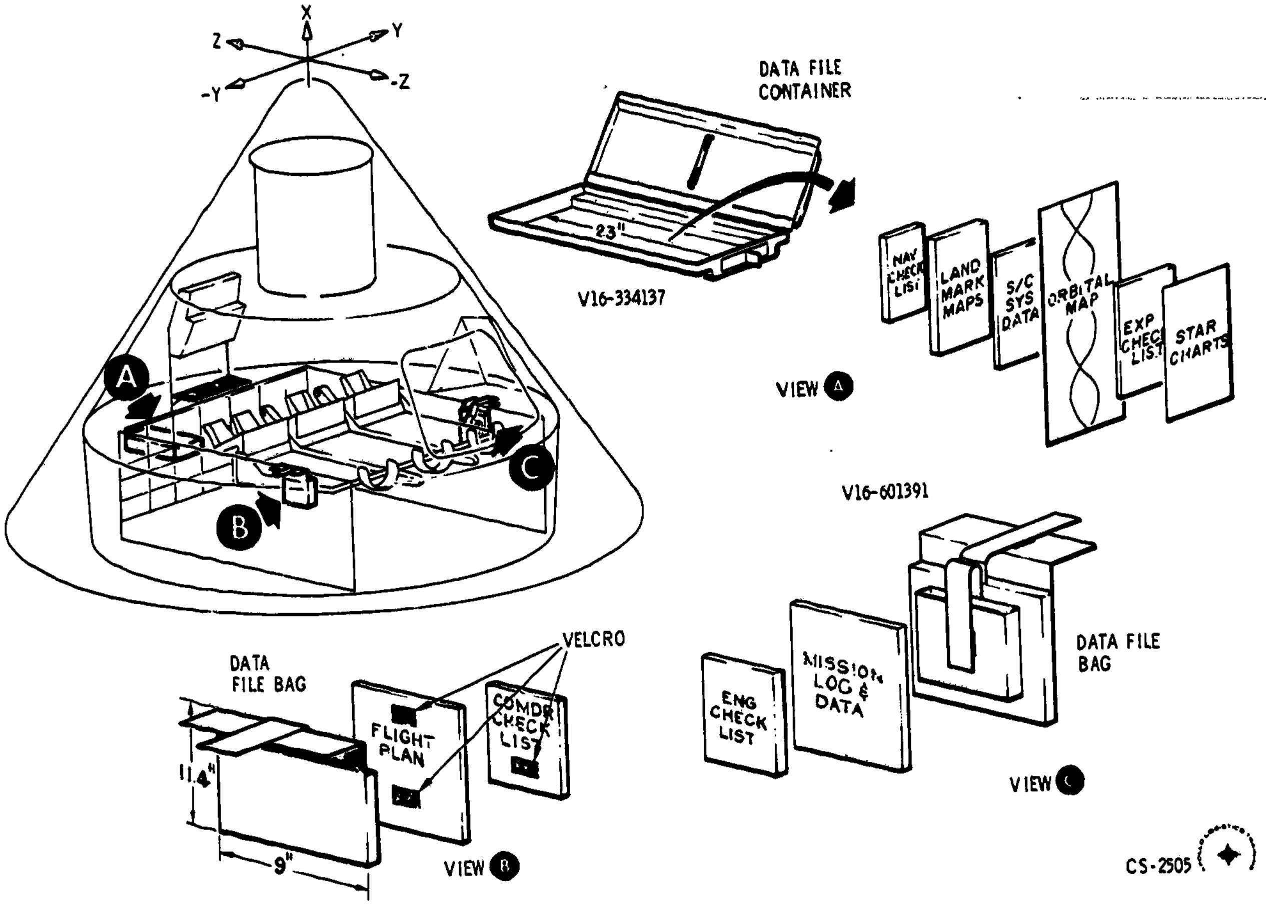

Figure 6-18. Flight Data File Configuration, Block I

6.9.3 PILOT'S FLIGHT DATA FILE.

The pilot's data file contains a pilot's checklist, landmark maps, star charts, S/C systems data, orbital map, and experiments checklist. Stowage is in a fiberglass container 23 inches long, 9.46 inches wide, and 1.75 inches deep. It has a hinged cover to contain the manuals when the container is removed from its stowage compartment in LEB. The container has nylon ribbon tab on each end to aid in pulling it out of the compartment. The compartment has a door with a simple bar latch to restrain the container.

6.10 CREWMAN IN-FLIGHT TOOL SET AND WORKSHELF (GFP).

The crewman in-flight tool set provides multipurpose tools and attachments for Apollo mission activities. The crewman in-flight tool set (figure 6-19) contains the following:

- Torque wrench
- Adapter handle
- 10" driver
- 5/32" short hex driver
- 7/32" hex driver
- 4" torque set driver
- Emergency wrench
- 2 T-handles
- 2 end wrenches
- 20" tether
- D-ring extension handle

Operationally, the tools are designated by a letter (A, B, C, D, etc.).

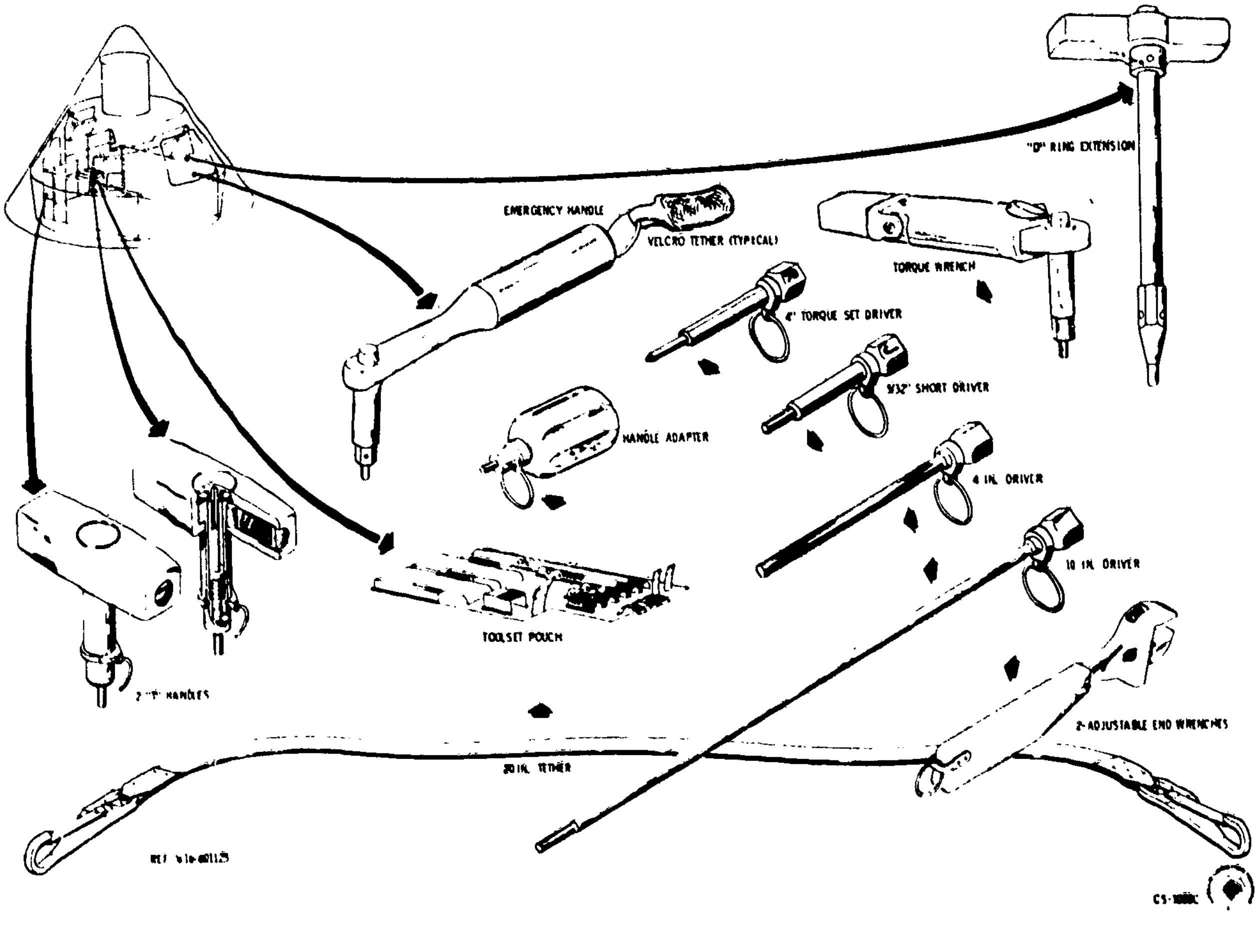

Figure 6-19. Crewman In-Flight Tool Set Configuration, Block I

6.10.1 TORQUE WRENCH (TOOL A).

The torque wrench has a torque limiting capacity of approximately 35 to 200 inch-pounds in the clockwise direction. It has a ratchet capability in the clockwise and counterclockwise direction. The pawl, which indicates operation, has three positions which are marked CW, LOCK, and CCW. The maximum torque capability in the LOCK position is approximately 400 inch-pounds.

The dual driving lug has a 7/16-inch hex male wrench with a ball-lock and a 5/32-inch hex male wrench. The drive lug fits all drivers. The pushbutton on top of the shaft controls the ball-lock which locks the drivers on. The lug reaches 2-1/4 inches beyond the face of the wrench.

Torque settings of 50, 100, 150, and 200 inch-pounds are calibrated and marked. The setting can be set by rotating the knob at the end of the handle and observing the bar in the slot on the underside of the handle. The following symbols indicate the torque values:

● = 50 inch-pounds
+ = 100 inch-pounds
◣ = 150 inch-pounds
■ = 200 inch-pounds.

6.10.2 ADAPTER HANDLE (TOOL E).

The adapter handle is approximately 3.5 inches long and 1.5 inches in diameter. It has a dual driving capability of 7/16- and 5/32-inch hexes and fits all drivers. A ball detent will assist in maintaining contact with the drivers.

6.10.3 10-INCH DRIVER (TOOL H).

All drivers have a 7/16-inch internal hex drive socket. The 10-inch driver is 11.125 inches long with a 10-inch shaft. The shaft end has a 5/32-inch hex drive.

6.10.4 4-INCH DRIVER (TOOL L).

The 4-inch driver is 5.125 inches long with a 4-inch hex shaft of 7/32-inch.

6.10.5 EMERGENCY WRENCH (TOOL B).

The emergency wrench is 6.25 inches long with a 2.5-inch drive shaft. The drive shaft has two hex drives: 7/16- and 5/32-inch. It is capable of applying a torque of 1475 inch-pounds and is a backup for the torque wrench. It has a ball-lock device to lock it in a drive. It is essentially a modified Allen head L-wrench.

6.10.6 T-HANDLE (TOOL C).

There are two T-handles per tool set. The T-handle is 2.75 inches long with an aluminum body. It has a 3/8-inch diameter ball-lock shaft with a 5/32-inch hex wrench. There is a torque break feature, calibrated by an adjustable screw at 35±5 inch-pounds, and then sealed. The ball-lock device is released by a pushbutton on the top of the handle.

6.10.7 END WRENCH (TOOL F) (2).

The adjustable end wrenches are a modified crescent wrench. It is very lightweight, made of aluminum, with an isotactic foam handle. The jaws openings width is from 1/4 inch to 1 inch.

6.10.8 5/32-INCH SHORT DRIVER (TOOL J).

The 5/32-inch short hex driver is 3.62 inches long with a 5/16-inch round shaft and a 5/32-inch hex drive of 0.7 inch.

6.10.9 4-INCH TORQUE SET DRIVER (TOOL R).

The 4-inch torque set driver has a No. 10 torque set on one end and a 5/16-inch driver on the other end.

6.10.10 IN-FLIGHT TOOL SET TETHER.

The tool set tether is a 20-inch strap with snaps at each end. Each tool has a tether ring or band to which the tether snap can be attached.

6.10.11 D-RING EXTENSION HANDLE (TOOL N).

The D-ring extension handle is a rod with a T-handle approximately 7 inches long. The rod end has a guide point tapering to a 7/16-inch hex about an inch long. Every other hex surface has a ball-lock. The T-handle has a pushbutton that controls the balls.

6.10.12 OPERATIONAL USE.

The in-flight tool set tools have multiple uses. Figure 6-20 is a matrix table for tool usage.

In the CM, items operated or adjusted by tools will have a small square placard nearby designating the tool (A through N and R) and the torque setting of the torque wrench. If the torque wrench is not used, just the designating letter (0.19-inch high) will be indicated.

The tool set is designated to be used either in the shirtsleeve environment or the PGA pressurized status.

6.10.13 STOWAGE. (Figure 6-19)

The tool set tools are stowed at various places. For launch and entry, some are stowed in positions ready for an emergency. During orbit, the tools are stowed in a location that affords easy access.

P = Primary Use
B = Backup
E = Emergency

Function (Designator)	Torque Wrench A	10" Driver H	7/32" Hex Driver L	5/32" Hex Sht Drvr J	Emergency Wrench B	Adapter Handle E	"T" Handle (2) C	Crank Handle D	Adj End Wrench (2) F	"D" Ring Ext. Handle N	4" Torque Set Driver R
A. Environmental Control System											
1. Open/close ECS valves on water (315) and O_2 panel (314). (LHEB)	B					B	P				
2. Close water-glycol accumulator isolation valve on panel 312. (LHEB)	P	P				B					
3. Unlatch/latch fasteners of ECU panel (313) over LiOH filter. (LHEB)	B	P				P					
4. Open/close water delivery device valve (304). (LHEB)	B						P				
5. Tighten fluid and gas line connections. (LHEB)									P		
6. Unlatch/latch fasteners of cabin atmosphere recirc. screen. (LHEB)	B	P				P					
7. Unlatch/latch fasteners (3) of access panel to coolant control panel (311). (LHEB)	B					P	P				
B. Guidance, Navigation, and Control System											
1. Unlatch/latch fasteners of "LOOSE PARTS STOWAGE" cover for G&N handles. (LHFEB)	B	P				P					
2. R/R G&N handles (2) on G&N panel. (LEB)	P					B					
3. R/R rotational control adapter on G&N panel (105). (LEB)	B	P				P					
4. R/R optics panel (104) cover. (LEB)	P					B					

Figure 6-20. Crewman In-Flight Tool Set Usage Chart (Sheet 1 of 2)

P = Primary Use
B = Backup
E = Emergency

Function (Designator)	Torque Wrench A	10" Driver H	7/32" Hex Driver L	5/32" Hex Sht Drvr J	Emergency Wrench B	Adapter Handle E	"T" Handle (2) C	Crank Handle D	Adj End Wrench (2) F	"D" Ring Ext. Handle N	4" Torque Set Driver R
5. Adjust scanning telescope shaft and trunnion axis. (LEB)				P		P					
6. Wind/set GMT clock (panel 306). (LHFEB)				P		B					
7. R/R sextant short and long eyepiece from eyepiece.	B	P				P					
8. R/R scanning telescope short and long eyepiece from eyepiece assembly.	B	P				P					
C. Mechanical Systems											
1. Adjust crew couch headrest.	B		P			P					
2. Adjust couch upper armrest.	B		P			P					
3. Stow translational control adapter-center couch legrest.	B		P			P					
4. Open side crew pressure (inner) hatch from C/M.					E						
5. Open side crew heatshield/thermal hatch from C/M (Emer).					B						
6. R/R sea water access tube plug. (LHEB)	P	P				B					
7. Lock/unlock couch footstraps when PGA pressurized.										P	
8. Tighten/loosen mirror U-joints.											P
D. Mission Experiments											
1. Lock/unlock screws (2) of SCIENT EQUIP B drawer.	B	P				P					

Figure 6-20. Crewman In-Flight Tool Set Usage Chart (Sheet 2 of 2)

6.10.13.1 In-Flight Tool Set Stowage Pouch and Tool Set Drawer.

The tool set pouch is located in the tool set drawer on the LEB. The worksheIf is stowed in the drawer on top of the tool set. The following tools are stowed in the pouch.

10" Driver
4" Driver
5/32" hex short driver
4" torque set driver
Adapter handle
2 end wrenches
Tether

The pouch is 21.25 inches long and 7.5 inches wide and is made of green nylon cloth. It has a small pouch with a retention strap for each tool and is marked with the tool name and designation. The tool set pouch is held to the drawer bottom by Velcro strips on the underside. The tether will be attached to a driver tether ring and laid in the drawer. The tool set drawer slides in and out on tracks and is held closed by a latch. In a corner of the drawer, a polyurethane block with a cutout for the torque wrench is located.

6.10.13.2 Miscellaneous Stowage.

The T-handles are stowed in the ECS panels at all times when not in use.

The emergency wrench is placed in the inner hatch latch mechanism for the mission. If it is needed, it can be removed and used.

The D-ring extension handle is stowed near the light fixture on the right girth, shelf-accessible to the pilot.

6.10.14 WORKSHELF ASSEMBLY. (Figure 6-21)

The workshelf assembly provides a table for food preparation and map/manual reading.

The workshelf is of aluminum sheet construction approximately 24 by 10.5 inches. At each end, there is a hinged support frame with slide latches. The shelf has two pivots so that it can be folded lengthwise, making storage easier. When stored, it is 24.5 by 6 by 1 inches.

The working top of the shelf is surfaced with Velcro hook material. Items that will be used in conjunction with the shelf will be equipped with Velcro pile material, facilitating zero-g restraint.

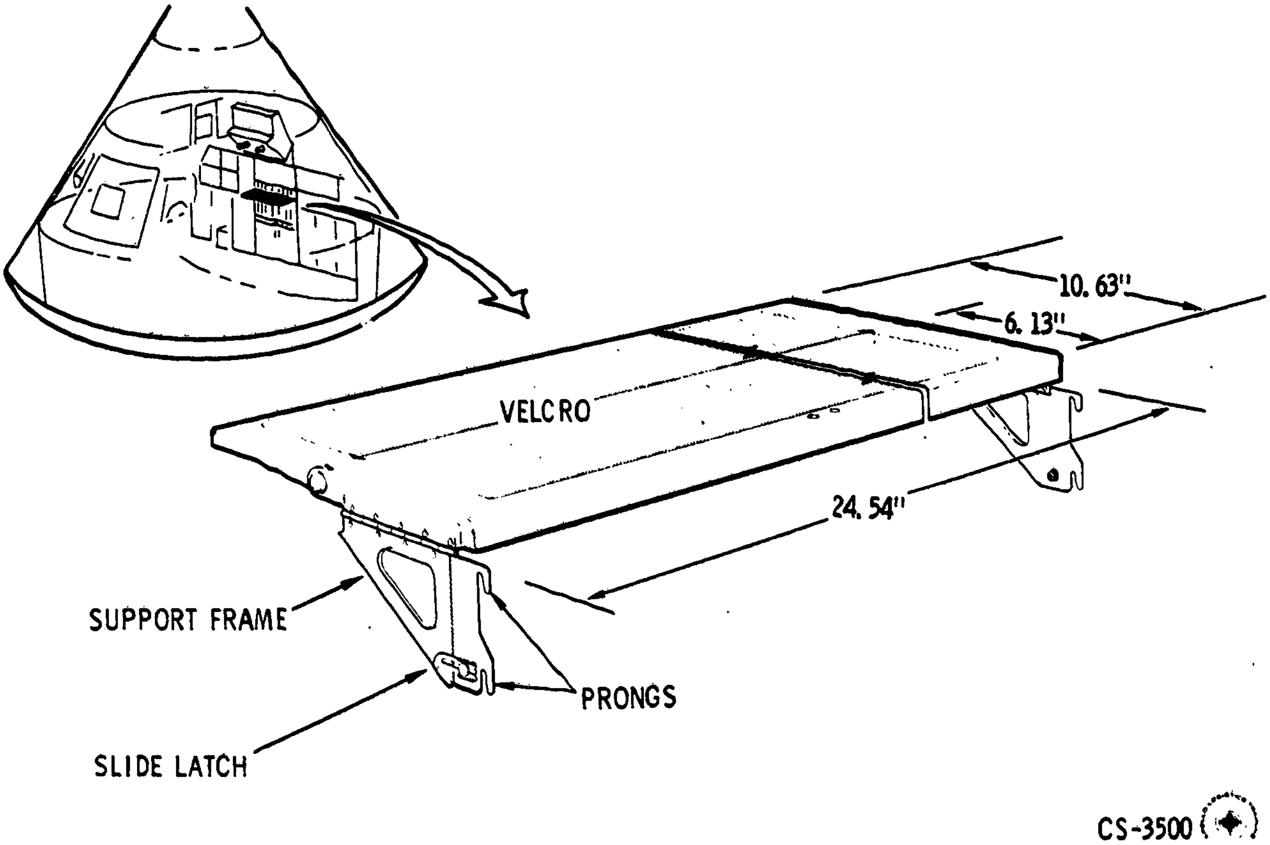

Figure 6-21. Workshelf, Block I

6.10.14.1 Usage.

The workshelf is stored in the lower equipment bay in the tool set drawer next to the flight data file storage. To remove, slide drawer out, lift, and unfold the shelf. Flip the support frames to the extended position and install on the lower bulkhead girth shelf below the G&N equipment by slipping the prongs into the slots. The prongs rest on small pins. Lock the shelf in by actuating the slide latch on each support frame. To remove, reverse the installation process and store.

The food packages and flight data manuals have patches of Velcro pile to interface with the workshelf surface.

6.11 DRINKING WATER SUBSYSTEM. (Figure 6-22)

The source of cold water for drinking is the water chiller. It is the same line that is routed to the cold water tap of the potable water tank. The crewman drinking water line is T'd off, routed through a shut-off valve, to the water dispenser located beneath the main display panel structure. It is handy to the left and center couch positions.

The water dispenser assembly consists of an aluminum mounting bracket, a coiled hose, and a water delivery valve in the form of a pushbutton actuated pistol. The pistol is GFE. It meters one-half ounce portions of water when the pushbutton is pressed. An accumulative counter is also on the side. It has a safety pushbutton to prevent discharge of water when passing the pistol from one crewman to the other. The uncoiled hose will

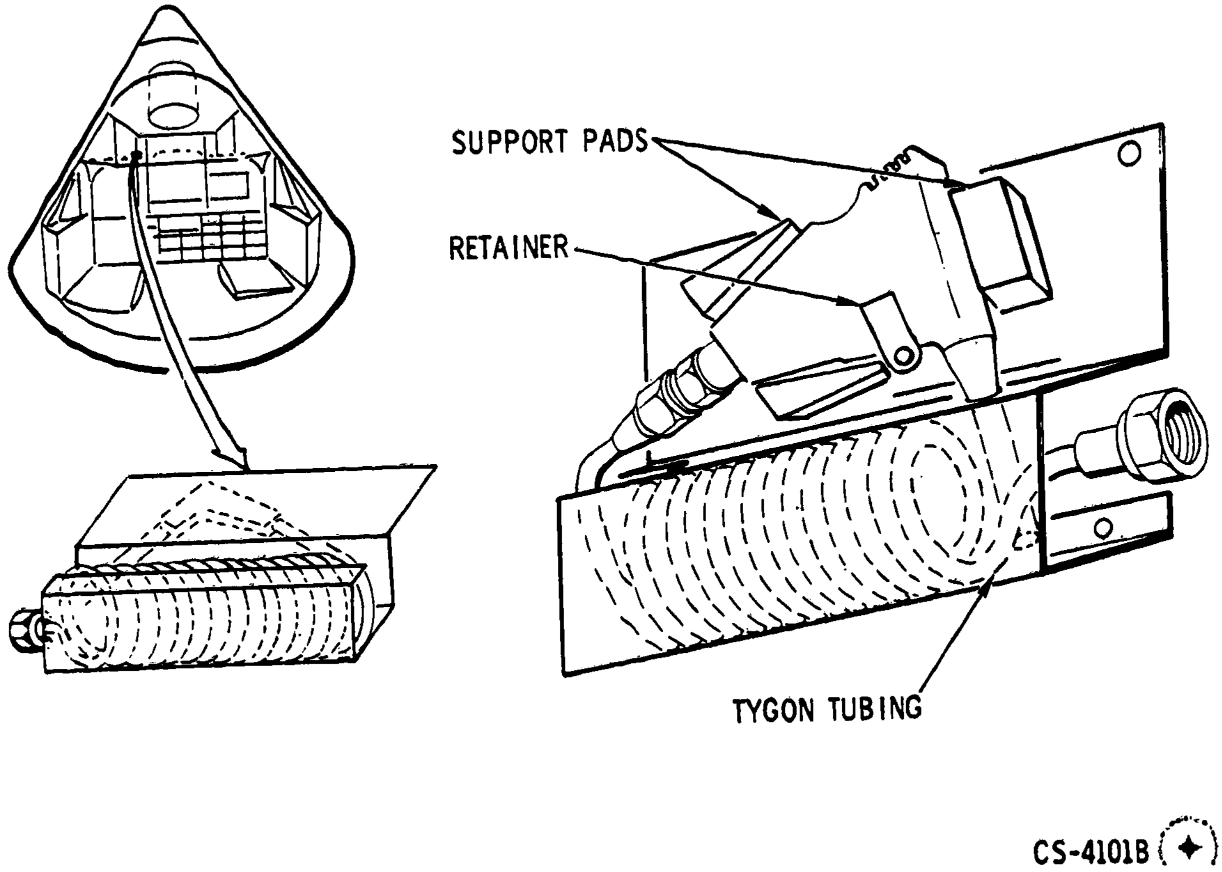

Figure 6-22. Crewman Water Dispenser Assembly

reach 72 inches. When the pistol is returned to the mount, the hose will re-coil into the housing. The pistol is stored in the mounting bracket and is held in place by a retainer.

During orbit, an alternate position is located on the MDC. The pistol is held in place by Velcro tabs.

6.12 FOOD.

The food furnishes a balanced diet of approximately 2650 calories per day to each crewmember. The astronaut's daily requirement for an earth orbital mission is 2650 calories. His daily intake will be 1.2 pounds of food, 6 pounds of water, and 2 pounds of oxygen. He will give off about 2.2 pounds of CO_2.

The food is in many forms such as dehydrated, freeze-dry, and bulk. It consists mainly of a highly nutritious and concentrated food. The food is packaged in plastic bags of a special design to allow food to be vacuum packaged. The food bag has a one-way poppet valve through which the potable water supply nozzle is inserted. The bag has another valve through which the food passes. The food bags are packaged in aluminum foil-backed plastic bags to make one meal for each astronaut. Breakfast, lunch, and snacks will be recycled every 4 days during the mission and the dinner every 8 days. The bags have red, white, and blue dots to identify them for the individual crewman.

6.12.1 USE.

The freeze-dry food is reconstituted by adding hot or cold water through a one-way valve on the food bag neck. It is then kneaded by hand for approximately 3 minutes. When the food is reconstituted, the neck is cut or torn off and placed in the mouth. A squeeze on the bag forces food into the mouth. When finished, a germicide tablet, attached to the bag, is slipped through the mouth piece, an ounce of water added, and the bag shook. The germicide will prevent fermentation and gas. The bag is then rolled as small as possible and returned to the food stowage drawer.

6.12.2 STOWAGE.

Food is stowed in three areas: the food stowage compartment in the lower equipment bay (LEB) on the left hand side, the auxiliary food compartment in the C/U-hand equipment bay (RHEB), and the food stowage compartment in the left-hand equipment bay (LHEB). Combined, they offer approximately 6,006 cubic inches of food storage volume.

6.12.2.1 LEB Food Stowage Compartment.

The food stowage compartment is structurally separate from the CM support structure and contains five bins and five drawers. The combined drawer volume is approximately 3725 cubic inches. The compartment is 23 inches high, 20 inches wide, 23 inches deep, and is constructed as a unit.

The top, bottom, right side, and shelves are 0.25-inch honeycombed aluminum sandwich. The left side is sheet aluminum 0.063-inch thick. The retainer doors are aluminum sheet and hinged at the bottom. The doors are latched at the top with latch bolts that pin into the side support structure.

The food stowage drawers are constructed of 0.020-inch-thick fiberglass: the largest weighs about 26 ounces. The end to be opened has a net closure held in place by Velcro providing easy access when the door is opened.

6.12.2.2 RHEB Auxiliary Food Compartment Drawer.

The auxiliary food compartment drawer is separate from the food stowage compartment and is located on the right-hand equipment bay. The volume is approximately 1000 cubic inches and its dimensions are 29 inches long, 10 inches high, and 10 inches deep.

The auxiliary food compartment drawer is a 3-ply, fiberglass box 0.030 inches thick. The front has a net closure hinged at the bottom and attached at the top by Velcro. It is supported structurally on an aluminum shelf and two sheet aluminum stops in the Z-Z direction. Its rear side fits against the inner structure face sheet. An aluminum door holds the drawer in and gives structural support.

6.12.2.3 LHEB Food Stowage Compartment.

The LHEB food stowage compartment has a volume of 1281 cubic inches. The food stowage drawer is a fiberglass drawer similar in construction to the other food drawers, with a net closure on the front. The drawer rests in the structure and is held in place by a sliding door.

6.13 PERSONAL HYGIENE (GFP). (Figure 6-23)

Personal hygiene items consist of an oral hygiene assembly containing a toothbrush and ingestible gum, wet and dry cleaning cloths, and towels.

6.13.1 CLEANSING OF TEETH - ORAL HYGIENE ASSEMBLY.

An effective method of cleansing teeth is Trident brand chewing gum. It is chewed and then swallowed. One stick is used after each of four meals per day. A stick is approximately 1 by 7/8 inch. To maintain healthy gums, a toothbrush for massaging by brushing is used. The brush also has a rubber prong on the handle for dislodging food particles.

These items are packaged in a one-man module to be used for a 14-day period. The module contains one toothbrush and 28 packs of gum. In each pack, there are two sticks giving a total of 56 sticks per astronaut. The module is stored in the first days food storage drawer to be used for the entire mission.

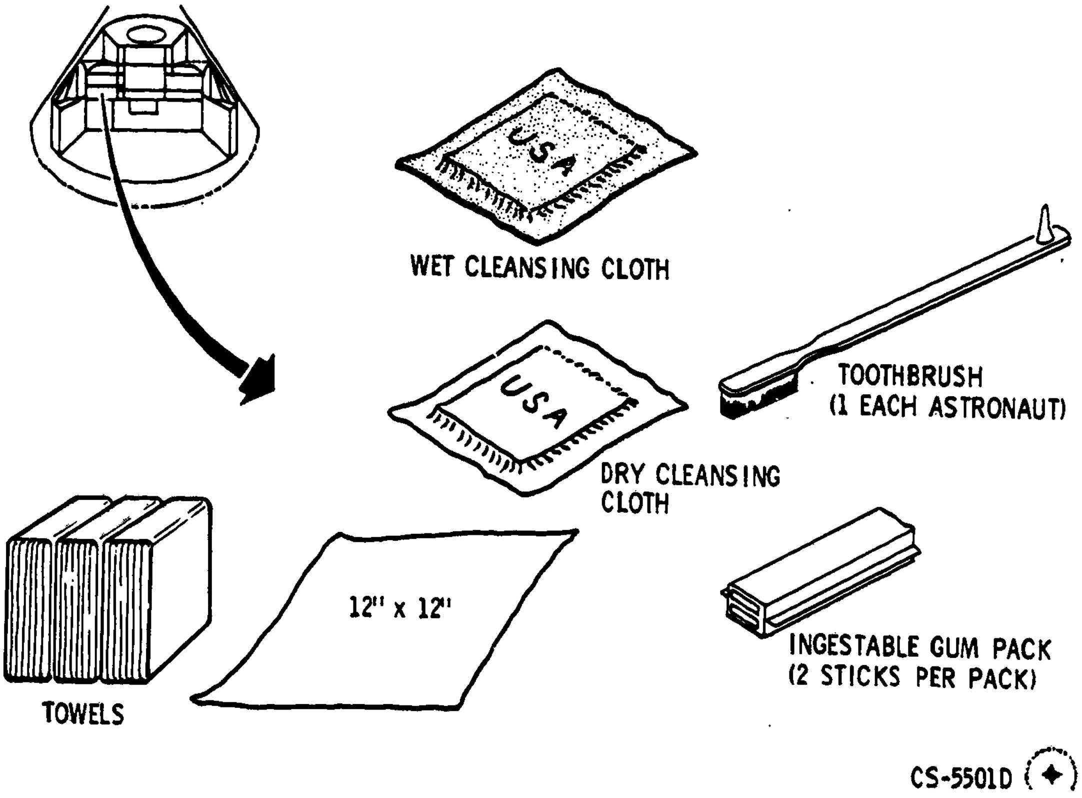

Figure 6-23. Personal Hygiene Items

6.13.2 WET CLEANSING CLOTH.

Wet cleansing cloths will be used for post-meal and post-defecation hygiene. The cloths are 4 by 4 inches folded into a 2-inch square and sealed in plastic. They are saturated with a germicide and water. The cloths for post-meal cleansing are stored, along with the dry cleansing cloth, in the food packages for easy accessibility. The post-defecation cleansing cloths (62 or more) are located in a sanitation supply stowage box.

6.13.3 DRY CLEANING CLOTH.

The dry cleaning cloths will be alternated with the wet cleansing cloths for post-meal cleanup. They are the same size and texture; however, they do not contain water and a germicide. They are also packaged with the food. There are 168 wet and dry cleansing cloths to be placed in the food packages.

6.13.4 TOWELS.

The towels will be used for utility purposes. There are 21, each 12 by 12 inches, and packaged in 3 plastic bags. One bag is stowed on the left couch, and two bags are stowed in the RHEB.

6.13.5 TISSUE DISPENSERS.

The cleansing tissues will also be used for defecation cleanup and utility use. There are nine tissue dispensers, seven are located on the back of the center couch, and two in other areas. They are mounted with Velcro.

6.14 MEDICAL SUPPLIES (GFP).

The medical equipment is used for the following:

- Monitor current physiological condition of the crewmen.
- Furnish medical supplies for treatment of crewman in-flight medical emergencies.

The medical equipment is subdivided into two functional types: monitoring equipment and emergency medical equipment. The monitoring equipment includes the clinical physiological monitoring instrument set, personal biomedical sensors instrument assembly, biomedical preamplifier instrument assembly, and the personal radiation dosimeters. There is also a bioinstrumentation accessories kit for spares. The emergency medical equipment is the emergency medical kit.

6.14.1 MONITORING EQUIPMENT.

6.14.1.1 Clinical Physiological Monitoring Instrument Set.

There is a requirement for periodic measurements of body temperature, blood pressure, heart beat rate, and respiratory rate to be logged by the crewman. This set of instruments will accomplish the measurements. The instruments include the following:

- Individual thermometers for body temperature measurements
- Aneroid sphygmomanometer for measuring blood pressure
- Stethoscope for heart beat measurement.

The physiological monitoring set is stored in the forward medical compartment of the LEB.

6.14.1.2 Personal Biomedical Sensors Instrument Assembly.

Constant monitoring of the heart beat and respiration is required. The sensors assembly automatically and continually senses these functions when the main display panel switch is positioned to the crewman to be monitored. The personal biomedical sensors instrument assembly consists of the following:

- Electrodes (silver silver chloride), 4 or more
- Accessories, such as paste and application tape.

The sensors will be used to gain the following:

- 2 electrocardiographs (ECG)
- Respiration rate.

The sensor assemblies are attached to the body of the astronaut at areas of sparse muscles (to reduce artifact level) by use of paste and tape, and remain throughout the mission.

6.14.1.3 Biomedical Preamplifier Instrument Assembly.

Because of their weak magnitude, the sensor signals have to be amplified before being telemetered. This function is performed by the preamplifiers (or signal conditioners). The preamplifiers are about the size of a cigarette pack and weigh about 100 grams. They operate on a source voltage of 16.8 volts, therefore one dc-dc converter. There are three preamplifiers which are to be used for the following measurements:

- ECG No. 1
- ECG No. 2 or phonocardiograph (uses same preamplifier)
- Respiration rate

The preamplifiers fit into pockets in the constant wear garment, circumferentially around the stomach diaphragm. Wire leads connect to the sensors, which act as electrodes. The sensors act as an electrode for one or more preamplifiers. The difference of resistance between two electrodes is measured. Muscle activity (breathing) changes the skin resistance and this change is measured and sent to the telemetry equipment. One electrode or sensor can be wired to more than one lead for a preamplifier. Each preamplifier will have a lead (to an umbilical) terminating with a connector. The connectors will plug into a larger common umbilical.

6.14.1.4 Bioinstrumentation Accessories Kit.

A kit of spares and possible use for additional scientific experiments will be located in the right-hand equipment bay on the kick ring adjacent to the LEB. The kit will have 35 sensors, 50 micropore discs, 8 wet wipe towels, and 1 tube of electrolyte paste.

6.14.1.5 Personal Radiation Dosimeters.

The crew will wear five passive dosimeters in the form of film packs in the CWG. One crewman will also wear an ionization chamber of the active type in his CWG. Personal dosimeter information will not be telemetered.

6.14.2 MEDICAL KIT (GFP).

The medical supplies are contained in oral drugs, injectable drugs, dressings, topical agents, and an inhaler. The content of the medical kit is as follows:

Oral Drugs

Drug	Use	No. of Tabs
Bismuth subcarbonate	Fever, pain reducer	24
Darvon Compound 65	Fever, pain reducer	12
Globaline	Suppresses infection of gastro-intestinal system	50
Tigan, Bonodoxin, or Marezine	Anti-nauseant (6-man day treatment)	24
Dexedrine	Stimulant	12
Acromycin (250 mg)		24
Elective medication		9

Injectable Drugs

Drug	Use	No. of Units
Morphine Sulphate Demerol	Pain killer	3
Tigan, Bonodoxin, or Marezine	Anti-nauseant	3

Drug is contained in an automatic medical injector

Dressings

Item	Qty Reqd
Elastic bandage or compress (3" x 60")	2
Bandaids (1" x 3")	12

Topical Agents and Inhaler

Item	Use	Qty Reqd
General purpose ointment, antibiotic	Skin irritations	2 (1/2 oz. tubes)
Benzedrex inhaler	Anti-nasal congestant	1

6.14.2.1 Packaging.

The medical kit is in a single package, accessible at all times during the mission. The package is approximately 4 by 5-1/2 by 4 inches and weighs 2.1 pounds.

6.14.2.2 Storage. (Figure 6-24)

The medical kit will be stowed on the back of the left couch lower leg support.

6.14.2.3 Medical Kit Additional Usage.

In the event the astronauts have to evacuate the command module during the recovery phase, the medical kit will be detached from the couch and carried by an astronaut.

6.15 SURVIVAL KIT (GFP).

There are two survival kits with three packages in each. One package contains three rafts; the other package contains water and miscellaneous survival equipment. They are readily accessible from the right-hand forward equipment bay by the right-hand seat occupant. The kits and containers weigh approximately 70 pounds. In addition to the survival kit, a sea water pump is provided. The pump is used after splashdown if the crew requires water and the onboard supply is exhausted.

6.15.1 STOWAGE.

The kits and the sea water pump are stowed in the right-hand forward equipment bay. They are inserted into the structural framework from the bottom and held in place by a quick-release bar retainer.

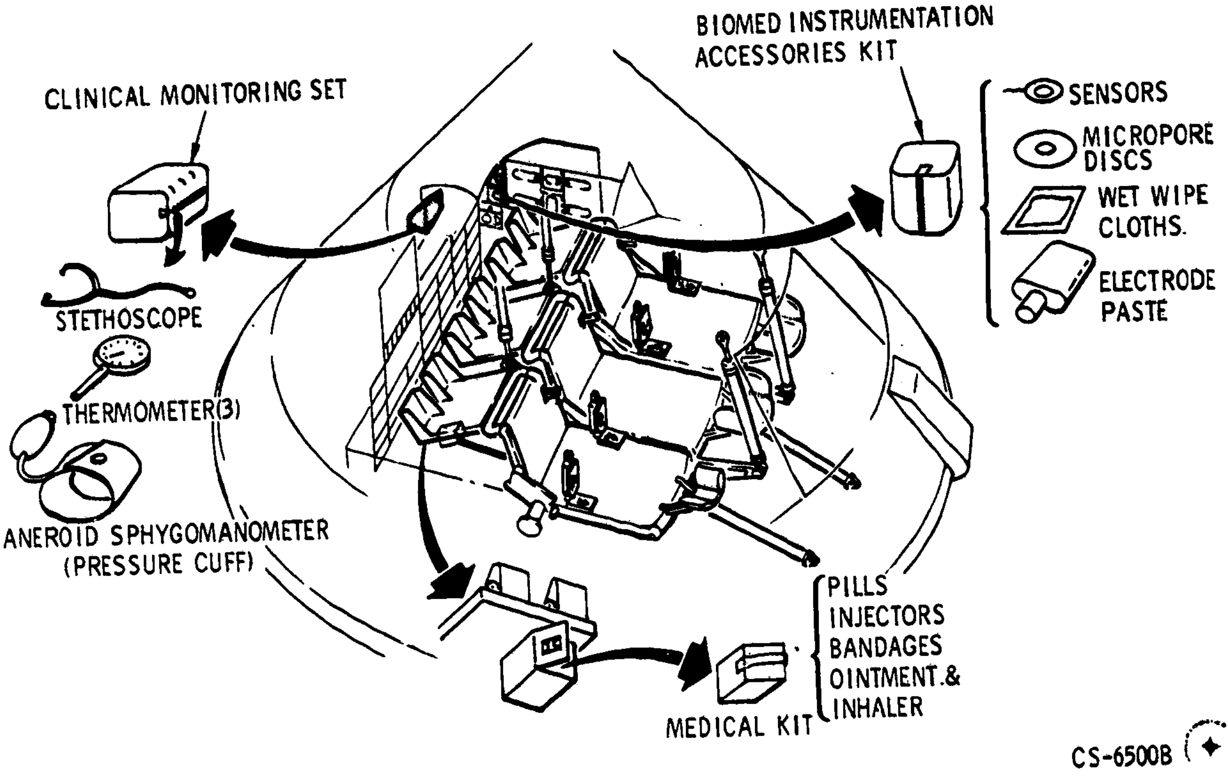

Figure 6-24. Medical Supplies and Equipment C/M Locations

The individual kits are contained in fiberglass boxes called a survival provisions container assembly (hereafter called a container). Thickness varies from 0.040 inch to 0.070 inch, and varies in ply from 4 to 7; a ply being 0.101 inch. One end is a cover and is attached by a breakaway hinge and locked close by a hinge and pin assembly. The cover has Dacron webbing straps that act as a handle. The weight and volumes are as follows:

Container	Weight	Volume
No. 1	5 pounds	0.90 cubic feet
No. 2	4.25 pounds	0.85 cubic feet

6.15.2 SURVIVAL KIT CONTAINER OPERATION.

After impact, and if the CM is damaged or sinking, it has been determined by the crew commander to evacuate, the pilot will release the survival containers by pulling a ring on the bar retainer. He will hand a container to each of the other astronauts. Two astronauts must retrieve the flight data mission logs. The side hatch is removed and the astronauts enter the water. In the water, container top is removed by (1) pulling hinge pin completely out and discarding and (2) rotating top against breakaway hinge until it falls off. Reach inside, pull out contents, activate the one-man raft and climb aboard.

6.15.3 CONTENTS OF THE SURVIVAL KITS. (Figure 6-25)

Container No. 1 contains two cloth pouches. One pouch contains three aluminum containers, each with 5 inches of water. The second pouch contains the following:.

Survival radio with battery
Survival radio battery
2 combination survival lights
3 survival glasses
2 survival knives
2 desalting kits with 16 tablets

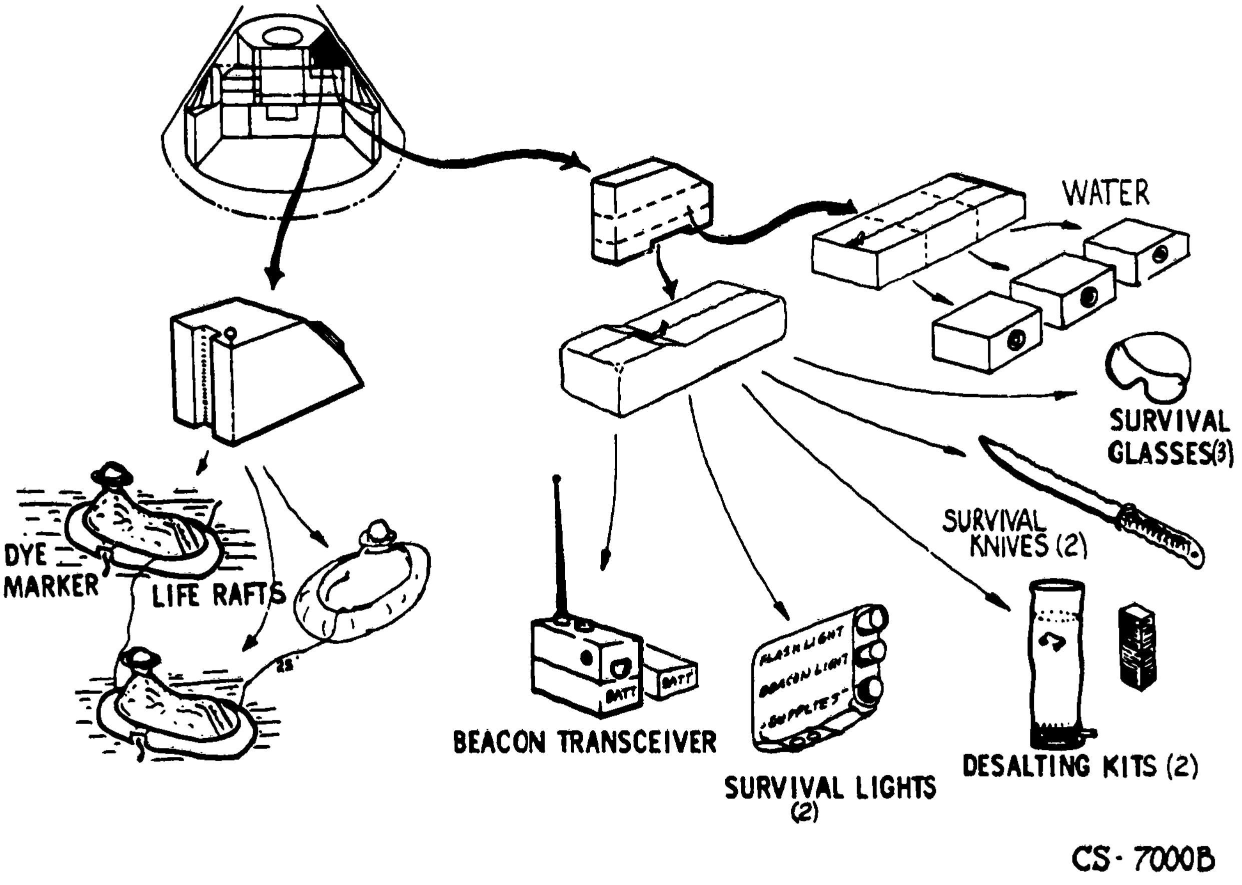

Figure 6-25. Apollo Survival Kit and Components, Block I

Container No. 2 contains one pouch with three one-man liferafts tethered together with 25-foot tethers. The pouches open by use of zippers and have lacings on the bottom to adjust the fit.

6.15.4 DESCRIPTION AND USE OF SURVIVAL KIT COMPONENTS.

6.15.4.1 Liferafts.

The liferafts are of lightweight nylon or mylar and inflated with CO_2. Each has a sea anchor, sponge pad, sun bonnet, tether, and sea dye marker.

6.15.4.2 Beacon/Transceiver.

The UHF beacon/transceiver is a hand-held, battery-powered radio, fixed-tuned to a VHF frequency of 243 mc and manufactured by Sperry Phoenix Company. The radio consists of a receiver-transmitter assembly, a battery pack assembly, and a quarter-wave antenna (figure 6-26). The receiver-transmitter assembly and battery pack assembly mate to form a watertight unit measuring 8 by 4-1/2 by 3 inches. The antenna is an 11-1/2-inch-long tapered, flexible steel tape, terminating in a coaxial RF connector, and is normally stored in a retaining spool and clip on top of the radio unit.

The radio is capable of line-of-sight operation in either of two modes (beacon or voice) through use of either its own antenna or a suitable

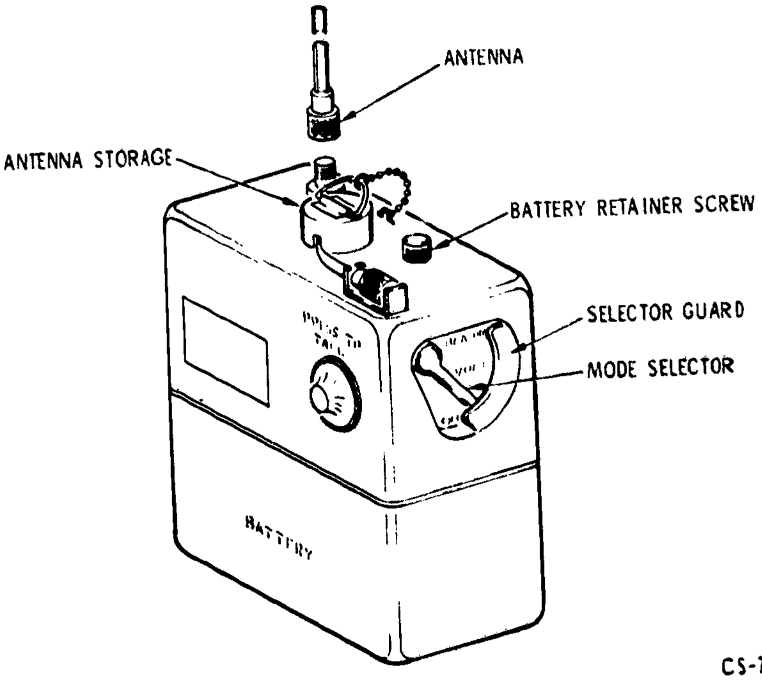

Figure 6-26. Survival Beacon/Transceiver Radio

connected remote antenna. The transmitter output is protected against damage while operating due to accidental shorting of the antenna or submergence of the unit in salt water. In the beacon mode, the transmitter operates unattended, for periods up to 24 hours, to transmit an interrupted 1000 cps tone, amplitude-modulated 25 percent on the 243 mc RF carrier. In the voice mode, the radio provides two-way AM voice communication through use of an integral speaker-microphone and push-to-talk switch. An extra battery is included in the pouch.

The following is a summation of the operating characteristics:

Characteristic	Voice Mode	Beacon Mode
Average power output	1.2 watts into a 50-ohm resistive load	2 watts into a 50-ohm resistive load
Frequency	243 mc carrier. 300 to 3000 cps voice signal	243-mc carrier, 1000-cps signal
Modulation	90-percent maximum	25 percent
Duty cycle	Continuous when PUSH-TO-TALK switch is pressed	2 seconds on 3 seconds off
Receiver sensitivity	10 db signal plus noise-to-noise ratio with 7.5 microvolts signal on antenna	

6.15.4.3 Survival Lights (2).

The survival light is a three units in one device as it contains three compartments. The whole device is waterproof. The controls for the light are on the bottom.

The first unit is a flashlight. The second unit is a strobe light for night signaling. The third unit is a waterproof compartment containing a fish hook and line, a "sparky" kit (striker and pith balls), needle and thread, and whistle. The top of the unit is a compass and on one side is a signal mirror that folds flat to the case.

6.15.4.4 Survival Glasses (3).

For protection of the eyes against the sun and glare, three survival glasses are included. They are a polarized plastic sheet with Sierra Coat III, a gold coating that reflects heat and radio waves.

6.15.4.5 Survival Knives (2).

The survival knives are protected with a cloth sheath. The knives are very thin with razor edges. The back edge is a saw.

6.15.4.6 Water Cans (3).

One pouch contains three aluminum water cans, one for each crewman. The cans have a drinking valve and hold 5 pounds of water.

6.15.4.7 Desalting Kits (2) Plus Tablets (16).

The desalting kits are plastic bags with a filter at the bottom. Approximately one pint of water is put in the bag and one tablet added. The water is desalted after approximately one hour.

6.15.4.8 Emergency Medical Survival Kit.

In the event the medical kit cannot be retrieved before egress, an emergency medical survival kit is in the survival kit. It contains 6 band-aids, 6 injectors, 30 tablets, and one tube of all purpose ointment.

6.15.5 SEA WATER PUMP (CFE). (Figure 6-27)

The pump assembly contains an intake check valve, a discharge check valve, and a 3-inch-diameter bellows, which is operated by means of a fingerhold and extends 1-1/8 inches from a 2/5-inch compressed thickness.

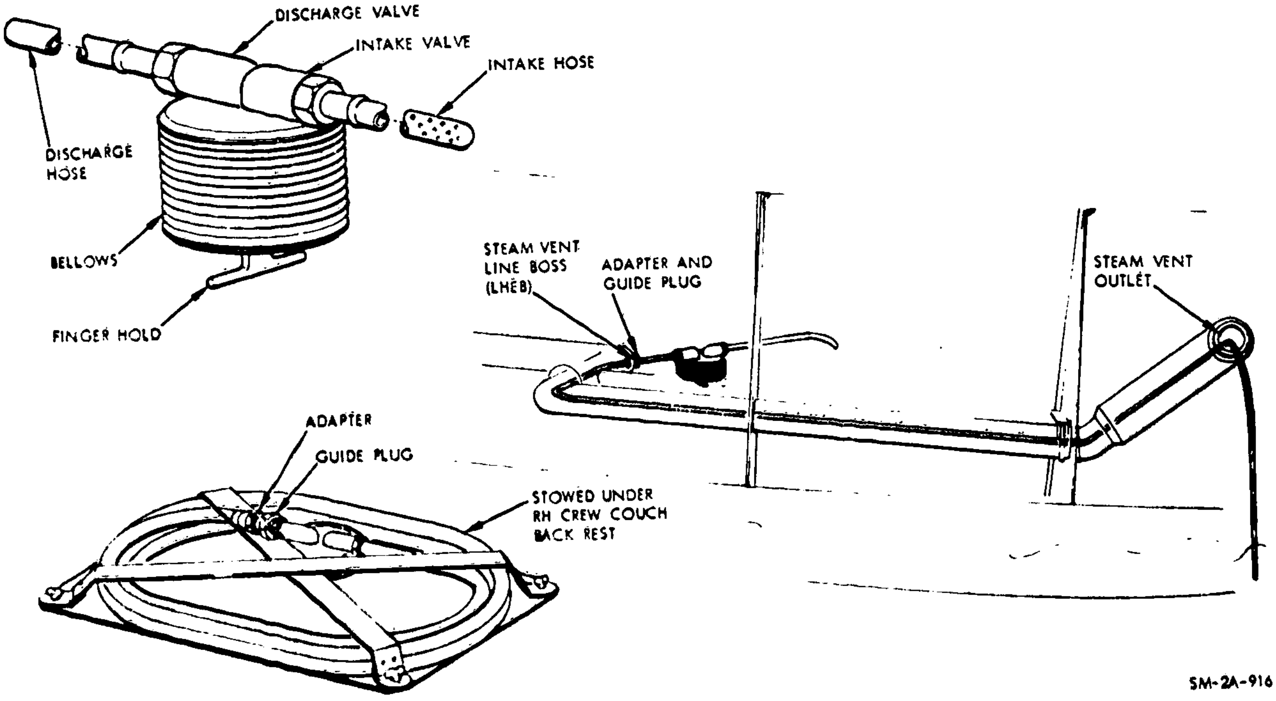

Figure 6-27. Sea Water Pump

A 10-foot-long plastic hose, fitted with a guide plug and an adapter, is attached to the intake valve; a 1-foot-long hose is attached to the discharge valve. To use the pump, the plug is removed from the steam vent hose located just forward of the aft bulkhead in the LHEB; the adapter on the intake hose is threaded into the boss; and the perforated end of the intake hose is fed through the guide plug into the steam vent, along the vent about 5 feet to the vent outlet, and through the outlet into the sea. The guide plug is then tightened into the adapter to form a seal around the hose, and the bellows is extended and compressed to pump water from the short discharge hose into the desalting kit bag. The pump is packaged in a semiflexible plastic container and stowed on the backside of the RH couch position legrest.

6.16 STOWAGE.

The numerous activities of the crew make housekeeping very important. All loose equipment must be stowed during launch and boost. Prior to entry, loose equipment must be stowed for entry and landing. Figure 6-28 defines S/C 012 stowage locations for equipment.

SECTION 7

SYSTEM SCHEMATICS

NOTE This section will contain a brief description of each system, utilizing charts, flow diagrams, and schematics. Information for this section will be provided at a later date by MSC.

Sections 8 through 11 will be submitted at a later date.

APPENDIX A

SYMBOLS AND DEFINITIONS

AB	Aft bulkhead
A/C	Audio center
ACCEL	Accelerometer
ACCUM	Accumulator
ACE	Acceptance checkout equipment
ACK	Acknowledge
ADA	Angular differentiating accelerometer
ADAP	Adapter
ADJ	Adjust
AESB	Aft equipment storage bay
AF	Audio frequency
AF	Atmospheric flight
AGAA	Attitude gyro accelerometer assembly
AGC	Apollo guidance computer
AGC	Automatic gain control
AGCU	Attitude gyro coupling unit
AM	Amplitude modulation
AMPL	Amplifier
AMS	Apollo mission simulator
ANAL	Analyzer
ANLG	Analog
ANT	Antenna
ASD	Apollo standard detonator
ASD	Astrosextant door
ASI	Apollo standard initiator
AS/GPI	Attitude set/gimbal position indicator
ATT	Attenuator
ATT	Attitude
AUTO	Automatic
AUX	Auxiliary
AVC	Automatic volume control
BAT	Battery
BCD	Binary coded decimal
BCN	Beacon
BECO	Booster engine cutoff
BIOMED	Biomedical
BLWR.	Blower
BMAG	Body-mounted attitude gyro
BPC	Boost protective cover
bps	Bits per second
Btu	British thermal unit
BUR	Backup rate
BURR	Backup rate roll
BURP	Backup rate pitch
BURY	Backup rate yaw
$CA (OH)_2$	Calcium hydroxide
CAUT/WARN	Caution and warning
cb	Circuit breaker
cc	Cubic centimeter
CCW	Counterclockwise
CDU	Coupling display unit
CF	Coasting flight
CFE	Contractor-furnished equipment
cfm	Cubic feet per minute
CG	Center of gravity
CHGR	Charger
CIR & SEP	H_2 circulation, water separation centrifuge, and glycol circulation
C/M	Command module
CMD	Command
C/M RCS	Command module reaction control system
COAS	Crewman optical alignment sight
COMP	Compressor
COMP	Computing
COMPR	Compressor
COND	Condenser
COND	Conditioner
CONT	Control
CO_2	Carbon dioxide
CPC	Coldplate clamp

cps	Cycles per second
CYRO	Cryogenic
CSM	Command and service module
CSS	Computer subsystem
CTE	Central timing equipment
C/W	Caution and warning
CW	Clockwise
CW	Continuous wave
C&WS	Caution and warning system
db	Decibel
DISP/AGAA/ECA	Display and attitude gyro accelerometer assembly electronic control assembly
DDP	Data distribution panel
DECR	Decrease
DEMOD	Demodulate
DET	Detector
DISCH	Discharge
DPST	Double-pole single-throw
DSE	Data storage equipment
DSIF	Deep space instrumentation facility
DSKY	Display and keyboard
ECA	Electronic control assembly
ECO	Engine cutoff
ECS	Environmental control system
ECU	Environmental control unit
EDS	Emergency detection system
EEG	Electroencephalogram
E_{ig}	Voltage-inner gimbal
EKG	Electrocardiogram
ELS	Earth landing system
ELSC	Earth landing system controller
EMERG	Emergency
E_{mg}	Voltage-middle gimbal
EMS	Entry monitor subsystem
ENC	Encode
ENG	Engine
E_{og}	Voltage-outer gimbal
EPS	Electrical power system
ESS	Essential
EVA	Extravehicular activity
EVAP	Evaporator
EVL	Egocentric visual localization
EXH	Exhaust
F	Fuel
F/C	Fuel cell
FCSD	Flight Crew Support Division (MSC)
FCSM	Flight combustion stability monitor
FDAI	Flight director attitude indicator
FLSC	Flexible linear-shaped charge
FM	Frequency modulation
FOV	Field of view
FQR	Flight qualification recorder
FWD	Forward
g	Gravity
GFAE	Government-furnished airborne equipment
GFE	Government-furnished equipment
GFP	Government-furnished property
GLY	Water-glycol
GMBL	Gimbal
GMT	Greenwich mean time
G&N	Guidance and navigation
GN_2	Gaseous nitrogen
GSE	Ground support equipment
g/v	Gravity vs velocity
HBR	High-bit rate
He	Helium
HEX	Hexagonal
HF	High frequency
HI	High
HT EXCH	Heat exchanger
H_2	Hydrogen
H_2O	Water
HTRS	Heaters
ICDU	Inertial coupling display unit

ICS	Intercommunication system
IGN	Ignition
IMU	Inertial measurement unit
INCR	Increase
IND	Indicator
INSTR	Instrumentation
INT	Interphone
INV	Inverter
ips	Inches per second
IRIG	Inertial rate integrating gyroscope
ISOL	Isolation
ISS	Inertial subsystem
I/U	Instrument unit
JETT	Jettison
kbps	Kilobits per second
kc	Kilocycle
kmc	Kilomegacycle
KOH	Potassium hydroxide
lb/hr	Pounds per hour
lb min	Pounds per minute
LBR	Low-bit rate
LCC	Launch control center
LEB	Lower equipment bay
LM	Lunar module
LES	Launch escape system
LET	Launch escape tower
LH	Left-hand
LHEB	LH equipment bay
LHFEB	LH forward equipment bay
LIQ	Liquid
LLOS	Landmark line of sight
LO	Low
LOR	Lunar orbit rendezvous
LOS	Line of sight
LTG	Lighting
LV	Launch vehicle
MA	Master
MAN	Manual
MANF	Manifold
MAX	Maximum
mc	Megacycles
mcs	Megacycles per second
MCT	Memory cycle-time
MDC	Main display console
MED	Medium
MESC	Master events sequence controller
MGMT	Management
MIN	Minimum
MMH	Monomethylhydrazine (fuel)
mmHg	Millimeters of mercury
MN A	Main bus A
MN B	Main bus B
MSC	Manned Spacecraft Center (NASA) (Clear Lake, Texas)
MSD	Monitor selection decoder
MDF	Mile detonating fuse
MSFN	Manned space flight network
MSL	Mean sea level
MSM	Monitor selector matrix
MTRS	Motors
MTVC	Manual thrust vector control
MULTI	Multiplexer
N/A	Not applicable
NB	Navigational base
NCS	Navigator communication station
NON ESS	Nonessential
NRZ	Nonreturn to zero
N_2	Nitrogen
N_2H_4	Hydrazine (fuel)
N_2O_4	Nitrogen tetroxide (oxidizer)
OCDU	Optics coupling display unit
OL	Overload
OMNI	Omnidirectional
OSC	Oscillator
OSS	Optics subsystem
OX	Oxidizer
OXID	Oxidizer
O_2	Oxygen
PA	Power amplifier
PAM	Pulse amplitude modulation

PART	Partial
PCM	Pulse-code modulation
PCVB	Pyro continuity verification box
PECA	Pitch electronic central assembly
PF	Powered flight
PGA	Pressure garment assembly
PGNS	Primary guidance and navigation system
pH	Alkalinity to acidity content (hydrogen ion concentration)
PIP	Pulsed integrating pendulous (accelerometer)
PIPA	Pulsed integrating pendulous accelerometer
PKG	Package
PL	Postlanding
PLSS	Portable life support system
PLV	Postlanding ventilation
PM	Phase modulation
PMP	Premodulation processor
POT	Potable
PP	Partial pressure
pps	Pulses per second
PRESS	Pressure
PRF	Pulse repetition frequency
PRI, PRIM	Primary
PRN	Pseudo-random noise
PROG	Program
PROP	Propellant
PRR	Pulse repetition rate
PSA	Power and servo assembly
psi	Pounds per square inch
psia	Pounds per square inch absolute
psid	Pounds per square inch differential
psig	Pounds per square inch gauge
PTT	Push-to-talk
PU	Propellant utilization
PUGS	Propellant utilization and gauging subsystem
PWR	Power
PYRO	Pyrotechnic
QTY	Quantity
RAD	Radiator
RBC	Red blood cell
RCS	Reaction control system
RCSC	Reaction control system controller
RCVR	Receiver
REC	Receive
RECA	Roll electronic control assembly
RECT	Rectifier
RECY	Recovery
REG	Regulator
RESVR	Reservoir
REV	Reverse
RF	Radio frequency
RGA	Rate gyro assembly
RH	Right-hand
RHEB	RH equipment bay
RHFEB	RH forward equipment bay
RLSE	Release
RLY	Relay
RMT, RMTE	Remote
RNG	Range
R/R	Remove and replace
RTC	Real-time commands
RUPT	Interrupt
RZ	Return to zero
S-	Saturn stage (prefix)
S/C	Spacecraft
SCE	Signal conditioner equipment
SCIN	Scimitar-notch
SCS	Stabilization and control system
SCT	Scanning telescope
SEC	Secondary
SECS	Sequential events control system
SENSE	Sensing
SEP-	Separation
SEP	Space electronic package
SEQ	Sequencer
SHA	Sidereal hour angle
SIG	Signal

APPENDIX A

SIG COND	Signal conditioner
SLA	Spacecraft lunar-excursion-module adapter
SLOS	Star line of sight
S/M	Service module
SMJC	Service module jettison controller
S/M RCS	Service module reaction control system
SNSR	Sensor
SOV	Shutoff valve
SPDT	Single-pole double-throw
SPL	Sound pressure level
SPS	Service propulsion system
SPST	Single-pole single-throw
SQG	Sequencer generator
SSB	Single sideband
Sw	Switch
SXT	Sextant
SYNC	Synchronize
SYS	System
TBD	To be determined
T/C	Telecommunications
TC	Transfer control
TEC	Transearth coast
TEMP	Temperature
TFL	Time from launch
TK	Tank
TLC	Translunar coast
TLM, T/M	Telemetry
T/R	Transmit/receive
TTE	Time-to-event
TV	Television
TVC	Thrust vector control
TWR	Tower
UDL	Up-data link
UDMH	Unsymmetrical dimethyl hydrazine (fuel)
UHF	Ultra high frequency
UPTL	Up-link telemetry
USBE	Unified S-band equipment
USBS	Unified S-band system
USM	Service module umbilical
UV	Undervoltage
UVMS	Urine volume measurement system
VAC	Volts ac
VCO	Voltage controlled oscillator
VDC	Volts dc
VHF	Very high frequency
VOX	Voice-operated relay
V/V	Valve
WMS	Waste management system
XDUCER	Transducer
XFMR	Transformer
XMTR	Transmitter
XCVR	Transceiver
XPONDER	Transponder
YECA	Yaw electrical control assembly
Zn	Zinc
ΔP	Change in pressure
ΔV	Change in velocity, differential velocity
ϕ	Phase